SIGMA 2 TYPE 2



2023726 B
03.2013

CE0086

AS/NZS1716 : 2012 - Respiratory Protective Devices
Lic 5021 BSI Benchmark

SCOTT SAFETY

Please Read Carefully and Fully Understand

This manual is for use by personnel trained in the use and care of compressed air breathing apparatus, and MUST NOT be used as a self-teaching guide by untrained users. Failure to understand or adhere to the **SIGMA 2 TYPE 2** User Instructions may result in injury or death.

Scott Safety has taken great care to ensure that the information in this manual is accurate, complete and clear. However, **Training and Technical Support Services** will be pleased to clarify any points in the manual and answer questions on **Scott Safety** breathing apparatus.

The following warnings are in accordance with certifying authority requirements and apply to the use of breathing apparatus in general:

⚠ **Breathing apparatus users must be fully trained in the use and care of self-contained, compressed air breathing apparatus.**

⚠ **Ensure that the selection of the apparatus type is sufficient for the tasks being undertaken and the hazards likely to be encountered. Please refer to National Regulations for guidance.**

⚠ **In order to ensure the optimum performance and user safety, the apparatus must be tested and serviced in accordance with the notes in 'Personnel Training and Servicing' and 'Scheduled Maintenance'.**

⚠ **The quality of air used to supply and charge breathing apparatus must meet the requirements of EN 12021 : 1999. See 'Breathable Air' for details.**

⚠ **The wearing of beards, side-burns or spectacles may adversely affect the sealing of a facemask to the wearer's face.**

⚠ **The apparatus is not designed for use underwater.**

⚠ **The harness must not be used as a vehicle seat restraint.**

DISCLAIMER

Failure to follow these instructions or misuse of the apparatus may result in: death, injury or material damage; and invalidate any warranty or insurance claims.

COPYRIGHT

This manual must not be copied in part or in whole, or used for purposes other than its intended purpose without the written permission of **Scott Safety**.

NOTIFICATIONS FOR BREATHING APPARATUS

IMPORTANT

SIGMA 2 TYPE 2 must be serviced in accordance with the Servicing Schedule on at least an annual basis. Please refer to notes under Servicing.

These instructions for the use, care and maintenance of the apparatus must be followed to ensure the correct and safe operation of **SIGMA 2 TYPE 2**.

For any enquiries regarding the use of **Scott Safety** breathing apparatus, please contact **Training and Technical Support Services** at **Scott Safety.**

BREATHABLE AIR

Air used to supply or charge breathing air may be natural or synthetic and must comply with EN 12021 : 1999 or AS/NZS 1715 : 1994.

The water content shall not exceed 50 mg/m^3 for 200 bar apparatus and 30 mg/m^3 for 300 bar apparatus

APPARATUS DURATION

All durations quoted are nominal, based on an Average Wearer Consumption Rate of 40 litres/minute and FULLY CHARGED cylinders. Actual Wearer Consumption rates vary due to many factors, such as:

Workload: high work rates increase consumption rates.

Weight of apparatus and use of heavy or restrictive clothing.

Work environments with extremes of heat or cold.

Physical fitness of the wearer.

Other factors include emotional stress and fatigue.

It is important that all wearers are aware of these factors and take account of them when assessing cylinder duration.

PERSONNEL TRAINING

Personnel who use self-contained, compressed-air breathing apparatus must be fully trained in accordance with these instructions and national regulations.

These instructions cannot replace an accredited training course run by fully qualified instructors in the proper and safe use of **Scott Safety** breathing apparatus.

SERVICING

SIGMA 2 TYPE 2 must be serviced at scheduled intervals by personnel who have completed a formal training course and hold a current certificate for servicing and repairing **Scott Safety** breathing apparatus. Details of the servicing schedule are contained in the **Scott Safety SIGMA 2 TYPE 2** Service Manual, copies of which can only be obtained by registered holders of a current certificate.

Your distributor or **Training and Technical Support Services** can provide training course details and quotes for service contracts. Please see contact on back for details.

SPARE PARTS AND ACCESSORIES

Our **Customer Services** Department provide an efficient, friendly, customer contact point for ordering new apparatus, spare parts and accessories. The team can also provide general information on **Scott Safety** products.

INTRODUCTION

OVERVIEW

SIGMA 2 TYPE 2 is a self-contained, open circuit, compressed air, positive pressure, breathing apparatus, for use in marine, industrial and fire applications where a high level of respiratory protection is required.

THE **SIGMA 2 TYPE 2** harness is made from a flame-retardant **Kevlar**™ blend.

SIGMA 2 TYPE 2 is approved to the following international standards:

EN137 2006 Including Annex A, Self-contained Breathing Apparatus: type 2 – Fire Fighting

Marine Equipment Directive

AS/NZS 1716

SIGMA 2 TYPE 2 is 'CE' marked in accordance with EEC Directive EC/686/1986 plus amendments

NOTIFIED BODIES

BSI (0086)
Kitemark Court
Davy Ave
Knowlhill
Milton Keynes
MK5 8PP
England

SIGMA 2 TYPE 2 is marked in accordance with EN137 : 2006 and AS/NZS1716 : 2012. An explanation of those markings is given in the following tables:

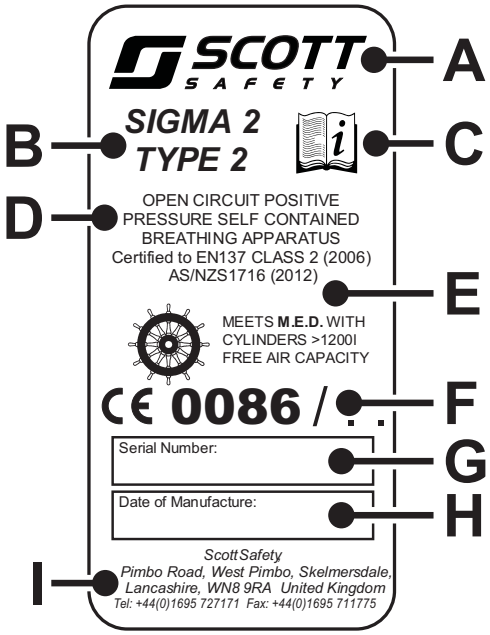

Key	Meaning
A=	Product brand name
B=	Product model/designation
C=	Symbol-refer to User Instructions
D=	Apparatus description
E=	Standards to which apparatus is certified
F=	Number of Approval Body
G=	Serial number of apparatus
H=	Date of manufacture
I=	Contact details of manufacturer

CYLINDER DURATION CALCULATION

Durations are nominal and based on an Average Wearer Consumption Rate of 40 L/min and are for **fully charged cylinders.**

Total Duration = $\dfrac{\text{Cylinder Free Air Capacity}}{\text{Average Wearer Consumption Rate}}$

Nominal Duration = Total Duration minus the Warning Period

Warning Period = $\dfrac{\text{Cylinder Water Capacity x Whistle Operating Pressure}}{\text{Average Wearer Consumption Rate}}$

FACEMASKS

SIGMA 2 TYPE 2 is approved for use with: **Vision 3, PanaSeal, PanaVisor** and **Promask PP** full facemasks, all of which conform to EN 136, Class 3 and AS/NZS1716 : 2012.

All are available with five point, fully adjustable web or net head-harnesses and neck-straps.

An inner mask minimises CO_2 dead space and visor misting. A speech diaphragm is fitted.

PanaSeal is suitable for medium and smaller face sizes. **PanaVisor** is suitable for medium to larger face sizes.

Vision 3 is available in three sizes: small, medium and medium/large which cover most face sizes. **Promask PP** is available in two sizes: small/medium and medium/large.

Vision 3 is moulded in grey silicone, while **PanaSeal** and **PanaVisor** are of non-dermatitic, black neoprene or blue silicone. **Promask PP** is moulded in hypo-allergenic, black **Procomp™** with a soft silicone inner mask.

The polycarbonate visors conform to EN 166 Grade B for medium impact-resistance and AS/NZS 1337: 1992 for high-impact resistance.

Versions of the above masks are also available with helmet attachment clamps fitted. Please contact **Customer Services** for further information.

REDUCER

The combined pressure reducer and cylinder valve connector reduces high air-pressure from the cylinder to a medium pressure of between 5 and 9 bar.

DEMAND VALVE (DV)

The DV operates in conjunction with the facemask spring loaded exhale valve to maintain a positive pressure within the facemask.

The DV has a reset button that enables wearers to close the airflow through the DV, allowing the facemask to be removed without loss of cylinder air.

When the apparatus is donned the DV is normally 'reset' (closed), and is opened (activated) when the wearer takes a first breath.

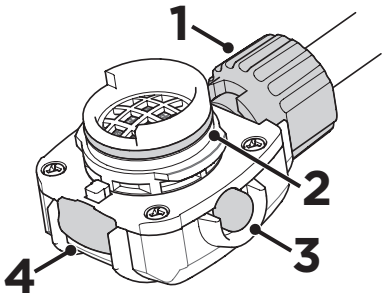

Main components:

1 Reset Button
2 Bypass Knob
3 Locking Catch
4 Outlet Port O-Ring

PRE-USE AND MONTHLY CHECKS

GENERAL

Check that all parts are clean and undamaged.

Ensure that the shoulder harness is fully slackened and that a fully charged cylinder is securely attached to the back-plate. Replace discharged cylinders.

Check that the harness slides freely through buckles.

Check that the facemask visor is clear and free from marks and damage that might impair vision. Fully slacken head-harness straps.

Apparatus that fails any of these checks must be serviced in accordance with the **SIGMA 2 TYPE 2** Service Manual.

PNEUMATICS

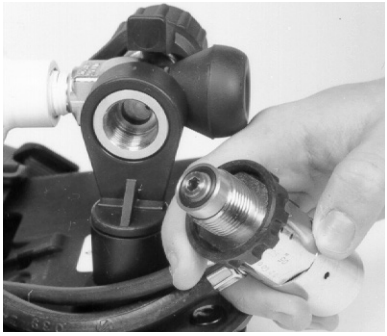

Check cylinder connector O-ring is clean and undamaged.

Screw hand-wheel connector firmly into the cylinder valve outlet.

Check that pressure gauge, whistle and hoses are in good condition and are not kinked or stretched.

DEMAND VALVE

Check that the DV O-ring is clean and undamaged.

Fit the DV to the facemask and check that the locking catch clicks into place. Gently twist the DV to ensure that it is securely fitted.



Check that the bypass valve is closed (flat area on knob is toward the face-piece).



Press the black reset button.

CHECK FACEMASK

Don the facemask.

Open the cylinder valve and check that the cylinder is full.

Check that the facemask pressurises. If necessary adjust the mask to obtain a leak tight fit. DO NOT over-tighten the harness as this distorts the mask.

POSITIVE PRESSURE, BYPASS AND LEAK TEST



Insert fingers in the facemask seal and check there is a steady flow of air out of the mask.

Remove fingers and allow mask to re-seal.



Open the bypass and check there is a steady flow of air into the facemask.

Close the bypass.

Close the cylinder valve, hold your breath, and monitor the pressure gauge for 10 seconds. Check that the reading does not drop during this period.

WHISTLE TEST



With the cylinder valve still closed, monitor the pressure gauge and breathe down air in the system. Check that the whistle sounds clearly at between 50 and 60 bar.

Release head-harness and remove the facemask.

Apparatus that passes all of these checks is now ready for use.

REPLACING CYLINDERS

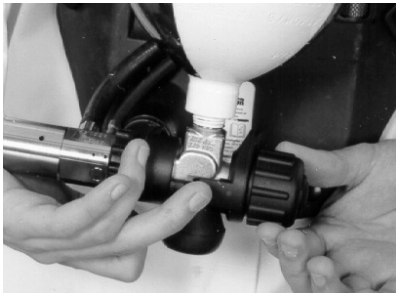

Check that the cylinder valve is closed and slowly undo the cylinder connector hand-wheel. Remove the reducer from the cylinder.

Grasp the sides of the cam-lock buckle with the index finger and thumb of the right hand, use the left index finger to slide back the ribbed catch and lift the buckle.

Open the buckle and lift the empty cylinder from the back-plate.

Fitting a replacement Cylinder of the same size.

Fit the cylinder valve through the cylinder valve retainer, connect the buckle hinge and close the cam-lock.

Fitting a replacement Cylinder of a different size.

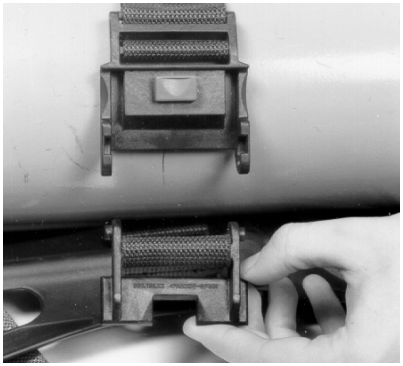

Adjust the length of the cylinder band to permit the buckle hinge to be connected.

Adjust the cylinder band length until the cylinder band grips the cylinder firmly, then close the cam-lock.

Tidy the free end of the cylinder band into the loops.

DONNING PROCEDURE

HARNESS

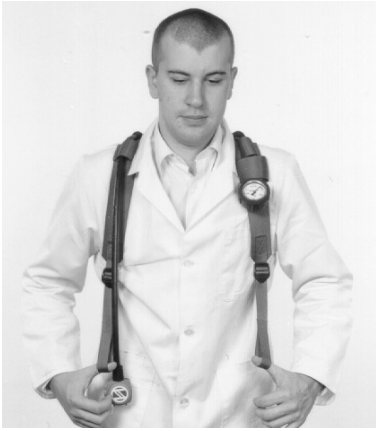

Don apparatus. Adjust shoulder straps for a comfortable fit, then fasten waist-belt and adjust for a snug fit.

DON FACEMASK

Check that the bypass is shut and press the DV reset button).

Head Harness



Let facemask hang loosely from face and breathe normally.



Fit the chin into the chin-cup, pull the harness over the top of the head and tighten the straps in sequence: **bottom, middle, top**. DO NOT over-tighten.

Head-net



With the head-net straps fully extended, insert the chin into the chin-cup and use the loop at the back of the head-net to pull the head-net over the head.

Tighten the top strap to bring the visor and ori-nasal mask to the correct level.



Tighten the side straps for a firm, comfortable fit. DO NOT over-tighten as this distorts the face seal.

OPEN CYLINDER VALVE

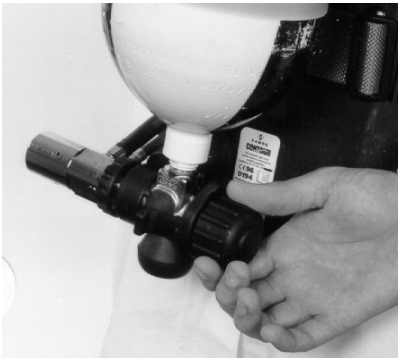

Slowly open cylinder valve fully and inhale sharply to start the air supply to the facemask.

FACEMASK SEAL CHECK



Insert fingers in facemask seal and check for a steady flow of air from the mask. Remove fingers and allow mask to re-seal.

BYPASS CHECK



Open the bypass and check there is a steady flow of air into the facemask.

Close the bypass.

LEAK TEST

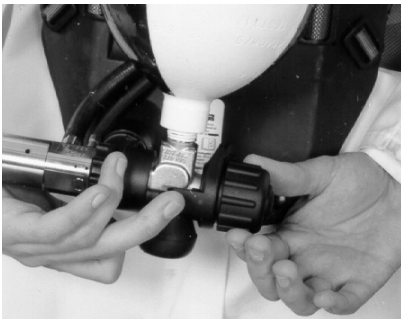

Take a breath and hold it. Release hand-wheel locking-mechanism and close the cylinder valve.

Listen for leaks and monitor gauge for 10 seconds. The reading on the gauge should not fall during this period.

WHISTLE TEST



Slowly breathe down the air from the system and check that the whistle sounds clearly at between 50 and 60 bar.

If the whistle or facemask fail the test, return the apparatus for servicing, with an explanatory note attached, in accordance with the **SIGMA 2 TYPE 2** Servicing Instructions.

CYLINDER PRESSURE

Open cylinder valve and check pressure gauge to ensure that cylinder has a minimum of 80% of the fully charged capacity:

For 200 bar cylinders - 160 bar.

For 300 bar cylinders - 240 bar.

When fully satisfied with apparatus, proceed to undertake tasks as required.

DOFFING INSTRUCTIONS

REMOVE FACEMASK



Take a breath and press the reset button to close the air supply.

Pull tabs on buckles forward to release the head-harness or head-net. Remove facemask.



TURN OFF CYLINDER

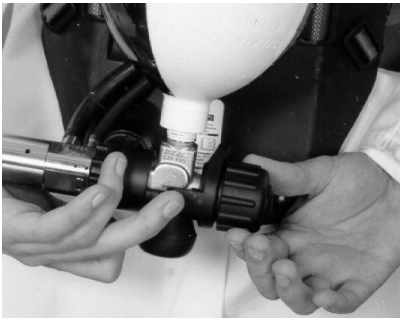

Disengage the cylinder valve hand-wheel locking mechanism and turn hand-wheel fully clockwise to shut the valve.

REMOVE APPARATUS

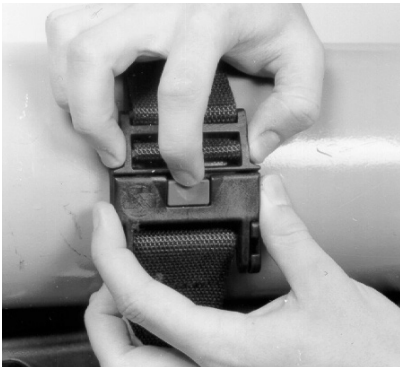

Release the waist-belt, slacken the shoulder straps and remove the apparatus.

Open cylinder band, undo cylinder valve connector and remove cylinder.

Mark cylinder as ‘empty’ and return for charging.

CLEAN AND CHECK APPARATUS

The apparatus must be cleaned and tested in accordance with the instructions given in ‘After Use’, prior to being returned to service.

AFTER USE

CAUTION:

DO NOT immerse DV or warning whistle in water. A yellow cap is provided to protect the DV outlet.

ALWAYS use the recommended cleaning methods.

The apparatus MUST be thoroughly dried prior to storage. Pay particular attention to the valve flaps.

CLEAN FACEMASK



Withdraw red locking catch, turn 90° clockwise and remove the DV from the facemask.

Wash and disinfect the mask thoroughly in a solution of **Distel** and warm water. See following *Note*.

Rinse the mask thoroughly in clean running water. Pay particular attention to flushing out the exhale valve.

Hang mask by its neck-strap and allow it to dry thoroughly away from direct heat or sunlight.

When dry, wipe facemask seals with **Distel** disinfectant wipes.

Polish the visor inside and out with a clean, lint-free cloth and slacken the head harness, ready for use.

Note: Distel Cleansing and Disinfecting Solution is available from **Scott Safety** in 1 litre and 5 litre containers under Article Numbers 2008247 and 2008248 respectively.

Pump dispensers are available for the 5 litre version of the above under Article Number 1017670

Distel Disinfecting Wipes are available from **Scott Safety** in packs of 20 sachets under Article Number 2004225.

CLEAN APPARATUS

CAUTION:

DO NOT use abrasive or solvent cleaners.

Fully slacken the shoulder straps and waist-belt. Clean off any dirt with a stiff brush or sponge with warm water and soap, followed by a thorough rinse.

Ensure that the pressure gauge face is clean.

DEMAND VALVE



Fit the protective yellow cap over the DV outlet and use a small stiff brush with a mild soap and water solution to clean around the catch.

If the catch does not move freely, return the apparatus for servicing.

Check that the orange O-ring on the DV outlet is clean and in good condition.

Replace O-ring if in less than perfect condition.

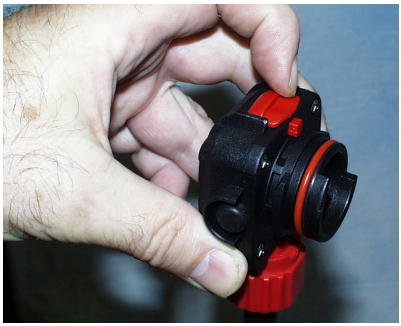

Operate the red locking catch a number of times. Ensure that it moves freely and does not stick.

CHECK APPARATUS

Check apparatus thoroughly for signs of wear or damage.

Check hoses for signs of abrasion or damage.

Check harness straps and stitching for signs of weakness.

Replace worn or damaged components in accordance with the **SIGMA 2 TYPE 2** Service Manual.

If a fault is found, attach an explanatory note to the apparatus and return it for servicing.

FIT FULLY CHARGED CYLINDER

Fit a fully charged cylinder in accordance with the instructions contained within 'Pre-Use and Monthly Checks'.

LEAK TEST

Open cylinder valve. The DV will free flow. Fit yellow protective cap over the DV outlet, airflow will cease.

Check pressure gauge to ensure that the cylinder is full.

Close cylinder valve and monitor the pressure gauge for one minute. Check that the pressure does not drop by more than 10 bar (one gauge division) in this time.

If apparatus fails this test it must be withdrawn from service and returned for servicing.

Gently lift the yellow DV cap and allow air to vent from system. Check pressure gauge and ensure that the warning whistle sounds clearly between 50 and 60 bar.

RECORD TEST DETAILS

Record test details in accordance with local regulations in a breathing apparatus logbook (available from **Scott Safety** under Article Number 1034745).

Information recorded usually includes:

Name and address of employer responsible for the apparatus.

Make, model number or mark of the apparatus, together with a description of any distinguishing features, sufficient to enable clear identification.

The date of the examination together with the name, signature or unique authentication mark of the examiner.

The condition of the apparatus and details of any defects found and any remedial action taken.

Cylinder air pressure.

STORAGE

Device must be protected from damage during transportation.

The apparatus must be stored in a clean, dry environment away from direct heat and sunlight.

Storage temperature should not exceed +40°C to -10°C.

WARRANTY

The products manufactured at our factories in Skelmersdale and Vaasa carry a warranty of 12 months (unless stated otherwise) for parts, labour and return to site. The warranty period runs from the date of purchase by the end user.

These products are warranted to be free from defects in materials and workmanship at the time of delivery. Scott Safety will be under no liability for any defect arising from wilful damage, negligence, abnormal working conditions, failure to follow the original manufacturer's instructions, misuse or unauthorised alteration or repair.
Evidence of purchase date will need to be provided for any claims arising during the warranty period. All warranty claims must be directed through Customer Services and in accordance with our sales return procedure.

SCHEDULED MAINTENANCE

MONTHLY

The apparatus should be examined and tested at least once a month in accordance with the instructions given in this manual under 'Check Apparatus'.

Details of such checks should be recorded within the appropriate register and a copy kept for future inspection. Please see 'Record Test Details' for details.

ANNUALLY

The apparatus must be tested and components replaced in accordance with the **SIGMA 2 TYPE 2** Service Schedule, contained within the **SIGMA 2 TYPE 2** Service Manual. Please refer to notes under 'Personnel Training and Servicing' for further details.

DECLARATION OF CONFORMITY

MARINE EQUIPMENT DIRECTIVE

Scott Health and Safety Limited
Pimbo Road, West Pimbo,
Skelmersdale, Lancashire,
WN8 9RA, England.

declares that the following Personal Protective Equipment:

Sigma 2 Type 2 Self-contained Compressed Air Breathing Apparatus'

Complies with the following Directive EN137 Types 2/2006.

Facemasks approved for use with this product: Panaseal; Vision 3 & Promask PP. All facemasks comply with EN136 1998 and include AC 2003.

Is in conformity with the provisions of Council Directive 96/98 EC on Marine Equipment. Type-Examination Certificate BSI/A.1/3.7/590448 issued by BSI (Notified Body No 0086) relates.

Is in conformity with the provisions of Council Directive 89/686/EC including amendments. Last amended 2010/68/EC. relating to Personal Protective Equipment when assessed against Harmonised Standard BS EN137. Type-Examination Certificate No 566516 issued by BSI Product Services (Notified Body No 0086) relates.

Is manufactured under a Quality Control System which has been satisfactorily assessed against the requirements of Article 11, Section B of Council Directive 89/686/EEC; 96/98 EC MED MODULE D and Production Quality Assurance Module D Certificate BSI/MED/PC/90907 issued by BSI (Notified Body No 0086) relates

Steve Thurgood
Engineering Manager,
Scott Health and Safety Limited.

25th June 2012



Scott Safety
Pimbo Road, West Pimbo,
Skelmersdale, Lancashire,
WN8 9RA, England

www.scottsafety.com
scott.sales.uk@tycoint.com
Tel: +44 (0) 1695 711711
Fax: +44 (0) 1695 711775

© 2011 Scott Safety. All rights reserved. SCOTT, the SCOTT SAFETY Logo, Scott Health and Safety, **Sigma 2 Type 2** are registered and/or unregistered marks of Scott Technologies, Inc. or its affiliates.