INSTRUCTION MANUAL
Detcon Model DM-700



DM-700 Toxic Gas Sensors
DM-700 O_2 Deficiency Sensors

This manual covers all ranges of electrochemical and O_2 deficiency sensors offered in the Detcon Product Line

detcon inc.

DETCON, Inc.
3200 Research Forest Dr.,
The Woodlands, Texas 77387
Ph.281.367.4100 / Fax 281.298.2868
www.detcon.com

September 24, 2008 • Document #3207 • Revision 2.1

This page left intentionally blank

Table of Contents

1. Introduction 1
1.1 Description 1
1.2 Sensor Electronics Design 2
1.3 Modular Mechanical Design 3
1.4 Intelligent Plug-in Electrochemical Gas Sensor 4
2. Installation 5
2.1 ATEX Operational Guidelines for Safe Use 5
2.2 Sensor Placement 5
2.3 Sensor Contaminants and Interference 7
2.4 Mounting Installation 7
2.5 Electrical Installation 8
2.6 Field Wiring 9
2.7 Initial Start Up 11
2.7.1 Toxic Gas Sensors 11
2.7.2 O_2 Deficiency Sensors 12
3. Operation 13
3.1 Programming Magnet Operating Instructions 13
3.2 Operator Interface 14
3.3 Normal Operation 15
3.4 Calibration Mode 16
3.4.1 AutoZero 16
3.4.2 AutoSpan 16
3.5 Program Mode 18
3.5.1 View Sensor Status 19
3.5.2 Set AutoSpan Level 20
3.5.3 Set Serial ID 21
3.5.4 Set Range 21
3.5.5 Signal Output Check 22
3.5.6 Restore Factory Defaults 22
3.6 Program Features 23
3.6.1 Operational Features 23
3.6.2 Fault Diagnostic/Failsafe Features 24
4. RS-485 Modbus™ Protocol 26
5. Service and Maintenance 28
6. Troubleshooting Guide 31
7. Customer Support and Service Policy 34
8. DM-700 Sensor Warranty 35
9. Appendix 36
9.1 Specifications 36
9.2 Interference Table 38
9.3 Spare Parts, Sensor Accessories, Calibration Equipment 44
9.4 Model DM-700 Engineering Drawings 44

Table of Figures

Figure 1 Construction of Electrochemical Toxic Sensor 1
Figure 2 Construction of Galvanic Cell 2
Figure 3 ITM Circuit Functional Block Diagram 2
Figure 4 Sensor Assembly Front View 3
Figure 5 Sensor Assembly Breakaway 3

Figure 6 Intelligent Plug-in Sensor 4
Figure 7 ATEX Approval Label 5
Figure 8 Outline and Mounting Dimensions 8
Figure 9 Typical Installation 9
Figure 10 Sensor Wire Connections 10
Figure 11 Magnetic Programming Tool 13
Figure 12 Magnetic Programming Switches 13
Figure 13 DM-700 Software Flowchart 15
Figure 14 Sensor Assembly 28
Figure 15 Sensor Cell and ITM Mating 29
Figure 16 Sensor Cell and ITM Mating 31

1. Introduction



1.1 Description

Detcon Model DM-700 toxic gas and O_2 deficiency sensors are non-intrusive "Smart" sensors designed to detect and monitor a wide range of toxic gasses in air. Ranges of detection for toxic gasses are from 0-1ppm up to 0-10,000ppm. Ranges for O_2 deficiency are 0-100ppm up to 0-25% by volume. The sensor features an LED display of current reading, fault and calibration status. The Sensor is equipped with standard analog 4-20mA and Modbus™ RS-485 outputs. A primary feature of the sensor is its method of automatic calibration, which guides the user through each step via fully scripted instructions displayed on the LED display.

The microprocessor-supervised electronics are packaged in an encapsulated module and housed in an explosion proof casting, called the ITM (Intelligent Transmitter Module). The ITM includes a four character alpha/numeric LED used to display sensor readings, and the sensor's menu driven features when the hand-held programming magnet is used.

Electrochemical Sensor Technology

The Toxic gas sensors are based on electrochemical cells. Each cell consists of three electrodes embedded in an electrolyte solution all housed beneath a diffusion membrane. Sensitivity to specific target gasses is achieved by varying composition of any combination of the sensor components. Good specificity is achieved in each sensor type. The cells are diffusion limited via small capillary barriers resulting in a long service life of up to three or more years. The electrochemical cell is packaged as a field replaceable intelligent plug-in sensor.

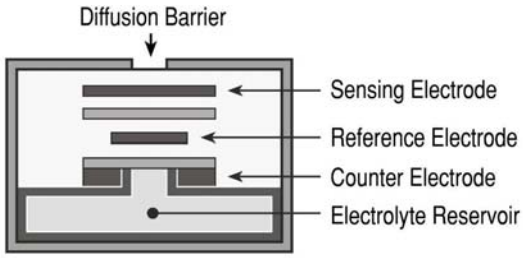

Figure 1 Construction of Electrochemical Toxic Sensor

The O_2 deficiency sensor technology is a two electrode galvanic metal air battery type cell, which is housed as a field replaceable intelligent plug–in sensor. The cell is diffusion limited and functions as a direct current generator proportional to the amount of oxygen adsorption. The sensors are temperature compensated and show good accuracy and stability over the operating temperature range of –20° to 50°C (-4° to +122° Fahrenheit). The sensor is warranted for two years and has an expected service life of up to 2.5 years in ambient air at 20.9% oxygen.

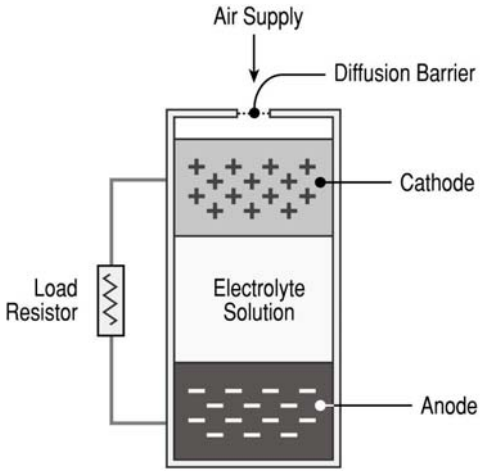

Figure 2 Construction of Galvanic Cell

1.2 Sensor Electronics Design

Intelligent Transmitter Module

The DM-700 Intelligent Transmitter Module (ITM) is a fully encapsulated microprocessor-based package that is universal in design and will accept any Detcon intelligent plug-in electrochemical gas sensor. The ITM design uses an internal intrinsically safe barrier circuit that lifts the requirement for use of flame arrestors to achieve Class 1, Division 1 (Zone1) area classification. This facilitates fast response times and improved calibration repeatability on highly corrosive gas types. The ITM circuit functions include extensive I/O circuit protection, on-board power supplies, internal intrinsically safe barrier circuit, microprocessor, LED display, magnetic programming switches, a linear 4-20mA DC output, and a Modbus™ RS-485 output. Magnetic program switches located on either side of the LED Display are activated via a hand-held magnetic programming tool, thus allowing non-intrusive operator interface with the ITM. Calibration can be accomplished without declassifying the area. Electrical classifications are Class I, Division 1, Groups B C D and Class I, Zone 1, Group IIC.

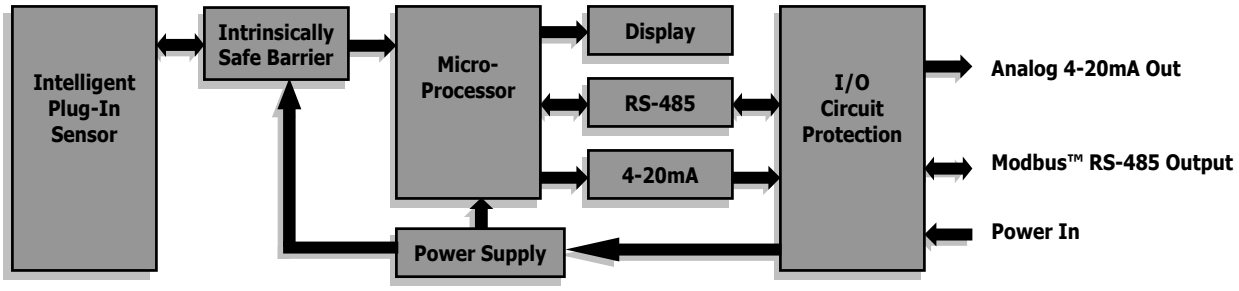

Figure 3 ITM Circuit Functional Block Diagram

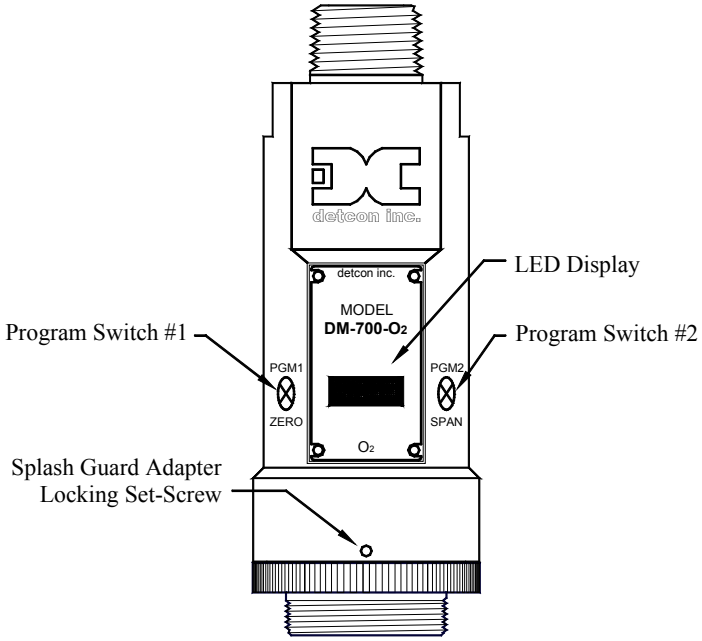

Figure 4 Sensor Assembly Front View

1.3 Modular Mechanical Design

The Model DM-700 Sensor Assembly is completely modular and is made up of four parts (See Figure 5 for Assembly Break-away):

1) DM-700 Intelligent Transmitter Module (ITM)
2) Intelligent Plug-in Sensor (varies by gas type and range)
3) Model DM-700 Splash Guard Adapter
4) Splash Guard.

NOTE: All metal components are constructed from electro polished 316 Stainless Steel in order to maximize corrosion resistance in harsh environments.

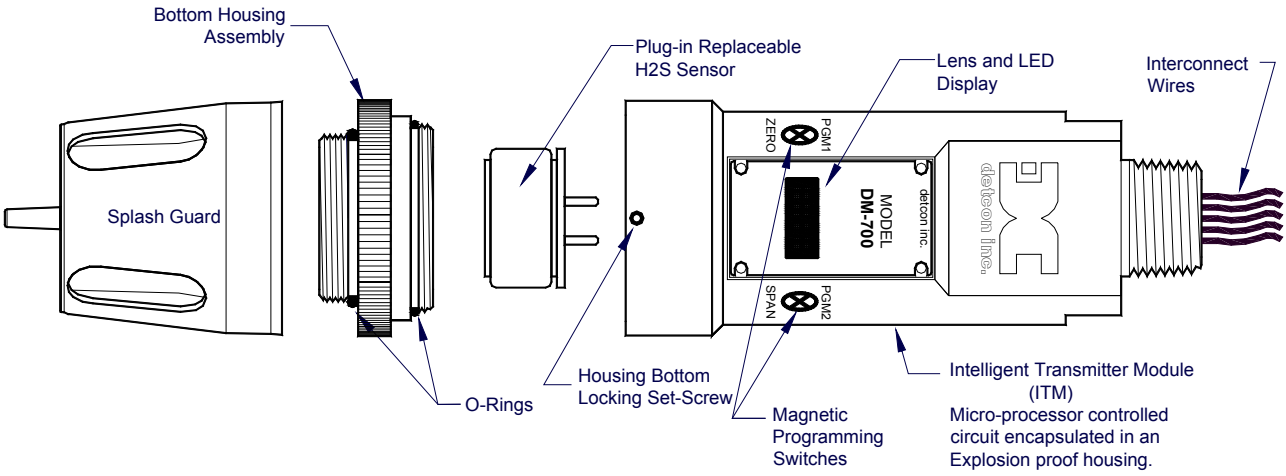

Figure 5 Sensor Assembly Breakaway

1.4 Intelligent Plug-in Electrochemical Gas Sensor

The Detcon family of electrochemical gas sensors are field proven, intelligent plug-in sensors with over-sized gold-plated connections that eliminate corrosion problems. The intelligent design provides automatic recognition of gas type, units, full-scale range, and calibrations data when a new sensor is plugged in. The sensor can be accessed and replaced in the field very easily by releasing the locking setscrew and unthreading the Splashguard Adapter. Detcon's family of toxic sensors have a long shelf life and are supported by an industry-leading warranty.



Figure 6 Intelligent Plug-in Sensor

2. Installation

2.1 ATEX Operational Guidelines for Safe Use

1. Install sensor only in areas with classifications matching with those described on the ATEX approval label. Follow all warnings listed on the label.

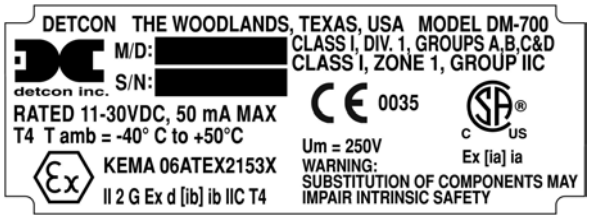

Figure 7 ATEX Approval Label

2. Ensure that the sensor is properly threaded into a suitable explosion-proof rated junction box with a downward pointing female ¾" NPT threaded connection. The sensor should be threaded up at least 5 full turns until tight, with the LED display facing forward. Avoid use of Teflon Tape, or any type of non-conductive pipe thread coating on the NPT threaded connection.

3. A good ground connection should be verified between the sensor's metal enclosure and the junction box. If a good ground connection is not made, the sensor can be grounded to the junction box using the sensor's external ground lug. Also verify a good ground connection between the junction box and earth ground.

4. Proper precautions should be taken during installation and maintenance to avoid the build-up of static charge on the plastic components of the sensor. These include the splashguard and splashguard adapter.

5. Do not substitute components that are not authorized by the scope of the safety approval. This may impair the intrinsic safety rating.

6. Do not operate the sensor outside of the stated operating temperature limits.

7. Do not operate the sensor outside the stated operating limits for voltage supply.

8. The sensor power supply common (black wire) must be referenced to the metal enclosure body (ground) during installation.

9. These sensors meet EN60079-0, EN60079-1, and EN500200.

10. These sensors have a maximum safe location voltage of Um=250V.

11. These sensors pass dielectric strength of 500VRMS between circuit and enclosure for a minimum of 1 minute at a maximum test current of 5mA.

2.2 Sensor Placement

Selection of sensor location is critical to the overall safe performance of the product. Six factors play an important role in selection of sensor locations:

(1) Density of the gas to be detected
(2) Most probable leak sources within the industrial process
(3) Ventilation or prevailing wind conditions
(4) Personnel exposure
(5) Maintenance access
(6) Additional placement considerations

Density

Placement of sensors relative to the density of the target gas is such that sensors for the detection of heavier than air gasses should be located within 4 feet of grade as these heavy gasses will tend to settle in low lying areas. For gasses lighter than air, sensor placement should be 4-8 feet above grade in open areas or in pitched areas of enclosed spaces.

Leak Sources

The most probable leak sources within an industrial process include flanges, valves, and tubing connections of the sealed type where seals may either fail or wear. Other leak sources are best determined by facility engineers with experience in similar processes.

Ventilation

Normal ventilation or prevailing wind conditions can dictate efficient location of gas sensors in a manner where the migration of gas clouds is quickly detected.

Personnel Exposure

The undetected migration of gas clouds should not be allowed to approach concentrated personnel areas such as control rooms, maintenance or warehouse buildings. A more general and applicable thought toward selecting sensor location is combining leak source and perimeter protection in the best possible configuration.

Maintenance Access

Consideration should be given to providing easy access for maintenance personnel. Consideration should also be given to the consequences of close proximity to contaminants that may foul the sensor prematurely.

NOTE: All installations of the gas sensor should point straight down (refer to Figure 9). Improper sensor orientation may result in false readings and permanent sensor damage.

Additional Placement Considerations

The sensor should not be positioned where it may be sprayed or coated with surface contaminating substances. Painting sensor assemblies is prohibited.

Although the sensor is designed to be RFI resistant, it should not be mounted in close proximity to high-powered radio transmitters or similar RFI generating equipment.

Mount in an area void of high wind, accumulating dust, rain or splashing from hose spray, direct steam releases, and continuous vibration. If the sensor cannot be mounted away from these conditions then make sure the Detcon Harsh Environment Splashguard accessory is used.

Do not mount in locations where temperatures will exceed the operating temperature limits of the sensor. Where direct sunlight leads to exceeding the high temperature-operating limit, use a sunshade to help reduce temperature.

2.3 Sensor Contaminants and Interference

Electrochemical toxic gas may be adversely affected by exposure to other airborne gasses. Depending on the cross-sensitivity relationship, there may be a positive or negative impact on the reading.

The most commonly present gasses that potentially cause interference problems are listed in Table 4 Cross Interference Table (refer to Section 9).

The presence of cross-interference gasses in an area does not preclude the use of this sensor technology, although it is possible that the sensor could experience a false high or false low reading should exposure occur.

Cross-Interference Data Table

Table 4 Cross Interference Table (refer to Section 9) lists the gasses typically found in industrial environments that may cause a cross-interference response on members of the Detcon family of toxic gas sensors. Review Table 4 in Section 9 for the correct gas and then scan across the list for possible interference gasses. Determine the magnitude of cross-interference that may occur.

2.4 Mounting Installation

The DM-700 sensor assembly is designed to be threaded into a ¾" Female NPT fitting of a standard cast metal, Explosion-Proof Enclosure or Junction Box. There are two wrench flats on the upper section of the sensor that should be used to thread the sensor into the ¾" female NPT receiving connection. Thread the sensor up until tight (5 turns is typically expected) and until the display is pointed in the direction that sensor will normally be viewed and accessed.

The DM-700 should be vertically oriented so that the sensor points straight down. The explosion-proof enclosure or junction box would then typically be mounted on a wall or pole. Detcon provides a standard selection of junction boxes available as sensor accessories (See Figure 8 below). Any appropriately rated enclosure with a downward facing ¾" NPT female connection will suffice.

When mounting on a wall, it is recommended to use a 0.25"-0.5" spacer underneath the mounting ears of the Detcon standard J-Box to offset the sensor assembly from the wall and create open access around the sensor assembly. Spacing requirements for other junction boxes may vary.

When mounting on a pole, secure the Junction Box to a suitable mounting plate and attach the mounting plate to the pole using U-Bolts. (Pole-Mounting brackets for Detcon J-box accessories are available separately.)

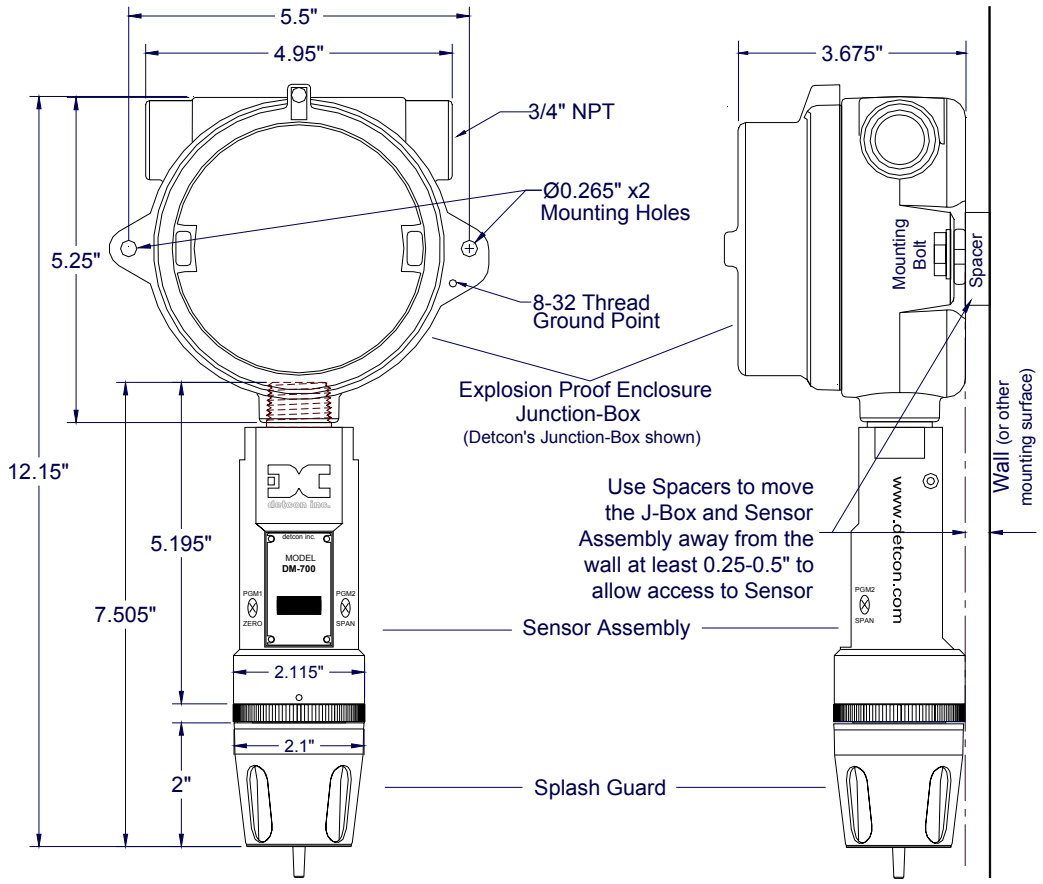

Figure 8 Outline and Mounting Dimensions

2.5 Electrical Installation

The Sensor Assembly should be installed in accordance with local electrical codes. The sensor assemblies are CSA/NRTL approved (US and Canada) for Class I, Division 1, Groups B, C, & D area classifications, and are ATEX Approved for Class I, Zone 1, Group IIC area classifications.

Proper electrical installation of the gas sensor is critical for conformance to Electrical Codes and to avoid damage due to water leakage. Refer to Figure 9 and Figure 10 for proper electrical installation.

NOTE: If a conduit run exits the secondary port, repeat the installation technique shown in Figure 9.

In Figure 9, the drain allows water condensation inside the conduit run to safely drain away from the sensor assembly. The electrical seal fitting is required to meet the National Electrical Code per NEC Article 500-3d (or Canadian Electrical Code Handbook Part 1 Section 18-154). Requirements for locations of electrical seals are covered under NEC Article 501-5. Electrical seals also act as a secondary seal to prevent water from entering the wiring terminal enclosure. However, they are not designed to provide an absolute water-tight seal, especially when used in the vertical orientation.

NOTE: A conduit seal is typically required to be located within 18" of the J-Box and Sensor Assembly. Crouse Hinds type EYS2, EYD2 or equivalent are suitable for this purpose.

NOTE: The Detcon Warranty does not cover water damage resulting from water leaking into the enclosure. Since the electronics are 100% epoxy encapsulated, only the wire terminations can get wet. This could cause abnormal operation and possibly cause corrosion to the terminal connections. However, it would not be expected to cause permanent damage to the sensor.

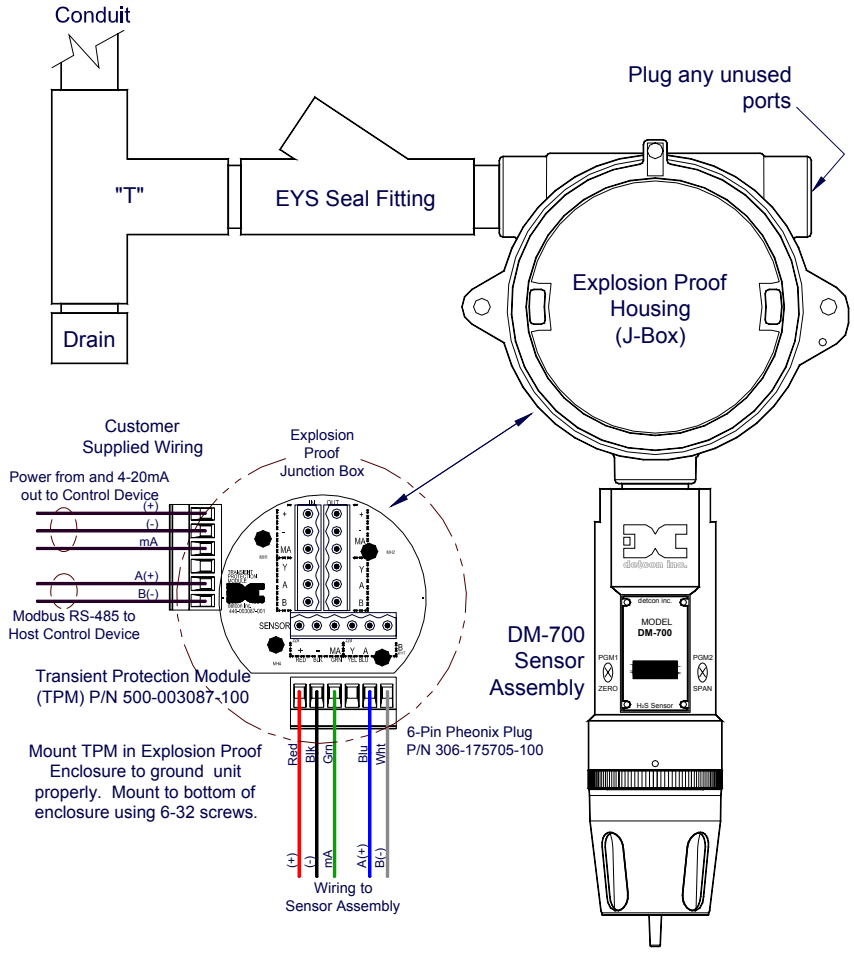

Figure 9 Typical Installation

NOTE: Any unused ports should be blocked with suitable ¾" male NPT plugs. Detcon supplies one ¾" NPT male plug with their accessory J-box enclosures. If connections are other than ¾" NPT, use an appropriate male plug of like construction material.

NOTE: For sensors installed in severe outdoor environments it is advised to use 2 wraps of PTFE Teflon tape on the ¾" NPT thread connections to prevent permanent galling and eliminate water ingress around threads.

2.6 Field Wiring

Detcon Model DM-700 toxic gas sensors assemblies require three conductor connections between power supplies and host electronic controller's 4-20mA output, and two conductor connections for the Modbus™ RS-485 serial interface. Wiring designations are + (DC), – (DC), mA (sensor signal), and Modbus™ RS-485 A (+), and B(-). Maximum wire length between sensor and 24VDC source is shown in the Table 1 below. Maximum wire size for termination in the Detcon J-Box accessory is 14 gauge.

Table 1 Wire Gauge vs. Distance

AWG	Wire Dia.	Meters	Feet	Over-Current Protection
22	0.723mm	700	2080	3A
20	0.812mm	1120	3350	5A
18	1.024mm	1750	5250	7A
16	1.291mm	2800	8400	10A
14	1.628mm	4480	13,440	20A

NOTE 1: Wiring table is based on stranded tinned copper wire and is designed to serve as a reference only.

NOTE 2: Shielded cable is required for installations where cable trays or conduit runs include high voltage lines or other possible sources of induced interference. Separate conduit runs are highly recommended in these cases.

NOTE 3: The supply of power should be from an isolated source with over-current protection as stipulated in table.

Terminal Connections

CAUTION: Do not apply System power to the sensor until all wiring is properly terminated. Refer to Section 2.7 Initial Start Up

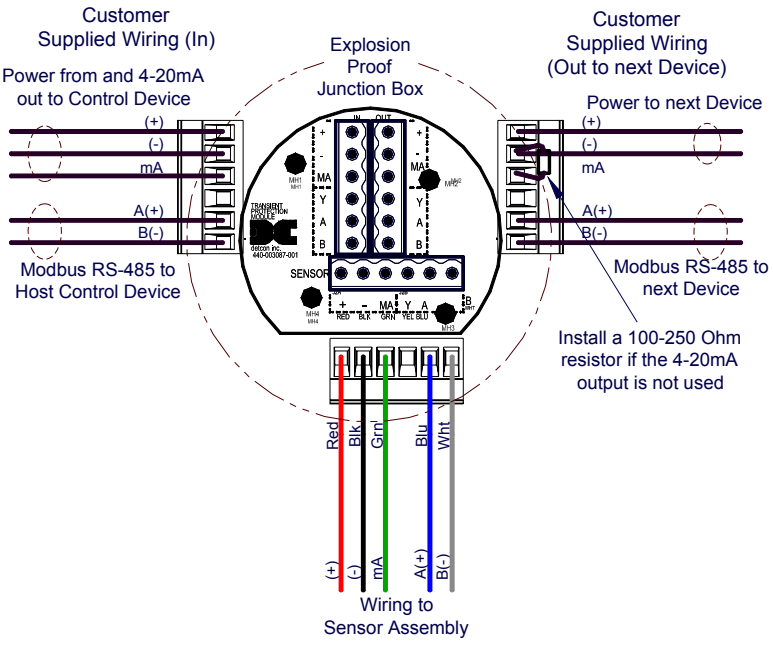

Figure 10 Sensor Wire Connections

a) Remove the junction box cover. Identify the terminal blocks for customer wire connections.

b) Observing correct polarity, terminate the 3-conductor 4-20mA field wiring (+, -, mA) to the sensor assembly wiring in accordance with the detail shown in Figure 10. If the 4-20mA output is not used, install a 100-250Ω resistor between the mA and (-) terminals on the Transient Protection Module.

NOTE: If the 4-20mA output is not being used, a 100-250Ω resistor ***must*** be installed between the mA and (-) terminals on the Transient Protection Module to ensure RS-485 communication is not disrupted by a 4-20mA Fault.

a) If applicable, terminate the RS-485 serial wiring as shown in Figure 10. Use the second plug (Out) as termination point on the customer side to facilitate a continuous RS-485 serial loop.

The RS-485 (if applicable) requires 24 gauge, two conductor, shielded, twisted pair cable between the sensor and host. Belden Cable part number 9841 is recommended.

NOTE: Install a 120-ohm resistor across A & B terminals on the last sensor in the serial loop.

c) Trim all exposed wire leads if they are not permanently landed in the terminal block.

d) Replace the junction box cover.

2.7 Initial Start Up

Upon completion of all mechanical mounting and termination of all field wiring, apply system power in the range of 11.5-30VDC (24VDC typical) and observe the following normal conditions:

2.7.1 Toxic Gas Sensors

a) DM-700 display reads "0", and no fault messages are flashing.

b) A temporary upscale or downscale reading may occur as the sensor stabilizes. This upscale reading will typically decrease to "0" ppm within 1-2 minutes of power-up, assuming there is no gas in the area of the sensor.

c) Sensors that use a bias voltage require a longer time to stabilize. This can vary between 1 and 24 hours depending on the sensor type and range. Biased sensors include NH_3, NO, HCl, and VOC gasses (ethylene oxide, ethylene, methanol, formaldehyde….etc).

NOTE: The 4-20mA signal is held constant at 4mA for the first two minutes after power up.

Initial Operational Tests

After a warm up period of 1 hour (or when zero has stabilized), the sensor should be checked to verify sensitivity to the target gas.

Material Requirements

-Detcon PN 613-120000-700 700 Series Splash Guard with integral Cal Port. -OR-
-Detcon PN 943-000006-132 Threaded Calibration Adapter
-Detcon Span Gas; 50% of range target gas in balance N_2 or Air at fixed flow rate between 200-500cc/min

NOTE: Calibration gas generators using perm tubes or electrochemical sources may be used in place of span gas cylinders.

a) Attach the calibration adapter to the threaded sensor housing or connect tubing to integral cal port. Apply the test gas at a controlled flow rate of 200 - 500cc/min (500cc/min is the recommended flow). Observe that the ITM display increases to a level near that of the applied calibration gas value.

b) Remove test gas and observe that the ITM display decreases to "0".

Initial operational tests are complete. DM-700 toxic gas sensors are factory calibrated prior to shipment, and should not require significant adjustment on start up. However, it is recommended that a complete calibration test and adjustment be performed 16 to 24 hours after power-up. Refer to zero and span calibration instructions in Section 3.4.

2.7.2 O_2 Deficiency Sensors

a) DM-700 display reads close to 20.9% and no fault messages are flashing.

b) The reading should stabilize within 1 to 2 minutes of power-up (assuming a 'normal' ambient O_2 concentration).

Initial Operational Tests

After a warm-up period of 5 minutes the sensor should be checked to verify response to O_2 deficiency.

Material Requirements

-Detcon PN 613-120000-700 700 Series Splash Guard with integral Cal Port. -OR-
-Detcon PN 943-000006-132 Threaded Calibration Adapter
-Detcon Zero Gas: 100% N2 at fixed flow rate of 200-500cc/min

a) Attach the calibration adapter to the threaded sensor housing or connect tubing to the integral cal port. Apply the test gas at a controlled flow rate of 200-500cc/min (500cc/min is the recommended flow). Observe that the ITM display decreases to a level near zero.

b) Remove test gas and calibration adapter. The ITM display should return to a reading of 20.9%.

Initial operational tests are complete. DM-700 O_2 deficiency sensors are factory calibrated prior to shipment, and should not require significant adjustment on start up. However, it is recommended that a complete calibration test and adjustment be performed 16 to 24 hours after power-up. Refer to zero and span calibration instructions in Section 3.4.

3. Operation

3.1 Programming Magnet Operating Instructions

The Operator Interface of the Model 700 Series gas sensors is accomplished via two internal magnetic switches located to either side of the LED display (see Figure 12). The two switches, labeled "PGM1" and "PGM2", allow for complete calibration and configuration, thereby eliminating the need for area de-classification or the use of hot permits.



Figure 11 Magnetic Programming Tool

The magnetic programming tool (Figure 11) is used to operate the magnetic switches. Switch action is defined as momentary contact, 3-second hold, and 10-second hold. (Hold times are defined as the time from the point when the arrow prompt "▶" appears.) For momentary contact use, the programming magnet is briefly held over a switch location. For 3-second hold, the programming magnet is held in place over the switch location for three seconds. For 10-second hold, the programming magnet is held in place over the switch location for 10 seconds. The 3 and 10 second holds are generally used to enter calibration/program menus and save new data. The momentary contact is generally used to move between menu items and to modify set-point values. Arrows ("▶" and "◀") are used on the LED display to indicate when the magnetic switches are activated. The location of "PGM1" and "PGM2" are shown in Figure 12.

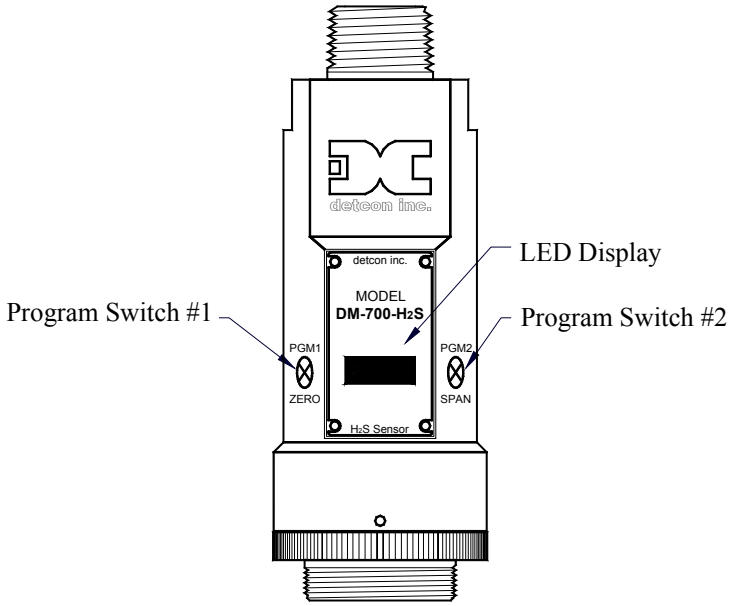

Figure 12 Magnetic Programming Switches

NOTE: While in the Program Mode, if there is no magnetic switch interaction after 4 consecutive menu scrolls, the sensor will automatically revert to normal operating condition. While changing values inside menu items, **if there is no magnet activity after 3-4 seconds the sensor will revert to the menu scroll.**
(Exception to this is with "Signal Output Check" mode.)

3.2 Operator Interface

The operating interface is menu-driven via the two magnetic program switches located under the target marks of the sensor housing. The two switches are referred to as "PGM1" and "PGM2". The menu list consists of three major items that include sub-menus as indicated below. (Refer to the complete Software Flow Chart.)

Normal Operation

Current Reading and Gas Type/Fault Status

Calibration Mode

AutoZero
AutoSpan

Program Mode

View Sensor Status
- Sensor Model Type
- Current Software Version
- Gas Type
- Range of Detection
- Serial ID address
- AutoSpan Level
- Days Since Last AutoSpan
- Remaining Sensor Life
- mA Output
- Input Voltage Supply
- Sensor Temperature
- Output
- Bias Voltage
- Gain Setting
- Raw Counts

Set AutoSpan Level
Set Serial ID
Set Range
Signal Output Check
Restore Default Settings

Software Flowchart

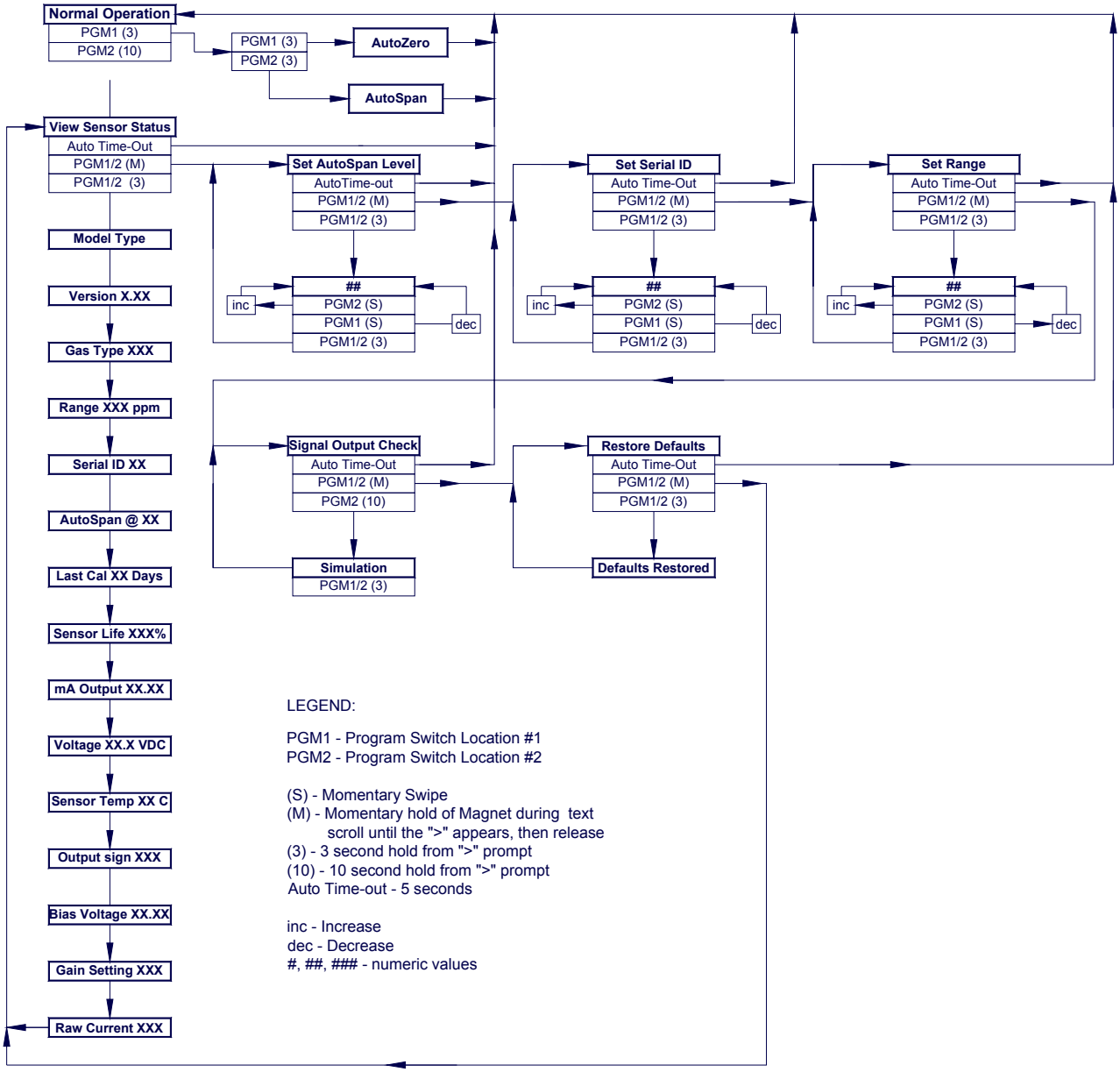

Figure 13 DM-700 Software Flowchart

3.3 Normal Operation

In normal operation, the ITM Display continuously shows the current sensor reading, which will normally appear as " 0 ". Once every 60 seconds the LED display will flash the sensor's measurement units and gas type (i.e. ppm H_2S). If the sensor is actively experiencing any diagnostic faults, a "Fault Detected" message will scroll across the display on the ITM display once every minute instead of the units of measure and the gas type. At any time, while the sensor is in "Fault Detected" mode, PGM1 or PGM2 can be swiped to prompt the sensor to display a list of the active faults.

In normal operation, the 4-20mA current output linearity corresponds with the full-scale range. The RS-485 Modbus™ serial output provides the current gas reading and complete fault status on a continuous basis when polled by the master device.

3.4 Calibration Mode

3.4.1 AutoZero

The AutoZero function is used to zero the sensor. AutoZero should be performed periodically or as required. AutoZero should be considered after periods of over-range target gas exposure. Local ambient air can be used to zero calibrate a toxic gas sensor as long as it can be confirmed that it contains no target or interference gasses. If this cannot be confirmed then a zero air or N_2 cylinder should be used. Pure N_2 must be used for zero calibration of the O_2 deficiency sensors.

Material Requirements:

-Detcon PN 327-000000-000 MicroSafe™ Programming Magnet
-Detcon PN 613-120000-700 700 Series Splash Guard with integral Cal Port. -OR-
-Detcon PN 943-000006-132 Threaded Calibration Adapter
-Detcon PN 942-001123-000 Zero Air cal gas (or use ambient air if no target gas is present).
-Detcon P/N 942-640023-100 Nitrogen 99.99%

NOTE: The zero gas source may be zero air or N_2 for toxic sensors, but must be pure N_2 (99.99%) for O_2 deficiency sensors

a) For toxic sensors, if the ambient air is known to contain no target gas content, then it can be used for zero calibration. If a zero gas cal cylinder is going to be used, attach the calibration adapter and set flow rate of 200-500cc/min (500cc/min is the recommended flow rate) and let sensor purge for 1-2 minutes before executing the AutoZero. For O_2 deficiency sensors, apply N_2 at a set flow rate of 500cc/min for 3-5 minutes before executing AutoZero.

b) From Normal Operation, enter Calibration Mode by holding the programming magnet over PGM1 for 3 seconds. Note, the "⏵" prompt will show that the magnetic switch is activated during the 3 second hold period. The display will then scroll "**PGM1=AutoZero …PGM2=AutoSpan**". Hold the programming magnet over PGM1 for 3 seconds once the "⏴" prompt appears to execute AutoZero (or allow to timeout in 5 seconds if AutoZero is not desired).

NOTE: Upon entering Calibration Mode, the 4-20mA signal drops to 2mA and is held at this level until the program returns to normal operation. Modbus™ Status Register bit 14 is also set to signify when the sensor is in-calibration mode.

c) The ITM will display the following sequence of text messages as it proceeds through the AutoZero sequence:

Zero Cal. . . Setting Zero. . . Zero Saved (each will scroll twice)

d) Remove the zero gas and calibration adapter, if applicable.

3.4.2 AutoSpan

The AutoSpan function is used to span calibrate the sensor. AutoSpan should be performed periodically or as required. AutoSpan should be considered after periods of over-range target gas exposure. Unless otherwise specified, span adjustment is recommended at 50% of range. This function is called "AUTO SPAN".

NOTE: Before performing AutoSpan Calibration, verify that the AutoSpan level matches the span calibration gas concentration as described in Section 3.5.2 Set AutoSpan Level.

Material Requirements:

-Detcon PN 327-000000-000 MicroSafe™ Programming Magnet
-Detcon PN 613-120000-700 700 Series Splash Guard with integral Cal Port. -OR-
-Detcon PN 943-000006-132 Threaded Calibration Adapter
-Detcon Span Gas (See Detcon for Ordering Information). Recommended span gas is 50% of range with target gas. Other suitable span gas sources containing the target gas in air or N_2 balance are acceptable.

NOTE 1: Contact Detcon for Ordering Information on Span Gas cylinders.

NOTE 2: A target gas concentration of 50% of range is strongly recommended. This should be supplied at a controlled flow rate of 200 to 500cc/min, with 500cc/min being the recommended flow rate. Other concentrations can be used if they fall within allowable levels of 5% to 100% of range.

NOTE 3: Ambient air should be used to calibrate O2 deficiency sensors as long as the oxygen concentration is confirmed to be 20.9%

NOTE 4: It is generally not advised to use other gasses to cross-calibrate for span. Cross-calibration by use of other gasses should be confirmed by Detcon.

CAUTION: Verification that the calibration gas level setting matches the calibration span gas concentration is required before executing "AutoSpan" calibration. These two numbers must be equal.

AutoSpan consists of entering Calibration Mode and following the menu-displayed instructions. The display will ask for the application of span gas in a specific concentration. The applied gas concentration must be equal to the calibration gas level setting. The factory default setting and recommendation for span gas concentration is 50% of range. If a span gas containing the recommended concentration is not available, other concentrations may be used as long as they fall between 5% and 100% of range. However, any alternate span gas concentration value must be programmed via the "**Set AutoSpan Level**" menu before proceeding with AutoSpan calibration. Follow the instructions "a" through "e" below for AutoSpan calibration.

a) Verify that the AutoSpan Level is equal to the Calibration Span Gas Concentration. (Refer to View Sensor Status in Section 3.5.1.) If the AutoSpan Level is not equal to the Calibration span gas concentration, adjust the AutoSpan Level as instructed in Section 3.5.2 Set AutoSpan Level.

b) From Normal Operation, enter Calibration Mode by holding the programming magnet over PGM1 for 3 seconds. Note, the "⏵" prompt will show that the magnetic switch is activated during the 3 second hold period. The display will then scroll "**PGM1=AutoZero. . . PGM2=AutoSpan**". Hold the programming magnet over PGM2 for 3 seconds to execute AutoSpan (or allow to timeout in 5 seconds if AutoSpan is not intended). The ITM will then scroll "**Apply XX ppm Gas**".

NOTE: Upon entering Calibration Mode, the 4-20mA signal drops to 2mA and is held at this level until the program returns to normal operation. Modbus™ Status Register bit 14 is also set to signify when the sensor is in-calibration mode.

c) Apply the span calibration test gas for toxic gas sensors at a flow rate of 200-500cc/min (500cc/min is the recommended flow rate). As the sensor signal begins to increase the display will switch to flashing "**XX**" reading as the ITM shows the sensor's "as found" response to the span gas presented. If it fails to meet the minimum in-range signal change criteria within 2½ minutes, the display will report "**Range Fault**" twice and the ITM will return to normal operation, aborting the AutoSpan sequence. The ITM will continue to report a "Range Fault" and will not clear the fault until a successful AutoSpan is completed.

NOTE: Ambient air should be used to calibrate O_2 deficiency sensors as long as the oxygen concentration is confirmed to be 20.9% . There is no need to apply a flow of gas.

Assuming acceptable sensor signal change, after 1 minute the reading will auto-adjust to the programmed AutoSpan level. During the next 30 seconds, the AutoSpan sequence checks the sensor for acceptable reading stability. If the sensor fails the stability check, the reading is re-adjusted back to the AutoSpan level and the cycle repeats until the stability check is passed. Up to three additional 30-second stability check periods are allowed before the unit reports a "**Stability Fault**" twice and the ITM will return to normal operation, aborting the AutoSpan sequence. The ITM will continue to report a "**Stability Faul**t" and will not clear the fault until a successful AutoSpan is completed.

If the sensor passes the stability check, the ITM reports a series of messages:
"**Span OK**"
"**Sensor Life XXX%"**
"**Remove Span Gas**"

d) Remove the span gas source and calibration adapter. The ITM will report a live reading as it clears toward "0". When the reading clears below 5% of range, the ITM will display "**Span Complete**" and will revert to normal operation. If the sensor fails to clear to less than 5% in less than 5 minutes, a "**Clearing Fault**" will be reported twice and the ITM will return to normal operation, aborting the AutoSpan sequence. The ITM will continue to report a "**Clearing Fault**" and will not clear the fault until a successful AutoSpan is completed.

NOTE: When calibrating O2 deficiency sensors, there is no requirement to clear to <5% of range. The sensor will return to normal operation immediately after span adjustment.

e) The AutoSpan calibration is complete.

NOTE 1: If the sensor fails the minimum signal change criteria, a **"Range Fault"** will be declared and a "**Fault Detected**" message will be displayed alternately with the sensor's current reading. The 4-20mA output will be taken to 0mA and the 'Range Fault' fault bit will be set on the Modbus™ output.

NOTE 2: If the sensor fails the stability criteria, a **"Stability Fault"** will be declared and a "**Fault Detected**" message will be displayed alternately with the sensor's current reading. The 4-20mA output will be taken to 0mA and the 'Stability Fault' fault bit will be set on the Modbus™ output.

NOTE 3: If the sensor fails the clearing time criteria, a "**Clearing Fault**" will be declared and a **"Fault Detected**" message will be displayed alternately with the sensor's current reading. The 4-20mA output will be taken to 0mA and the 'Clearing Fault' fault bit will be set on the Modbus™ output.

3.5 Program Mode

Program Mode provides a "**View Sensor Status**" menu to check operational and configuration parameters. Program Mode provides for adjustment of the AutoSpan Level and Serial ID. Additionally, Program Mode includes the diagnostic function "Signal Output Check" and "Restore Factory Defaults".

The Program Mode menu items appear in the order presented below:

View Sensor Status
Set AutoSpan Level
Set Serial ID
Set Range
Signal Output Check
Restore Default Settings

Navigating Program Mode

From Normal Operation, enter Program Mode by holding the magnet over PGM2 for 10 seconds. Note, the "▶" prompt will show that the magnetic switch is activated during the 10 second hold period. The ITM will enter Program Mode and the display will display the first menu item "View Sensor Status". To advance to the next menu item, hold the magnet over PGM1 or PGM2 while the current menu item's text is scrolling. At the conclusion of the text scroll the arrow prompt ("▶" for PGM2 or "◀" for PGM1) will appear, and immediately remove the magnet. The ITM will advance to the next menu item. Repeat this process until the desired menu item is displayed. Note, PGM1 moves the menu items from right to left and PGM2 moves the menu items from left to right.

To enter a menu item, hold the magnet over PGM1 or PGM2 while the menu item is scrolling. At the conclusion of the text scroll the "▶"prompt ("▶" for PGM2 or "◀" for PGM1) will appear, continue to hold the magnet over PGM1 or PGM2 for an additional 3-4 seconds to enter the selected menu item. If there is no magnet activity while the menu item text is scrolling (typically 4 repeated text scrolls), the ITM will automatically revert to Normal Operation.

3.5.1 View Sensor Status

View Sensor Status displays all current configuration and operational parameters including: sensor type, software version number, gas type, detection range, AutoSpan level, days since last AutoSpan, estimated remaining sensor life, raw sensor current, mA output, input voltage and sensor ambient temperature.

From the **View Sensor Status** text scroll, hold the magnet over PGM1 or PGM2 until the "▶" prompt appears and continue to hold the magnet in place for an additional 3-4 seconds (until the display starts to scroll "Status Is"). The display will scroll the complete list of sensor status parameters sequentially:

Sensor Model Type

The menu item appears as: "Model DM-700"

Current Software Version

The menu item appears as: "Version 1.XX"

Gas Type

The menu item appears as: " Gas Type = H2S"

Range of Detection.

The menu item appears as: "Range XXX ppm"

Serial ID address.

The menu item appears as: "Serial ID XX"

AutoSpan Level.

The menu item appears as: “AutoSpan at XX ppm”

Days Since Last AutoSpan.

The menu items appears as: “Last Cal XX days”

Remaining Sensor Life.

The menu item appears as: “Sensor Life 100%”

mA Output

The menu item appears as: “mA Output XX.XX”

Input Voltage Supply

The menu item appears as: “Voltage XX.X VDC”

Sensor Temperature

The menu item appears as: “Operating Temp XX C”

Output

The menu item appears as: “Output X”

Bias Voltage

The menu item appears as: “Bias Voltage XXXmV”

Gain Setting

The menu item appears as: “Gain Setting XX”

Raw Counts

The menu item appears as: “Raw Counts XXXX”

When the status list sequence is complete, the ITM will revert to the “View Sensor Status” text scroll. The user can either: 1) review list again by executing another 3-4 second hold, 2) move to another menu item by executing a momentary hold over PGM1 or PGM2, or 3) return to Normal Operation via automatic timeout of about 15 seconds (the display will scroll “View Sensor Status” 4 times and then return to Normal Operation).

3.5.2 Set AutoSpan Level

Set AutoSpan Level is used to set the span gas concentration level that is being used to calibrate the sensor. This level is adjustable from 1% to approximately 75% or 95% dependent on full-scale range. The current setting can be viewed in View Program Status.

The menu item appears as: “**Set AutoSpan Level**”

From the **Set AutoSpan Level** text scroll, hold the magnet over PGM1 or PGM2 until the “▶” prompt appears and continue to hold the magnet in place for an additional 3-4 seconds (until the display starts to scroll “Set Level”). The display will switch to “ XX“ (where XX is the current gas level). Swipe the magnet momentarily over PGM2 to increase or PGM1 to decrease the AutoSpan Level until the correct level is

displayed. When the correct level is achieved, hold the magnet over PGM1 or PGM2 for 3-4 seconds to accept the new value. The display will scroll "Level Saved", and revert to "Set AutoSpan Level" text scroll.

Move to another menu item by executing a momentary hold, or return to Normal Operation via automatic timeout of about 15 seconds (the display will scroll "Set AutoSpan Level" 4 times and then return to Normal Operation).

3.5.3 Set Serial ID

Detcon Model CM-700 sensors can be polled serially via RS-485 Modbus™ RTU. Refer to Section 4.0 for details on using the Modbus™ output feature.

Set Serial ID is used to set the Modbus™ serial ID address. It is adjustable from 01 to 256 in hexadecimal format (01-FF hex). The current serial ID can be viewed in View Sensor Status using the instruction given in Section 3.5.1 View Sensor Status.

The menu item appears as: "**Set Serial ID**".

From the "**Set Serial ID"** text scroll, hold the programming magnet over PGM1 or PGM2 until the "⏵" prompt appears and continue to hold the magnet in place for an additional 3-4 seconds (until the display starts to scroll "Set ID"). The display will then switch to " **XX**" (where XX is the current ID address). Swipe the magnet momentarily over PGM2 to increase or PGM1 to decrease the hexadecimal number until the desired ID is displayed. Hold the magnet over PGM1 or PGM2 for 3-4 seconds to accept the new value. The display will scroll "ID Saved", and revert to "Set Serial ID" text scroll.

Move to another menu item by executing a momentary hold, or, return to Normal Operation via automatic timeout of about 15 seconds (the display will scroll "Set Serial ID" 5 times and then return to Normal Operation).

3.5.4 Set Range

The full-scale range of a DM-700 sensor is determined at the time of order. The Intelligent Plug-in Sensor is factory calibrated for this range. However, if the application requirements change and the user needs to alter the original range, the "Set Range" function can be used to make field adjustments.

The currently selected full-scale range is displayed in the "**View Sensor Status**" menu. The factory calibrated full-scale range is printed on the Intelligent Plug-in Sensor Label. When a new range is selected the 4-20mA and Modbus™ outputs will automatically be rescaled, and the span gas level will default to 50% of the new range.

The menu item appears as: "**Set Range**"

From the "**Set Range"** text scroll, hold the programming magnet over PGM1 or PGM2 until the "⏵" prompt appears and continue to hold the magnet in place for an additional 3-4 seconds (until the display starts to scroll "Set Range"). The display will then switch to "XXX" (where XXX is the current Range). Swipe the magnet momentarily over PGM2 to increase or PGM1 to decrease the range Level until the desired range is displayed. Hold the magnet over PGM1 or PGM2 for 3 seconds to accept the new value. The display will scroll "Range Saved", and revert to "Set Range" text scroll.

Selectable ranges are:
1, 2, 3, 4, 5, 6, 7, 8, 9, 10
15, 20, 25, 30, 35, 40, 45, 50, 55, 60, 65, 70, 75, 80, 85, 90, 95, 100
150, 200, 250, 300, 350, 400, 450, 500, 600, 700, 800, 900, 1000
2000, 3000, 4000, 5000, 6000, 7000, 8000, 9000, 10,000

The range can only be changed to a new range that is between 4 times greater or 4 times less than that of the current plug-in sensor. I.E. For a plug-in sensor of 100ppm, the range can be set as low as 25ppm or as high as 400ppm.

Move to another menu item by executing a momentary hold, or, return to Normal Operation via automatic timeout of about 15 seconds (the display will scroll "Set Range" 4 times and then return to Normal Operation).

NOTE1: The sensor should be re-calibrated after any change is made to the sensor range. AutoSpan and AutoZero should be re-established.

NOTE2: When a new plug-in sensor is installed, the ITM will automatically default to the range of the plug-in sensor.

3.5.5 Signal Output Check

Signal Output Check provides a simulated 4-20mA output and RS-485 Modbus™ output. This simulation allows the user to conveniently perform a functional system check of their entire safety system. This signal output simulation also aids the user in performing troubleshooting of signal wiring problems.

The menu item appears as: "**Signal Output Check**".

From the "**Signal Output Check**" text scroll, hold the magnet over PGM1 or PGM2 until the "▶" prompt appears and then hold continuously for an additional 10 seconds. Once initiated, the display will scroll "**Simulation Active**" until the function is stopped. During simulation mode, the 4-20mA value will be increased from 4.0mA to 20.0mA (in 1% of range increments at about a 1 second update rate) and then decreased from 20.0mA to 4.0mA. The same simulation sequence is applied to the Modbus™ output gas reading.

NOTE: Signal Output Check stays active indefinitely until the user stops the function. There is no automatic timeout for this feature.

To end simulation mode, hold magnet over PGM1 or PGM2 for 3 seconds. The display will either move to the prior menu item or move to the next menu item respectively.

Move to another menu item by executing a momentary hold, or, return to Normal Operation via automatic timeout of about 15 seconds.

3.5.6 Restore Factory Defaults

Restore Factory Defaults is used to clear current user configuration and calibration data from memory and revert to factory default values. This may be required if the settings have been configured improperly and a known reference point needs to be re-established to correct the problem.

This menu item appears as: "**Restore Defaults**".

NOTE: Restoring factory defaults should only be used when absolutely necessary. All previously existing configuration inputs will have to be re-entered if this function is executed. A full 10-second magnet hold on PGM 2 is required to execute this function.

From the "**Restore Defaults**" text scroll, hold the programming magnet over PGM2 until the "◗" prompt appears and continue to hold 10 seconds. The display will scroll "**Restoring Defaults**", followed by "**New ECS Connected**", and "**Range XX**" where XX is the default range of the intelligent plug-in sensor.

Move to another menu item by executing a momentary hold, or, return to Normal Operation via automatic timeout of about 15 seconds (the display will scroll "Restore Defaults" 4 times and then return to Normal Operation).

Following the execution of "**Restore Defaults**", the DM-700 will revert to its factory default settings. The default settings are:

- Serial ID = 01. The Serial ID must be set appropriately by the operator (Section 3.5.3).

NOTE: The following must be performed in order before the sensor can be placed in operation.

- AutoSpan Level = 50% of range. AutoSpan level must be set appropriately by the operator (Section 3.5.2).
- Range: Defaults to range of intelligent plug-in sensor, must be set to the appropriate level by the operator (Section 3.5.4).
- AutoZero: AutoZero Settings are lost and user must perform new AutoZero (Section 3.4).
- AutoSpan: AutoSpan Settings are lost and user must perform new AutoSpan (Section 3.4).

3.6 Program Features

Detcon DM-700 toxic gas sensors incorporate a comprehensive set of diagnostic features to achieve Fail-Safe Operation. These Operational features and Failsafe Diagnostic features are detailed below.

3.6.1 Operational Features

Over-Range

When gas greater than the full-scale range is detected, the ITM display will continuously flash the full-scale reading. This designates an over-range condition. The 4-20mA signal will report a 22mA output during this time.

Negative Drift

In cases where the sensor may drift negative, the display will show a negative reading between 5% and 10% of the sensors full scale range. I.E. if a 0-100ppm sensor drifts to negative 6 the display will indicate -6. In cases where the full scale range of the sensor is less than 10ppm, due to the limited space on the display, the decimal point will be displayed as an asterisk (*) to denote a negative reading. I.E. if a 0-5ppm sensor drifts to negative 0.32 the display will show 0*32.

In-Calibration Status

When the sensor is engaged in AutoZero or AutoSpan calibrations, the 4-20 mA output signal is taken to 2.0 mA and the in-calibration Modbus™ Status Register bit 14 is set. This alerts the user that the ITM is not in an active measurement mode. This feature also allows the user to log the AutoZero and AutoSpan events via their master control system.

Sensor Life

Sensor Life is calculated after each AutoSpan calibration and is reported as an indicator of remaining service life. It is reported in the "View Sensor Status" menu and as a RS-485 Modbus™ register bit. Sensor Life is

reported on a scale of 0-100%. When Sensor Life falls below 25%, the sensor cell should be replaced within a reasonable maintenance schedule.

Last AutoSpan Date

This reports the number of days that have elapsed since the last successful AutoSpan. This is reported in the View Sensor Status menu. After 180 days, an AutoSpan Fault will be declared.

3.6.2 Fault Diagnostic/Failsafe Features

Fail-Safe/Fault Supervision

Model DM-700 sensors are designed for Fail-Safe operation. If any of the diagnostic faults listed below are active, the ITM Display will scroll the message "Fault Detected" every 1 minute during normal operation. At any time during "Fault Detected" mode, holding the programming magnet over PGM1 or PGM2 for 1 second will display the active fault(s). All active faults are reported sequentially.

Most fault conditions result in failed operation of the sensor. In these cases the 4-20mA signal is dropped to the universal fault level of 0mA. These include the AutoSpan Calibration faults, Heater Fault, Sensor Fault, Processor Fault, Memory Fault, Loop Fault, and Input Voltage Fault. The 0mA fault level is not employed for Temperature or AutoSpan Faults. For every diagnostic fault condition the associated RS-485 Modbus™ fault register will be flagged to alert the user digitally.

NOTE: Refer to the Troubleshooting Guide section for guidance on how to address fault conditions.

Range Fault – AutoSpan

If the sensor fails the minimum signal change criteria (Section 3.4.2) during AutoSpan sequence, the "Range Fault" will be declared. A "Range Fault" will cause a "Fault Detected" message to flash intermittently on the ITM display and drop the 4-20mA output to 0mA. The Modbus™ fault register bit for Range Fault will be set and will not clear until the fault condition has been cleared. The sensor should be considered 'Out-of-Service' until a successful AutoSpan calibration is performed.

Stability Fault - AutoSpan

If the sensor fails the signal stability criteria (Section 3.4.2) during AutoSpan sequence, the "Stability Fault" will be declared. A "Stability Fault" will cause a "Fault Detected" message to flash intermittently on the ITM display and drop the mA output to 0 mA. The Modbus™ fault register bit for Stability Fault will be set and will not clear until the fault condition has been cleared. The sensor should be considered as 'Out-of-Service' until a successful AutoSpan calibration is performed.

Clearing Fault - AutoSpan

If the sensor fails the signal stability criteria (Section 3.4.2) during AutoSpan sequence, the "Clearing Fault" will be declared. A "Clearing Fault" will cause a "Fault Detected" message to flash intermittently on the ITM display and drop the mA output to 0 mA. The Modbus™ fault register bit for Clearing Fault will be set and will not clear until the fault condition has been cleared. The sensor should be considered as 'Out-of-Service' until a successful AutoSpan calibration is performed.

Zero Fault

If the sensor drifts to < -10% of range, an "Under-Range Fault" will be declared. An "Under-Range Fault" will cause a "Fault Detected" message to flash intermittently on the ITM display. The Modbus™ fault register

bit for Under-Range Fault will be set and will not clear until the fault condition has been cleared. If an Under-Range Fault occurs, the 4-20 mA signal will be set at 0mA until the fault condition is resolved.

Sensor Fault

If the intelligent plug-in sensor is not plugged in, plugged in incorrectly, or there is a communication failure, a "Sensor Fault" is declared. A "Sensor Fault" will cause a "Fault Detected" message to flash intermittently on the ITM display. The Modbus™ fault register bit for Sensor Fault will be set and will not clear until the fault condition has been cleared. If a Sensor Fault occurs, the 4-20mA signal will be set at 0mA until the fault condition is resolved.

Processor Fault

If the detector has any unrecoverable run-time errors, a "Processor Fault" is declared. A "Processor Fault" will cause a "Fault Detected" message to flash intermittently on the ITM display. The Modbus™ fault register bit for Processor Fault will be set and will not clear until the fault condition has been cleared. If a Processor Fault occurs, the 4-20 mA signal will be set at 0mA until the fault condition is resolved.

Memory Fault

If the detector has a failure in saving new data to memory, a "Memory Fault" is declared. A "Memory Fault" will cause the "Fault Detected" message to flash intermittently on the ITM display. The Modbus™ fault register bit for Memory Fault will be set and will not clear until the fault condition has been cleared. If a Memory Fault occurs, the 4-20mA signal will be set at 0mA until the fault condition is resolved.

4-20 mA Loop Fault

If the detector measures a 4-20mA loop load resistance > 1000 ohms, a "Loop Fault" is declared. A "Loop Fault" will cause the "Fault Detected" message to flash intermittently on the ITM display. The Modbus™ fault register bit for Loop Fault will be set and will not clear until the fault condition has been cleared. If a Loop Fault occurs, the 4-20mA signal will be set at 0mA until the fault condition is resolved.

Input Voltage Fault

If the detector is currently receiving an input voltage that is outside of the 11.5-28VDC range, an "Input Voltage Fault" is declared. An "Input Voltage Fault" will cause the "Fault Detected" message to flash intermittently on the ITM display. The fault register bit for Input Voltage Fault will be set and will not clear until the fault condition has been cleared. If an Input Voltage Fault occurs, the 4-20mA signal will be set at 0mA until the fault condition is resolved.

Temperature Fault

If the detector is currently reporting an ambient temperature that is outside of the –40C to +75C range, a "Temperature Fault" is declared. A "Temperature Fault" will cause the "Fault Detected" message to flash intermittently on the ITM display. The Modbus™ fault register bit for Temperature Fault will be set and will not clear until the fault condition has been cleared. If a Temperature Fault occurs, the 4-20mA signal remains operational.

AutoSpan Fault

If 180 days has elapsed since the last successful AutoSpan, an AutoSpan Fault will be generated. An "AutoSpan Fault" will cause the "Fault Detected" message to flash intermittently on the ITM display. The ModBus™ fault register bit for AutoSpan Fault will be set and will not clear until the fault condition has been cleared by executing a successful AutoSpan. If an AutoSpan occurs, the 4-20mA signal remains operational.

4. RS-485 Modbus™ Protocol

Model DM-700 sensors feature Modbus™ compatible communications protocol and are addressable via the program mode. Other protocols are available. Contact the Detcon factory for specific protocol requirements. Communication is two wire, half duplex 485, 9600 baud, 8 data bits, 1 stop bit, no parity, with the sensor set up as a slave device. A master controller up to 4000 feet away can theoretically poll up to 256 different sensors. This number may not be realistic in harsh environments where noise and/or wiring conditions would make it impractical to place so many devices on the same pair of wires. If a multi-point system is being utilized, each sensor should be set for a different address. Typical address settings are: 01, 02, 03, 04, 05, 06, 07, 08, 09, 0A, 0B, 0C, 0D, 0E, 0F, 10, 11…etc.

Sensor RS-485 ID numbers are factory default to 01. These can be changed in the field via the Operator Interface described in Section 3.5.5 Set Serial ID.

The following section explains the details of the Modbus™ protocol that the DM-700 sensor supports.

Code 03 - Read Holding Registers, is the only code supported by the transmitter. Each transmitter contains 6 holding registers which reflect its current status.

Register #	High Byte	Low Byte
40000	Gas type	

Gas type is one of the following:
01=CO, 02=H_2S, 03=SO_2, 04=H_2, 05=HCN, 06=CL_2, 07=NO_2, 08=NO, 09=HCL, 10=NH_3, 11=LEL, 12=O_2

Register #	High Byte	Low Byte
40001	Detectable Range	

i.e. 100 for 0-100 ppm, 50 for 0-50% LEL, etc.

Register #	High Byte	Low Byte
40002	Current Gas Reading	

The current gas reading as a whole number. If the reading is displayed as 23.5 on the display, this register would contain the number 235.

Register #	High Byte	Low Byte
40003	Auto Span Level	

Register #	High Byte	Low Byte
40004	Sensor Life	

Sensor life is an estimated remaining use of the sensor head, between 0% and 100%.
Example: 85=85% sensor life

Register #	High Byte	Low Byte
40005	Status Bits	Status Bits

Bits read as 0 are FALSE, bits read as 1 are TRUE

Status Bits High Byte:
Bit 15 – Reserved
Bit 14 – Calibration Mode
Bit 13 – Reserved
Bit 12 – Zero Fault
Bit 11 – Range Fault
Bit 10 – Stability Fault
Bit 9 – Clearing Fault
Bit 8 – Missing Sensor Fault

Status Bits Low Byte:
Bit 7 – Sensor Fault
Bit 6 – Processor Fault
Bit 5 – Memory Fault
Bit 4 – Input Voltage Fault
Bit 3 – 4-20mA Fault
Bit 2 – Temperature Fault
Bit 1 – Auto Span Fault
Bit 0 – Global Fault

5. Service and Maintenance

Calibration Frequency

In most applications, quarterly span calibration intervals will assure reliable detection. However, industrial environments differ. Upon initial installation and commissioning, close frequency tests should be performed, weekly to monthly. Test results should be recorded and reviewed to determine a suitable calibration interval. If, after 180 days, an AutoSpan Calibration is not performed, the ITM will generate an AutoSpan Fault.

Visual Inspection

The Sensor should be inspected annually. Inspect for signs of corrosion, pitting, and water damage. During visual inspection, the Splash Guard should be inspected to insure that it is not blocked. Examine the plug-in sensor for signs of physical blockage, electrolyte leakage, or severe corrosion. Also, inspect inside the Junction Box for signs of water accumulation or Terminal Block corrosion.

Condensation Prevention Packet

A moisture condensation packet should be installed in every explosion proof Junction Box. The moisture condensation prevention packet will prevent the internal volume of the J-Box from condensing and accumulating moisture due to day-night humidity changes. This packet provides a critical function and should be replaced annually. Detcon's PN is 960-202200-000.

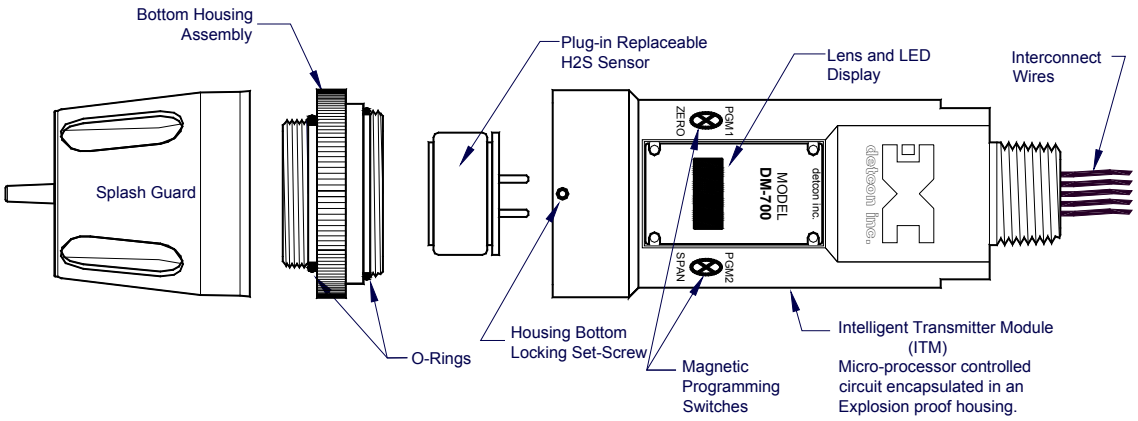

Figure 14 Sensor Assembly

Replacement of Intelligent Plug-in Sensor

NOTE: It is not necessary to remove power while changing the plug-in toxic gas sensor in order to maintain area classification, since it is intrinsically safe.

a) Use a 1/16" Allen wrench to release the locking setscrew that locks the ITM and Splash Guard Adapter together (One turn will suffice - Do not remove setscrew completely).

b) Remove splashguard. Unthread and remove the Splash Guard Adapter from the ITM.

d) Gently pull the plug-in sensor out of the ITM. Orient the new plug-in sensor so that it matches with the female connector pins. Use the alignment marks provided to assure alignment is correct. When properly aligned, press the sensor in firmly to make the proper connection.

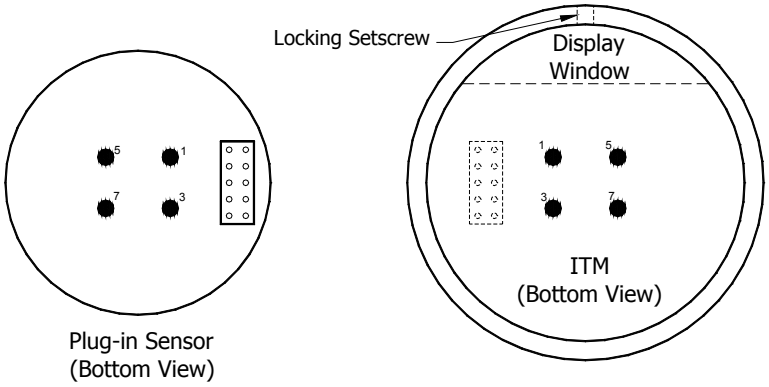

Figure 15 Sensor Cell and ITM Mating

e) Thread the Splash Guard Adapter onto the ITM to a snug fit and tighten the locking setscrew using the 1/16" Allen wrench. Reinstall the splashguard.

f) Verify the gas type and range of the new sensor by checking in View Program Status. It is recommended "AutoZero and AutoSpan functions be performed, as per Section 3.4 Calibration Mode, to match the new intelligent plug-in sensor with the ITM.

Replacement of ITM

a) Remove the power source from the sensor assembly. Disconnect all sensor wire connections at the J-Box taking note of the wire connections.

NOTE: It is necessary to remove power to the J-Box while changing the ITM in order to maintain area classification.

b) Use a wrench and the wrench flats provided at the top section of the ITM and unthread the ITM until it can be removed.

c) Use a 1/16" Allen wrench to release the locking setscrew that locks the ITM and Splash Guard Adapter together (One turn will suffice - Do not remove setscrew completely).

d) Remove splashguard. Unthread and remove the Splash Guard Adapter from the ITM.

e) Gently remove the plug-in toxic gas sensor from the old ITM and install it in the new ITM. Orient the plug in sensor so that it matches with the female connector pins on the new ITM and press the sensor in firmly to make proper connection.

f) Thread the Splash Guard Adapter onto the ITM until snug, tighten the locking setscrew and reconnect splashguard.

g) Feed the sensor assembly wires through the ¾" female NPT mounting hole and thread the assembly into the J-box until tight and the ITM lens faces toward the front access point. Connect the sensor assembly wires inside J-Box (Refer to Section 2.6, and Figure 10).

h) Perform Set AutoSpan Level, Set Serial ID, Set Range, and then perform a successful AutoZero and AutoSpan before placing sensor into service.

Replacement of DM-700 Sensor Assembly.

a) Remove the power source from the sensor assembly. Disconnect all sensor wire connections at the J-Box.

NOTE: It is necessary to remove power to the J-Box while changing the DM-700 sensor in order to maintain area classification.

b) Use a wrench and the wrench flats provided at the top section of the ITM and unthread the ITM until it can be removed.

c) Use a 1/16" Allen wrench to release the locking setscrew that locks the ITM and Splash Guard Adapter together (One turn will suffice - Do not remove setscrew completely).

d) Remove splashguard. Unthread and remove the Splash Guard Adapter from the ITM.

e) Feed the new DM-700 sensor assembly wires through the ¾" female NPT mounting hole and thread the assembly into the J-box until tight and the ITM lens faces toward the front access point. Connect the sensor assembly wires inside J-Box (Refer to Section 2.6, and Figure 10).

d) DM-700 sensors are factory calibrated, however, they require an initial AutoZero and AutoSpan calibration (Section 3.4), and must be configured per customer specific application requirements.

6. Troubleshooting Guide

Refer to the list of Failsafe Diagnostic features listed in Section 3.6.2 for additional reference in troubleshooting activities. Listed below are some typical trouble conditions and their probable cause and resolution path.

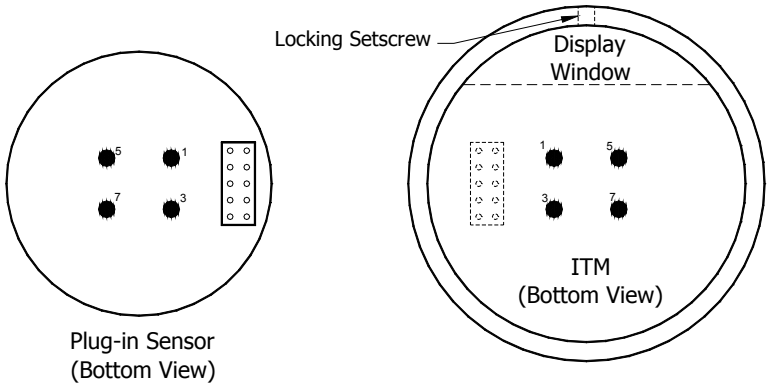

Figure 16 Sensor Cell and ITM Mating

Under-Range Fault

Probable Cause: Sensor Baseline drifted lower, Interference gasses,
Repeat AutoZero. Use Zero Air or N_2 source.
Allow more time for zero stabilization if this is a biased sensor type.
Execute successful AutoSpan and verify adequate Sensor Life
Check Raw counts in View Sensor Status. Should be close to 33,000 counts when normal.
Replace plug-in sensor if fault continues.

Missing Sensor Fault

Probable Cause: Sensor is Missing, Failed Plug-in Sensor Electronics, or ITM I.S. Barrier Failure
Make sure plug-in sensor is plugged in properly with correct orientation.
Swap plug-in sensor into another ITM to determine if plug-in sensor problem or ITM problem
Replace the plug-in sensor if proven faulty
Replace the ITM if proven faulty

AutoSpan Calibration Faults – (Range, Stability and Clearing)

To clear any AutoSpan Calibration fault, the AutoSpan process must be completed successfully (Section3.4).

Range Fault

Probable Causes: Failed Sensor, Cal Gas not applied or not applied at appropriate time, problems w/ cal gas and delivery
Check validity of span gas using pull tube or other means (check MFG date on cal gas cylinder).
Use proper cal gas regulators and tubing for highly corrosive gasses
Check for obstructions affecting cal gas hitting sensor face (including being wet, blocked, or corroded).
Verify adequate Sensor Life
Replace the plug-in toxic sensor.

Stability Fault

Probable Causes: Failed Sensor, empty or close to empty Cal Gas Cylinder, problems w/ cal gas and delivery
Check validity of span gas using pull tube or other means (check MFG date on cal gas cylinder).
Use proper cal gas regulators and tubing for highly corrosive gasses
Check for obstructions affecting cal gas hitting sensor face (including being wet, blocked, or corroded).
Verify adequate Sensor Life
Replace the plug-in toxic sensor.

Clearing Fault

Probable Causes: Failed Sensor, Cal Gas not removed at appropriate time, problems w/ cal gas and delivery, Background of Target Gas
Must recover to < 5% of range in < 5 min after AutoSpan is complete
Use bottled air (zero air or N_2) if there is a known continuous background level.
Check validity of span gas using pull tube or other means (check MFG date on cal gas cylinder).
Use proper cal gas regulators and tubing for highly corrosive gasses
Check for obstructions affecting cal gas hitting sensor face (including being wet, blocked, or corroded).
Verify adequate Sensor Life
Replace the plug-in toxic sensor.

Poor Calibration Repeatability

Probable Causes: Failed Sensor, use of wrong Cal Gas or problems w/ cal gas and delivery, Interference Gasses
Check for adequate Sensor Life.
Check validity of span gas using pull tube or other means (check MFG date on cal gas cylinder).
Use proper cal gas regulators and tubing for highly corrosive gasses
Check for obstructions affecting cal gas hitting sensor face (including being wet, blocked, or corroded).
Verify adequate Sensor Life
Replace the plug-in toxic sensor.

Unstable Output/ Sudden spiking

Possible Causes: Unstable power supply, inadequate grounding, or inadequate RFI protection.
Verify Power source is stable.
Verify field wiring is properly shielded and grounded.
Contact Detcon to optimize shielding and grounding.
Add Detcon's RFI Protection Circuit accessory if problem is proven RFI induced.

Nuisance Alarms

Check condulet for accumulated water and abnormal corrosion on terminal blocks.
If nuisance alarms are happening at night, suspect condensation in condulet.
Add or replace Detcon's Condensation Prevention Packet P/N 960-202200-000.
Investigate the presence of other target gasses that are causing cross-interference signals.
Determine if cause is RFI induced.

Processor and/or Memory Faults

Recycle power in attempt to clear problem
Restore Factory Defaults - This will clear the processor's memory and may correct problem.
Remember to re-enter all customer settings for range and cal gas level after Restore Factory Defaults.
If problem persists, replace the Intelligent Transmitter Module.

Unreadable Display

If due to excessive sunlight, install a sunshade to reduce glare.

Nothing Displayed – Transmitter not Responding

Verify condulet has no accumulated water or abnormal corrosion.
Verify required DC power is applied to correct terminals.
Swap with a known-good ITM to determine if ITM is faulty.

Faulty 4-20 mA Output

If Sensor has a normal reading with no Faults displayed, and the 4-20 mA signal output is 0mA….
Check that wiring is properly connected at terminal blocks and through to controller inputs.
The 4-20 output loop must be closed (resistance of < 1000 ohms) to avoid the Loop Fault.
Perform a "Signal Output Check" sequence via Section 3.5.5 and verify 4-20mA output with Current Meter.
Swap with new ITM to determine if the ITM's 4-20mA output circuit is faulty.

No Communication - RS-485 Modbus™

If sensor has a normal reading with no Faults displayed and the Modbus™ is not communicating….
Verify that the correct (and non-duplicated) serial address is entered (per Section 3.5.3).
Check that the wiring is properly connected at terminal blocks, and the serial loop is wired correctly.
Perform a "Signal Output Check" per Section 3.5.5 and troubleshoot wiring.
Consider adding a Modbus™ repeater if the distance from the nearest distribution drop is excessive.
Swap with new ITM to determine if the ITM's serial output circuit is faulty.
Refer to Detcon's "Guide to Proper Modbus™ Communications" Application Note.

7. Customer Support and Service Policy

Detcon Headquarters
Shipping Address: 3200 A-1 Research Forest Dr., The Woodlands Texas 77381
Mailing Address: P.O. Box 8067, The Woodlands Texas 77387-8067
Phone: 888.367.4286, or 281.367.4100
Fax: 281.292.2860

• www.detcon.com
• service@detcon.com
• sales@detcon.com

All Technical Service and Repair activities should be handled by the Detcon Service Department via phone, fax, or email at contact information given above. RMA numbers should be obtained from the Detcon Service Department prior to equipment being returned. For on-line technical service, customers should have ready the model number, part number, and serial number of product(s) in question.

All Sales activities (including spare parts purchase) should be handled by the Detcon Sales Department via phone, fax or email at contact information given above.

Warranty Notice

Detcon Inc. warrants the Model DM-700 toxic gas sensors to be free from defects in workmanship of material under normal use and service for two years from the date of shipment on the ITM electronics and for the conditional warranty period on the intelligent plug-in sensor type as listed in the Warranty column of Table 2 in Section 9.

Detcon Inc. will repair or replace without charge any such equipment found to be defective during the warranty period. Full determination of the nature of, and responsibility for, defective or damaged equipment will be made by Detcon Inc. personnel.

Defective or damaged equipment must be shipped to the Detcon Inc. factory or representative from which the original shipment was made. In all cases, this warranty is limited to the cost of the equipment supplied by Detcon Inc. The customer will assume all liability for the misuse of this equipment by its employees or other contracted personnel.

All warranties are contingent upon the proper use in the application for which the product was intended and does not cover products which have been modified or repaired without Detcon Inc. approval, or which have been subjected to neglect, accident, improper installation or application, or on which the original identification marks have been removed or altered.

Except for the express warranty stated above, Detcon Inc. disclaims all warranties with regard to the products sold. Including all implied warranties of merchantability and fitness and the express warranties stated herein are in lieu of all obligations or liabilities on the part of Detcon Inc. for damages including, but not limited to, consequential damages arising out of, or in connection with, the performance of the product.

8. DM-700 Sensor Warranty

Intelligent Plug-in Sensor Warranty

Detcon Inc. warrants, under normal intended use, each new intelligent plug-in sensor per the period specified in the Warranty column of Table 2 (See Section 9) and under the conditions described as follows: The warranty period begins on the date of shipment to the original purchaser. The sensor element is warranted to be free of defects in material and workmanship. Should any sensor fail to perform in accordance with published specifications within the warranty period, return the defective part to Detcon, Inc., 3200 A-1 Research Forest Dr., The Woodlands, Texas 77381, for necessary repairs or replacement.

Terms & Conditions

* The original serial number must be legible on each sensor element base.
* Shipping point is FOB the Detcon factory.
* Net payment is due within 30 days of invoice.
* Detcon, Inc. reserves the right to refund the original purchase price in lieu of sensor replacement.

ITM Electronics Warranty

Detcon Inc. warrants, under intended normal use, each new Model 700 ITM to be free from defects in material and workmanship for a period of two years from the date of shipment to the original purchaser. All warranties and service policies are FOB the Detcon facility located in The Woodlands, Texas.

Terms & Conditions

* The original serial number must be legible on each ITM.
* Shipping point is FOB the Detcon factory.
* Net payment is due within 30 days of invoice.
* Detcon, Inc. reserves the right to refund the original purchase price in lieu of ITM replacement.

9. Appendix

9.1 Specifications

System Specifications

Sensor Type:	Continuous diffusion/adsorption type 3-Electrode Electrochemical Sensor (2-Electrode for O_2) Plug-in Replaceable Intelligent Type
Sensor Life:	2 years typical
Measuring Ranges:	0-1 ppm up to 0-10,000 ppm (Toxic Gasses) 0-100 ppm up to 0-25% volume (O_2)
Accuracy/ Repeatability:	±10% of applied gas or +/- 2ppm, greater of (ISA 92.0.01 tested for H_2S) ±2% of full-range (other Toxic Gasses) ±1% of full-range (O_2)
Response Time:	T90 < 30 seconds typical (See Sensor Table)
Performance Testing:	Complies with ISA 92.0.01 Part 1-1998; Performance Requirements for H_2S
Electrical Classification:	CSA and US (NRTL) Class I, Division 1, Groups A, B, C, D ATEX Class I, Zone 1, Group IIC Eex d [ib] ib IIC T6
Approvals:	CSA_{US}, ATEX, CE Marking
Warranty:	Electronics – 2 years Sensor – (See Table 2)

Environmental Specifications

Operating Temperature:	-40°C to +50°C typical (See Table 2) (ISA 92.0.01 tested from -40°C to +50°C for H_2S)
Storage Temperature:	-35°C to +55°C typical
Operating Humidity:	10-95% RH Continuous Duty (See Table 2) (ISA 92.0.01 tested to 5-95% RH for H_2S) 0-100% RH Short-Term Duration Only
Operating Pressure:	Ambient ± 10%
Air Velocity:	0-5 meters/second

Electrical Specifications

Input Voltage:	11-30 VDC
Power Consumption:	Normal operation = 30mA (<0.75 watt); Maximum = 50mA (1.2 watts)

RFI/EMI Protection: Complies with EN61326

Analog Output: Linear 4-20mA DC current
1000 ohms maximum loop load @ 24VDC
0 mA All Fault Diagnostics
2 mA In-Calibration
4-20 mA 0-100% full-scale
22 mA Over-range condition

Serial Output: RS-485 Modbus™ RTU
Baud Rate 9600 BPS (9600,N,8,1 Half Duplex)

Status Indicators: 4-digit LED Display with gas concentration, full-script menu prompts for AutoSpan, Set-up Options, and Fault Reporting

Faults Monitored: Loop Fault, Input Voltage Fault, Missing Sensor Fault, Zero Fault, Processor Fault, Memory Fault, Calibration Fault(s)

Cable Requirements: Power/Analog: 3-wire shielded cable
Maximum distance is 13,300 feet with 14 AWG

Serial Output: 2-wire twisted-pair shielded cable specified for RS-485 use
Maximum distance is 4,000 feet to last sensor

Mechanical Specifications

Length: 7.6 inches (190 mm), Includes Splashguard

Width: 2.2 inches (55 mm)

Weight: 2.5 lbs (1.2 Kg)

Mechanical Connection: ¾" Male NPT threaded connection

Electrical Connection: Six 18 gauge wire leads - 5.5" long

Table 2 Sensor Specific Data

Gas	GasName	Part Number[1]	Response Time (seconds)	SpanDrift	Temperature Range °C	Humidity Range%	Warranty
O_2	Oxygen	377-343400-025	T95<30	<5%signal loss/year	-20 to+50	15 to 90	2 years
C_2H_3O	Acetyldehyde	377-12EA00-100	T90<140	<5%signal loss/year	-20 to+50	15 to 90	2 years
C_2H_2	Acetylene	377-12EG00-100	T90<140	<5%signal loss/year	-20 to+50	15 to 90	2 years
C_3H_3N	Acrylonitrile	377-12EM00-100	T90<140	<5%signal loss/year	-20 to+50	15 to 90	2 years
NH_3	Ammonia	377-505000-100	T90<90	<2%signal loss/month	-40 to+50	15 to 90	2 years
AsH_3	Arsine	377-191900-001	T90<60	<5%signal loss/month	-20 to+40	20 to 95	1.5 years
Br_2	Bromine	377-747500-005	T90<60	<2%signal loss/month	-20 to+50	15 to 90	2 years
C_4H_6	Butadiene	377-12EB00-100	T90<140	<5%signal loss/year	-20 to+50	15 to 90	2 years
CO	Carbon Monoxide	377-444400-100	T90=30	<5%signal loss/year	-40 to+50	15 to 90	3 years
Cl_2	Chlorine	377-747400-010	T90<60	<2%signal loss/month	-20 to+50	15 to 90	2 years
ClO_2 (>10ppm)	Chlorine Dioxide	377-777700-001	T90<60	<2%signal loss/month	-20 to+50	15 to 90	2 years
ClO_2 (<=10ppm)	Chlorine Dioxide	377-282800-050	T90<120	<1%signal loss/month	-20 to+40	10 to 95	2 years

[1] The last three digits of the Part Number are the range of the sensor cell. I.E. "-100" is a 100ppm range.

Gas	GasName	Part Number[1]	Response Time (seconds)	SpanDrift	Temperature Range °C	Humidity Range%	Warranty
B_2H_6	Diborane	377-192100-005	T90<60	<5%signal loss/month	-20 to+40	20 to 95	1.5 years
C_2H_5OH	Ethanol	377-12EO00-100	T90<140	<5%signal loss/year	-20 to+50	15 to 90	2 years
C_2H_5SH	Ethyl Mercaptan	377-24EZ00-100	T90<45	<2%signal loss/month	-40 to+50	15 to 90	2 years
C_2H_4	Ethylene	377-12ED00-100	T90<140	<5%signal loss/year	-20 to+50	15 to 90	2 years
C_2H_4O	Ethylene Oxide	377-12EJ00-100	T90<140	<5%signal loss/year	-20 to+50	15 to 90	2 years
F_2	Fluorine	377-272700-001	T90<80	<5%signal loss/year	-10 to+40	10 to 95	1.5 years
CH_2O	Formaldehyde	377-12EP00-100	T90<140	<5%signal loss/year	-20 to+50	15 to 90	2 years
GeH_4	Germane	377-232500-002	T90<60	<1%signal loss/month	-20 to+40	20 to 95	1.5 years
N_2H_4	Hydrazine	377-262600-001	T90<120	<5%signal loss/month	-10 to+40	10 to 95	1 year
H_2 (ppm)	Hydrogen	377-848400-100	T90=30	<2%signal loss/month	-20 to+50	15 to 90	2 years
H_2 (LEL)*	Hydrogen	377-050500-04P	T90<60	<2%signal loss/month	-40 to+40	5 to 95	2 years
HBr	Hydrogen Bromide	377-090800-030	T90<70	<3%signal loss/month	-20 to+40	10 to 95	1.5 years
HCl	Hydrogen Chloride	377-090900-030	T90<70	<2%signal loss/month	-20 to+40	10 to 95	1.5 years
HCN	Hydrogen Cyanide	377-131300-030	T90<40	<5%signal loss/month	-40 to+40	5 to 95	2 years
HF	Hydrogen Fluoride	377-333300-010	T90<90	<10%signal loss/month	-20 to+35	10 to 80	1.5 years
H_2S	Hydrogen Sulfide	377-242400-100	T80<30	<2%signal loss/month	-40 to+50	15 to 90	2 years
CH_3OH	Methanol	377-12EE00-100	T90<140	<5%signal loss/year	-20 to+50	15 to 90	2 years
CH_3SH	Methyl Mercaptan	377-24EK00-100	T90<45	<2%signal loss/month	-40 to+50	15 to 90	2 years
NO	Nitric Oxide	377-949400-100	T90=10	<2%signal loss/month	-20 to+50	15 to 90	3 years
NO_2	Nitrogen Dioxide	377-646400-010	T90<40	<2%signal loss/month	-20 to+50	15 to 90	2 years
O_3	Ozone	377-999900-001	T90<120	<1%signal loss/month	-10 to+40	10 to 95	2 years
$COCl_2$	Phosgene	377-414100-001	T90<120	<1%signal loss/month	-20 to+40	10 to 95	1.5 years
PH3	Phosphine	377-192000-005	T90<30	<1%signal loss/month	-20 to+40	20 to 95	1.5 years
SiH_4	Silane	377-232300-050	T90<60	<1%signal loss/month	-20 to+40	20 to 95	1.5 years
SO_2	SulfurDioxide	377-555500-020	T90=20	<2%signal loss/month	-20 to+50	15 to 90	2 years
$C_4H_6O_2$	Vinyl Acetate	377-12EF00-100	T90<140	<5%signal loss/year	-20 to+50	15 to 90	2 years
C_2H_3Cl	Vinyl Chloride	377-12EL00-100	T90<140	<5%signal loss/year	-20 to+50	15 to 90	2 years

9.2 Interference Table

Reference Table 3 to match the interfering gas symbol with the gas name. Then refer to Table 4. The Cross Interfering Gas Table extends for 5 pages, with each sensor specific gas repeated in each section of the table, for a column listing of 40 gasses. The list is followed by a row of 14 possible interfering gasses per page. Review each page for the applicable sensor gas and then scan across the row for possible interference gasses.

Table 3 Interfering Gasses

Acetyldehyde	C_2H_3O	Dimethyl Sulfide	C_2H_6S	Methane	CH_4
Acetylene	C_2H_2	Disilane	Si_2H_6	Methanol	CH_3OH
Acrylonitrile	C_3H_3N	Epichlorohydrin	C_3H_5OCl	Methyl-ethyl-ketone	C_4H_8O
Alcohols	Alcohols	Ethanol	C_2H_5OH	Methyl Mercaptan	CH_3SH
Amines	Amines	Ethyl Mercaptan	C_2H_5SH	Nitric Oxide	NO
Ammonia	NH_3	Ethylene	C_2H_4	Nitrogen	N_2
Arsenic Triflouride	AsF_3	Ethylene Oxide	C_2H_4O	Nitrogen Dioxide	NO_2
Arsenic Pentaflouride	AsF_5	Fluorine	F_2	Ozone	O_3
Arsine	AsH_3	Formaldehyde	CH_2O	Phosgene	$COCl_2$
Boron Triflouride	BF_3	Germane	GeH_4	Phosphine	PH_3
Bromine	Br_2	Hydrazine	N_2H_4	Phosphorous Triflouride	PF_3
Butadiene	C_4H_6	Hydrocarbons	C-H's	Silane	SiH_4
Buten-1	Buten-1	Hydrocarbons (unsaturated)	C-H's (μ)	Silicon	Si
Carbon Dioxide	CO_2	Hydrogen	H_2	Silicon Tetra Fluoride	SiF_4
Carbon Disulfide	CS_2	Hydrogen Bromide	HBr	Sulfur Dioxide	SO_2
Carbon Oxide Sulfide	COS	Hydrogen Chloride	HCl	Tetrahydrothiophene	C_4H_8S
Carbon Monoxide	CO	Hydrogen Cyanide	HCN	Thiophane	C_4H_4S

Carbonyl Sulfide	CS	Hydrogen Fluoride	HF	Toluene	$C_6H_5CH_3$
Chlorine	Cl_2	Hydrogen Selenide	HSe	Tungsten Hexafluoride	WF_6
Chlorine Dioxide	ClO_2	Hydrogen Sulfide	H_2S	Vinyl Acetate	$C_4H_6O_2$
Chlorine Trifluoride	ClF_3	Dimethyl Sulfide	C_2H_6S	Vinyl Chloride	C_2H_3Cl
Diborane	B_2H_6	Disilane	Si_2H_7		

Table 4 Cross Interference Table pg.1

Gas	C_2H_3O	C_2H_2	C_3H_3N	Alcohols	Amines	NH_3	AsF_3	AsF_5	AsH_3	BF_3	Br_2	C_4H_6	Buten-1
C_2H_3O	n/a	40=340	40=75	n/d	n/d	n/d	n/d	n/d	n/d	n/d	n/d	40=170	n/d
C_2H_2	340=40	n/a	340=75	n/d	n/d	n/d	n/d	n/d	n/d	n/d	n/d	340=170	n/d
C_3H_3N	75=40	75=340	n/a	n/d	n/d	n/d	n/d	n/d	n/d	n/d	n/d	75=170	n/d
NH_3	n/d	n/d	n/d	n/d	n/d	n/d	n/d	n/d	n/d	n/d	n/d	n/d	n/d
AsH_3	n/d	n/d	n/d	n/d	n/d	100=0.01	n/d	n/d	n/a	n/d	n/d	n/d	n/d
Br_2	n/d	n/d	n/d	n/d	n/d	n/d	n/d	n/d	n/d	n/d	n/a	n/d	n/d
C_4H_6	170=40	170=340	170=75	n/d	n/d	n/d	n/d	n/d	n/d	n/d	n/d	n/a	n/d
CS_2	140=40	140=340	140=75	n/d	n/d	n/d	n/d	n/d	n/d	n/d	n/d	140=170	n/d
CO	n/d	n/d	n/d	n/d	n/d	n/d	n/d	n/d	n/d	n/d	n/d	n/d	n/d
Cl_2	n/d	n/d	n/d	n/d	n/d	n/d	n/d	n/d	n/d	n/d	1=0.55	n/d	n/d
ClO_2 (>10ppm)	n/d	n/d	n/d	n/d	n/d	n/d	n/d	n/d	n/d	n/d	1=0.18	n/d	n/d
ClO_2 (=10ppm)	n/d	n/d	n/d	n/d	n/d	n/d	n/d	n/d	n/d	n/d	n/d	n/d	n/d
B_2H_6	n/d	n/d	n/d	n/d	n/d	100=0.013	n/d	n/d	0.15=0.2	n/d	n/d	n/d	n/d
C_3H_5OCl	50=40	50=340	50=75	n/d	n/d	n/d	n/d	n/d	n/d	n/d	n/d	50=170	n/d
C_2H_5OH	180=40	180=340	180=75	n/d	n/d	n/d	n/d	n/d	n/d	n/d	n/d	180=170	n/d
C_2H_5SH	n/d	n/d	n/d	n/d	n/d	n/d	n/d	n/d	n/d	n/d	n/d	n/d	n/d
C_2H_4	220=40	220=340	220=75	n/d	n/d	n/d	n/d	n/d	n/d	n/d	n/d	220=170	n/d
C_2H_4O	275=40	275=340	275=75	n/d	n/d	n/d	n/d	n/d	n/d	n/d	n/d	275=170	n/d
F_2	n/d	n/d	n/d	1000=0	n/d	n/d	n/d	n/d	0.1=0	n/d	yes n/d	n/d	n/d
CH_2O	330=40	330=340	330=75	n/d	n/d	n/d	n/d	n/d	n/d	n/d	n/d	330=170	n/d
GeH_4	n/d	n/d	n/d	n/d	n/d	100=<1	n/d	n/d	0.2=0.14	n/d	n/d	n/d	n/d
N_2H_4	n/d	n/d	n/d	1000=0	n/d	200=0.04	n/d	n/d	0.1=0.1	n/d	n/d	n/d	n/d
H_2 (ppm)	n/d	n/d	n/d	n/d	n/d	n/d	n/d	n/d	n/d	n/d	n/d	n/d	n/d
H_2 (LEL)	n/d	n/d	n/d	n/d	n/d	100=0	n/d	n/d	n/d	n/d	n/d	n/d	n/d
HBr	n/d	n/d	n/d	1000=0	no	n/d	n/d	n/d	0.1=0.3	n/d	n/d	n/d	n/d
HCl	n/d	n/d	n/d	1000=0	no	n/d	n/d	n/d	0.1=0.3	n/d	n/d	n/d	n/d
HCN	n/d	n/d	n/d	1000=0	n/d	n/d	n/d	n/d	0.1=0	n/d	yes n/d	n/d	n/d
HF	n/d	n/d	n/d	1000=0	n/d	n/d	yes n/d	yes n/d	0.1=0	yes n/d	n/d	n/d	n/d
H_2S	n/d	n/d	n/d	n/d	n/d	n/d	n/d	n/d	n/d	n/d	n/d	n/d	n/d
CH_3OH	415=40	415=340	415=75	n/d	n/d	n/d	n/d	n/d	n/d	n/d	n/d	415=170	n/d
CH_3SH	n/d	n/d	n/d	n/d	n/d	n/d	n/d	n/d	n/d	n/d	n/d	275=170	n/d
NO	n/d	n/d	n/d	n/d	n/d	n/d	n/d	n/d	n/d	n/d	n/d	n/d	n/d
NO_2	n/d	n/d	n/d	n/d	n/d	n/d	n/d	n/d	n/d	n/d	n/d	n/d	n/d
O_3	n/d	n/d	n/d	n/d	n/d	n/d	n/d	n/d	0.1=0.05	n/d	yes n/d	n/d	n/d
$COCl_2$	n/d	n/d	n/d	1000=0	n/d	50=0.5	n/d	n/d	n/d	n/d	n/d	n/d	n/d
PH_3	n/d	n/d	n/d	n/d	n/d	100=0.01	n/d	n/d	1=1	n/d	n/d	n/d	n/d
SiH_4	n/d	n/d	n/d	n/d	n/d	100=<1	n/d	n/d	0.2=0.14	n/d	n/d	n/d	n/d
SO_2	n/d	n/d	n/d	n/d	n/d	n/d	n/d	n/d	n/d	n/d	n/d	n/d	n/d
$C_4H_6O_2$	200=40	200=340	200=75	n/d	n/d	n/d	n/d	n/d	n/d	n/d	n/d	200=170	n/d
C_2H_3Cl	200=40	200=340	200=75	n/d	n/d	n/d	n/d	n/d	n/d	n/d	n/d	200=170	n/d

n/a – not applicable
n/d – no data

Table 4 Cross Interference Gasses pg.2

Gas	CO_2	CS_2	CO	COS	CL_2	CLO_2	CLF_3	B_2H_6	C_2H_6S	Si_2H_6	C_3H_5OCL	C_2H_5OH	F_2
C_2H_3O	n/d	40=140	40=100	40=135	n/d	n/d	n/d	n/d	40=150	n/d	40=50	40=180	n/d
C_2H_2	n/d	340=140	340=100	340=135	n/d	n/d	n/d	n/d	340=150	n/d	340=50	340=180	n/d
C_3H_3N	n/d	75=140	75=100	75=135	n/d	n/d	n/d	n/d	75=150	n/d	75=50	75=180	n/d
NH_3	n/d	n/d	300=8	n/d	1=-1	10%=-15	n/d	n/d	n/d	n/d	n/d	n/d	n/d
AsH_3	5000=0	n/d	300=0	n/d	0.5=-0.04	n/d	n/d	0.2=0.15	n/d	5=yes n/d	n/d	n/d	n/d
Br_2	n/d	n/d	300=0	n/d	1=2	1=6	n/d	n/d	n/d	n/d	n/d	n/d	n/d
C_4H_6	n/d	170=140	170=100	170=135	n/d	n/d	n/d	n/d	170=150	n/d	170=50	170=180	n/d
CS_2	n/d	n/a	140=100	140=135	n/d	n/d	n/d	n/d	140=150	n/d	140=50	140=180	n/d
CO	n/d	n/d	n/a	n/d	1=0	n/d	n/d	n/d	n/d	n/d	n/d	200=0	n/d
Cl_2	n/d	n/d	300=0	n/d	n/a	n/d	n/d	n/d	n/d	n/d	n/d	n/d	n/d
ClO_2 (>10ppm)	n/d	n/d	300=0	n/d	3=1	n/a	n/d	n/d	n/d	n/d	n/d	n/d	n/d
ClO_2 (=10ppm)	5000=0	n/d	1000=0	n/d	1=0.9	n/a	yes n/d	0.1=0	n/d	n/d	n/d	n/d	yes n/d
B_2H_6	5000=0	n/d	300=0	n/d	0.5=-0.05	n/d	n/d	n/a	n/d	5=yes n/d	n/d	n/d	n/d
C_3H_5OCl	n/d	50=140	50=100	50=135	n/d	n/d	n/d	n/d	50=150	n/d	n/a	50=180	n/d
C_2H_5OH	n/d	180=140	180=100	180=135	n/d	n/d	n/d	n/d	180=150	n/d	180=50	n/a	n/d
C_2H_5SH	n/d	n/d	300=5	n/d	1=-0.6	n/d	n/d	n/d	n/d	n/d	n/d	n/d	n/d
C_2H_4	n/d	220=140	220=100	220=135	n/d	n/d	n/d	n/d	220=150	n/d	220=50	220=180	n/d
C_2H_4O	n/d	275=140	275=100	275=135	n/d	n/d	n/d	n/d	275=150	n/d	275=50	275=180	n/d
F_2	5000=0	n/d	1000=0	n/d	1=1.3	n/d	n/d	n/d	n/d	n/d	n/d	n/d	n/a
CH_2O	n/d	330=140	330=100	330=135	n/d	n/d	n/d	n/d	330=150	n/d	330=50	330=180	n/d
GeH_4	5000=0	n/d	300=0	n/d	0.5=-0.04	n/d	n/d	0.2=0.11	n/d	5=yes n/d	n/d	n/d	n/d
N_2H_4	5000=0	n/d	1000=0	n/d	1=0	n/d	n/d	n/d	n/d	n/d	n/d	n/d	n/d
H_2 (ppm)	n/d	n/d	300=<30	n/d	1=0	n/d	n/d	n/d	n/d	n/d	n/d	n/d	n/d
H_2 (LEL)	1000=0	n/d	50=6	n/d	5=0	n/d	n/d	n/d	n/d	n/d	n/d	n/d	n/d
HBr	5000=0	n/d	1000=0	n/d	5=1	n/d	yes n/d	n/d	n/d	n/d	n/d	n/d	n/d
HCl	5000=0	n/d	1000=0	n/d	5=1	n/d	1=yes n/d	n/d	n/d	n/d	n/d	n/d	n/d
HCN	5000=0	n/d	1000=0	n/d	5=-1	n/d	n/d	n/d	n/d	n/d	n/d	n/d	n/d
HF	5000=0	n/d	1000=0	n/d	1=0.4	n/d	yes n/d	0.1=0	n/d	n/d	n/d	n/d	yes n/d
H_2S	n/d	n/d	300==1.5	n/d	1=¯-0.2	n/d	n/d	n/d	n/d	n/d	n/d	n/d	n/d
CH_3OH	n/d	415=140	415=100	415=135	n/d	n/d	n/d	n/d	415=150	n/d	415=50	415=180	n/d
CH_3SH	n/d	n/d	300=3	n/d	1=-0.4	n/d	n/d	n/d	n/d	n/d	n/d	n/d	n/d
NO	n/d	n/d	300=0	n/d	1=0	n/d	n/d	n/d	n/d	n/d	n/d	n/d	n/d
NO_2	n/d	n/d	300=0	n/d	1=¯1	n/d	n/d	n/d	n/d	n/d	n/d	n/d	n/d
O_3	5000=0	n/d	300=0	n/d	1=1.4	0.1=0.12	1=1(theory	n/d	n/d	n/d	n/d	n/d	0.1=0.07
$COCl_2$	5000=0	n/d	1000=0	n/d	1=0	n/d	n/d	n/d	n/d	n/d	n/d	n/d	n/d
PH_3	5000=0	n/d	300=0	n/d	0.5=-0.04	n/d	n/d	0.2=0.15	n/d	5=yes n/d	n/d	n/d	n/d
SiH_4	5000=0	n/d	300=0	n/d	0.5=-0.04	n/d	n/d	0.2=0.11	n/d	5=yes n/d	n/d	n/d	n/d
SO_2	n/d	n/d	300=<5	n/d	1=<0.5	n/d	n/d	n/d	n/d	n/d	n/d	n/d	n/d
$C_4H_6O_2$	n/d	200=140	200=100	200=135	n/d	n/d	n/d	n/d	200=150	n/d	200=50	200=180	n/d
C_2H_3Cl	n/d	200=140	1250=100	200=135	n/d	n/d	n/d	n/d	200=150	n/d	200=50	200=180	n/d

n/a – not applicable
n/d – no data

Table 4 Cross Interference Gasses pg.3

Gas	C_2H_4	C_2H_4O	CH_2O	GeH_4	N_2H_4	C-H's	C-H's (U)	H_2	HBr	HCL	HCN	HF	I_2
C_2H_3O	40=220	40=275	40=330	N/d	n/d	n/d	n/d	n/d	n/d	n/d	n/d	n/d	n/d
C_2H_2	340=220	340=275	340=330	N/d	n/d	n/d	n/d	n/d	n/d	n/d	n/d	n/d	n/d
C_3H_3N	75=220	75=275	75=330	N/d	n/d	n/d	n/d	n/d	n/d	n/d	n/d	n/d	n/d
NH_3	100=0	n/d	n/d	N/d	n/d	n/d	n/d	200=4	n/d	5=-3	10=0	n/d	n/d
AsH_3	n/d	n/d	n/d	1=0.4	n/d	%range=0	n/d	3000=0	n/d	5=0	10=0.1	4=0	n/d
Br_2	100=0	n/d	n/d	N/d	n/d	n/d	n/d	100=0	n/d	5=0	10=0	n/d	n/d
C_4H_6	170=220	170=275	170=330	N/d	n/d	n/d	n/d	n/d	n/d	n/d	n/d	n/d	n/d
CS_2	140=220	140=275	140=330	N/d	n/d	n/d	n/d	n/d	n/d	n/d	n/d	n/d	n/d
CO	100=<100	n/d	n/d	N/d	n/d	n/d	n/d	100=<60	n/d	5=0	10=<2	n/d	n/d
Cl_2	100=0	n/d	n/d	N/d	n/d	n/d	n/d	100=0	n/d	5=0	10=0	n/d	n/d
ClO_2 (>10ppm)	100=0	n/d	n/d	N/d	n/d	n/d	n/d	100=0	n/d	5=0	10=0	n/d	n/d
ClO_2 (=10ppm)	n/d	n/d	n/d	1=0	n/d	%range=0	n/d	1%=0	n/d	n/d	n/d	n/d	n/d
B_2H_6	n/d	n/d	n/d	1=0.53	n/d	%range=0	n/d	3000=0	n/d	5=0	10=0.13	4=0	n/d
C_3H_5OCl	50=220	50=275	50=330	N/d	n/d	n/d	n/d	n/d	n/d	n/d	n/d	n/d	n/d
C_2H_5OH	180=220	180=275	180=330	N/d	n/d	n/d	n/d	n/d	n/d	n/d	n/d	n/d	n/d
C_2H_5SH	100=0	n/d	n/d	N/d	n/d	n/d	n/d	1%=<15	n/d	5=0	10=0	n/d	n/d
C_2H_4	n/a	220=275	220=330	n/d	n/d	n/d	n/d	n/d	n/d	n/d	n/d	n/d	n/d
C_2H_4O	275=220	n/a	275=330	n/d	n/d	n/d	n/d	n/d	n/d	n/d	n/d	n/d	n/d
F_2	n/d	n/d	n/d	n/d	n/d	%range=0	n/d	1%=0	n/d	5=0	1=-3	3=0	n/d
CH_2O	330=220	330=275	n/a	n/d	n/d	n/d	n/d	n/d	n/d	n/d	n/d	n/d	n/d
GeH_4	n/d	n/d	n/d	n/a	n/d	%range=0	n/d	3000=0	n/d	5=0	10=1	4=0	n/d
N_2H_4	n/d	n/d	n/d	n/d	n/a	%range=0	n/d	1000=0	n/d	5=0.1	n/d	3=0	n/d
H_2 (ppm)	100=˜80	n/d	n/d	n/d	n/d	n/d	n/d	n/a	n/d	5=0	10=˜3	n/d	n/d
H_2 (LEL)	yes n/d	n/d	n/d	n/d	n/d	n/d	n/d	n/a	n/d	n/d	10=0	n/d	n/d
HBr	n/d	n/d	n/d	n/d	n/d	%range=0	n/d	1%=0	n/a	1=1	15=1	3=0	n/d
HCl	n/d	n/d	n/d	1=n/d	n/d	%range=0	n/d	1%=0	1=1	n/a	15=1	3=0	n/d
HCN	n/d	n/d	n/d	n/d	n/d	%range=0	n/d	1000=0	n/d	5=0	n/a	3=0	n/d
HF	n/d	n/d	n/d	1=0	n/d	%range=0	n/d	1%=0	n/d	5=3.3	n/d	n/a	n/d
H_2S	100=0	n/d	n/d	n/d	n/d	n/d	n/d	1%=<5	n/d	5=0	10=0	n/d	n/d
CH_3OH	415=220	415=275	415=330	n/d	n/d	n/d	n/d	n/d	n/d	n/d	n/d	n/d	n/d
CH_3SH	100=0	n/d	n/d	n/d	n/d	n/d	n/d	1%=<10	n/d	5=0	10=0	n/d	n/d
NO	100=0	n/d	n/d	n/d	n/d	n/d	n/d	100=0	n/d	5=<1	10=0	n/d	n/d
NO_2	100=0	n/d	n/d	n/d	n/d	n/d	n/d	100=0	n/d	5=0	10=0	n/d	n/d
O_3	n/d	n/d	n/d	n/d	n/d	n/d	n/d	1%=0.003	n/d	10=0	10=0.03	5=0	yes n/d
$COCl_2$	n/d	n/d	n/d	n/d	n/d	%range=0	n/d	1%=0	n/d	5=0	5=0	3=0	n/d
PH_3	n/d	n/d	n/d	1=0.4	n/d	%range=0	n/d	3000=0	n/d	5=0	10=0.1	4=0	n/d
SiH_4	n/d	n/d	n/d	1=1.0	n/d	%range=0	n/d	3000-=0	n/d	5=0	10=1	4=0	n/d
SO_2	100=0	n/d	n/d	n/d	n/d	n/d	n/d	100=0	n/d	5=0	10=<5	n/d	n/d
$C_4H_6O_2$	200=220	200=275	200=330	n/d	n/d	n/d	n/d	n/d	n/d	n/d	n/d	n/d	n/d
C_2H_3Cl	200=220	200=275	200=330	n/d	n/d	n/d	n/d	n/d	n/d	n/d	n/d	n/d	n/d

n/a – not applicable
n/d – no data

Table 4 Cross Interference Gasses pg.4

Gas	HSe	H_2S	C_3H_8O	CH_4	CH_3OH	C_4H_8O	CH_3SH	NO	N_2	NO_2	O_3	$COCL_2$	PH_3
C_2H_3O	n/d	n/d	n/d	n/d	40=415	n/d	40=275	n/d	n/d	n/d	n/d	n/d	n/d
C_2H_2	n/d	n/d	n/d	n/d	340=415	n/d	340=275	n/d	n/d	n/d	n/d	n/d	n/d
C_3H_3N	n/d	n/d	n/d	n/d	75=415	n/d	75=275	n/d	n/d	n/d	n/d	n/d	n/d
NH_3	n/d	15=30	n/d	n/d	n/d	n/d	n/d	35=6	n/d	5=-1	n/d	n/d	n/d
AsH_3	0.05=0.005	1=0	n/d	n/d	n/d	n/d	n/d	n/d	100%=0	n/d	n/d	n/d	0.1=0.11
Br_2	n/d	15=-1.5	n/d	n/d	n/d	n/d	n/d	35=0	n/d	5=¯10	n/d	n/d	n/d
C_4H_6	n/d	n/d	n/d	n/d	170=415	n/d	170=275	n/d	n/d	n/d	n/d	n/d	n/d
CS_2	n/d	n/d	n/d	n/d	140=415	n/d	140=275	n/d	n/d	n/d	n/d	n/d	n/d
CO	n/d	15=<0.3	n/d	n/d	n/d	n/d	n/d	35==7	n/d	5=0.5	n/d	n/d	n/d
Cl_2	n/d	15=-0.75	n/d	n/d	n/d	n/d	n/d	35=0	n/d	5=¯5	n/d	n/d	n/d
ClO_2 (>10ppm)	n/d	15=0.25	n/d	n/d	n/d	n/d	n/d	35=0	n/d	5=1.66	n/d	n/d	n/d
ClO_2 (=10ppm)	n/d	10=-0.015	n/d	n/d	n/d	n/d	n/d	n/d	n/d	yes n/d	yes n/d	n/d	n/d
B_2H_6	0.05=0.006	1=0	n/d	n/d	n/d	n/d	n/d	n/d	100%=0	n/d	n/d	n/d	0.1=0.14
C_3H_5OCl	n/d	n/d	n/d	n/d	50=415	n/d	50=275	n/d	n/d	n/d	n/d	n/d	n/d
C_2H_5OH	n/d	n/d	n/d	n/d	180=415	n/d	180=275	n/d	n/d	n/d	n/d	n/d	n/d
C_2H_5SH	n/d	1:03	n/d	n/d	n/d	n/d	5=8	35=<6	n/d	5=-1.5	n/d	n/d	n/d
C_2H_4	n/d	n/d	n/d	n/d	220=415	n/d	220=275	n/d	n/d	n/d	n/d	n/d	n/d
C_2H_4O	n/d	n/d	n/d	n/d	275=415	n/d	275=275	n/d	n/d	n/d	n/d	n/d	n/d
F_2	n/d	1=-1.5	n/d	n/d	n/d	n/d	n/d	n/d	100%=0	1=0.05	0.1=0.2	n/d	n/d
CH_2O	n/d	n/d	n/d	n/d	330=415	n/d	330=275	n/d	n/d	n/d	n/d	n/d	n/d
GeH_4	0.05=0.005	1=0	n/d	n/d	n/d	n/d	n/d	n/d	100%=0	n/d	n/d	n/d	0.1=0.13
N_2H_4	n/d	1=0.1	n/d	n/d	n/d	n/d	n/d	n/d	100%=0	1=-0.25	0.1=-0.1	n/d	0.3=0.1
H_2 (ppm)	n/d	15=<3	n/d	n/d	n/d	n/d	n/d	35=¯10	n/d	5=0	n/d	n/d	n/d
H_2 (LEL)	n/d	n/d	yes n/d	1%=0	n/d	n/d	n/d	yes n/d	n/d	10=0	n/d	n/d	n/d
HBr	0.1=0	10=2.75	n/d	n/d	n/d	n/d	n/d	n/d	100%=0	n/d	n/d	0.1=0	0.1=0.3
HCl	0.1=0	10=2.75	n/d	n/d	n/d	n/d	n/d	n/d	100%=0	n/d	n/d	0.1=0	0.1=0.3
HCN	n/d	10=0	n/d	n/d	n/d	n/d	n/d	n/d	100%=0	10=-12	0.1=0	n/d	0.3=0
HF	n/d	10=0	n/d	n/d	n/d	n/d	n/d	n/d	100%=0	10¯0.1	n/d	n/d	0.1=0
H_2S	n/d	n/a	n/d	n/d	n/d	n/d	2:01	35=<2	n/d	5=-0.5	n/d	n/d	n/d
CH_3OH	n/d	n/d	n/d	n/d	n/a	n/d	415=275	n/d	n/d	n/d	n/d	n/d	n/d
CH_3SH	n/d	1:02	n/d	n/d	n/d	n/d	n/a	35=<4	n/d	5=-1.0	n/d	n/d	n/d
NO	n/d	15=¯5	n/d	n/d	n/d	n/d	n/d	100=0	n/d	5=<1.5	n/d	n/d	n/d
NO_2	n/d	15=-0.75	n/d	n/d	n/d	n/d	n/d	35=0	n/d	n/a	n/d	n/d	n/d
O_3	n/d	1=-.015	n/d	n/d	n/d	n/d	n/d	10=0	100%=0	1=0.7	n/a	n/d	0.3=0.03
$COCl_2$	n/d	1=0	n/d	n/d	n/d	n/d	n/d	n/d	100%=0	n/d	n/d	n/a	0.3=0
PH_3	0.05=0.005	1=0	n/d	n/d	n/d	n/d	n/d	n/d	100%=0	n/d	n/d	n/d	n/a
SiH_4	0.05=0.005	1=0	n/d	n/d	n/d	n/d	n/d	n/d	100%=0	n/d	n/d	n/d	0.1=0.13
SO_2	n/d	15=0	n/d	n/d	n/d	n/d	n/d	35=0	n/d	5=¯-5	n/d	n/d	n/d
$C_4H_6O_2$	n/d	n/d	n/d	n/d	200=415	n/d	200=275	n/d	n/d	n/d	n/d	n/d	n/d

C_2H_3Cl	n/d	n/d	n/d	n/d	200=415	n/d	200=275	n/d	n/d	n/d	n/d	n/d	n/d

n/a – not applicable
n/d – no data

Table 4 Cross Interference Gasses pg.5

Gas	PF_3	SiH_4	Si	SiF_4	SO_2	C_4H_8S	C_4H_4S	C_6H5CH_3	WF_6	$C_4H_6O_2$	C_2H_3CL	C_2H_5SH	$C_6H_5CH_3$
C_2H_3O	n/d	n/d	n/d	n/d	n/d	n/d	40=45	n/d	n/d	40=200	40=200	n/d	40=55
C_2H_2	n/d	n/d	n/d	n/d	n/d	n/d	340=45	n/d	n/d	340=200	340=200	n/d	340=55
C_3H_3N	n/d	n/d	n/d	n/d	n/d	n/d	75=45	n/d	n/d	75=200	75=200	n/d	75=55
NH_3	n/d	n/d	n/d	n/d	5=-0.5	n/d	n/d	n/d	n/d	n/d	n/d	n/d	n/d
AsH_3	n/d	1=0.56	n/d	n/d	2=0	n/d	n/d	n/d	n/d	n/d	n/d	n/d	n/d
Br_2	n/d	n/d	n/d	n/d	5=-0.1	n/d	n/d	n/d	n/d	n/d	n/d	n/d	n/d
C_4H_6	n/d	n/d	n/d	n/d	n/d	n/d	170=45	n/d	n/d	170=200	170=200	n/d	170=55
CS_2	n/d	n/d	n/d	n/d	n/d	n/d	140=45	n/d	n/d	140=200	140=200	n/d	140=55
CO	n/d	n/d	n/d	n/d	5=0	n/d	n/d	n/d	n/d	n/d	n/d	n/d	n/d
Cl_2	n/d	n/d	n/d	n/d	5=-0.05	n/d	n/d	n/d	n/d	n/d	n/d	n/d	n/d
ClO_2 (>10ppm)	n/d	n/d	n/d	n/d	5=-0.016	n/d	n/d	n/d	n/d	n/d	n/d	n/d	n/d
ClO_2 (=10ppm)	n/d	n/d	n/d	n/d	n/d	n/d	n/d	n/d	n/d	n/d	n/d	n/d	n/d
B_2H_6	n/d	1=0.72	n/d	n/d	2=0	n/d	n/d	n/d	n/d	n/d	n/d	n/d	n/d
C_3H_5OCl	n/d	n/d	n/d	n/d	n/d	n/d	50=45	n/d	n/d	50=200	50=200	n/d	50=55
C_2H_5OH	n/d	n/d	n/d	n/d	n/d	n/d	180=45	n/d	n/d	180=200	180=200	n/d	180=55
C_2H_5SH	n/d	n/d	n/d	n/d	5=<3	n/d	n/d	n/d	n/d	n/d	n/d	n/a	n/d
C_2H_4	n/d	n/d	n/d	n/d	n/d	n/d	220=45	n/d	n/d	220=200	220=200	n/d	220=55
C_2H_4O	n/d	n/d	n/d	n/d	n/d	n/d	275=45	n/d	n/d	275=200	275=200	n/d	275=55
F_2	n/d	n/d	n/d	n/d	2=0	n/d	n/d	n/d	n/d	n/d	n/d	n/d	n/d
CH_2O	n/d	n/d	n/d	n/d	n/d	n/d	330=45	n/d	n/d	330=200	330=200	n/d	330=55
GeH_4	n/d	1=1	n/d	n/d	2=0	n/d	n/d	n/d	n/d	n/d	n/d	n/d	n/d
N_2H_4	n/d	n/d	n/d	n/d	2=0	n/d	n/d	n/d	n/d	n/d	n/d	n/d	n/d
H_2 (ppm)	n/d	n/d	n/d	n/d	5=0	n/d	n/d	n/d	n/d	n/d	n/d	n/d	n/d
H_2 (LEL)	n/d	n/d	n/d	n/d	2=0	n/d	n/d	n/d	n/d	n/d	n/d	n/d	n/d
HBr	n/d	n/d	n/d	n/d	5=2.5	n/d	n/d	n/d	n/d	n/d	n/d	n/d	n/d
HCl	n/d	n/d	n/d	n/d	5=2.5	n/d	n/d	n/d	n/d	n/d	n/d	n/d	n/d
HCN	n/d	n/d	n/d	n/d	2=0	n/d	n/d	n/d	n/d	n/d	n/d	n/d	n/d
HF	yes n/d	n/d	n/d	3=4(theory)	yes n/d	n/d	n/d	n/d	yes n/d	n/d	n/d	n/d	n/d
H_2S	n/d	n/d	n/d	n/d	5=<1	n/d	n/d	n/d	n/d	n/d	n/d	3=1	n/d
CH_3OH	n/d	n/d	n/d	n/d	n/d	n/d	415=45	n/d	n/d	415=200	415=200	n/d	413=55
CH_3SH	n/d	n/d	n/d	n/d	5=<2	n/d	n/d	n/d	n/d	n/d	n/d	2=1	n/d
NO	n/d	n/d	n/d	n/d	5=0	n/d	n/d	n/d	n/d	n/d	n/d	n/d	n/d
NO_2	n/d	n/d	n/d	n/d	5=-0.025	n/d	n/d	n/d	n/d	n/d	n/d	n/d	n/d
O_3	n/d	1=0.015	n/d	n/d	2=0	n/d	n/d	n/d	n/d	n/d	n/d	n/d	n/d
$COCl_2$	n/d	n/d	n/d	n/d	2=0	n/d	n/d	n/d	n/d	n/d	n/d	n/d	n/d
PH_3	n/d	1=0.56	n/d	n/d	2=0	n/d	n/d	n/d	n/d	n/d	n/d	n/d	n/d
SiH_4	n/d	n/a	n/d	n/d	2=0	n/d	n/d	n/d	n/d	n/d	n/d	n/d	n/d
SO_2	n/d	n/d	n/d	n/d	n/a	n/d	n/d	n/d	n/d	n/d	n/d	n/d	n/d

$C_4H_6O_2$	n/d	n/d	n/d	n/d	n/d	n/d	200=45	n/d	n/d	n/a	200=200	n/d	200=55
C_2H_3Cl	n/d	n/d	n/d	n/d	n/d	n/d	200=45	n/d	n/d	200=200	n/a	n/d	200=55

n/a – not applicable
n/d – no data

9.3 Spare Parts, Sensor Accessories, Calibration Equipment

Part Number	Spare Parts
927-245500-000	DM-700 Intelligent Transmitter Module (ITM for Toxic Gas Sensors)
927-345500-025	DM-700 Intelligent Transmitter Module (ITM for O_2 Sensors)
600-003215-000	Model DM-700 Splash Guard Adapter
377-XXXXXX-XXX	Replacement Plug-in toxic gas sensor (Refer to Table 2)
500-003087-100	Transient Protection PCA
Sensor Accessories	
897-850800-000	NEMA 7 Aluminum Enclosure less cover – 3 port
897-850400-000	NEMA 7 Aluminum Enclosure Cover (Blank)
897-850801-316	NEMA 7 316SS Enclosure less cover – 3 port
897-850401-316	NEMA 7 316SS Enclosure Cover (Blank)
613-120000-700	Sensor Splashguard with integral Cal Port
613-2R0000-000	Remote Calibration Adapter
943-002273-000	Harsh Environment Sensor guard
327-000000-000	Programming Magnet
960-202200-000	Condensation prevention packet (for J-Box replace annually)
Calibration Accessories	
943-000006-132	Threaded Calibration Adapter
943-050000-132	Span Gas Kit: Includes calibration adapter, span gas humidifier, 500cc/min fixed flow regulator, and carrying case. (Not including gas).
943-050000-HRG	Highly Reactive Gas Span Gas Kit (Used for NH_3, Cl_2, HCl, HBr, etc.)
See Detcon	Span Gasses
943-05AM00-000	500 cc/min Fixed Flow Regulator for span gas bottle
Recommend Spare Parts for 2 Years	
927-242400-000	DM-700 Intelligent Transmitter Module (ITM for Toxic Gas Sensors)
927-345500-025	DM-700 Intelligent Transmitter Module (ITM for O_2 Sensors)
600-003215-000	Splash Guard Adapter
377-XXXXXX-XXX	Replacement Plug-in toxic gas sensor (Refer to Table 2)
500-003087-100	Transient Protection PCA
960-202200-000	Condensation prevention packet (for J-Box. Replace annually)

9.4 Model DM-700 Engineering Drawings

1) DM-700 Series Breakaway and Wiring

2) DM-700 Series Wiring, Dimensional, and Wiring

Shipping Address: 3200 A-1 Research Forest Dr., The Woodlands Texas 77381
Mailing Address: P.O. Box 8067, The Woodlands Texas 77387-8067
Phone: 888.367.4286, 281.367.4100 • Fax: 281.292.2860 • www.detcon.com • sales@detcon.com

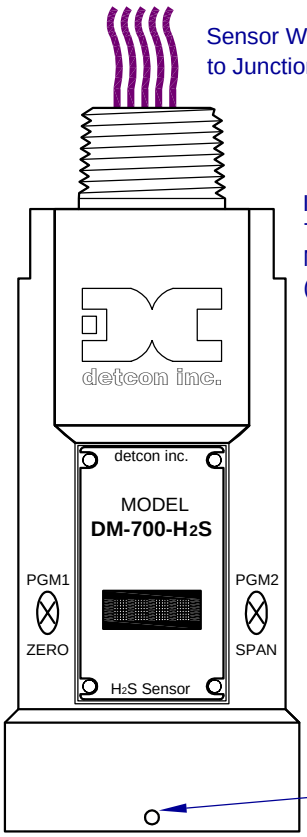

Sensor Wiring to Junction Box

Intelligent Transmitter Module (ITM)

Housing Bottom Locking Set-Screw

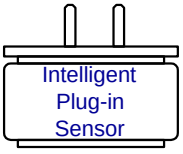

Remove Splash Guard Adapter from ITM to access Plug-in Sensor

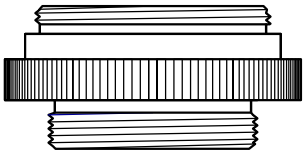

Splash Guard Adapter P/N 600-003215-000

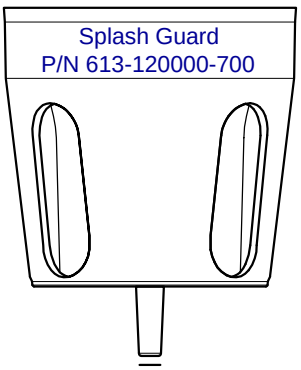

Transient Protection Module (TPM) P/N 500-003087-100

Customer Supplied Wiring (In)

Power from and 4-20mA out to Control Device

Modbus RS-485 to Host Control Device

Explosion Proof Junction Box

Customer Supplied Wiring (Out to next Device)

Power to next Device

Modbus RS-485 to next Device

Install a 100-250 Ohm resistor if the 4-20mA output is not used

Ground Points

Earth-Ground connection is made via 6-32 mounting holes.

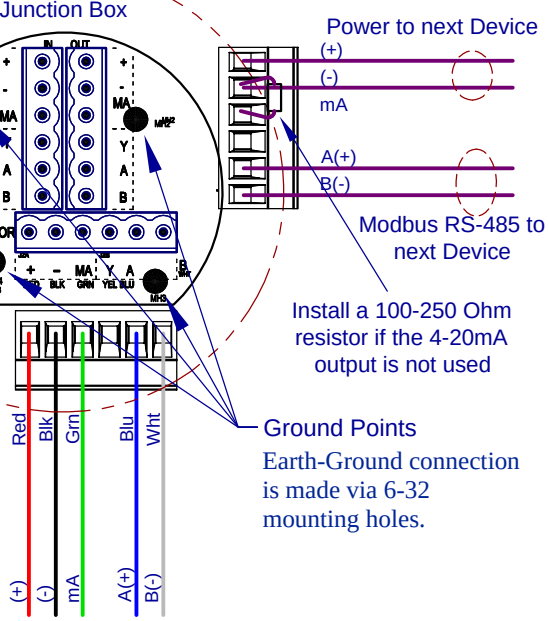

Wiring to Sensor Assembly

6-32 threaded Ground point

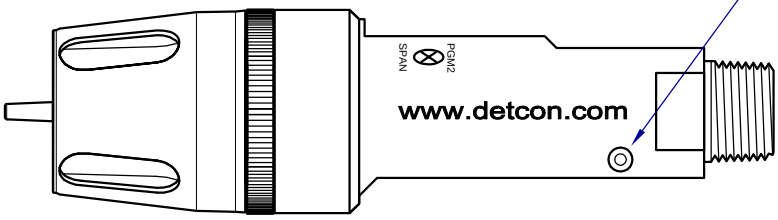

NOTES:

P.O. NO.	NA
REQ. NO.	NA
PROJECT NO.	NA
CLIENT'S SERIAL NO.	NA
PLANT:	NA

The information and technical data disclosed by this document may be used and disseminated only for the purposes and to the extent specifically authorized by Detcon Incorporated in writing. Such information and technical data are proprietary to Detcon Incorporated and may not be used or disseminated except as provided in the foregoing sentence.

REVISION HISTORY

Rev	DATE	DESCRIPTION	DRN	CHKD	APPD	DWG NO.	SUBJECT
4	01/14/08	Removed yellow wire	RH	SF	BM	3207	Updates
3	04/01/07	TPM Changed	RH	EM	BM	3207	Updates
2	11/28/06	Correct pinout on TPM	RH	EM	BM	3207	Updates
1	04/28/06	Update to current build	RH	EM	BM	3207	Updates

REF. DWGS

DETCON INC.
3200 Research Forest Dr. A-1 * The Woodlands Texas 77381 * www.detcon.com

CLIENT:

PROJECT: DM-700 Series Breakaway and Wiring

DRAWN BY: R Hutsko | SCALE: NTS | SALES ORDER NO. | DRAWING NO. 3207-1

FIRST ISSUE: 03/30/06 | DETCON PRPOSAL # | SIZE A | REV 4

This page left intentionally blank

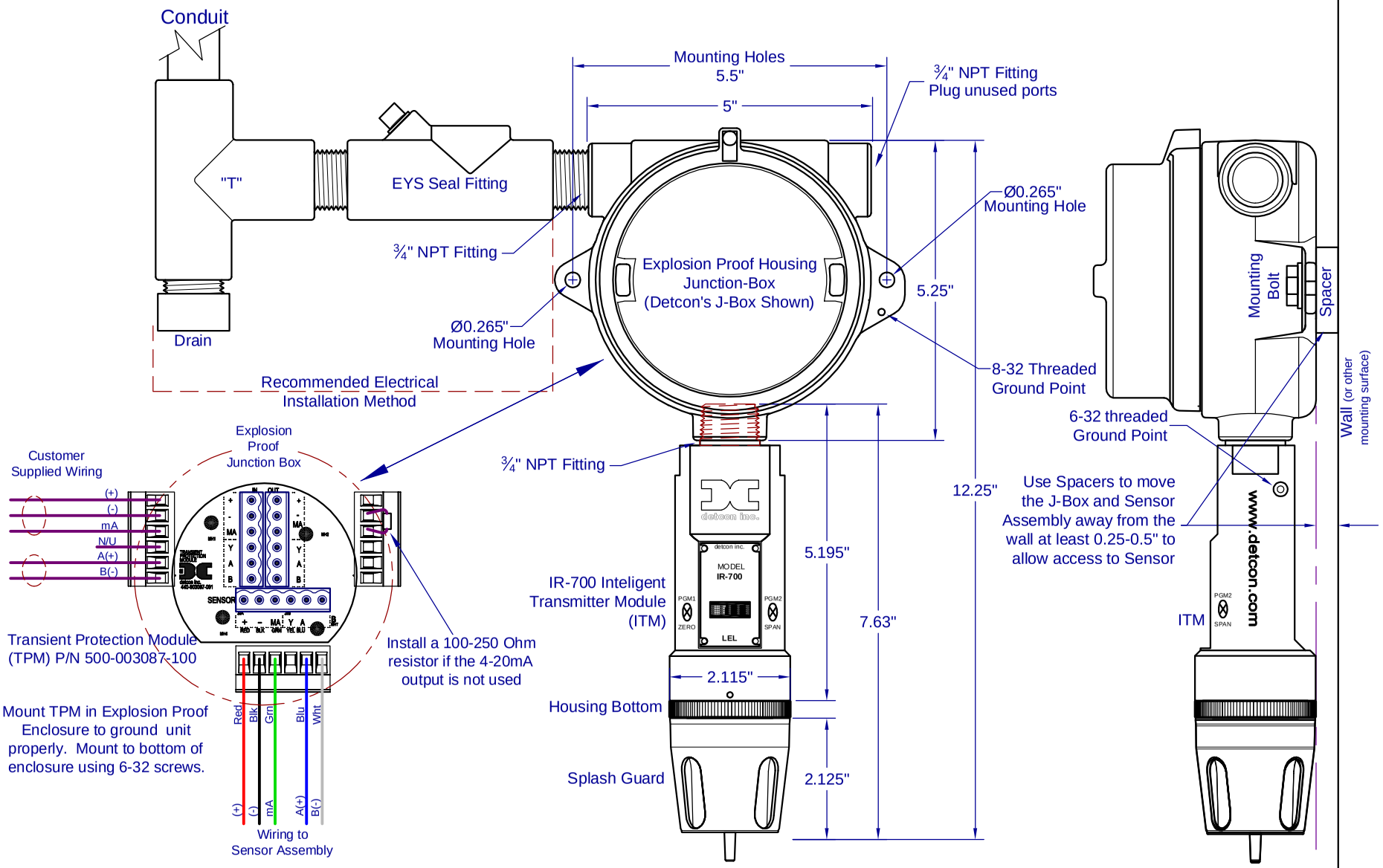

NOTES:

If the Sensor is not mechanically grounded to the Junction Box, and external ground strap should be used to insure proper grounding.

P.O. NO.	NA
REQ. NO.	NA
PROJECT NO.	NA
CLIENT'S SERIAL NO.	NA
PLANT:	NA

The information and technical data disclosed by this document may be used and disseminated only for the purposes and to the extent specifically authorized by Detcon Incorporated in writing. Such information and technical data are proprietary to Detcon Incorporated and may not be used or disseminated except as provided in the foregoing sentence.

Rev	DATE	DESCRIPTION	DRN	CHKD	APPD	DWG NO.	SUBJECT
4	01/14/08	Removed yellow wire	RH	SF	BM	3207	Updates
3	04/01/07	TPM Changed	RH	EM	BM	3207	Updates
2	11/28/06	Correct pinout on TPM	RH	EM	BM	3207	Updates
1	04/28/06	Update to current build	RH	EM	BM	3207	Updates

REVISION HISTORY — REF. DWGS

DETCON INC.
3200 Research Forest Dr. A-1 * The Woodlands Texas 77381 * www.detcon.com

CLIENT:

PROJECT:

DM-700 Series
Wiring, Dimensional,
and Mounting

DRAWN BY:	SCALE	SALES ORDER NO.	DRAWING NO.
R Hutsko	NTS		3207-2

FIRST ISSUE:	DETCON PRPOSAL #	SIZE	REV
03/30/06		A	4

JOB NO. NA | SIZE A | DRAWING NO. 3207-2 | REV 4