Beck.

Custom-made pressure monitoring.



Custom-made pressure monitoring

Diaphragm pressure switches and pressure transmitters from Beck are used in many different application areas for monitoring overpressure, vacuum or differential pressure.
Their modular design allows custom-made and cost-effective solutions. If necessary, individual product adaptation is also possible.

The **pressure switches** operate with a snap-acting switching mechanism which is controlled by a diaphragm and which is adjusted with helical springs. If the set value is exceeded, a contact is activated, deactivated or switched over.
The pressure switches are either permanently set at the factory or can be adjusted by the user himself for a wide range of switching pressures.

The **pressure transmitters** operate with a piezo-resistive pressure sensor as the active element for continuous pressure monitoring.
All pressure transmitters optionally have voltage or current interfaces. Certain designs can also be fitted with switching outputs. The manometers are also equipped with a digital display.

Beck offers a comprehensive **accessories range** of fastening and protective elements for the entire product range.

Data sheets with more detailed technical information are available for the individual product groups:

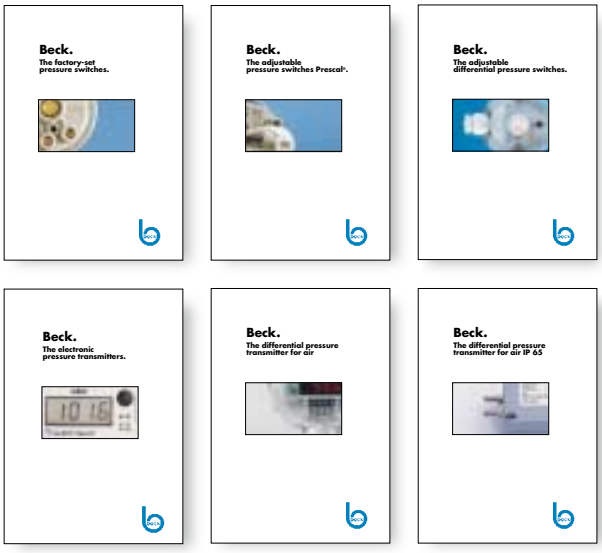

Compact overpressure and vacuum switches



The main area of use for the compact pressure switches series 901 is in monitoring filling levels and filters, as well as in monitoring overpressure, vacuum or differential pressure in closed systems.
These pressure switches are suitable for both liquid and gaseous media including aggressive media.

Tube connectors or threaded connectors made of plastic or metal are available as the pressure connections.
A selection of different diaphragm and contact materials permits optimum adaptation to the customer's relevant application.

901 pressure switches with permanent factory setting

The switching pressure can be defined at a value of between 5 mbar and 12 bar in the overpressure range and between -5 mbar and -900 mbar in the vacuum range.

901 Prescal® pressure switches with scaled adjustment knob

Various versions with overlapping adjustment ranges are available. These cover the overpressure range of 5 mbar to 12 bar, as well as the vacuum range of -5 mbar to -700 mbar.

Adjustable differential pressure switches



The adjustable differential pressure switches of the series 930.8 x Climair® and 911.81 are primarily used in ventilation and air-conditioning systems for monitoring the air flow in air ducts, as well as in filters, flaps and fans. They are suitable for air and also other non-inflammable and non-aggressive gases.

Various connection sets for ventilation ducts are available as accessories.

Differential pressure switch 930.8x Climair® with guide value scale

The switching pressure can be adjusted without a manometer at the adjustment knob with the guide value scale. Various versions are available for this with overlapping adjustment ranges of between 0.2 mbar and 40 mbar.

The pressure switch is equipped as standard with a transparent cover, protection class IP54.

Differential pressure switch 911.81 without guide value scale

The switching pressure can be set at the central adjustment screw with a screwdriver. Various versions are available with overlapping adjustment ranges of between 0.4 mbar and 5 mbar.

Electronic pressure transmitters



The electronic pressure transmitters with analog current or voltage output signal are used mainly for pressure measurement in industrial processes as well as for monitoring air flows at filters and blowers. They measure overpressure, vacuum or differential pressures of gaseous, non-aggressive media from -1 bar to 12 bar, whereby the lowest pressure ranges are at 0...+-100 Pa.

Standard pressure transmitter 980

The standard pressure transmitter in the IP 50 plastic housing is available with plug or cable connection. The pressure connection is designed as a pipe connection.

Digital pressure gauge SensWitch Display P2 990

This universal series with LCD display and optional relay output is designed for installation in control panels and switchboards. There is IP 20 protection on the front.

Differential pressure transmitter 986

This series has an IP 65 metal housing and is designed for industrial applications.

Differential pressure transmitter 984M

This differential pressure transmitter in the IP 54 plastic housing, optionally with LED display, can be fastened directly using molded mounting eyes. The electrical connection is by a cable conduit to screw terminals.
The pressure connection to the process is made by means of hose connections.

Pressure switch 901

with factory-set pressure setting

Application

Factory-set pressure switch monitoring overpressure, vacuum or differential pressure of liquid and gaseous – also aggressive – media.

Pressure setting and switching differential are factory-set by the manufacturer.

Temperature range

Ambient temperature from –20° C to 85° C.
Temperature of media up to 85° C or 130° C depending on material of pressure connection and diaphragm.

Diaphragm material

Depending on media NBR, Silicone, FKM (Viton®), EPDM.
For 901.30 Silicone, others upon request.

Electrical rating

Values indicated for resistive load

AgNi-contacts:	6 (1.5) A/250 VAC
	2 A/24 VDC
Gold-plated contacts:	100 mA/24 VAC
	30 mA/24 VDC

AgNi-contacts up to 10 A/250 VAC can be supplied upon request.

Electrical connection

AMP connection 6.3 mm x 0.8 mm DIN 46244.

Arrangement of contacts

for 901.1x, 901.30, 901.41, 901.51

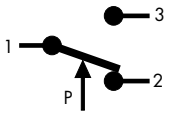

only for 901.2x

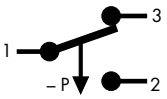

CE Conformity

each depending on technical specification: Low Voltage Directive 2006/95/EC; RoHS Directive 2002/95/EC; ATEX-Directive 94/9/EC; Product types tested by TÜV Südwest.

Life

Minimum 10^6 cycles.

Damping

Restrictors alternatively with 0.3/0.5/0.8 mm diameter.

Accessories

Various mounting brackets and protection caps with IP 44, IP 54 and IP 65.

Mounting position

Mounting in any position, to be specified for settings below 100 mbar.

Pressure connection

Type	Tube connection			Threaded connection			
	5.0 mm	6.5 mm	10.0 mm	M10 x1	G1/8	G1/4	G1/2
901.1x	PA	PA, PPS	PA, PPS	PA, PVDF CuZn40, V_2A	PA, PVDF CuZn40, V_2A	PVDF CuZn40, V_2A	CuZn40
901.2x	PA	PA, PPS	PA, PPS	PA, PVDF CuZn40, V_2A	PA, PVDF CuZn40, V_2A	CuZn40, V_2A	CuZn40
901.30		PA					
901.41		PA, PPS	PA, PPS	PA,PVDF CuZn40, V_2A	PA, PVDF CuZn40, V_2A	CuZn40, V_2A	CuZn40
901.51				CuZn40	CuZn40, V_2A	CuZn40, V_2A	

PA = polyamide, PVDF = polyvinyldifluoride, PPS = polyphenylensulfide, CuZn40 = brass, V_2A = stainless steel

For temperature above 85° C metal or PPS pressure connection is required. Upon request pressure connections of other sizes, other plastics or brass nickel-plated are available.

Viton® is a registered trademark of DuPont Dow Elastomers.



Overpressure range

Type	Factory-set trip pressure		Standard switching differential		Tolerance band in % of trip pressure	Maximum positive working pressure	Maximum negative working pressure
	between	and	lower end of range	upper end of range		standard/ extended	standard/ extended
901.1x	5 mbar	200 mbar	2.5 mbar	50 mbar	±10 %	0.5/4 bar	–/–1 bar
	200 mbar	1.000 mbar	50 mbar	150 mbar	±10 %	1/4 bar	–/–1 bar
901.41	500 mbar	3.000 mbar	200 mbar	600 mbar	±10 %	10 bar	–1 bar
901.51	1.0 bar	12 bar	0.2 bar	1.5 bar	±10 %	25 bar	–1 bar

Vacuum range

Type	Factory-set trip pressure		Standard switching differential		Tolerance band in % of trip pressure	Maximum positive working pressure	Maximum negative working pressure
	between	and	lower end of range	upper end of range		standard/ extended	standard/ extended
901.2x	– 5 mbar	– 200 mbar	2.5 mbar	50 mbar	±10 %	0.5/4 bar	–1 bar
	– 200 mbar	– 900 mbar	50 mbar	150 mbar	±10 %	1/4 bar	–1 bar

Differential pressure range

Type	Factory-set trip pressure		Standard switching differential		Tolerance band in % of trip pressure	Maximum positive working pressure	Maximum negative working pressure
	between	and	lower end of range	upper end of range		standard/ extended	standard/ extended
901.30	5 mbar	50 mbar	2.5 mbar	25 mbar	±10 %	100 mbar	–100 mbar

Pressure switch 901

with factory-set pressure setting

901.10/20

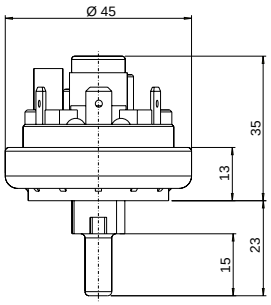

901.30

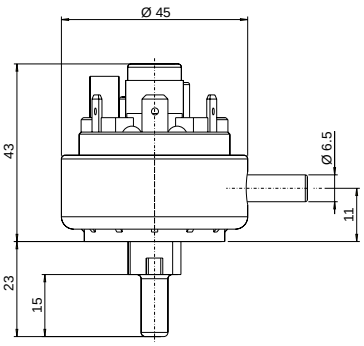

Protection caps
6329 IP 44

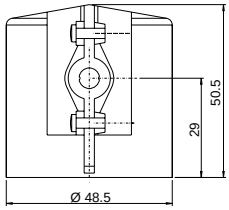

6345 IP 54

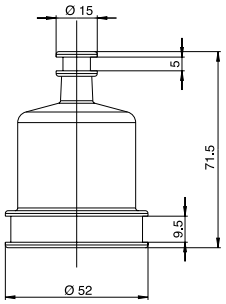

901.11/21/41

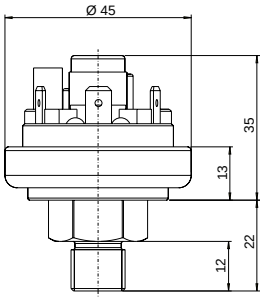

901.51

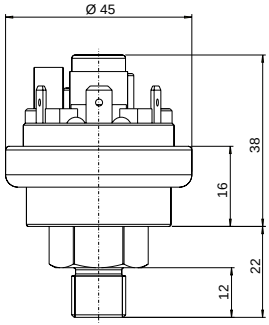

6371 IP 54 / 6372 IP 65

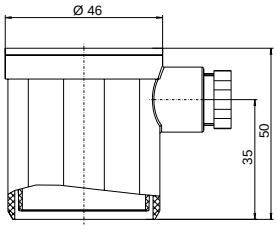

Mounting brackets
6403 **6404** **6405**

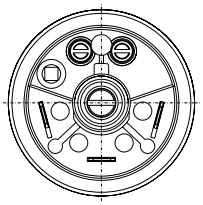

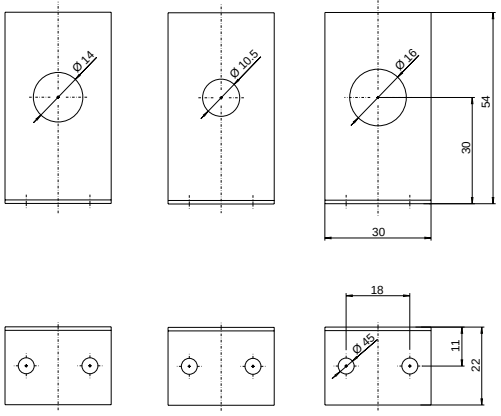

6374 IP 54 / 6375 IP 65

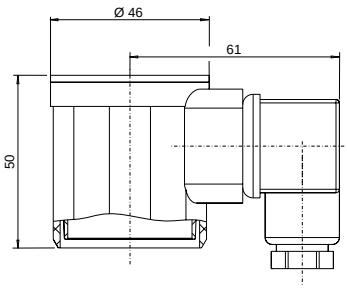

QUALITY MANAGEMENT
Certificate
Voluntary participation in regular monitoring according to ISO 9001:2000

901_data_english 1/09 Technical data subject to change without prior notice.

Pressure switch 901 Prescal®

with adjustable setting

Application

Adjustable pressure switch monitoring overpressure, vacuum or differential pressure of liquid and gaseous – also aggressive – media.

The pressure switch uses a scaled adjustment knob to enable the adjustment of trip and reset pressure without the use of a screwdriver.

Temperature range

Ambient temperature from –20° C to 85° C.
Temperature of media from 85° C or 130° C depending on material of pressure connection and diaphragm.

Diaphragm material

Depending on media NBR, Silicone, FKM (Viton®), EPDM.
For 901.8x Silicone, others upon request.

Electrical rating

Values indicated for resistive load

AgNi-contacts:	6 (1.5) A/250 VAC
	2 A/24 VDC
Gold-plated contacts:	100 mA/24 VAC
	30 mA/24 VDC

AgNi-contacts up to 10 A/250 VAC can be supplied upon request.

Electrical connection

AMP connection 6.3 mm x 0.8 mm DIN 46244.

Arrangement of contacts

for 901.6x, 901.8x, 901.9x

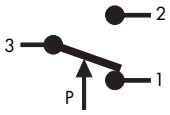

only for 901.7x

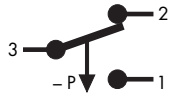

CE Conformity

each depending on technical specification: Low Voltage Directive 2006/95/EC; RoHS Directive 2002/95/EC; ATEX-Directive 94/9/EC; Gas Appliance Directive 90/396/EC (only for Type 901.61 to 901.65 with brass pressure connection).

Life

Minimum 10^6 cycles.

Damping

Restrictors alternatively with 0.3/0.5/0.8 mm diameter.

Accessories

Various mounting brackets and protection caps with IP 44, IP 54 and IP 65.

Mounting position

Mounting in any position, to be specified for settings below 100 mbar.

Pressure connection

Type	Tube connection			Threaded connection			
	5.0 mm	6.5 mm	10.0 mm	M 10 x1	G 1/8	G 1/4	G 1/2
901.61– 65	PA	PA, PPS	PA, PPS	PA, PVDF CuZn40, V2A	PA, PVDF CuZn40, V2A	CuZn40, V2A	CuZn40
901.66 – 68				CuZn40, V2A	CuZn40, V2A	CuZn40, V2A	CuZn40
901.71– 76	PA	PA,PPS	PA,PPS	PA,PVDF CuZn40, V2A	PA, PVDF CuZn40, V2A	CuZn40, V2A	
901.77– 78				CuZn40, V2A	CuZn40, V2A	CuZn40, V2A	CuZn40
901.8x		PA					
901.91–93				CuZn40	CuZn40, V2A	CuZn40, V2A	

PA = polyamide, PVDF = polyvinyldifluoride, PPS = polyphenylensulfide, CuZn40 = brass, V2A = stainless steel

For temperature above 85° C metal or PPS pressure connection is required. Upon request pressure connections of other sizes, other plastics or brass nickel-plated are available.

Viton® is a registered trademark of DuPont Dow Elastomers.
Prescal® is a registered trademark of Beck GmbH Druckkontrolltechnik.



Overpressure range

Type	Adjustment range for trip pressure from	to	Tolerance band in % of	Switching differential	Maximum positive working pressure standard/extended	Maximum negative working pressure standard/extended
901.61	5	20 mbar	± 10 %	3 mbar	0.5/4 bar	–/–1 bar
901.62	10	50 mbar	± 10 %	5 mbar	0.5/4 bar	–/–1 bar
901.63	25	100 mbar	± 10 %	10 mbar	0.5/4 bar	–/–1 bar
901.64	50	250 mbar	± 10 %	20 mbar	1/4 bar	–/–1 bar
901.65	100	500 mbar	± 10 %	50 mbar	1/4 bar	–/–1 bar
901.66	250	1.000 mbar	± 10 %	150 mbar	10 bar	–1 bar
901.67	500	1.500 mbar	± 10 %	250 mbar	10 bar	–1 bar
901.68	1.000	3.000 mbar	± 10 %	500 mbar	10 bar	–1 bar
901.91	1.0	6.0 bar	± 10 %	0.5 – 2.0 bar	25 bar	–1 bar
901.92	4.0	9.0 bar	± 10 %	0.5 – 2.0 bar	25 bar	–1 bar
901.93	7.0	12.0 bar	± 10 %	0.5 – 2.0 bar	25 bar	–1 bar

Vacuum range

901.71	– 5	– 20 mbar	± 10 %	3 mbar	0.5/4 bar	–1 bar
901.72	– 10	– 50 mbar	± 10 %	5 mbar	0.5/4 bar	–1 bar
901.73	– 25	– 100 mbar	± 10 %	10 mbar	0.5/4 bar	–1 bar
901.74	– 50	– 125 mbar	± 10 %	20 mbar	0.5/4 bar	–1 bar
901.75	– 75	– 200 mbar	± 10 %	25 mbar	1/4 bar	–1 bar
901.76	– 100	– 300 mbar	± 10 %	30 mbar	1/4 bar	–1 bar
901.77	– 200	– 500 mbar	± 10 %	75 mbar	1/4 bar	–1 bar
901.78	– 300	– 700 mbar	± 10 %	75 mbar	1/4 bar	–1 bar

Differential pressure range

901.81	5	20 mbar	± 10 %	3 mbar	100 mbar	–100 mbar
901.82	10	50 mbar	± 10 %	5 mbar	100 mbar	–100 mbar

Pressure switch 901 Prescal®

with adjustable setting

901.6x/7x

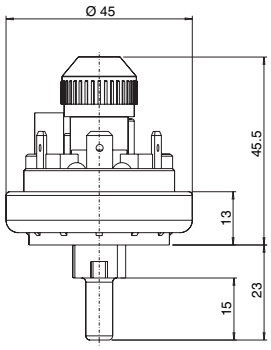

901.8x

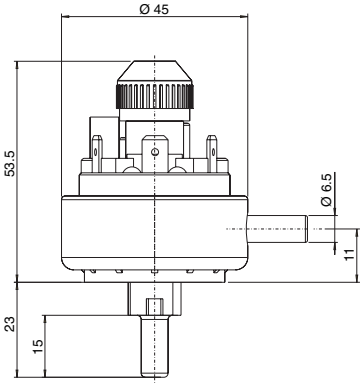

Protection caps
6329 IP 44

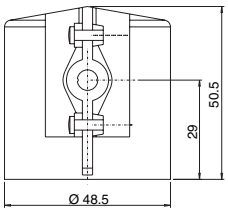

6365 IP 54

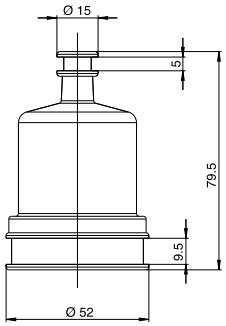

901.6x/7x

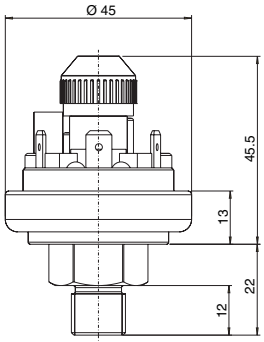

901.9x

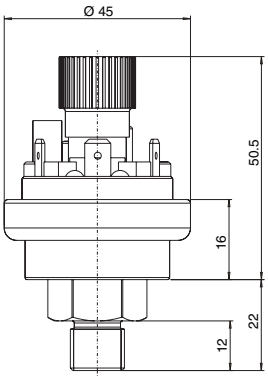

6371 IP 54 / 6372 IP 65

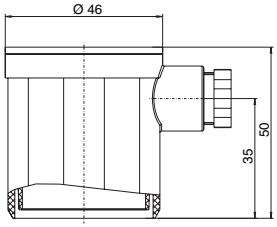

Mounting brackets
6403 **6404** **6405**

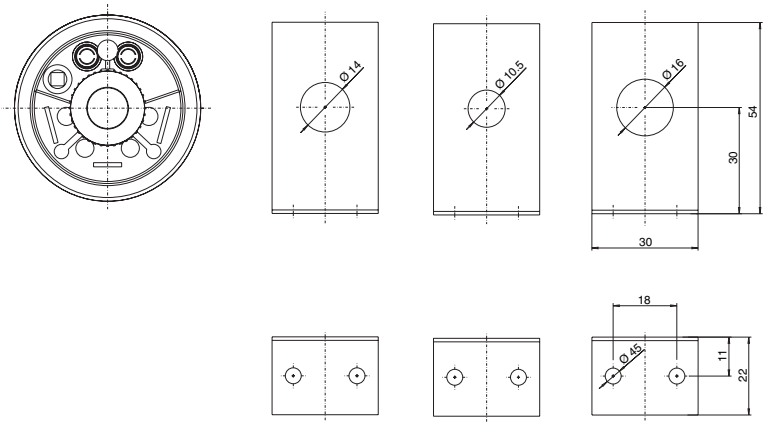

6374 IP 54 / 6375 IP 65

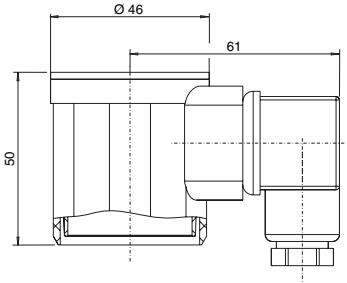

QUALITY MANAGEMENT Certificate
Voluntary participation in regular monitoring according to ISO 9001:2000

Beck.

The adjustable differential pressure switches.



Differential pressure switch 930.8x Climair®

with adjustable switching pressure



Applications

Adjustable differential pressure switch for monitoring overpressure, vacuum and differential pressure of air or other non-combustible, non-aggressive gases. Possible fields of application include:

- Monitoring air filters and ventilators
- Monitoring industrial cooling-air circuits
- Overheating protection for fan heaters
- Monitoring flows in ventilation ducts
- Controlling air and fire-protection flaps
- Frost protection for heat exchangers

Versions

With this pressure switch the switching pressure can be adjusted without a pressure gauge using a scaled adjustment knob. The switching differential can also be adjusted with a screwdriver.

Type	Adjustment range for upper switching pressure from to	Switching differential set to	Tolerance for upper and lower switching pressure
930.80	20 300 Pa	10 Pa	± 15%
930.84	30 400 Pa	15 Pa	± 15%
930.83	50 500 Pa	20 Pa	± 15%
930.85	200 1000 Pa	100 Pa	± 15%
930.86	500 2500 Pa	150 Pa	± 15%
930.87	1000 5000 Pa	250 Pa	± 15%

Switching pressure specifications apply to vertical installation which is also the recommended position with pressure-pipe connections pointing downwards. If the switches are installed horizontally with AMP connection terminals uppermost, the switching values are approx. 20 Pa higher.

Maximum operating pressure

10 kPa for all pressure ranges.

Medium

Air, non-combustible and non-aggressive gases.

Temperature range

Medium and ambient temperature from –20°C to +85°C.
Storage temperature from –40°C to +85°C.

Diaphragm material

Silicone, tempered at 200°C, free of gas emissions.
Other materials available on request.

Pressure connections

2 plastic pipe connection pieces (P1 and P2), external diameter 6.0 mm:
P1 for connection to higher pressure (marked +)
P2 for connection to lower pressure (marked –)

Housing materials

Switch body made of PA 6.6.
Cover made of PS.

Weight

With cover 150 g
Without cover 110 g

Mechanical working life

Over 10^6 switching operations.

Electrical rating

Standard version	max. 1.0 A (0.4 A) / 250 VAC
Low-voltage version	max. 0.1 A / 24 VDC

Electrical connections

AMP flat plug 6.3x0.8 mm in accordance with DIN 46244 or push-on screw terminals.
Cable conduit with cable strain relief.

Arrangement of contacts

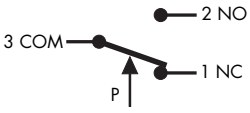

1 Break contact
2 Operating contact
3 Power supply line

Protection category

IP 54 with cover
IP 00 without cover

CE Conformity

each depending on technical specification: Low Voltage Directive 2006/95/EC; RoHS Directive 2002/95/EC; Gas Appliance Directive 90/396/EC; ATEX- Directive 94/9/EC; ANSI UL508; CSA.

Accessories

See order matrix.

Order matrix

Pressure ranges	20 to 300 Pascal (0.2 to 3.0 mbar)	**930.8**	**0**						
	30 to 400 Pascal (0.3 to 4.0 mbar)		**4**						
	50 to 500 Pascal (0.5 to 5.0 mbar)		**3**						
	200 to 1000 Pascal (2.0 to 10.0 mbar)		**5**						
	500 to 2500 Pascal (5.0 to 25.0 mbar)		**6**						
	1000 to 5000 Pascal (10 to 50 mbar)		**7**						
Switching contacts	gold-plated for low voltages, screw terminals enclosed			1					
	up to maximum 1.0 A (0.4) / 250 VAC, screw terminals enclosed			2					
	up to maximum 1.0 A (0.4) / 250 VAC with 6.3x0.8 mm flat plugs			3					
	gold-plated for low voltages with 6.3x0.8 mm flat plugs			4					
Fitting method	mounted directly without bracket				2				
Adjustment knob	scale in mbar					1			
	scale in Pascal					2			
	scale in Pascal and inWC					3			
IP protection category	IP 54 with cable conduit M16						5		
	IP 54 with cable conduit M20x1.5						2		
	IP 54 with cable conduit NPT1/2"						3		
	IP 00 without cover						4		
Packaging	bulk packed, 45 pcs. per carton							1	
	bulk packed, folding boxes included							2	
	individually boxed							3	
Accessories	without accessories								1
	with S-shaped metal mounting bracket 6402								2
	with L-shaped metal mounting bracket 6401								3
	with Climaset® 6555								4
	with Climaset® 6550								5
	with S-shaped metal mounting bracket 6402 and Climaset® 6555								6
	with S-shaped metal mounting bracket 6402 and Climaset® 6550								7
	with L-shaped metal mounting bracket 6401 and Climaset® 6555								8
	with L-shaped metal mounting bracket 6401 and Climaset® 6550								9
	with S-shaped snap-on plastic bracket 6482								A
	with L-shaped snap-on plastic bracket 6481								B
	with S-shaped snap-on plastic bracket 6482 and Climaset® 6555								C
	with S-shaped snap-on plastic bracket 6482 and Climaset® 6550								D
	with L-shaped snap-on plastic bracket 6481 and Climaset® 6555								E
	with L-shaped snap-on plastic bracket 6481 and Climaset® 6550								F

Accessories

Metal mounting bracket S-shaped	Article No. 6402
Metal mounting bracket L-shaped	Article No. 6401
Snap-on plastic bracket S-shaped	Article No. 6482
Snap-on plastic bracket L-shaped	Article No. 6481
Climaset® consisting of 2 m PVC hose and 2 plastic tubes	Article No. 6555
Climaset® consisting of 2 m Silicone hose and 2 plastic tubes	Article No. 6557
Climaset® consisting of 2 m PVC hose and 2 angled metal pipes	Article No. 6550
Climaset® consisting of 2 m Silicone hose and 2 angled metal pipes	Article No. 6556
Set consisting of three push-on screw terminals	Article No. 6415
Plastic tube for Climaset® 6555	Article No. 6551
Angled metal pipe for Climaset® 6550	Article No. 6552
Rubber grommet for Climaset® 6550	Article No. 6553
Roll with 100 m PVC hose	Article No. 6424
M16 cable conduit including sealing and counter screw	Article No. 6562
M20x1.5 cable conduit including sealing and counter screw	Article No. 6568
NPT1/2" cable conduit without counter parts	Article No. 6561
Cardbox for single packing (without accessories)	Article No. 6428
Cardbox for single packing (with accessories)	Article No. 6429

Differential pressure switches
930.8x Climair®
with adjustable switching pressure

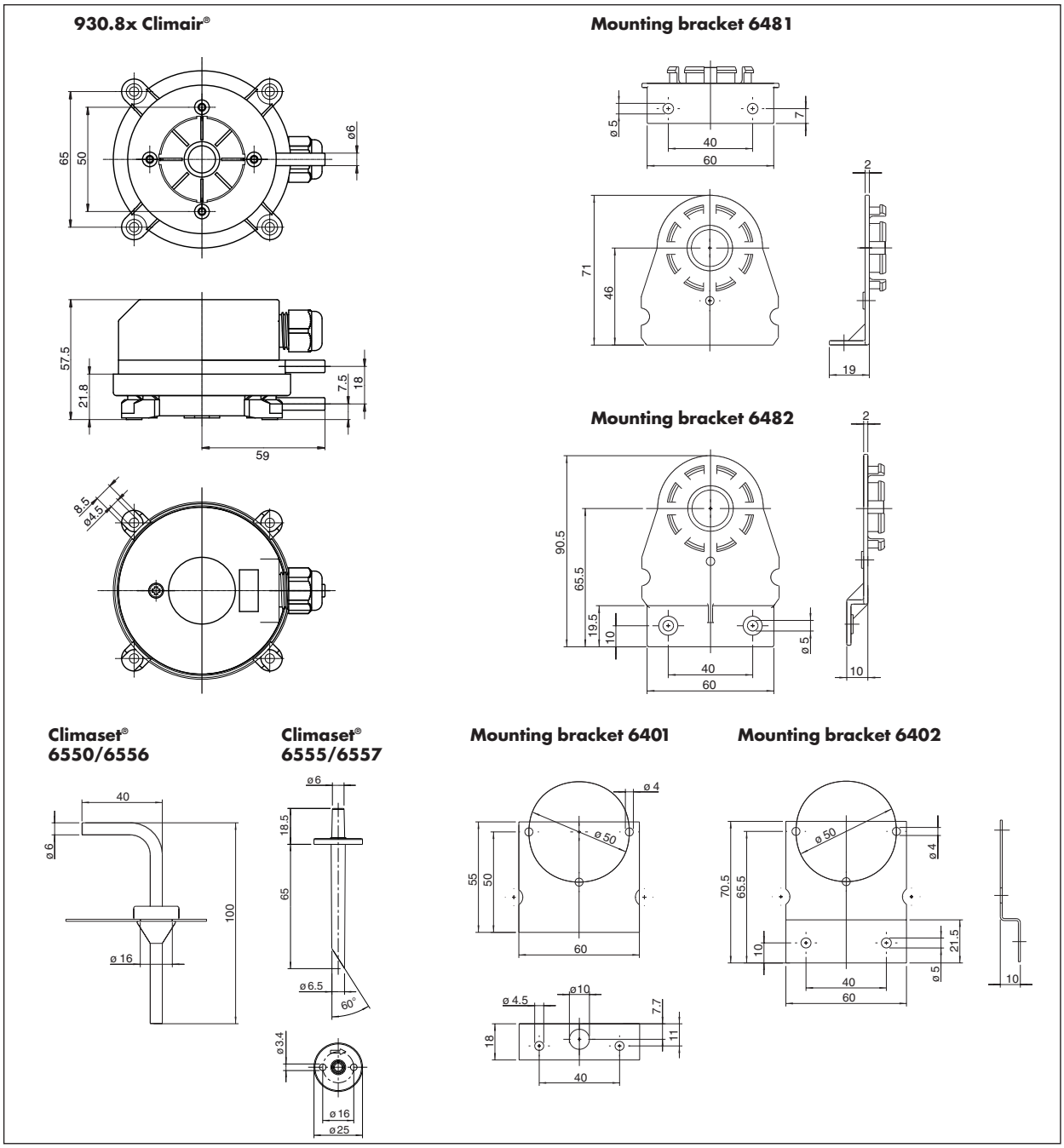

ISO 9001:2008 DEKRA certified
Quality Management
We are certified
Voluntary participation in regular monitoring according to ISO 9001:2008

930_data_english 7/11 Technical data subject to change without prior notice. Copyright © 2011 Beck GmbH

Differential pressure switch 911.81x



Applications

Adjustable differential pressure switch for monitoring overpressure, vacuum and differential pressure of air or other non-combustible, non-aggressive gases.
Possible fields of application include:

- Monitoring air filters and ventilators
- Overheating protection for fan heaters
- Monitoring flows in ventilation ducts
- Frost protection for heat exchangers

Versions

With this pressure switch without a scale the switching pressure can be adjusted very precisely with the central adjusting screw using a screwdriver and a pressure gauge. The switching differential can also be adjusted in the same way as for the Series 930.8x Climair®.

Type	Adjustment range for upper switching pressure from	to	Switching differential set to	Tolerance for upper and lower switching pressure
911.811	20	100 Pa	10 Pa	± 10%
911.812	40	200 Pa	20 Pa	± 10%
911.813	100	300 Pa	25 Pa	± 10%
911.814	200	500 Pa	50 Pa	± 10%

Switching pressure specifications apply to vertical installation. If the switches are installed horizontally, the switching values are approx. 20 Pa higher.

Maximum operating pressure

100 kPa for all pressure ranges.

Temperature range

Medium and ambient temperature from -20°C to +85°C.
Storage temperature from -40°C to +85°C.

Diaphragm material

Silicone. Other materials available on request.

Pressure connections

2 pipe connection pieces (P1 and P2), external diameter 6.0 mm:
P1 for connection to higher pressure (designated +)
P2 for connection to lower pressure (designated -)

Housing materials

Switching casing and connection P2 made of PA 6.6, fitting section and connection P1 made of POM.

Weight

911.81x with/without cover 94/ 82 g

Mechanical working life

Over 10^6 switching operations.

Electrical rating

Standard version max. 1.0 A (0.4 A) / 250 V AC
Low-voltage version max. 0.1 A / 24 V DC

Electrical connections

AMP flat plug 6.3 mm x 0.8 mm in accordance with DIN 46244 or push-on screw terminals.

Arrangement of contacts

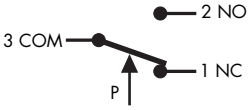

1 Break contact
2 Operating contact
3 Power supply line

Protection category

911.81x with/without cover IP 20/IP 00

CE Conformity

each depending on technical specification: Low Voltage Directive 2006/95/EC; RoHS Directive 2002/95/EC.

Order matrix

Pressure ranges	0.2 to 1.0 mbar (20 - 100 Pa)	**911.81**	**1**						
	0.4 to 2.0 mbar (40 - 200 Pa)		**2**						
	1.0 to 3.0 mbar (100 - 300 Pa)		**3**						
	2.0 to 5.0 mbar (200 - 500 Pa)		**4**						
Switching contacts	for low voltages			1					
	up to max. 1.0A (0.4) / 250 V AC			2					
Fitting method	mounted directly without bracket				2				
	with S-shaped mounting bracket				3				
	with L-shaped mounting bracket				4				
IP protection category	IP 20 with transparent cover						1		
	IP 00 without cover						2		
Packaging	bulk packed, 60 pcs. per carton							1	

Differential pressure switch 911.81x

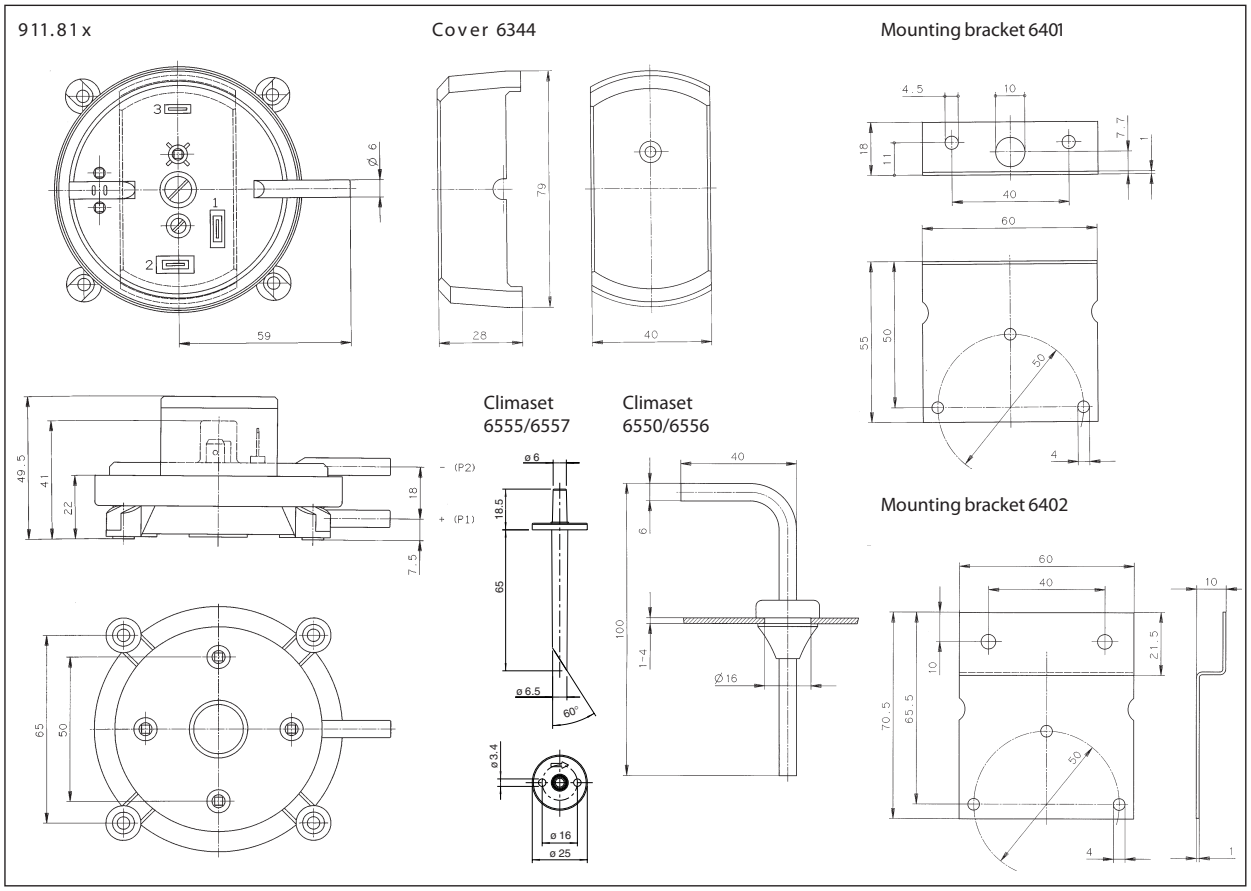

Accessories

L-shaped mounting bracket	Article No. 6401
S-shaped mounting bracket	Article No. 6402
Set consisting of three push-on screw terminals	Article No. 6415
IP 20 cover for 911.81	Article No. 6344
Climaset consisting of 2m PVC piping and two angled metal pipes	Article No. 6550
Climaset consisting of 2m silicone piping and two angled metal pipes	Article No. 6556
Climaset consisting of 2m PVC piping and two plastic nipples	Article No. 6555
Climaset consisting of 2m silicone piping and two plastic nipples	Article No. 6557
0.8 mm nozzle for damping pressure surges	Article No. 6338
0.5 mm nozzle for damping pressure surges	Article No. 6334

Technical data subject to change without prior notice.

Beck.

The differential pressure transmitter for air



Differential pressure transmitter 984M



General description

The differential pressure transmitters of the 984M series are used to measure differential pressure, overpressure and vacuum.

They provide 2 pressure ranges and 2 output signals, which are selectable using a jumper.

Applications

Monitoring of gaseous, non-aggressive media. Possible usage areas are:

- Building automation, air conditioning systems and clean room monitoring
- Valve and flap control
- Filter, ventilator and blower monitoring
- Control of air flows

Configurable pressure range

For optimum adaptation to the pressure application, the transmitter can be switched between two pressure ranges. The factory setting is the sensitive range 1, which is selected by fitting a jumper. Removing the jumper activates the non-sensitive range 2.

Configurable response time

The response time of the output signal can be configured using a jumper. If the jumper is in place the response time is slow (factory setting), which is useful for suppressing brief pressure peaks. If the application requires a fast response time the jumper must be removed.

Volume flow measurement (optional)

The shape of the output signal can be switched from linear to square root using a jumper in order to measure the volume flow via a differential pressure.

Output signal selection

The output signal of the 3-wire version is configurable. The factory setting is for a 0 ...10 Volt output signal, but this can be changed to 4 ... 20 mA by removing the jumper. The 2-wire version is only available with a 4 ... 20 mA output signal.

Easy offset calibration

The output signal can be calibrated to zero by pressing the M key (pressure transmitter must be depressurised).

Switching output (not available with 2-wire version)

As well as an analogue output signal, the differential pressure transmitter contains an adjustable transistor switching output with a maximum switching capacity of 35 VDC/100 mA.

Measuring method

Piezoresistive pressure transducer

Mounting position

Can be mounted in any position. The self-compensating piezoresistive pressure transducer eliminates any possible mounting error.

Technical data

Supply voltage	
• 3-wire version	24 VAC/VDC
• 2-wire version	24 VDC
Output signal	
• 3-wire version	0 ... 10 V and 4 ... 20 mA
• 2-wire version	4 ... 20 mA
Load for 4 ... 20 mA output	20 ... 500 Ω
Pressure medium	Air and non-aggressive gases
Linearity and hysteresis error	≤ ± 1 % of FS
Working temperature	0...50 °C
Storage temperature	-10 ... 70 °C
Typical long-term stability	≤ ± 0.5 % to ± 2.5 % of FS/year, depending on pressure range
Repetition accuracy	≤ ± 0.2 % of FS
Position dependence	≤ ± 0.02 % of FS/g
Humidity	0 ... 95 % rel, non-condensing
Response time, selectable	1s or 100 ms
Process connection	6 mm hose connection
Electrical connection	Screw terminal block for wires and strands up to 1.5 mm^2
Mounting	Screw mounting with serrated screws
Display, optional	Red LED display, 4 digits
Housing material	Housing with process connection P2 made from ABS, mounting part with process connection P1 made from POM
Housing dimensions	approx. Ø 85 x 58 mm
Weight	approx. 130 g
Protection class acc. to EN 60529	IP 54 with protection cap (delivery condition) or IP 00 without protection cap
Cable conduit for protection cap	M16 or M20x1.5 connection made of polyamide
Standards / Conformance	EN60770, EN61326 2002/95/EEC (RoHS)

Pressure ranges

Model	Range 1	Range 2	Overload capacity	Bursting pressure	Temperature error of FS
984M.323	0 ... 100 Pa	0 ... 250 Pa	20 kPa	40 kPa	≤ ± 5 % v. EW
984M.333	0 ... 250 Pa	0 ... 500 Pa	20 kPa	40 kPa	≤ ± 5 % v. EW
984M.343	0 ... 500 Pa	0 ... 1.000 Pa	20 kPa	40 kPa	≤ ± 2.5 % v. EW
984M.353	0 ... 1 kPa	0 ... 2.5 kPa	40 kPa	70 kPa	≤ ± 1 % v. EW
984M.373	0 ... 5 kPa	0 ... 10 kPa	60 kPa	120 kPa	≤ ± 1 % v. EW
984M.393	0 ... 25 kPa	0 ... 50 kPa	300 kPa	500 kPa	≤ ± 1 % v. EW
984M.3B3	0 ... 100 kPa	0 ... 250 kPa	1.2 MPa	2 MPa	≤ ± 1 % v. EW

Order matrix

IP protection class	IP 54 with cable conduit M16		**984M.** 5					
	IP 54 with cable conduit M20x1.5		3					
Configurable pressure ranges	**0 ... 100 Pa (1.0 mbar)**	0 ... 250 Pa (2.5 mbar)		2				
	0 ... 250 Pa (2.5 mbar)	0 ... 500 Pa (5.0 mbar)		3				
	0 ... 500 Pa (5.0 mbar)	0 ... 1.000 Pa (10 mbar)		4				
	0 ... 1 kPa (10 mbar)	0 ... 2,5 kPa (25 mbar)		5				
	0 ... 5 kPa (50 mbar)	0 ... 10 kPa (100 mbar)		7				
	0 ... 25 kPa (250 mbar)	0 ... 50 kPa (500 mbar)		9				
	0 ... 100 kPa (1,000 mbar)	0 ... 250 kPa (2,500 mbar)		B				
Pressure unit	Pascal				3			
Output signal and supply voltage	**0 ... 10 Volt** or 4 ... 20 mA, 3-wire, 24 VAC/VDC, with switching output					1		
	4 ... 20 mA, 2-wire, 24 VDC, without switching output					2		
	4 ... 20 mA or 0 ... 10 Volt, 3-wire, 24 VAC/VDC, with switching output					3		
	0 ... 10 Volt or 4 ... 20 mA, 3-wire, 24 VAC/VDC, without switching output					7		
	4 ... 20 mA or 0 ...10 Volt, 3-wire, 24 VAC/VDC, without switching output					D		
Display	no display						0	
	with LED-display, 3.5 digits (not for 4 ... 20 mA output, 2-wire)						1	
Electrical connection via screw terminal block								4

Factory settings printed in bold type.

Accessories

Metal mounting bracket S-shaped	Article No. 6402
Metal mounting bracket L-shaped	Article No. 6401
Snap-on plastic bracket S-shaped	Article No. 6482
Snap-on plastic bracket L-shaped	Article No. 6481
Climaset® consisting of 2m PVC hose and 2 plastic pipes	Article No. 6555
Climaset® consisting of 2m Silicone hose and 2 plastic pipes	Article No. 6557
Climaset® consisting of 2m PVC hose and 2 angled metal pipes	Article No. 6550
Climaset® consisting of 2m Silicone hose and 2 angled metal pipes	Article No. 6556
Duct connecting pipe for Climaset® 6555	Article No. 6551
Angled metal pipe for Climaset® 6550	Article No. 6552
Rubber grommet for Climaset® 6550	Article No. 6553
Roll with 100 m PVC hose	Article No. 6424
M16 cable conduit including seal and counter screw	Article No. 6562
M20x1.5 cable conduit including seal and counter screw	Article No. 6568
NPT1/2" cable conduit without insert	Article No. 6561
Folding box for individual packing (without accessories)	Article No. 6428
Folding box for individual packing (with accessories)	Article No. 6429

Differential pressure transmitter 984M

984M

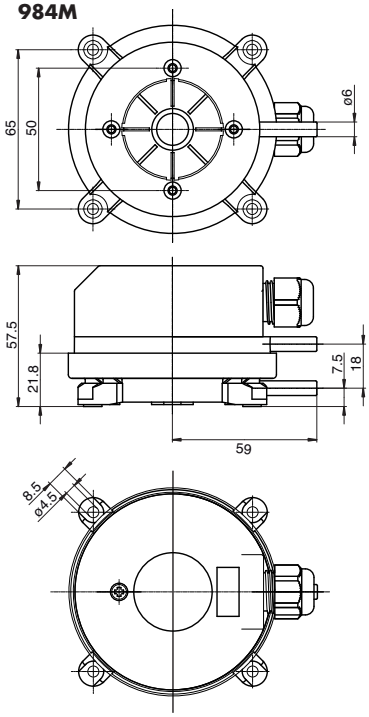

Mounting bracket 6481

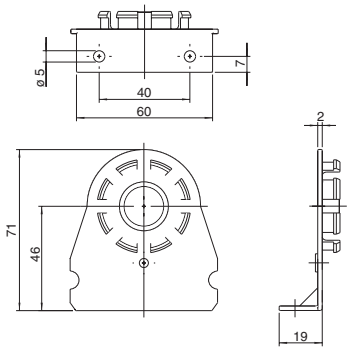

Mounting bracket 6482

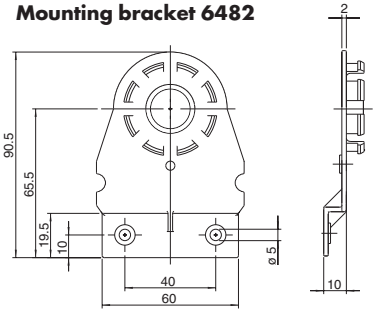

Climaset® 6550/6556

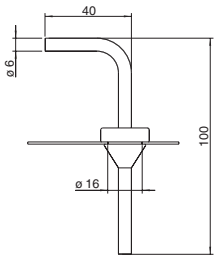

Climaset® 6555/6557

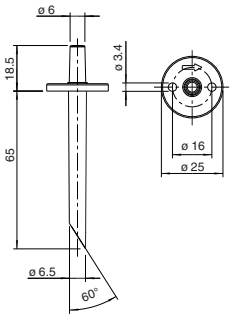

Mounting bracket 6401

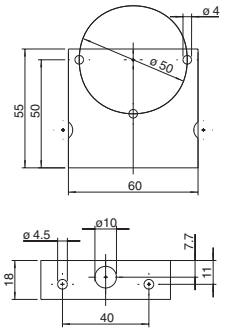

Mounting bracket 6402

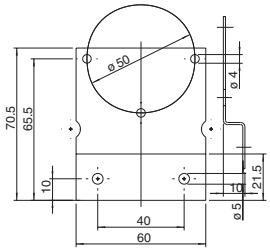

Terminal assignments
3-wire version

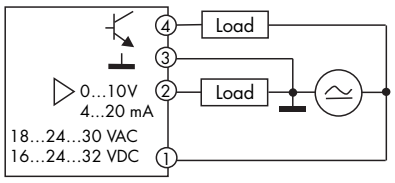

4	SA	Switching output, npn
3	GO	Ground GND
2	Y	Output signal 0 … 10 V / 4 … 20 mA
1	G	Supply voltage 24 VAC/ VDC

2-wire version

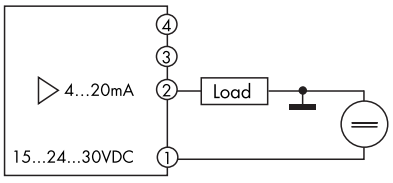

4		
3		
2	Y	Output signal 4 … 20 mA
1	G	Supply voltage 24 VDC

Quality Management
We are certified
DEKRA certified
Voluntary participation in regular monitoring according to ISO 9001:2008

Beck.

The differential pressure transmitter 984A

with automated offset compensation



Differential pressure transmitter 984A

with automated offset compensation



General description

The differential pressure transmitters of the 984A series are used to measure differential pressure, overpressure and vacuum.

They provide 2 pressure ranges and 2 output signals, which are selectable using a jumper.

Applications

Monitoring of gaseous, non-aggressive media. Possible usage areas are:

- Building automation, air conditioning systems and clean room monitoring
- Valve and flap control
- Filter, ventilator and blower monitoring
- Control of air flows

Configurable pressure range

For optimum adaptation to the pressure application, the transmitter can be switched between two pressure ranges. The factory setting is the sensitive range 1, which is selected by fitting a jumper. Removing the jumper activates the non-sensitive range 2.

Configurable response time

The response time of the output signal can be configured using a jumper. If the jumper is in place the response time is slow (factory setting), which is useful for suppressing brief pressure peaks. If the application requires a fast response time the jumper must be removed.

Volume flow measurement (optional)

The shape of the output signal can be switched from linear to square root using a jumper in order to measure the volume flow via a differential pressure.

Output signal selection

The output signal of the 3-wire version is configurable. The factory setting is for a 0 ...10 Volt output signal, but this can be changed to 4 ... 20 mA by removing the jumper.

Automated offset compensation

In regular intervals any drift of the zero-point is automatically compensated. No re-calibration is normally needed which reduces monitoring and maintenance efforts.

Measuring method

Piezoresistive pressure transducer

Mounting position

Can be mounted in any position. The self-compensating piezoresistive pressure transducer eliminates any possible mounting error.

Technical data

Supply voltage • 3-wire version	 22 ... 24 ... 30 VAC/VDC
Output signal • 3-wire version	 0 ... 10 V and 4 ... 20 mA
Load for 4 ... 20 mA output	20 ... 500 Ω
max. current draw	without display < 60 mA with display < 150 mA
Pressure medium	Air and non-aggressive gases
Linearity and hysteresis error	≤ ± 1 % of FS
Working temperature	0...50 °C
Storage temperature	-10 ... 70 °C
Typical long-term stability	≤ ± 0.5 % to ± 2.5 % of FS/year, depending on pressure range
Repetition accuracy	≤ ± 0.2 % of FS
Position dependence	≤ ± 0.02 % of FS/g
Humidity	0 ... 95 % rel, non-condensing
Response time, selectable	1s or 100 ms
Process connection	6 mm hose connection
Electrical connection	Screw terminal block for wires and strands up to 1.5 mm^2
Mounting	Screw mounting with serrated screws
Display, optional	Red LED display, 4 digits
Housing material	Housing with process connection P2 made from ABS, mounting part with process connection P1 made from POM
Housing dimensions	approx. Ø 85 x 58 mm
Weight	approx. 145 g
Protection class acc. to EN 60529	IP 54 with protection cap (delivery condition) or IP 00 without protection cap
Cable conduit for protection cap	M16 or M20x1.5 threaded connection, made of polyamide
Standards / Conformance	EN60770, EN61326 2002/95/EEC (RoHS)

Pressure ranges

Model	Range 1	Range 2	Overload capacity	Bursting pressure	Temperature error of FS
984A.503	0 ... 25 Pa	0 ... 50 Pa	20 kPa	40 kPa	≤ ± 5 % of FS
984A.513	0 ... 50 Pa	0 ... 100 Pa	20 kPa	40 kPa	≤ ± 5 % of FS
984A.523	0 ... 100 Pa	0 ... 250 Pa	20 kPa	40 kPa	≤ ± 2.5 % of FS
984A.533	0 ... 250 Pa	0 ... 500 Pa	20 kPa	40 kPa	≤ ± 2.5 % of FS
984A.543	0 ... 500 Pa	0 ... 1,000 Pa	20 kPa	40 kPa	≤ ± 1.5 % of FS
984A.553	0 ... 1 kPa	0 ... 2.5 kPa	40 kPa	70 kPa	≤ ± 1 % of FS
984A.573	0 ... 5 kPa	0 ... 10 kPa	60 kPa	120 kPa	≤ ± 1 % of FS
984A.593	0 ... 25 kPa	0 ... 50 kPa	300 kPa	500 kPa	≤ ± 1 % of FS
984A.5B3	0 ... 100 kPa	0 ... 250 kPa	1.2 MPa	2 MPa	≤ ± 1 % of FS

Order matrix

IP protection class	IP 54 with cable conduit M16x1.5		**984A.**	5				
	IP 54 with cable conduit M20x1.5			3				
Configurable pressure ranges	**0 ... 25 Pa (0.25 mbar)**	0 ... 50 Pa (0.5 mbar)			0			
	0 ... 50 Pa (0.5 mbar)	0 ... 100 Pa (1.0 mbar)			1			
	0 ... 100 Pa (1.0 mbar)	0 ... 250 Pa (2.5 mbar)			2			
	0 ... 250 Pa (2.5 mbar)	0 ... 500 Pa (5.0 mbar)			3			
	0 ... 500 Pa (5.0 mbar)	0 ... 1.000 Pa (10 mbar)			4			
	0 ... 1 kPa (10 mbar)	0 ... 2,5 kPa (25 mbar)			5			
	0 ... 5 kPa (50 mbar)	0 ... 10 kPa (100 mbar)			7			
	0 ... 25 kPa (250 mbar)	0 ... 50 kPa (500 mbar)			9			
	0 ... 100 kPa (1,000 mbar)	0 ... 250 kPa (2,500 mbar)			B			
Pressure unit	Pascal					3		
Output signal and supply voltage	**0 ... 10 Volt** or 4 ... 20 mA, 3-wire, 24 VAC/VDC, without switching output						7	
	4 ... 20 mA or 0 ...10 Volt, 3-wire, 24 VAC/VDC, without switching output						D	
Display	no display							0
	with LED-display, 3.5 digits							1
Electrical connection via screw terminal block								4

Factory settings printed in bold type.

Accessories

Metal mounting bracket S-shaped	Article No. 6402
Metal mounting bracket L-shaped	Article No. 6401
Snap-on plastic bracket S-shaped	Article No. 6482
Snap-on plastic bracket L-shaped	Article No. 6481
Climaset® consisting of 2m PVC hose and 2 plastic pipes	Article No. 6555
Climaset® consisting of 2m Silicone hose and 2 plastic pipes	Article No. 6557
Climaset® consisting of 2m PVC hose and 2 angled metal pipes	Article No. 6550
Climaset® consisting of 2m Silicone hose and 2 angled metal pipes	Article No. 6556
Duct connecting pipe for Climaset® 6555	Article No. 6551
Angled metal pipe for Climaset® 6550	Article No. 6552
Rubber grommet for Climaset® 6550	Article No. 6553
Roll with 100 m PVC hose	Article No. 6424
M20x1.5 cable conduit including seal and counter screw	Article No. 6568
M16x1.5 cap-nut cable conduit	Article No. 6562
NPT1/2" cable conduit without insert	Article No. 6561
Folding box for individual packing (without accessories)	Article No. 6428
Folding box for individual packing (with accessories)	Article No. 6429

Differential pressure transmitter 984A

with automated offset compensation

984A

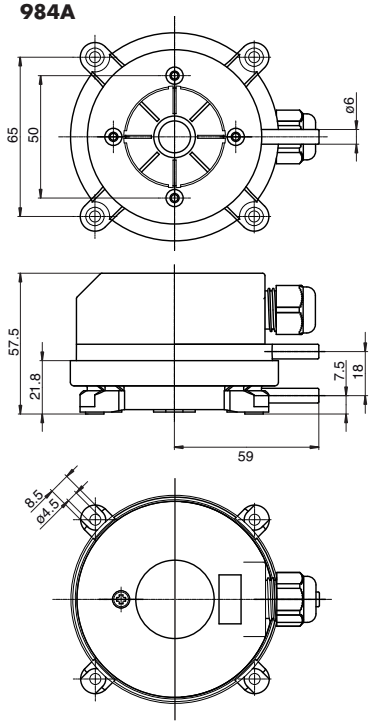

Mounting bracket 6481

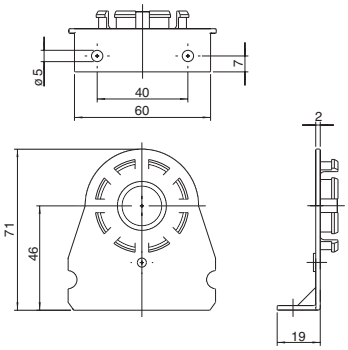

Mounting bracket 6482

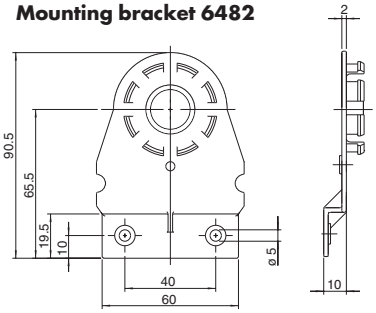

Climaset® 6550/6556

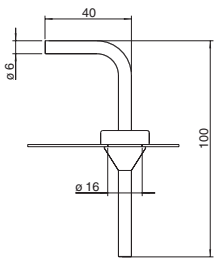

Climaset® 6555/6557

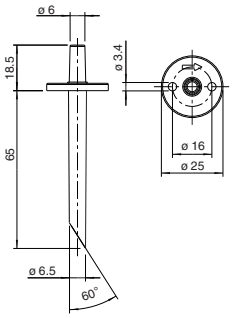

Mounting bracket 6401

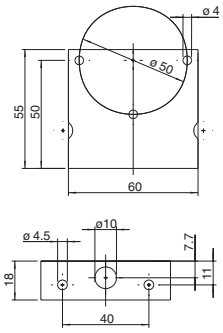

Mounting bracket 6402

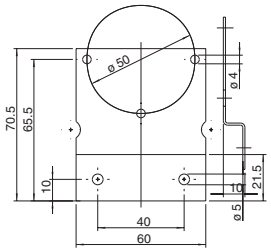

Terminal assignments
3-wire version

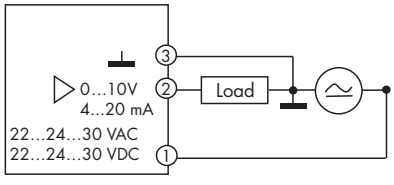

3	GO	Ground GND
2	Y	Output signal 0 ... 10 V / 4 ... 20 mA
1	G	Supply voltage 24 VAC/ VDC

ISO 9001:2008 DEKRA certified
Quality Management
We are certified
Voluntary participation in regular monitoring according to ISO 9001:2008

Beck.

The differential pressure transmitter for air IP 65

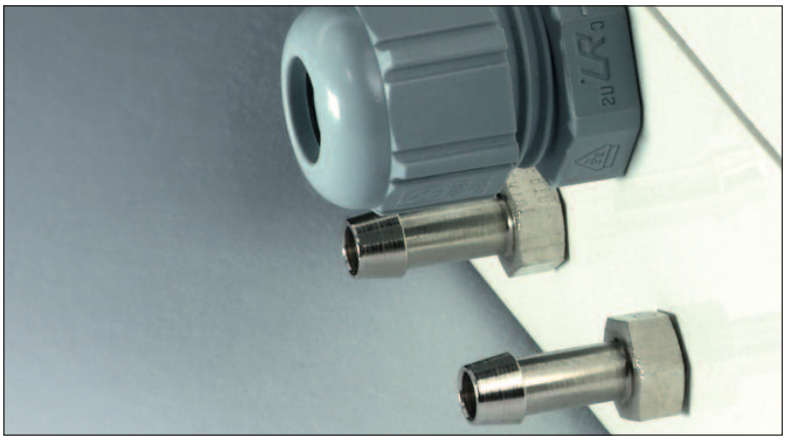

Differential pressure transmitter 985M



General description

The differential pressure transmitters of the 985M series are used to measure differential pressure, overpressure and vacuum.

They provide 2 pressure ranges and 2 output signals, which are selectable using a jumper.

Applications

Monitoring of gaseous, non-aggressive media. Possible usage areas are:

- Building automation, air conditioning systems and clean room monitoring
- Valve and flap control
- Filter, ventilator and blower monitoring
- Control of air flows

Configurable pressure range

For optimum adaptation to the pressure application, the transmitter can be switched between two pressure ranges. The factory setting is the sensitive range 1, which is selected by fitting a jumper. Removing the jumper activates the non-sensitive range 2.

Volume flow measurement

The shape of the output signal can be switched from linear to square root using a jumper in order to measure the volume flow via a differential pressure.

Output signal selection

The output signal of the 3-wire version is configurable. The factory setting is for a 0 ...10 Volt output signal, but this can be changed to 4 ... 20 mA by removing the jumper. The 2-wire version is only available with a 4 ... 20 mA output signal.

Easy offset calibration

The output signal can be calibrated to zero by pressing the M key (pressure transmitter must be depressurised).

Switching output (not available with 2-wire version)

As well as an analogue output signal, the differential pressure transmitter contains an adjustable transistor switching output with a maximum switching capacity of 35 VDC/100 mA.

Measuring method

Piezoresistive pressure transducer

Mounting position

Can be mounted in any position. The self-compensating piezoresistive pressure transducer eliminates any possible mounting error.

Technical data

Supply voltage	
• 3-wire version	24 VAC/VDC
• 2-wire version	24 VDC
Output signal	
• 3-wire version	0 ... 10 V and 4 ... 20 mA
• 2-wire version	4 ... 20 mA
Load for 4 ... 20 mA output	20 ... 500 Ω
Pressure medium	Air and non-aggressive gases
Linearity and hysteresis error	≤ ± 1 % of FS
Working temperature	0...50 °C
Storage temperature	-10 ... 70 °C
Typical long-term stability	≤ ± 0.5 % to ± 2.5 % of FS/year, depending on pressure range
Repetition accuracy	≤ ± 0.2 % of FS
Position dependence	≤ ± 0.02 % of FS/g
Humidity	0 ... 95 % rel, non-condensing
Response time, selectable	1s or 100 ms
Process connection	6 mm hose connection brass nickel-plated
Electrical connection	Screw terminal block for wires and strands up to 1.5 mm²
Mounting	Screw mounting with serrated screws
Display, optional	Red LED display, 4 digits
Housing material	ABS
Housing dimensions	approx. 81 x 83 x 60 mm
Weight	approx. 175 g
Protection class	IP 65
Cable conduit for protection cap	M12 x 1.5 threaded connection, made of polyamide
CE Conformity	2004/108/EC (EMC) 2002/95/EC (RoHS)

Pressure ranges

Model	Range 1	Range 2	Overload capacity	Bursting pressure	Temperature error of FS
985M.323	**0 ... 100 Pa**	0 ... 250 Pa	20 kPa	40 kPa	≤ ± 5 % v. EW
985M.333	**0 ... 250 Pa**	0 ... 500 Pa	20 kPa	40 kPa	≤ ± 5 % v. EW
985M.343	**0 ... 500 Pa**	0 ... 1.000 Pa	20 kPa	40 kPa	≤ ± 2.5 % v. EW
985M.353	**0 ... 1 kPa**	0 ... 2.5 kPa	40 kPa	70 kPa	≤ ± 1 % v. EW
985M.373	**0 ... 5 kPa**	0 ... 10 kPa	60 kPa	120 kPa	≤ ± 1 % v. EW
985M.393	**0 ... 25 kPa**	0 ... 50 kPa	300 kPa	500 kPa	≤ ± 1 % v. EW
985M.3B3	**0 ... 100 kPa**	0 ... 250 kPa	1.2 MPa	2 MPa	≤ ± 1 % v. EW

Other pressure ranges upon request.

Order matrix

Configurable pressure ranges	**0 ... 100 Pa (1.0 mbar)**	0 ... 250 Pa (2.5 mbar)	985M.3	2					
	0 ... 250 Pa (2.5 mbar)	0 ... 500 Pa (5.0 mbar)		3					
	0 ... 500 Pa (5.0 mbar)	0 ... 1,000 Pa (10 mbar)		4					
	0 ... 1 kPa (10 mbar)	0 ... 2.5 kPa (25 mbar)		5					
	0 ... 5 kPa (50 mbar)	0 ... 10 kPa (100 mbar)		7					
	0 ... 25 kPa (250 mbar)	0 ... 50 kPa (500 mbar)		9					
	0 ... 100 kPa (1,000 mbar)	0 ... 250 kPa (2,500 mbar)		B					
Pressure unit	Pascal					3			
Output signal and supply voltage	**0 ... 10 Volt** and 4 ... 20 mA, 3-wire, 24 VAC/VDC, with switching output						1		
	4 ... 20 mA, 2-wire, 24 VDC, without switching output						2		
	4 ... 20 mA and 0 ... 10 Volts, 3-wire, 24 VAC/VDC, with switching output						3		
	0 ... 10 Volt and 4 ... 20 mA, 3-wire, 24 VAC/VDC, without switching output						7		
	4 ... 20 mA and 0 ...10 Volts, 3-wire, 24 VAC/VDC, without switching output						D		
Display	No display							0	
	With LED-Display, 3.5 digits (not for 4 ... 20 mA output, 2-wire)							1	
Electrical connection via screw terminal block									4

Factory settings printed in bold type.

Accessories

Climaset® consisting of 2m PVC hose and 2 plastic pipes	Article No. 6555
Climaset® consisting of 2m Silicone hose and 2 plastic pipes	Article No. 6557
Climaset® consisting of 2m PVC hose and 2 angled metal pipes	Article No. 6550
Climaset® consisting of 2m Silicone hose and 2 angled metal pipes	Article No. 6556
Duct connecting pipe for Climaset® 6555	Article No. 6551
Angled metal pipe for Climaset® 6550	Article No. 6552
Rubber grommet for Climaset® 6550	Article No. 6553
Roll with 100 m PVC hose	Article No. 6424
Roll with 100 m Silicone hose	Article No. 6425

Differential pressure transmitter 985M

985M

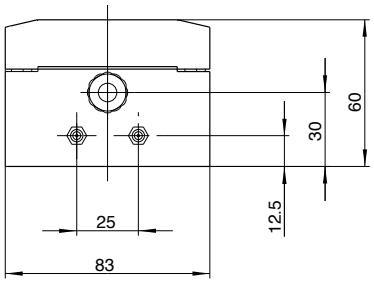

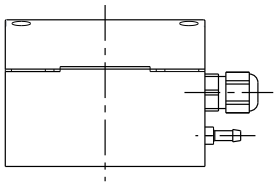

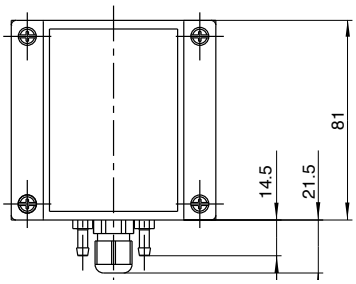

Drilling template

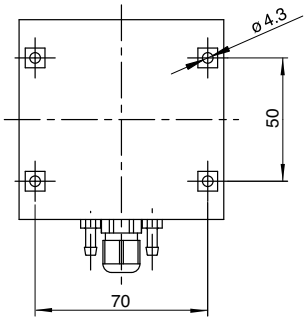

Climaset® 6550/6556

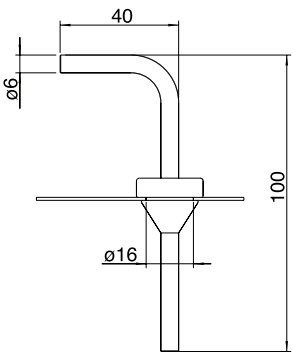

Climaset® 6555/6557

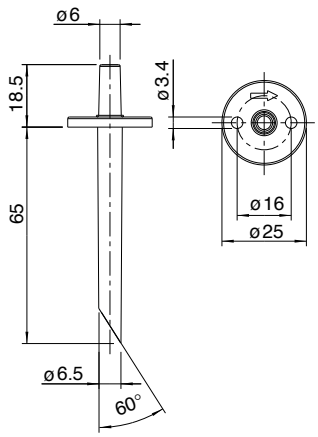

Terminal assignments
3-wire version

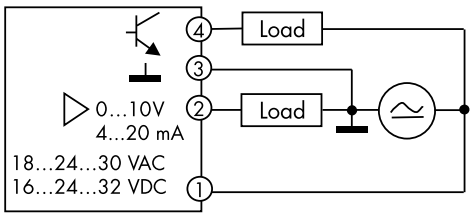

4	SA	Switching output, npn
3	GO	Ground GND
2	Y	Output signal 0 ... 10 V / 4 ... 20 mA
1	G	Supply voltage 24 VAC/ VDC

2-wire version

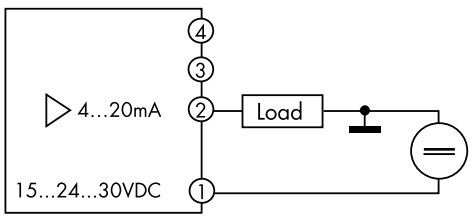

4		
3		
2	Y	Output signal 4 ... 20 mA
1	G	Supply voltage 24 VDC

Beck.

The differential pressure transmitter 985A for air

with automated offset compensation

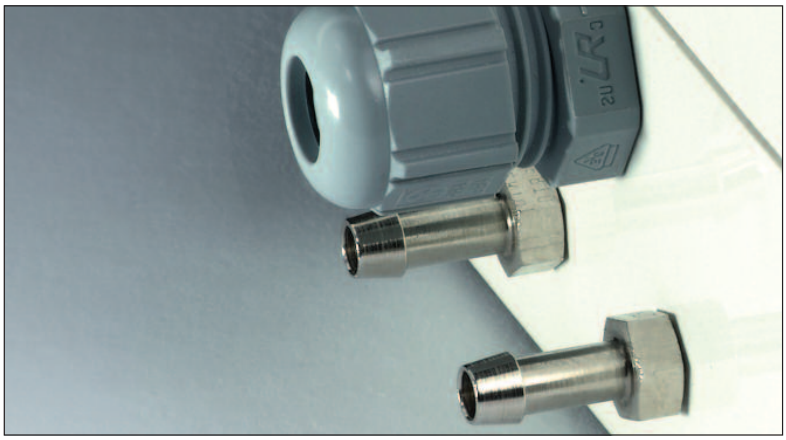

Differential pressure transmitter 985A

with automated offset compensation



General description

The differential pressure transmitters of the 985A series are used to measure differential pressure, overpressure and vacuum.

They provide 2 pressure ranges and 2 output signals, which are selectable using a jumper.

Applications

Monitoring of gaseous, non-aggressive media. Possible usage areas are:

- Building automation, air conditioning systems and clean room monitoring
- Valve and flap control
- Filter, ventilator and blower monitoring
- Control of air flows

Configurable pressure range

For optimum adaptation to the pressure application, the transmitter can be switched between two pressure ranges. The factory setting is the sensitive range 1, which is selected by fitting a jumper. Removing the jumper activates the non-sensitive range 2.

Configurable response time

The response time of the output signal can be configured using a jumper. If the jumper is in place the response time is slow (factory setting), which is useful for suppressing brief pressure peaks. If the application requires a fast response time the jumper must be removed.

Volume flow measurement

The shape of the output signal can be switched from linear to square root using a jumper in order to measure the volume flow via a differential pressure.

Output signal selection

The output signal of the 3-wire version is configurable. The factory setting is for a 0 ...10 Volt output signal, but this can be changed to 4 ... 20 mA by removing the jumper.

Automated offset compensation

In regular intervals any drift of the zero-point is automatically compensated.
No re-calibration is normally needed which reduces monitoring and maintenance efforts.

Measuring method

Piezoresistive pressure transducer

Mounting position

Can be mounted in any position. The self-compensating piezoresistive pressure transducer eliminates any possible mounting error.

Technical data

Supply voltage • 3-wire version	 22 ... 24 ... 30 VAC/VDC
Output signal • 3-wire version	 0 ... 10 V and 4 ... 20 mA
Load for 4 ... 20 mA output	20 ... 500 Ω
max. current draw	without display < 60 mA with display < 150 mA
Pressure medium	Air and non-aggressive gases
Linearity and hysteresis error	≤ ± 1 % of FS
Working temperature	0...50 °C
Storage temperature	-10 ... 70 °C
Typical long-term stability	≤ ± 0.5 % to ± 2.5 % of FS/year, depending on pressure range
Repetition accuracy	≤ ± 0.2 % of FS
Position dependence	≤ ± 0.02 % of FS/g
Humidity	0 ... 95 % rel, non-condensing
Response time, selectable	1s or 100 ms
Process connection	4 and 6 mm hose connection brass nickel-plated
Electrical connection	Screw terminal block for wires and strands up to 1.5 mm^2
Mounting	Screw mounting with serrated screws
Display, optional	Red LED display, 4 digits
Housing material	ABS
Housing dimensions	approx. 81 x 83 x 60 mm
Weight	approx. 190 g
Protection class	IP 65
Cable conduit for protection cap	M12x1.5 threaded connection, made of polyamide
CE Conformity	2004/108/EC (EMC) 2002/95/EC (RoHS)

Pressure ranges

Model	Range 1	Range 2	Overload capacity	Bursting pressure	Temperature error of FS
985A.303	0 ... 25 Pa	0 ... 50 Pa	20 kPa	40 kPa	≤ ± 5 % of FS
985A.313	0 ... 50 Pa	0 ... 100 Pa	20 kPa	40 kPa	≤ ± 5 % of FS
985A.323	0 ... 100 Pa	0 ... 250 Pa	20 kPa	40 kPa	≤ ± 2.5 % of FS
985A.333	0 ... 250 Pa	0 ... 500 Pa	20 kPa	40 kPa	≤ ± 2.5 % of FS
985A.343	0 ... 500 Pa	0 ... 1,000 Pa	20 kPa	40 kPa	≤ ± 1.5 % of FS
985A.353	0 ... 1 kPa	0 ... 2.5 kPa	40 kPa	70 kPa	≤ ± 1 % of FS
985A.373	0 ... 5 kPa	0 ... 10 kPa	60 kPa	120 kPa	≤ ± 1 % of FS
985A.393	0 ... 25 kPa	0 ... 50 kPa	300 kPa	500 kPa	≤ ± 1 % of FS
985A.3B3	0 ... 100 kPa	0 ... 250 kPa	1.2 MPa	2 MPa	≤ ± 1 % of FS

Order matrix

Configurable pressure ranges	**0 ... 25 Pa (0.25 mbar)**	0 ... 50 Pa (0.5 mbar)	985A.3	0				
	0 ... 50 Pa (0.5 mbar)	0 ... 100 Pa (1.0 mbar)		1				
	0 ... 100 Pa (1.0 mbar)	0 ... 250 Pa (2.5 mbar)		2				
	0 ... 250 Pa (2.5 mbar)	0 ... 500 Pa (5.0 mbar)		3				
	0 ... 500 Pa (5.0 mbar)	0 ... 1,000 Pa (10 mbar)		4				
	0 ... 1 kPa (10 mbar)	0 ... 2.5 kPa (25 mbar)		5				
	0 ... 5 kPa (50 mbar)	0 ... 10 kPa (100 mbar)		7				
	0 ... 25 kPa (250 mbar)	0 ... 50 kPa (500 mbar)		9				
	0 ... 100 kPa (1,000 mbar)	0 ... 250 kPa (2,500 mbar)		B				
Pressure unit	Pascal				3			
Output signal and	**0 ... 10 Volt** and 4 ... 20 mA, 3-wire, 24 VAC/VDC, without switching output					7		
	4 ... 20 mA and 0 ...10 Volts, 3-wire, 24 VAC/VDC, without switching output					D		
Display	No display						0	
	With LED-Display, 3.5 digits						1	
Electrical connection via screw terminal block								4

Factory settings printed in bold type.

Accessories

Climaset® consisting of 2m PVC hose and 2 plastic pipes	Article No. 6555
Climaset® consisting of 2m Silicone hose and 2 plastic pipes	Article No. 6557
Climaset® consisting of 2m PVC hose and 2 angled metal pipes	Article No. 6550
Climaset® consisting of 2m Silicone hose and 2 angled metal pipes	Article No. 6556
Duct connecting pipe for Climaset® 6555	Article No. 6551
Angled metal pipe for Climaset® 6550	Article No. 6552
Rubber grommet for Climaset® 6550	Article No. 6553
Roll with 100 m PVC hose	Article No. 6424
Roll with 100 m Silicone hose	Article No. 6425

Differential pressure transmitter 985A

with automated offset compensation

985A

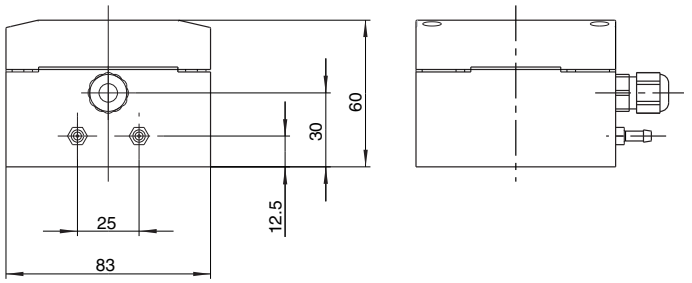

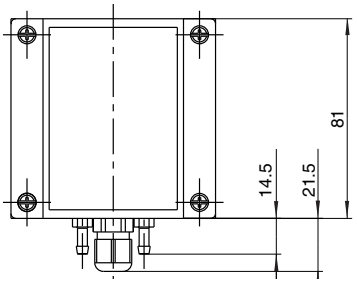

Drilling template

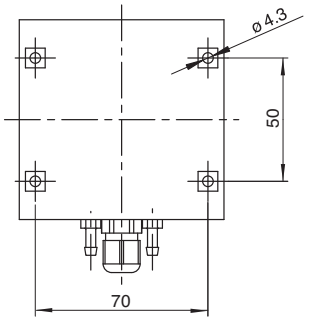

Climaset® 6550/6556

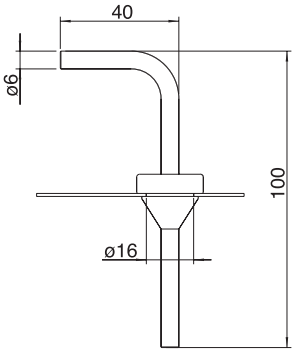

Climaset® 6555/6557

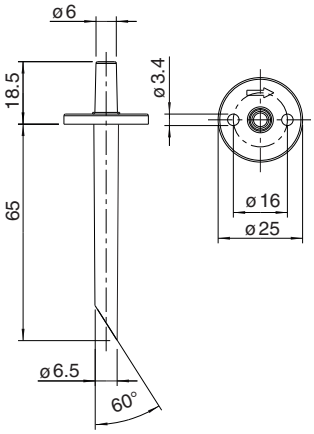

Terminal assignments
3-wire version

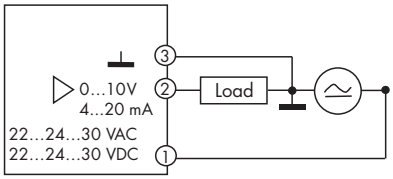

3	GO	Ground GND
2	Y	Output signal 0 ... 10 V / 4 ... 20 mA
1	G	Supply voltage 24 VAC/ VDC

QUALITY MANAGEMENT Certificate
Voluntary participation in regular monitoring according to ISO 9001:2000

Beck.

The differential pressure gauge display P2 for air.



Differential pressure gauge display P2

General description
The differential pressure gauges display P2 for panel mounting are used for the measurement of differential, positive and vacuum pressures.
They offer an adjustable measurement range and two output signals, which can be selected in the menu.
Type 990M with manual zeroing
Type 990A with automatic zeroing

Applications
Monitoring of gaseous, non-corrosive media.
Possible areas of use are:

- Building automation, air-conditioning and clean-room technology
- Valve and damper control
- Filter, fan and blower monitoring
- Air flow control

Adjustable pressure measurement range
For optimal matching to the technical application, the pressure range can be continously set in the pressure range from 20% to 100% of the final value. In addition, the instrument offers three different units of pressure, which can likewise be selected in the menu.

Switchable units of pressure
Pa, mbar, inWC.

Adjustable response time
The response time of the output signal can be switched in the menu in the range 0.1 to 20s.

Volume flow measurement
Optionally, when measuring a volume flow via a differential pressure, it is possible to switch the output signal from linear to square-root format in the menu.

Switchable output signal
The output signal can be changed over in the menu. As supplied, the output signal is 0 ... 10V, switchable to 4 ... 20mA

Easy zeroing
When the gauge is depressurised, the output signal can easily be manually zeroed from the menu. The differential pressure gauge automatically zeroes itself at regular intervals. This reduces drift behaviour and simultaneously reduces the countrol and maintenance requirement.

Switching output
Alongside the analogue output signal, the differential pressure gauge has two adjustable relay switching outputs with a maximum switching capability of 250VAC/5A.

Measurement process
Piezo-resistive pressure transducer

Technical data

Supply voltage	
Type 990M with manual zeroing	16 ... 32VDC 18 ... 30VAC
Type 990A with automatic zeroing	22 ... 30VDC/AC
Optional wall power supply	100 ... 240VAC(In)/24VDC(Out) (50 ... 60Hz)
Output signal	0 ... 10V and 4 ... 20mA
Working resistance for output 4 ... 20mA	20 ... 480Ω
Power consumption	< 100mA for DC < 250mA for AC
Pressure medium	Air and non-agressive gases
Linearity and hysteresis error	≤ ± 1% of FS
Operating temperature	0 ... 50°C
Storage temperature	- 10 ... 70°C
Long-term stability, typical	≤ ± 0,5% to ± 2,5% of FS/year, Dependent on pressure range
Repeatability	≤ ± 0.2% of FS
Position dependence	≤ ± 0.02% of FS/g
Humidity	0 ... 95% rel., non condensing
Response time, switchable	0.0 - 20.0s
Process connection	4mm + 6mm tube connections
Electrical connection	Screw terminals for wires and braided wire up to 1.5mm²
Attachment	Panel mounting in accordance with DIN IEC 61554
Display	Red 7 segment LED display, 4-figure
Instrument dimensions	143mm x 96mm x 48mm
Weight	230g
IP rating after EN 60529	IP20
Standards / Conformity	EN60770, EN61326 2002/95/EC (RoHS)

Pressure measurement ranges

Type	Pa	mbar	inWC	Safe +ve pressure	Burst pressure	Temperature error
990A.303	0 ... 25	0.25	0.10	20 kPa	40 kPa	≤ ± 5 % of FS
990A.313	0 ... 50	0.5	0.20	20 kPa	40 kPa	≤ ± 5 % of FS
990x.323	0 ... 100	1.0	0.40	20 kPa	40 kPa	≤ ±5 % of FS
990x.333	0 ... 250	2.5	1.00	20 kPa	40 kPa	≤ ± 5 % of FS
990x.343	0 ... 500	5.0	2.00	20 kPa	40 kPa	≤ ± 2.5 % of FS
990x.353	0 ... 1 kPa	10	4.00	20 kPa	40 kPa	≤ ± 1 % of FS
990x.363	0 ... 2.5 kPa	25	10.05	40 kPa	70 kPa	≤ ± 1 % of FS
990x.373	0 ... 5 kPa	50	20.10	60 kPa	120 kPa	≤ ± 1 % of FS
990x.383	0 ... 10 kPa	100	40.20	60 kPa	120 kPa	≤ ± 1 % of FS
990x.393	0 ... 25 kPa	250	100.50	300 kPa	500 kPa	≤ ± 1 % of FS
990x.3A3	0 ... 50 kPa	500	200.10	300 kPa	500 kPa	≤ ± 1 % of FS
990x.3B3	0 ... 100 kPa	1,000	402.00	1.2 MPa	2 MPa	≤ ± 1 % of FS
990x.3F3	0 ... 250 kPa	2,500	1,004.75	1.2 MPa	2 MPa	≤ ± 1 % of FS

Order matrix

Zeroing	**Manual**	**Type 990M**						
	Automatic	**Type 990A**						
	Differential pressure		3					
Selectable Pressure measurement ranges	**0 ... 25 Pa** (0.25 mbar)	only for type 990A		0				
	0 ... 50 Pa (0.5 mbar)	only for type 990A		1				
	0 ... 100 Pa (1.0 mbar)			2				
	0 ... 250 Pa (2.5 mbar)			3				
	0 ... 500 Pa (5.0 mbar)			4				
	0 ... 1kPa (10 mbar)			5				
	0 ... 2.5 kPa (25 mbar)			6				
	0 ... 5 kPa (50 mbar)			7				
	0 ... 10 kPa (100 mbar)			8				
	0 ... 25 kPa (250 mbar)			9				
	0 ... 50 kPa (500 mbar)			A				
	0 ... 100 kPa (1,000 mbar)			B				
	0 ... 250 kPa (2,500 mbar)			F				
Unit of pressure	**Pascal (kPa)**, mbar, inWC				3			
Output signal	**0 ...** 10 V or 4 ... 20 mA, with 2 switching outputs					1		
	4 ... 20 mA or 0 ... 10 V, with 2 switching outputs					3		
Display	Red 7 segment LED display, 4-figure						1	
Electrical connection, screw terminals 24VAC/VDC								4
Wall power supply 100 to 240VAC (50 to 60Hz)								5

Designations in bold are factory settings.

Accessories

Climaset® comprising 2m PVC tube and 2 plastic nipples	Article no. 6555
Climaset® comprising 2m silicone tube and 2 plastic nipples	Article no. 6557
Climaset® comprising 2m PVC tube and 2 angled metal tubes	Article no. 6550
Climaset® comprising 2m silicone tube and 2 angled metal tubes	Article no. 6556
Duct connection nipple for Climaset® 6555	Article no. 6551
Angled metal tube for Climaset® 6550	Article no. 6552
Rubber grommet for metal tube from Climaset® 6550	Article no. 6553
Roll with 100 m PVC-tube	Article no. 6424
Wall power supply	Article no. 6505
Front frame (as separate accessory)	Article no. 6506

Differential pressure gauge display P2

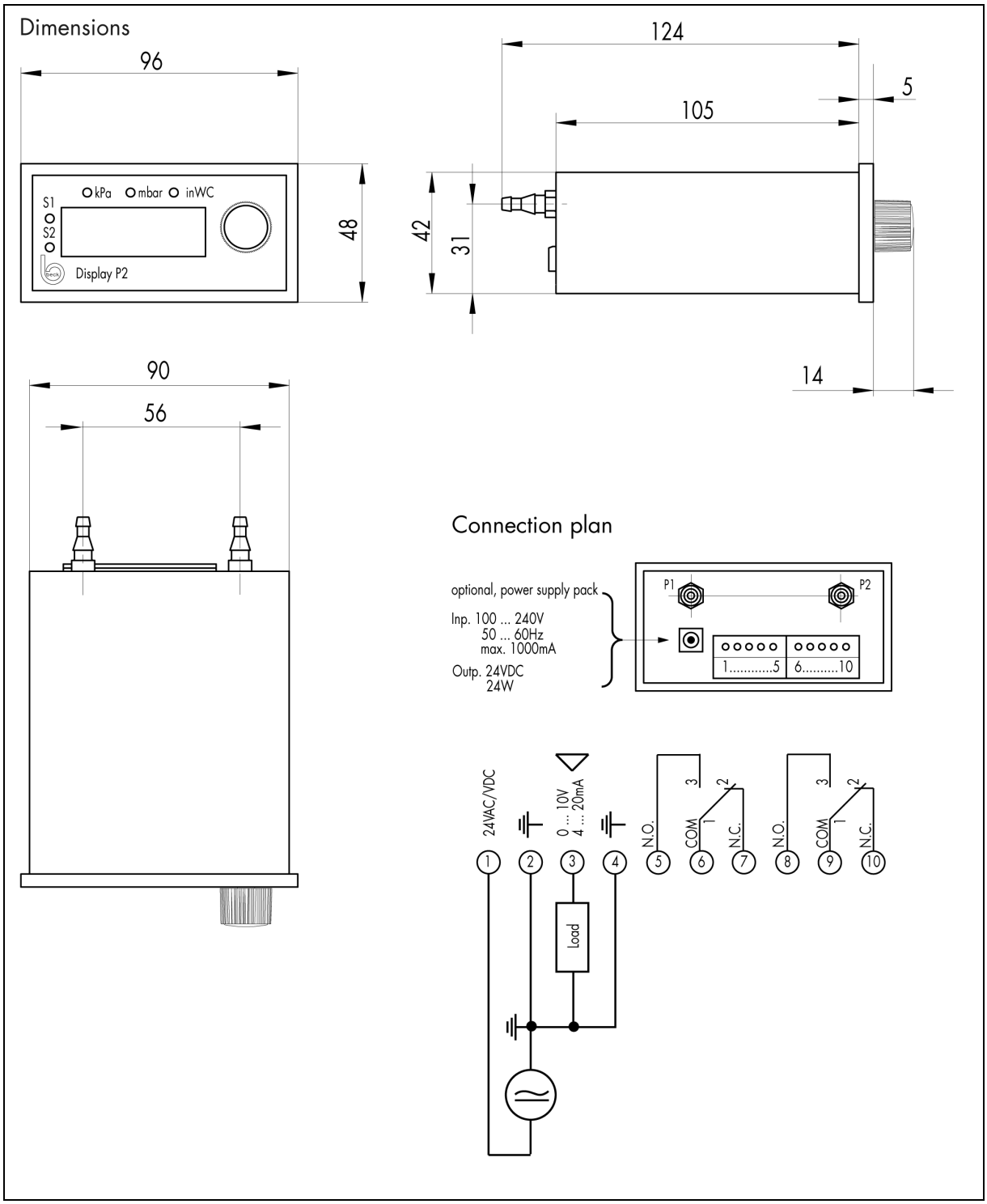

990x_data_english 7/11 Technical data subjekt to change without prior notice Copyright © 2011 Beck GmbH

Order Code for Beck Pressure Switches 901 and 901 Prescal®

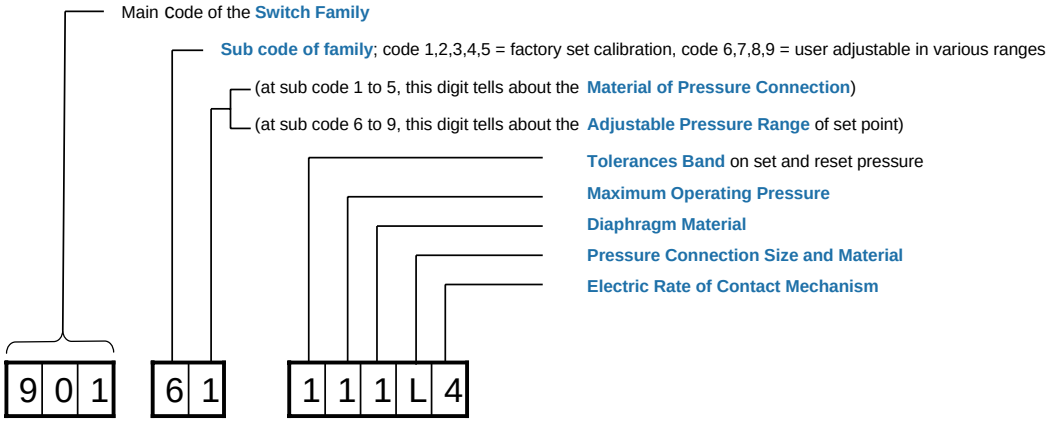

Order Code for Beck Pressure Switches 901 and 901 Prescal®

9	0	1	1	1	1	1	1	L	4

Switch family: 901 Mechanical Pressure Switch family 901

9	0	1	6	1	1	1	1	L	4

Sub code family:

1	Factory-set over-pressure from 5 mbar up to 1.000 mbar; with a max. operating pressure of 0.5 or 1.0 bar
2	Factory-set vacuum from -5 mbar to -900mbar; with a max. operating pressure of 0.5 bar or 1.0 bar
3	Factory-set differential pressure from 5 up to 50 mbar: with a max. operating pressure of 100 mbar
4	Factory-set over-pressure from 500 mbar up to 3 bar: with a max. operating pressure of 10 bar
5	Factory-set high-pressure from 1 bar up to 12 bar: with a max. operating pressure of 25 bar
6	Adjustable pressure range from 5 mbar up to 3 bar: with max. operating pressure 0.5 bar, 1 bar or 7 bar
7	Adjustable vacuum range from -5 to -700 mbar: with max. operating pressure 0,5 bar, 1,0 bar
8	Adjustable differential pressure range (from 5 to 50 mbar: with a max. operating pressure of 100 mbar
9	Adjustable high-pressure range from 1,0 bar up to 12 bar: with a max operating pressure of 25 bar

9	0	1	1	1	1	1	1	L	4

Material of Pressure Connection: (only for Factory-set Pressure Switches of **Family Sub Code 1...5**)

0	plastic (could be PA6, PPS, PVDF)
1	metal (could be brass, brass nickel-plated or stainless steel)

Order Code for Beck Pressure Switches 901 and 901 Prescal®

9	0	1	6	1	1	1	1	L	4

Adjustable Pressure Ranges

(only for the user adjustable Pressure Switches 901 Prescal® of the **Family Sub Codes 6...9**)

Code	type	range
1	(61)	5.....20 mbar
2	(62)	10.....50 mbar
3	(63)	25.....100 mbar
4	(64)	50.....250 mbar
5	(65)	100…..500 mbar
6	(66)	250...1.000 mbar
7	(67)	500...1.500 mbar
8	(68)	1.000...3.000 mbar

Code	type	range
1	(71)	-5.... ..-20 mbar
2	(72)	-10.....-50 mbar
3	(73)	-25…..-100 mbar
4	(74)	-50…..-125 mbar
5	(75)	-75…..-200 mbar
6	(76)	-100…..-300 mbar
7	(77)	-200…..-500 mbar
8	(78)	-300…..-700 mbar

1	(91)	1.0.....6.0 bar
2	(92)	4.0 .....9.0 bar
3	(93)	7.0….12.0 bar

1	(81)	5.....20 mbar
2	(82)	10.....50 mbar

For detailed information about available ranges and max. operating pressure see our datasheet for Adjustable Pressure Switches 901 Prescal®

Order Code for Beck Pressure Switches 901 and 901 Prescal®

9	0	1	6	1	1	1	1	L	4

Tolerance band on Set and Reset Pressure:

1	standard precision	+ - 10%
2	high precision	+ - 5% (available only on request and additional charges)

9	0	1	6	1	1	1	1	L	4

Maximum Operating Pressure:

1	standard
2	extended to 4 bar (only instead of max. operating pressure of 0.5 bar or 1.0 bar)

9	0	1	6	1	1	1	1	L	4

Diaphragm Material:

1	NBR
2	EPDM
3	Silicone (VMQ)
4	FKM Viton®
5	NBR for gas switches with DVGW certificate
6	Silicone (VMQ) with Parylene® C coating
7	FKM Spezial for saturated steam up to max. 140°C
8	EPDM according to FDA 21-CFR
9	Chemraz®, for -20°C to +230°C

Order Code for Beck Pressure Switches 901 and 901 Prescal®

9	0	1		6	1		1	1	1	L	4

Pressure Connection Size and Material

Code	Material	Shape	Size	Mounting Bracket
A	Polyamide PA6	Tube	6.0 mm	6405
B	Polyamide PA6	Tube	6.5 mm	6405
C	Polyamide PA6	Tube	10 mm	6405
D	Polyamide PA6	Thread	1/8	6404
E	Polyamide PA6	Thread	M10x1	6404
F	PPS	Tube	6.5 mm	6405
G	PPS	Tube	10 mm	6405
H	PVDF	Thread	M10x1	6404
J	PVDF	Thread	1/8	6404
K	PVDF	Thread	1 /4	6403
L	CuZn40 (brass)	Thread	1 /4	6403
M	CuZn40 (brass)	Thread	1 /8	6404
N	CuZn40 (brass)	Thread	M10x1	6404
O	CuZn40 (brass)	Thread	3 /8	n.a.
P	V2A	Thread	M10x1	6404
Q	V2A	Thread	1 /8	6404
R	V2A	Thread	1 /4	6403
S	CuZn40 (brass)	Thread	1 /2	n.a.
T	PP	Thread	M10x1	6404
U	PP	Tube	6.5 mm	6405
V	CuZn40 (brass) nickel-plated	Thread	1 /4	6403

Order Code for Beck Pressure Switches 901 and 901 Prescal®

9	0	1	6	1	1	1	1	L	4

Electric Rate of Contact Mechanism:	1	0.1 A	12 VDC	gold-plated contacts
	2	6 A	250 VAC	AgCdO contacts; non RoHS conform
	3	10 A	250 VAC	AgCdO contacts; non RoHS conform
	4	6 A	250 VAC	Standard contact; material AgNi;
	5	10 A	250 VAC	Extra strong contacts; material AgNi

Example 1:

◆ Pressure Switch Family	(901)
◆ Factory-set over pressure at 20 mbar	(1)
◆ metal pressure connection	(1).
◆ Tolerance Band +- 10%	(1)
◆ Diaphragm material NBR	(1)
◆ Max. operating pressure 0,5 bar	(1)
◆ Pressure connection PA 6.5mm tube	(B)
◆ Electrical rating 6A / 250 VAC	(4)

In addition it is necessary to tell the calibration of set and reset pressure, i.e. switching on increasing pressure at 20 mbar, Switching back on decreasing pressure at 10 mbar.

Example 2:

◆ Pressure Switch Family	(901)
◆ Adjustable over-pressure range	(6)
◆ Pressure range 5....20 mbar	(1).
◆ Tolerance Band +- 10%	(1)
◆ Diaphragm material NBR	(1)
◆ Max. operating pressure 0,5 bar	(1)
◆ Pressure connection CuZn 40- G1/4	(L)
◆ Electrical rating 6A / 250 VAC	(4)

Over fifty years of specialisation in pressure monitoring



Walter Beck laid the foundation stone for today's company with a water level indicator for domestic washing machines. Shortly afterwards, he developed a diaphragm pressure switch for monitoring water levels in the first fully-automatic washing machines. Following a phase of vigorous growth, Beck became one of the world's leading manufacturers of pressure switches for large domestic appliances.

In the mid-1970s, Beck developed new markets, extending its customer base by adding numerous industrial application areas. In 1985, Beck presented a differential pressure switch for fan monitoring in gas heating appliances.

At the end of the 1980s, Beck established itself in the ventilation and air-conditioning market with an adjustable differential pressure switch for monitoring air filters and fans. In 2000, Beck rounded off its range of products for this meanwhile important market by adding a transmitter for differential pressure, which further enhanced the company's market position worldwide.

At the same time, Beck still regards itself as a flexible niche provider of customer-specific pressure switches and pressure transmitters for original equipment suppliers in many different sectors. This great diversification in sales markets can be regarded as an important factor in the company's international market success.

QUALITY MANAGEMENT Certificate



Beck sponsors the sailing yacht "Sun Odyssey 34.2" in Kressbronn on Lake Constance for the Yachtclub unter Teck e.V.

beck

Ueprospekt_data_english 03/07

Angst+Pfister
Sensors and Power

We are here for you. Addresses and Contacts.

Headquarter Switzerland:

Angst+Pfister Sensors and Power AG
Thurgauerstrasse 66
CH-8050 Zurich
Phone +41 44 877 35 00
sensorsandpower@angst-pfister.com

Office Germany:

Angst+Pfister Sensors and Power Deutschland GmbH
Edisonstraße 16
D-85716 Unterschleißheim
Phone +49 89 374 288 87 00
sensorsandpower.de@angst-pfister.com

Scan here and get an overview of personal contacts!

sensorsandpower.angst-pfister.com