Assembly Instructions & User's Manual

for

Member's Mark 4 Burner Gas Grill

Item Number: 980304856 / 980302550
Model Number: GR2334401-MM-00
Customer Assistance (spare/replacement parts): 1-888-837-1380
or Email: customerservice@rankam.com

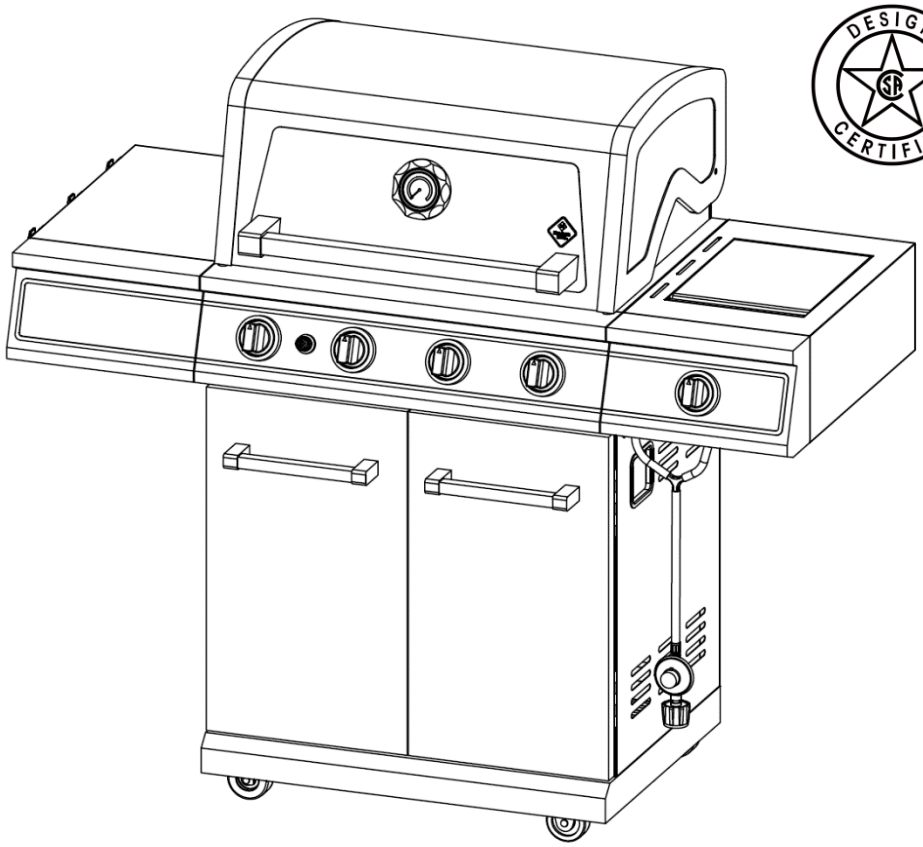

THIS ASSEMBLY MANUAL CONTAINS INPORTANT SAFETY INFORMATION.
PLEASE READ AND KEEP FOR FUTURE REFERENCE.

Table of Contents

Quality Statement 3
Important Safety Information 3
Before Assembly 3
Care & Use 3-6
Package Contents 7-8
Product Information 8
Components 9-13
Hardware 14
Tools 14
Step 1 – Step 23 15-27
 **Warning** 28-31
 **Danger** 32
Troubleshooting 33
Care & Use Instructions 34-38
Technical Data 38
Warranty Information 39



WARNING



1. Do not store or use gasoline or other flammable liquids or vapors in the vicinity of this or any other appliance.
2. An LP cylinder not connected for use shall not be stored in the vicinity of this or any other appliance.



DANGER



If you smell gas:
1. **Shut off gas to the appliance.**
2. **Extinguish any open flame.**
3. **Open lid.**
4. **If odor continues, keep away from the appliance and immediately call your fire department.**

Failure to follow these instructions could result in fire or explosion which could cause property damage, personal injury or death.

Quality Statement



Important Safety Information

- *Please read all instructions carefully before assembling this product.*
- *Where applicable, and for your safety, assembly by an adult is strongly recommended.*
- *Use only vendor-supplied hardware to assemble this item. Using unauthorized hardware could jeopardize the structural integrity of the item.*
- *Hardware may loosen overtime. Periodically check that all connections are tight.*
- *Follow all warnings and instructions when using the appliance.*
- *Failure to follow these instructions and warnings could result in serious product or personal damage.*

Before Assembly

- *Remove all parts and hardware from the box. Place all items on a carpeted or scratch-free work surface, as this will avoid damaging parts during assembly.*
- *The shipping box can provide an ideal work surface if none is available.*
- *Use the components and hardware lists below to identify, inventory and separate each of the hardware and components included.*
- *To avoid accidentally discarding small components or hardware, do not dispose of any packaging or contents of the shipping carton until assembly is complete.*
- ***DO NOT USE** power tools unless it is explicitly identified in this manual as required for use during assembly. Power tools can damage the fasteners, hardware and/or components.*
- *Do not fully tighten all fasteners / screws until all parts are in place. Failure to follow these instructions may cause the fasteners / screws to misalign during assembly.*

Care & Use

- *Use a soft, clean cloth that will not scratch the surface when cleaning.*
- *Gloves are recommended while assembling the grill.*

USE AND INSTALLATION OF LP GAS CYLINDER (PROPANE TANK)

BEFORE INSTALLING:

The installation must conform with local codes or (in the absence of local codes) with either the *National Fuel Gas Code, ANSI Z223.1/NFPA 54, Natural Gas and Propane Installation Code, CSA B149.1,* or *Propane Storage and Handling Code, B149.2, or* the *Standard for Recreational Vehicles, ANSI A 119.2/NFPA 1192*, and *CSA Z240 RV Series, Recreational Vehicle Code*, as applicable.

BEFORE EVERY USE:

Be sure to inspect the hose for leaks, cuts, wear, abrasion, or damage of any sort before using this appliance. If any the hose shows any damage, it must be replaced with a new hose specified by the manufacturer before further use.

LP GAS CYLINDER

The LP (liquid propane) cylinder specifically designed to be used with this unit MUST have a 20 lb. (9.1kg) capacity with a Type 1 cylinder valve and an overfilling protection device (OPD).

LP Tank Valve Requirements:

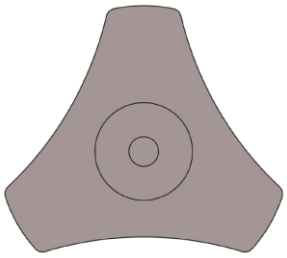

OPD Hand Wheel

- Purchase LP tanks only with these required measurements: 12” (30.5cm) (diameter) x 18” (45.7cm) (tall) with 20lb. (9kg) capacity maximum.
- Type 1 outlet compatible with regulator or appliance.
- Safety relief valve.
- UL-listed Overfill Protection Device (OPD). This OPD safety feature is identified by a unique triangular hand wheel. Use only tanks equipped with this type of valve.
- LP tank must be arranged for vapor withdrawal.
- The LP cylinder must be constructed and marked in accordance with the Specifications for LP-Gas Cylinders of the U.S. Department of Transportation (D.O.T.) or the National Standard of Canada CAN/CSA – B339, Cylinder, Spheres, Tubes for Transportation of Dangerous Goods; and Commission of Dangerous Goods; and Commission, as applicable.

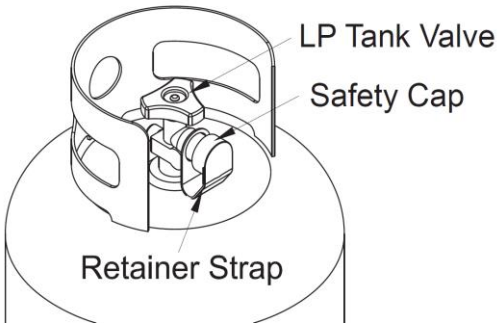

- The LP cylinder must include a collar to protect the cylinder valve.
- When this appliance is not in use, the gas must be turned off at the supply cylinder(s).
- The LP cylinder must be stored outdoors out of the reach of children and MUST NOT be stored in a building, garage, shed, breezeway, or any other enclosed space.
- Storage of an outdoor cooking gas appliance indoors is permissible ONLY if the cylinder is disconnected and removed from the appliance.
- The cylinder should ALWAYS sit in an upright position.

INSTALLING GAS CYLINDER

1. Check that the cylinder valve is closed by turning the knob clockwise.
2. Place the cylinder into cylinder holder and tighten the fixing bolt. Place cylinder such that the valve opening faces the side burner in such a way that the hose is not kinked/damaged.
3. Attach/detach the regulator to LP cylinder only when the cylinder is resting on the cart base properly.

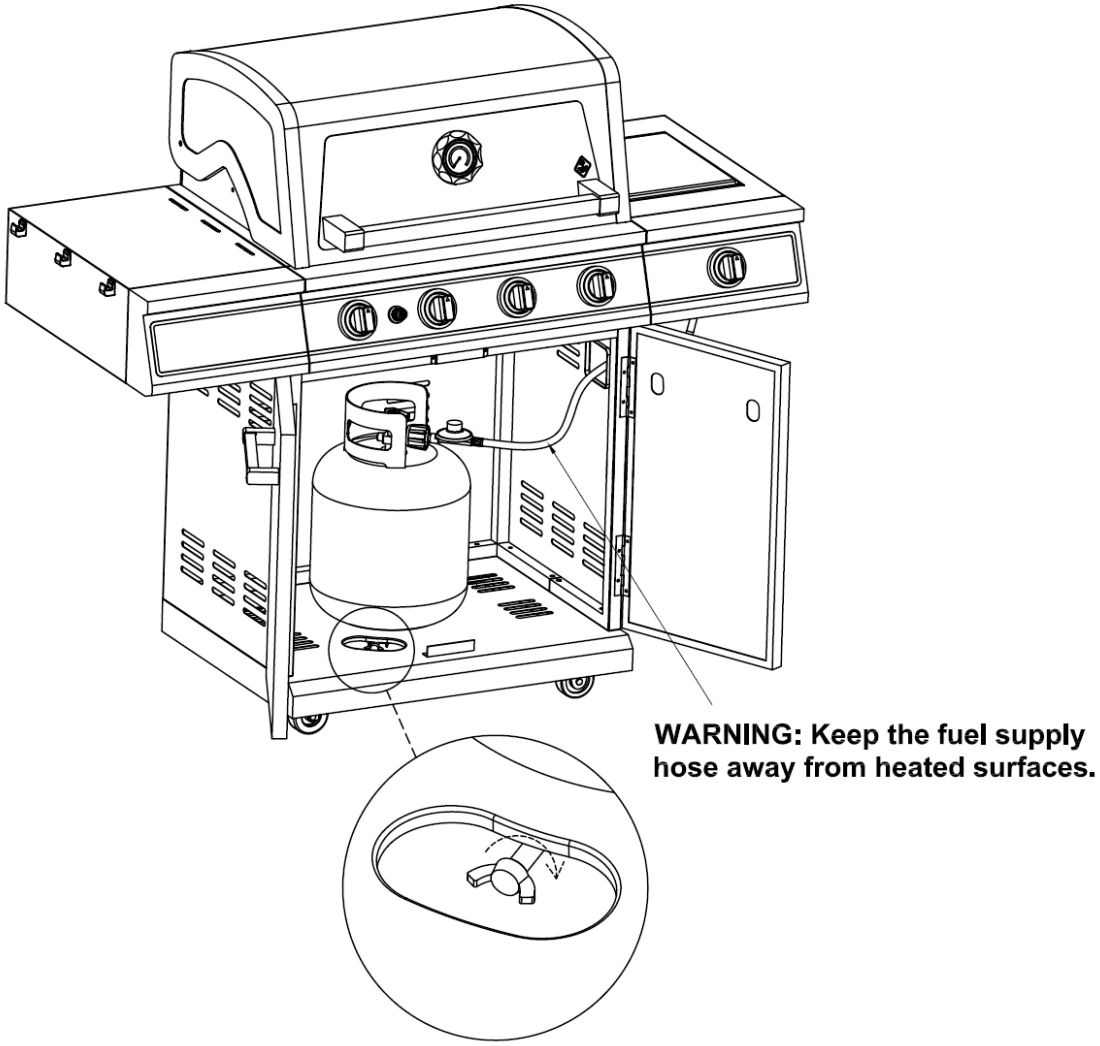

CAUTION

- When installing LP cylinders, the pressure regulator and hose supplied by the manufacturer MUST be used with the appropriate cylinder. Replacement regulators and hoses need to be specified by the manufacturer of this appliance.
- Place the dust cap on the cylinder valve outlet whenever the cylinder is not in use. Only install the type of dust cap on the cylinder valve outlet that is provided with the cylinder. Other types of caps or plugs may result in a propane leak.

CONNECTION PROCEDURES

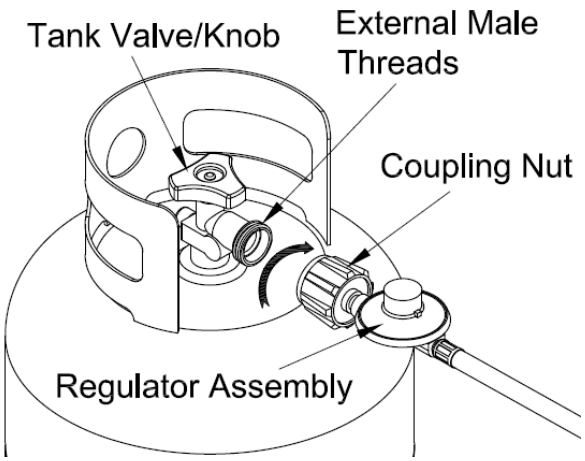

1. Make sure the tank valve is closed (turn valve clockwise until tight).
2. Check the tank valve to ensure it has the proper external male threads.
3. Make sure all burner valves are turned OFF.
4. Check valve connections, port, and regulator assembly for any damage or debris. Remove any debris. Inspect the hose for damage. Never attempt to use damaged or obstructed equipment. Contact your local LP gas dealer for repair.
5. When connecting the regulator assembly to the valve, hand-tighten the quick coupling nut clockwise until tight. Do not use a wrench to tighten. Use of a wrench may damage the quick coupling nut.
6. Open the tank valve fully (counterclockwise). Use a soapy water solution to check all connections for leaks (leak test) before attempting to light the grill (see P.30-31). If a leak is found, turn the tank valve off and do not use the grill until your LP gas dealer can make repairs.

TO DISCONNECT LP CYLINDER:

1. Turn the burner valves off.
2. Turn the tank valve off fully (turn clockwise).
3. Detach the regulator assembly from the tank valve by turning the quick coupling nut counterclockwise.

FLAME CHARACTERISTICS

Burner flames should be blue and stable with little yellow tips and no excessive noise or lifting. If the flame is yellow, it indicates insufficient air. If the flame is noisy and tends to lift away from the burner, it indicates too much air. If any of these conditions exist, call our customer service line. Visually check the burner flames prior to each use.

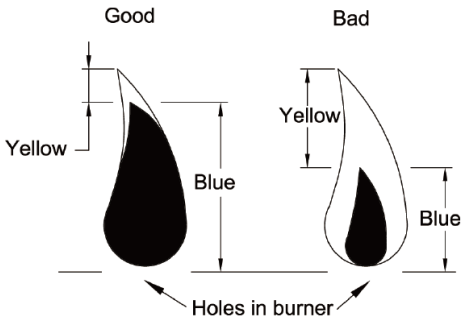

Package Contents

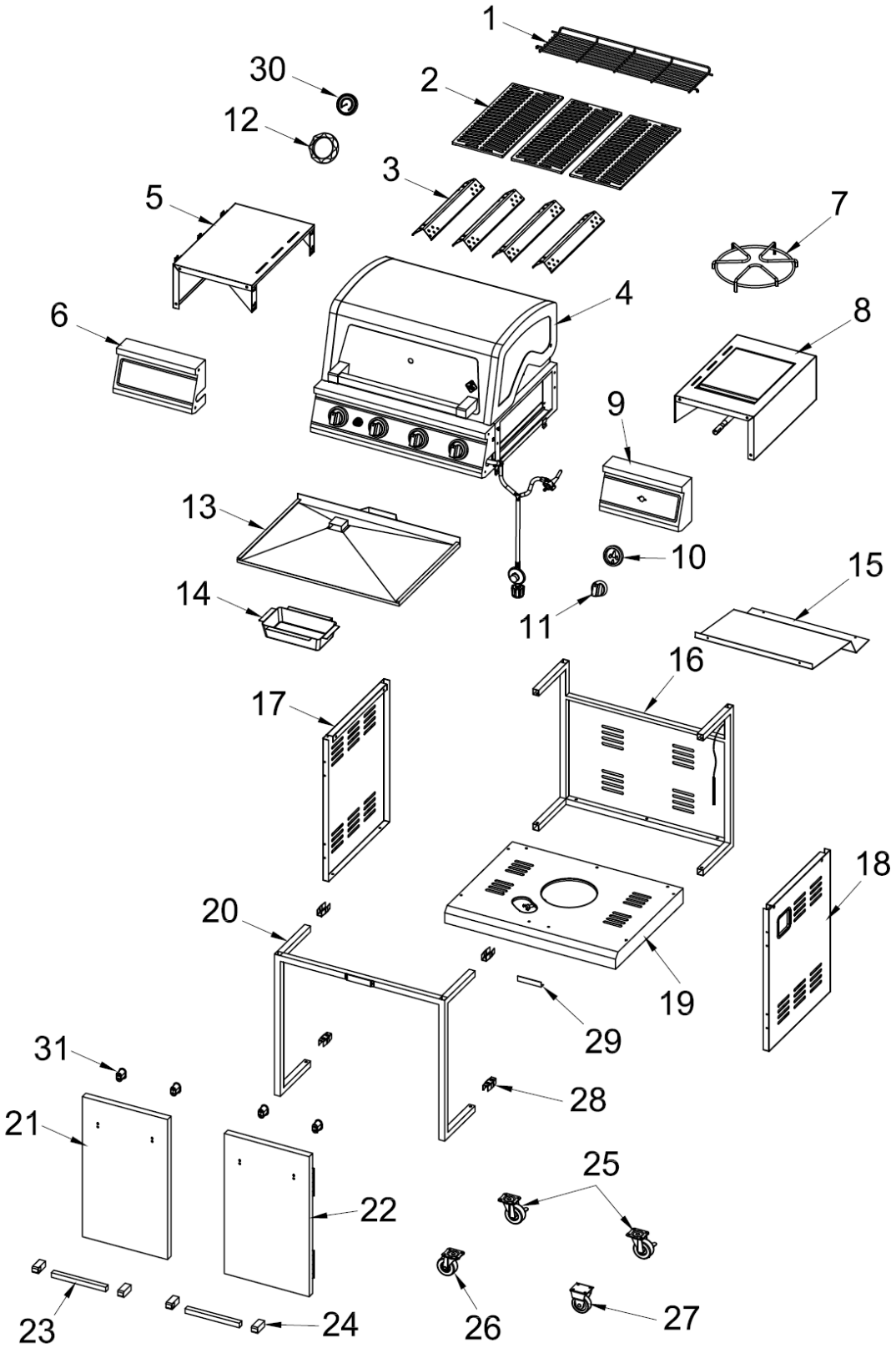

Component	Description	Quantity		Component	Description	Quantity
1	Warming Rack	1		17	Left Cart Panel	1
2	Cooking Grate	3		18	Right Cart Panel	1
3	Flame Tamer	4		19	Cart Base Assembly	1
4	Grill Body Assembly	1		20	Front Cart	1
5	Left Side Table	1		21	Left Door	1
6	Left Side Table Panel	1		22	Right Door	1
7	Side Burner Grate	1		23	Door Handle	2
8	Side Burner Frame Assembly	1		24	Door Handle Bezel	4
9	Side Burner Control Panel	1		25	Locking Caster	2
10	Control Knob Bezel	1		26	Unlocked Caster	1
11	Control Knob	1		27	Directional Caster	1
12	Thermometer Bezel	1		28	Cart Frame Connecting Tube	4
13	Grease Collecting Tray	1		29	Door Stopping Bracket	1
14	Grease Cup	1		30	Thermometer	1
15	Tank Heat Shield	1		31	Plastic Insert	4
16	Rear cart	1				

Product Information

Product Dimensions – **55.51” x 25.05” x 48.96” (141.0cm x 63.6cm x 124.4cm)**
Product Weight Capacity – **Supports up to 124 lbs. (56.4 kg.)**

Components

Component 1 Warming Rack Part No. MET-4B0104 Qty 1	Component 2 Cooking Grate Part No. MET-4B0105 Qty 3	Component 3 Flame Tamer Part No. MET-4B0106 Qty 4
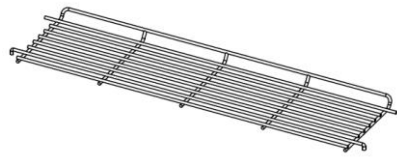		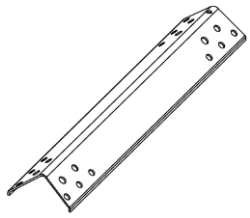
Component 4a Grill Body - Lid Part No. MET-4B0107 Qty 1	Component 4b Grill Body – Left Lid Handle Bezel Part No. MET-4B0108 Qty 1	Component 4c Grill Body – Lid Handle Part No. MET-4B0109 Qty 1
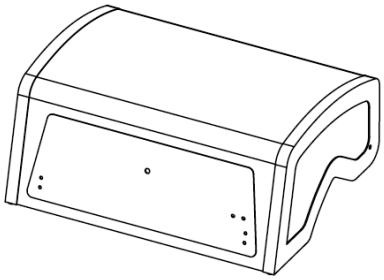	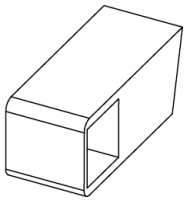	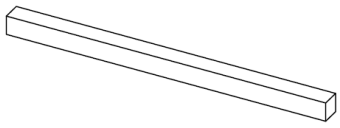
Component 4d Grill Body – Lid Support Bracket Part No. MET-4B0110 Qty 2	Component 4e Grill Body – Fire Box Part No. MET-4B0111 Qty 1	Component 4f Grill Body – Lid Hinge Pin Part No. MET-4B0112 Qty 2
	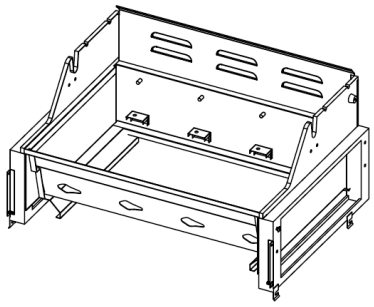	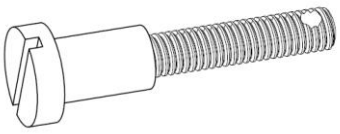
Component 4g Grill Body – Burner Fixing Pin Part No. HAR-5B0001 Qty 4	Component 4h Grill Body – Burner Cotter Pin Part No. HAR-5B0002 Qty 4	Component 4i Grill Body – Burner Part No. GAS-5B0003 Qty 4
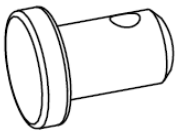	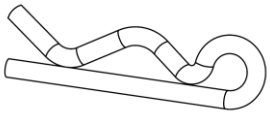	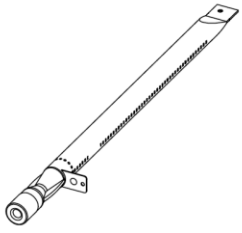

Component 4j Grill Body – Ignition Electrode & Wire A Part No. ELE-5B0002 Qty 2	Component 4k Grill Body – Ignition Electrode & Wire B Part No. ELE-5B0003 Qty 1	Component 4l Grill Body – Ignition Electrode & Wire C Part No. ELE-5B0004 Qty 1
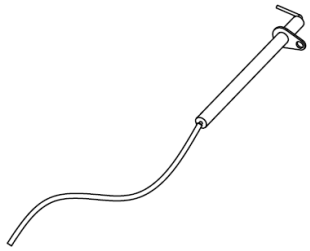	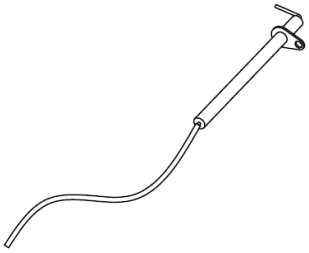	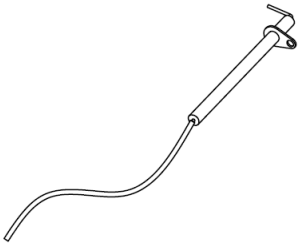
Component 4m Grill Body – Logo Plate Part No. MET-4B0116 Qty 1	Component 4n Grill Body – Firebox Front Heat Shield Part No. MET-4B0114 Qty 1	Component 4o Grill Body – Valve & Manifold Assembly Part No. GAS-4B0014 Qty 1
	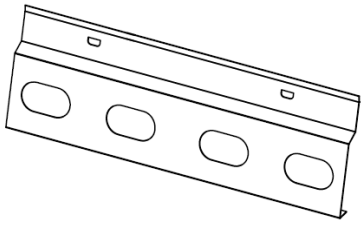	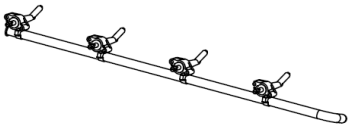
Component 4p Grill Body – Igniter Part No. ELE-5B0006 Qty 1	Component 4q Grill Body – Hose & Regulator Assembly Part No. GAS-4B0015 Qty 1	Component 4r Grill Body – Control Panel Part No. MET-4B0115 Qty 1
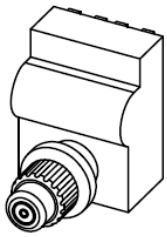		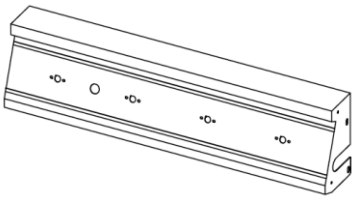
Component 4s Grill Body – Lid Hinge Cotter Pin Part No. HAR-4B0009 Qty 2	Component 4t Grill Body – Right Lid Handle Bezel Part No. MET-4B0139 Qty 1	Component 5a Side Table Part No. MET-4B0117 Qty 1
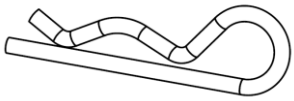	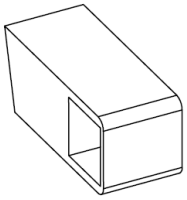	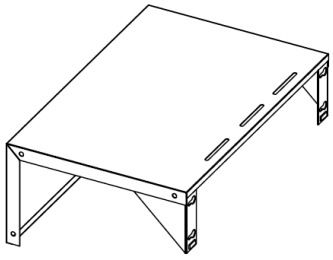

Component 5b Plastic Hook Part No. PLA-4B0007 Qty 3	Component 6 Side Table Panel Part No. MET-4B0118 Qty 1	Component 7 Side Burner Grate Part No. MET-6B0017 Qty 1
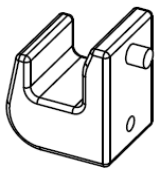	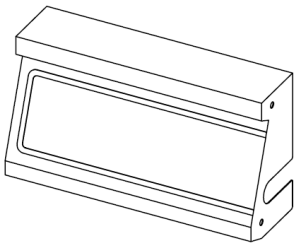	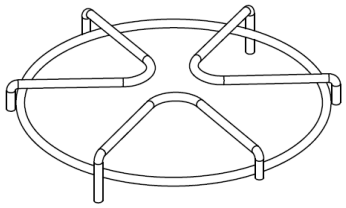
Component 8a Side Burner – Side Burner Lid Part No. MET-4B0119 Qty 1	Component 8b Side Burner – Ignition Electrode Part No. ELE-5B0007 Qty 1	Component 8c Side Burner – Side Burner Part No. GAS-4B0016 Qty 1
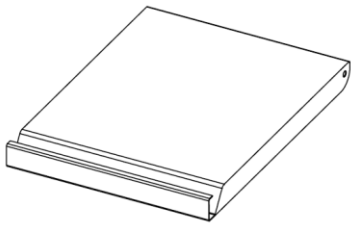	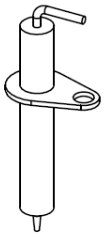	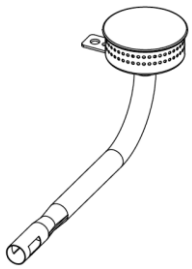
Component 8d Side Burner – Ignition Wire Part No. ELE-4B0008 Qty 1	Component 8e Side Burner – Side Burner Frame Part No. MET-4B0120 Qty 1	Component 8f Side Burner – Side Burner Holder Part No. MET-4B0121 Qty 1
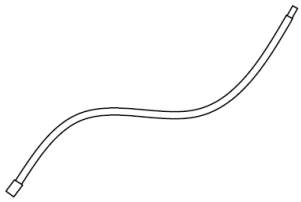	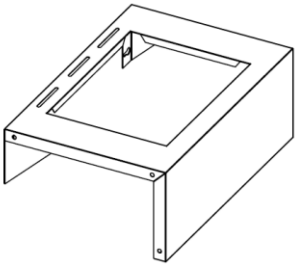	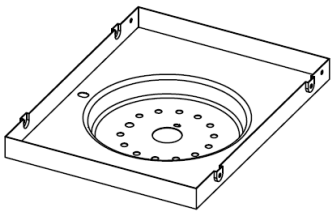
Component 9 Side Burner – Side Burner Control Panel Part No. MET-4B0122 Qty 1	Component 10 Control Knob Bezel Part No. PLA-4B0008 Qty 5	Component 11 Control Knob Part No. PLA-4B0009 Qty 5
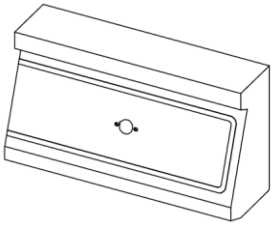	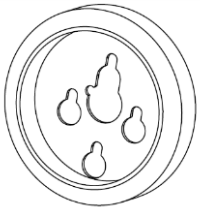	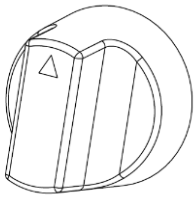

Component 12 Thermometer Bezel Part No. MET-4B0123 Qty 1	Component 13 Grease Collecting Tray Part No. MET-4B0124 Qty 1	Component 14 Grease Cup Part No. MET-4B0125 Qty 1
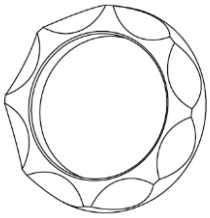	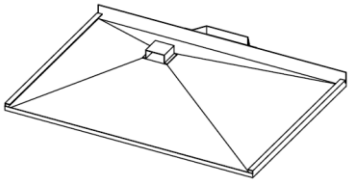	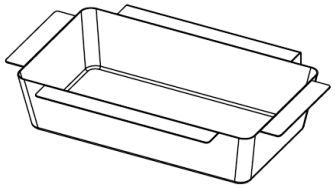
Component 15 Tank Heat Shield Part No. MET-4B0126 Qty 1	Component 16a Rear Cart Frame Part No. MET-4B0127 Qty 1	Component 16b Match Holder Part No. MET-4B0128 Qty 1
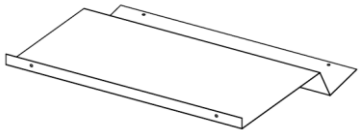	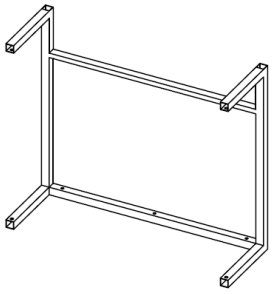	
Component 16c Rear Cart Panel Part No. MET-4B0129 Qty 1	Component 17 Left Cart Panel Part No. MET-4B0130 Qty 1	Component 18a Right Cart Panel Part No. MET-4B0131 Qty 1
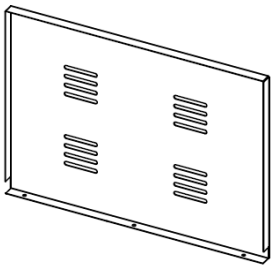	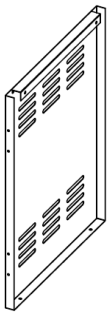	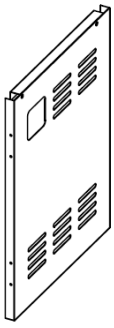
Component 18b Plastic Ring Part No. PLA-5B0005 Qty 1	Component 19a Cart Base Part No. MET-4B0132 Qty 1	Component 19b Tank Fixing Bolt Part No. HAR-5B0003 Qty 1
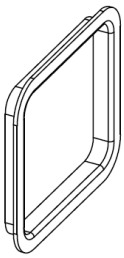	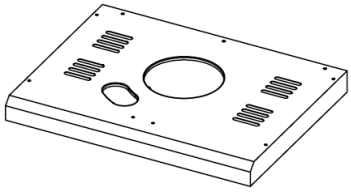	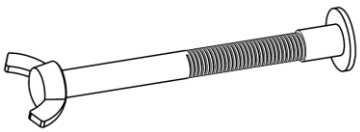

Component 20 Front Cart Frame Part No. MET-4B0133 Qty 1	Component 21 Left Door Part No. MET-4B0134 Qty 1	Component 22 Right Door Part No. MET-4B0135 Qty 1
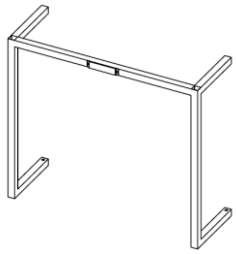		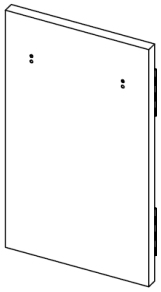
Component 23 Door Handle Part No. MET-4B0136 Qty 2	Component 24 Door Handle Bezel Part No. MET-4B0137 Qty 4	Component 25 Locking Caster Part No. HAR-4B0006 Qty 2
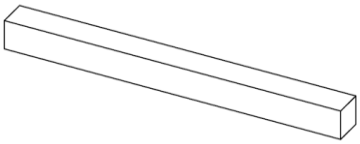	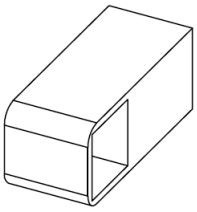	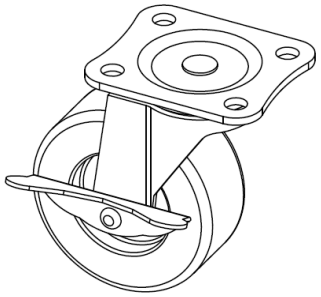
Component 26 Unlocking Caster Part No. HAR-4B0007 Qty 1	Component 27 Directional Caster Part No. HAR-4B0008 Qty 1	Component 28 Cart Frame Connecting Tube Part No. MET-5B0061 Qty 4
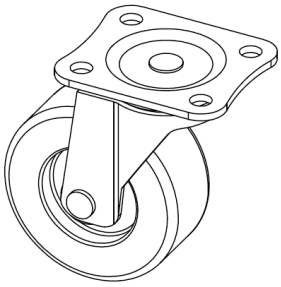	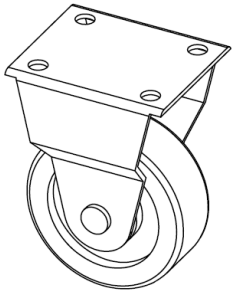	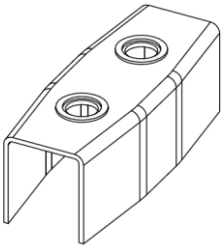
Component 29 Door Stopping Bracket Part No. MET-4B0138 Qty 1	Component 30 Thermometer Part No. THE-4B0002 Qty 1	Component 31 Plastic Insert Part No. PLA-4B0010 Qty 4
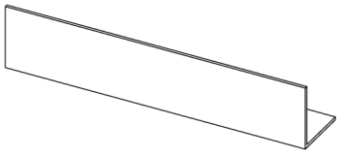	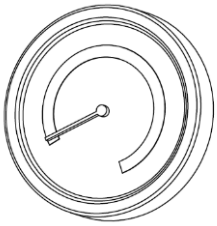	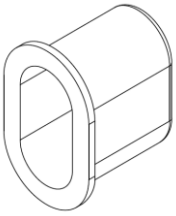

Hardware

Phillips Head Bolt, M4x10mm, Item No. B Qty: 6 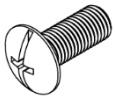	Phillips Head Bolt, M6x12mm, Item No. C Qty: 50 (8pcs pre-attached on the related components) 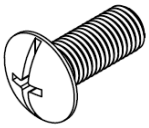	Phillips Head Bolt, M6x10mm, Item No. D Qty: 8 
Phillips Head Bolt, M4x10mm (Silver), Item No. E Qty: 8 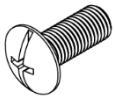	Phillips Head Bolt, M6x35mm, Item No. F Qty: 7 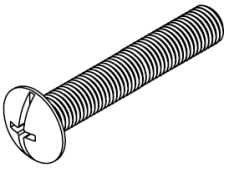	LR6/AA Battery, Item No. G Qty: 1 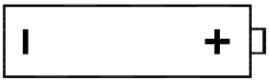
Phillips Head Bolt, M4x8mm, Item No. H Qty: 2 (pre-attached on the related components) 	Thermometer Washer, Item No. I Qty: 1 (pre-attached on the related components) 	Thermometer Nut, Item No. J Qty: 1 (pre-attached on the related components) 

Tools

Phillips Head Screwdriver (Included), Item No. A	Adjustable Wrench (Not included)	
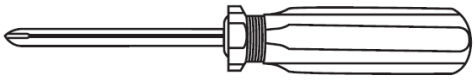	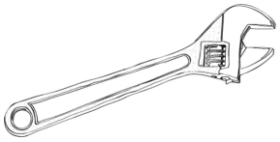	

Need Assistance? Visit us at: samsclub.com/membersmarkhelp

Step 1 – Step 23 (Two person for assembly is recommended)

Step 1. Connect the **Front Cart Frame (20)** and **Rear Cart Frame (16a)** with 4 pcs **Cart Frame Connecting Tube (28)** then secure them with 8 pcs **M6x12 Bolts (C)**. Do not fully tighten the bolts.

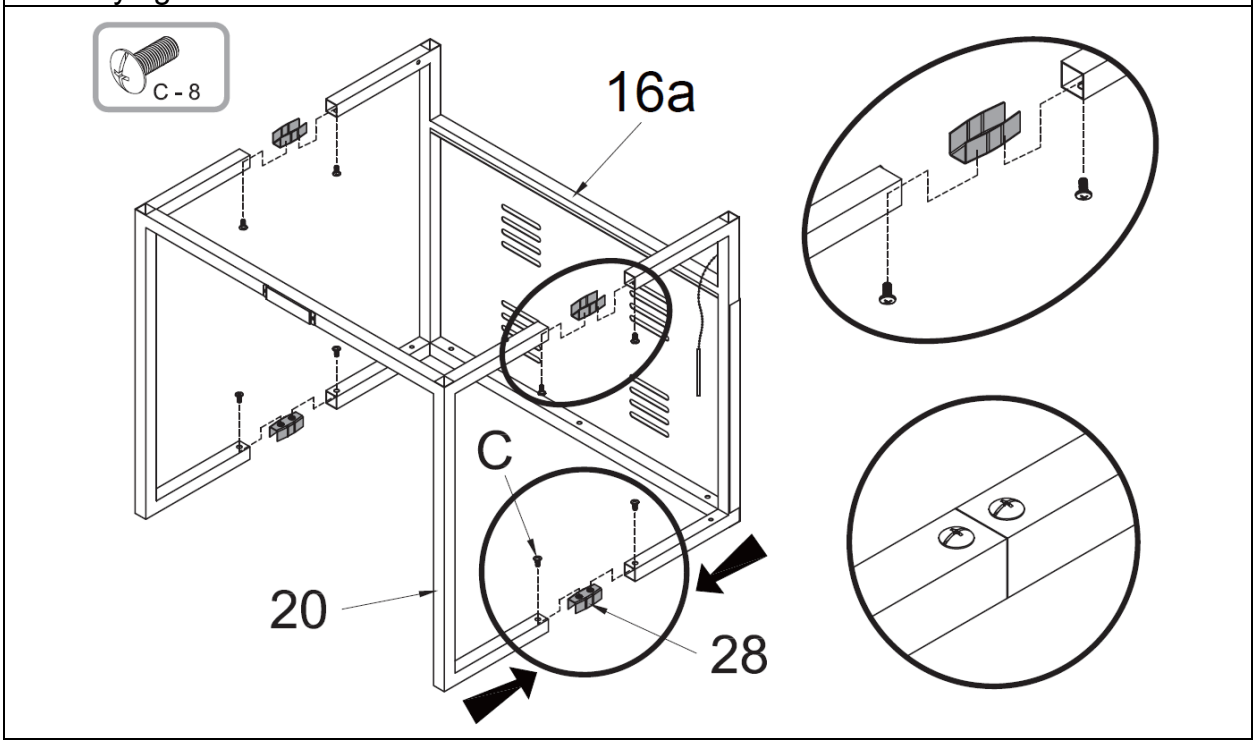

Step 2. Attach the **Left Cart Panel (17)** and **Right Cart Panel (18a)** to the cart assembly using 4 pcs **M6x12 Bolts (C)**. Do not fully tighten the bolts.

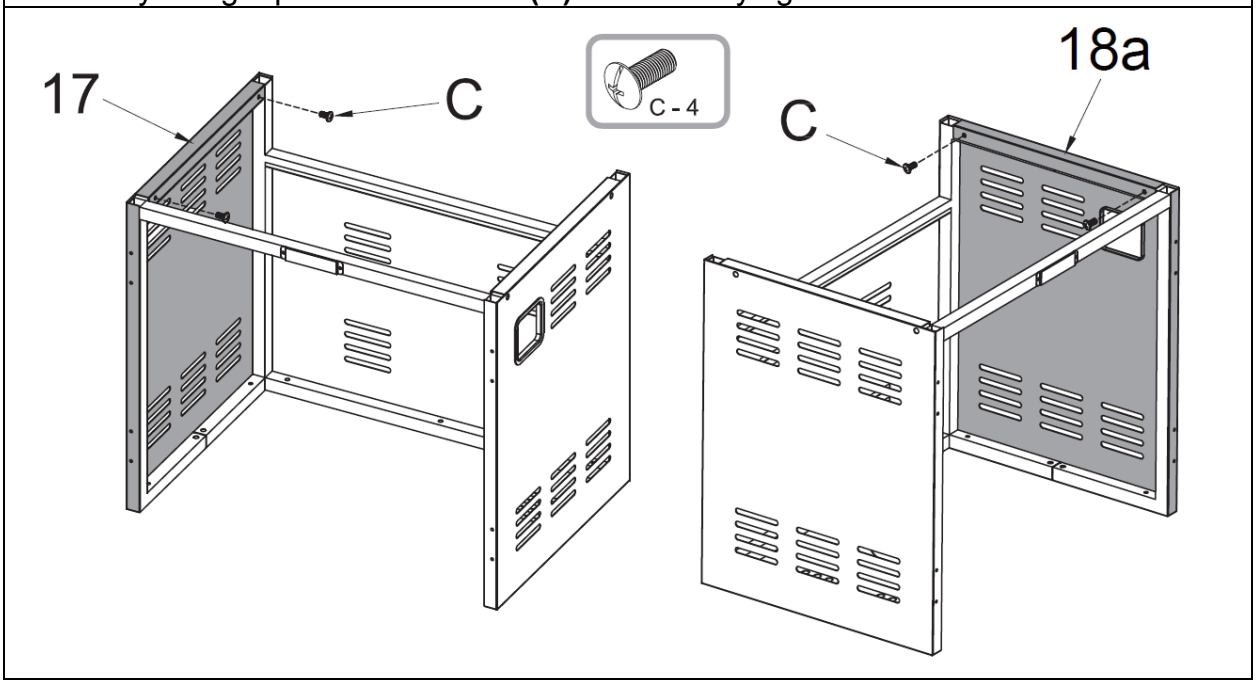

Step 3. Attach the **Cart Base Assembly (19a)** to the cart assembly using 7 pcs **M6x35 Bolts (F)**.

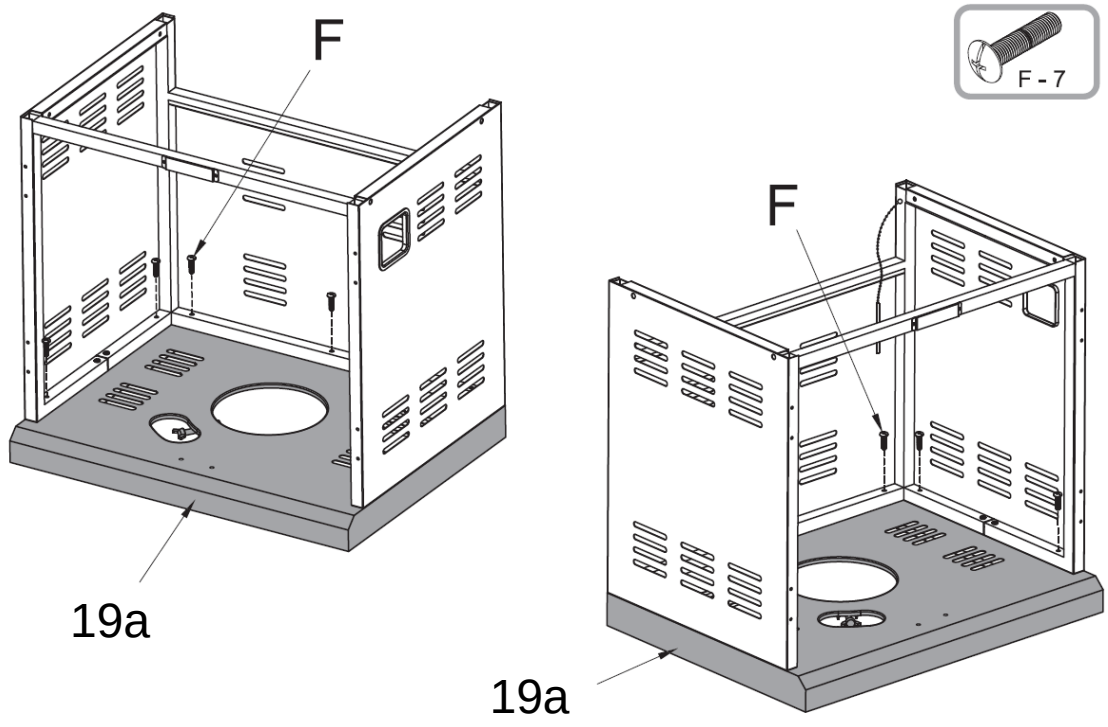

Step 4. Attach the **Door Stopping Bracket (29)** to the cart base assembly using 2 pcs **M4x10 bolts Black (B)**.

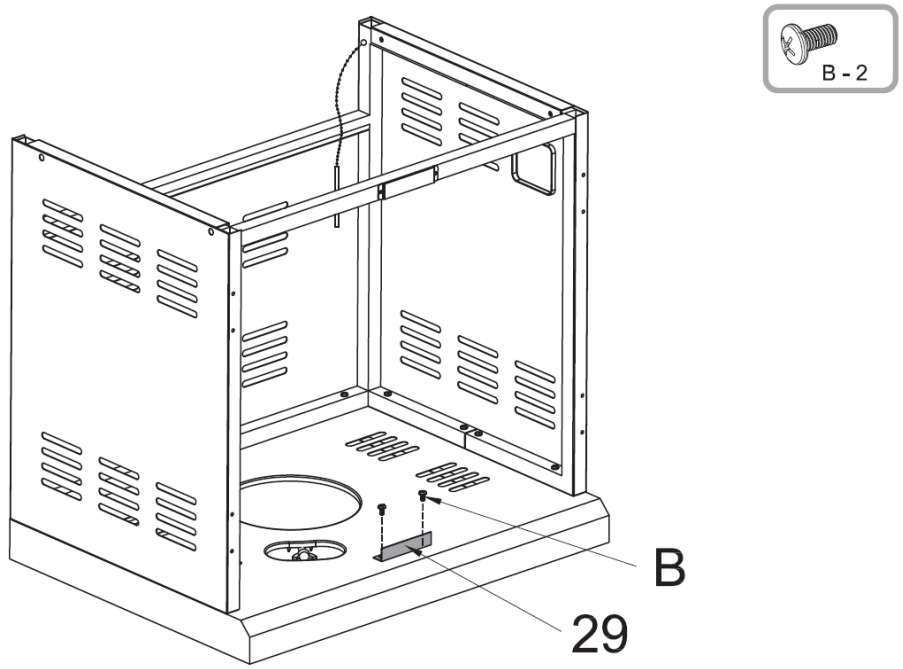

Step 5. Attach the **Casters (25, 26 & 27)** to cart assembly using 16 pcs **M6x12 Bolts (C)** as shown below.

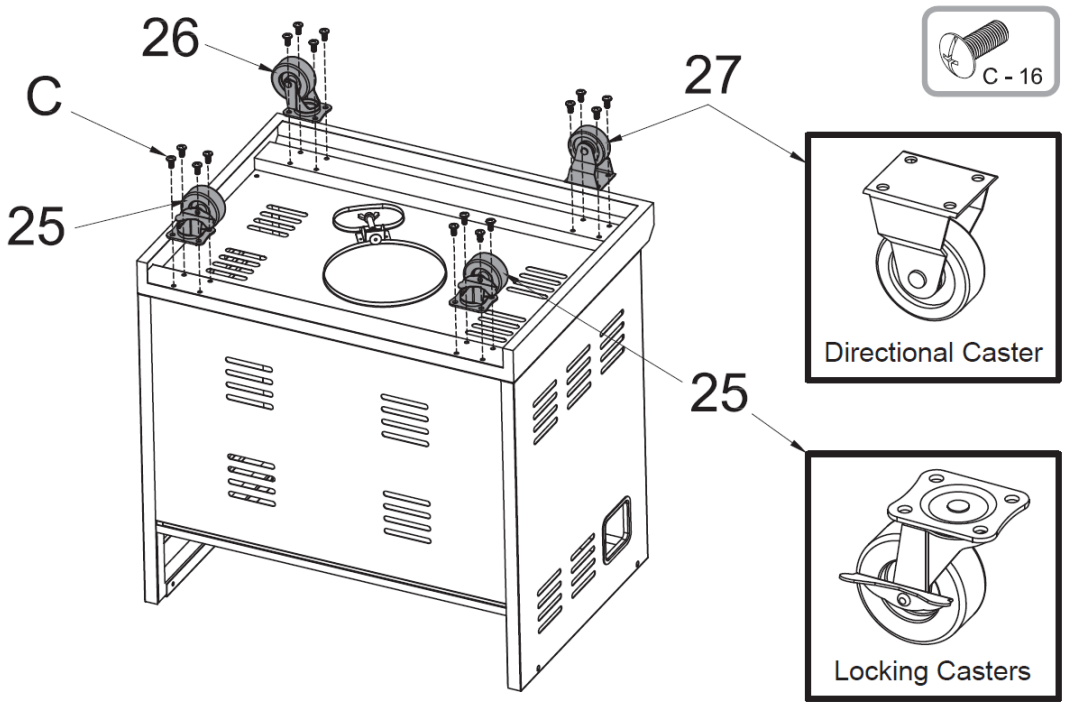

Step 6. Fully tighten all the bolts on the cart. Lock all 2 locking casters to prevent the unit moving.

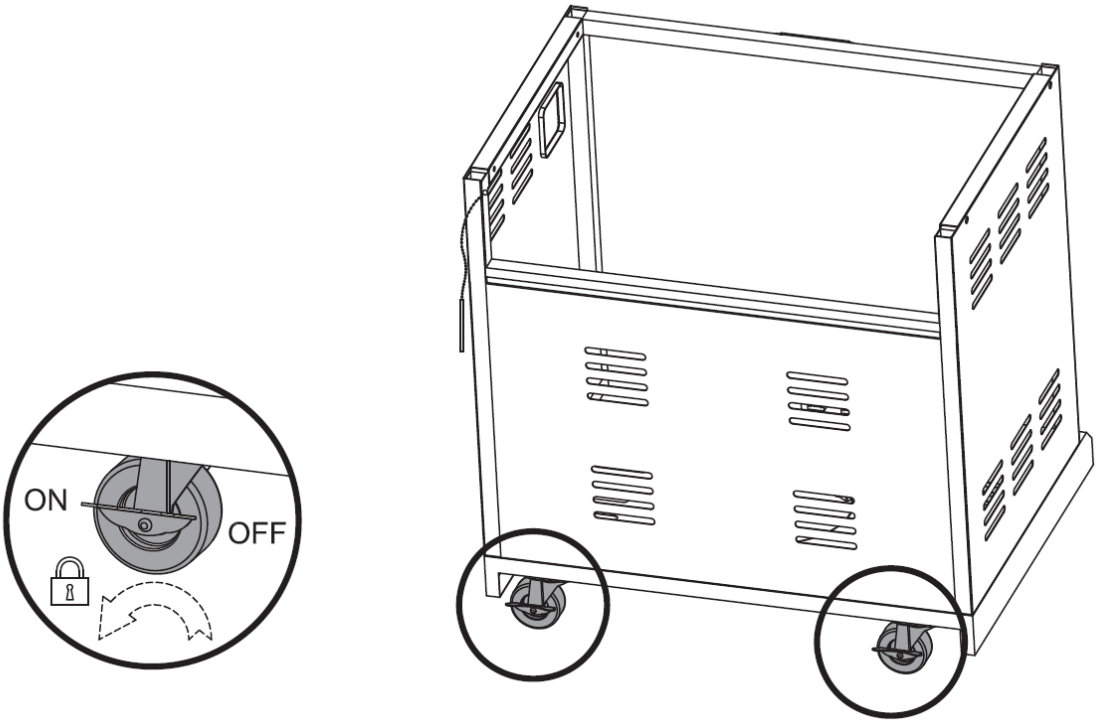

Step 7. Attach the **Door Handles (23)** and **Door Handle Bezels (24)** to the **Right and Left Doors (21 &22)** with the **Plastic Inserts (31)** using 8 pcs **M6x10 Bolts (D)**.

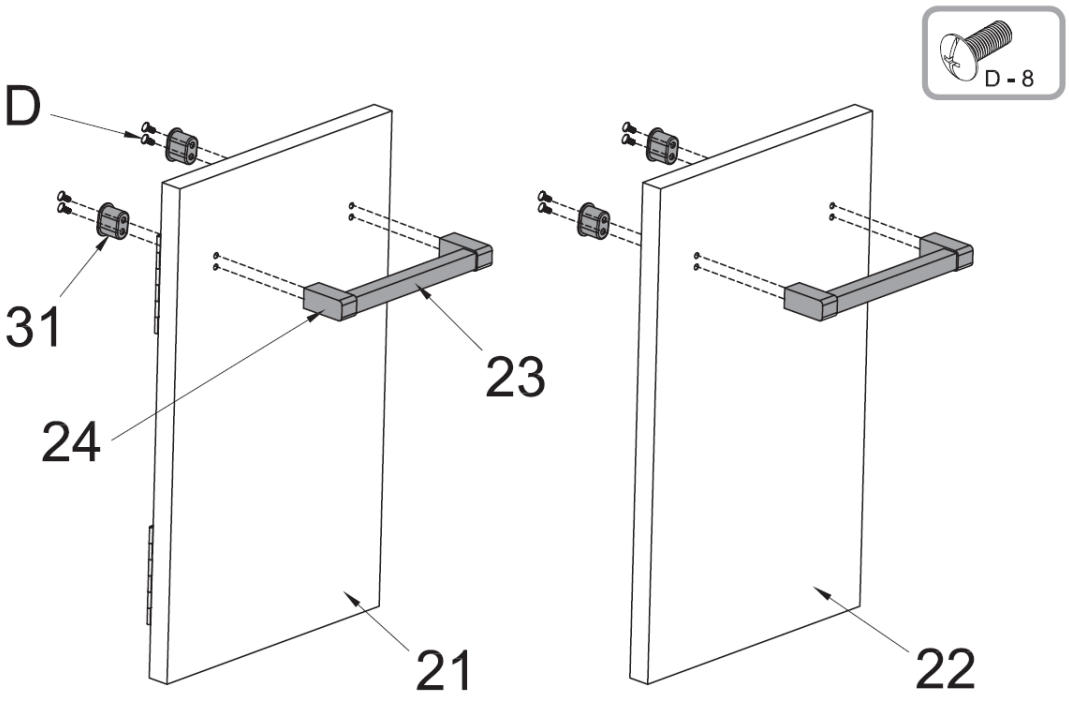

Step 8. Attach the doors to the cart assembly using 8 pcs **M4x10 bolts Silver (E)**.

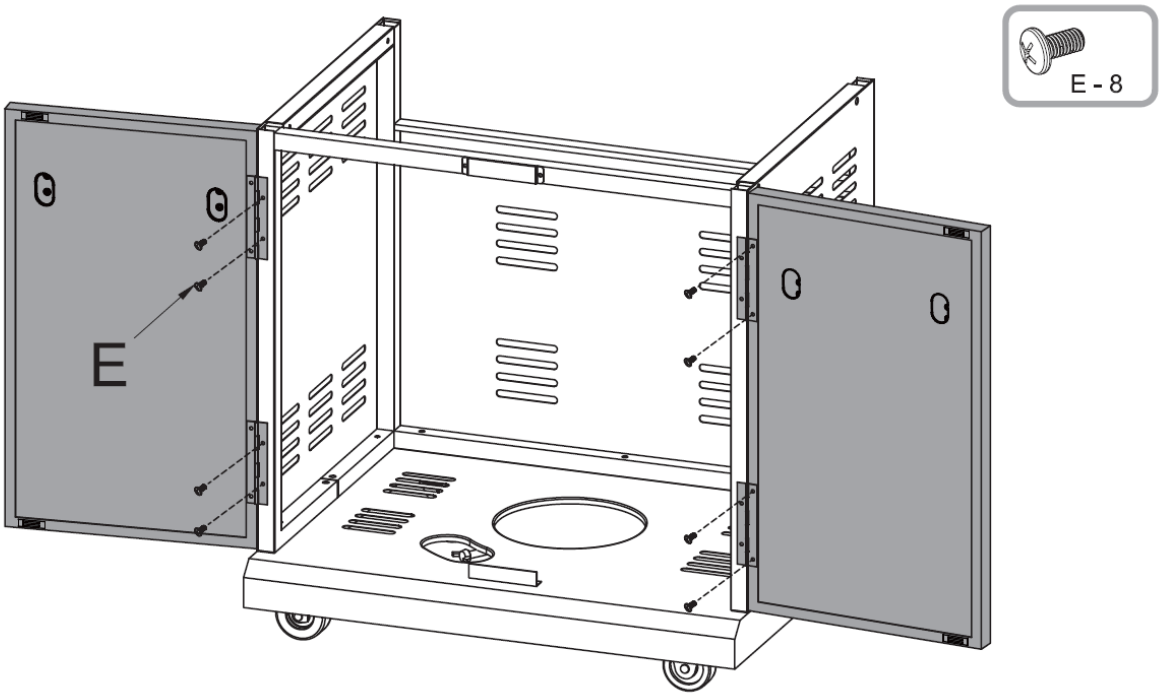

Step 9. Attach the **Tank Heat Shield (15)** to the cart assembly using 4 pcs **M4x10 bolts Black (B)**.

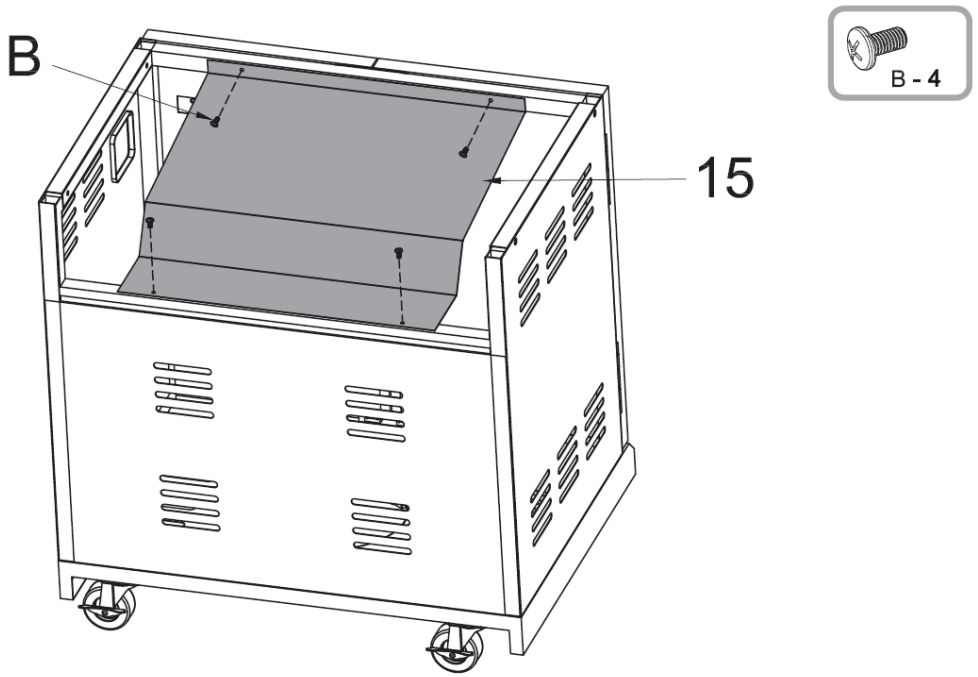

Step 10. This step needs two people to complete! Put the **Grill Body Assembly (4)** carefully on top of the cart assembly. Secure the part in place with 4 pcs of **M6x12mm bolts (C)** as shown below. Be careful to support the grill body and cart assembly during this step.

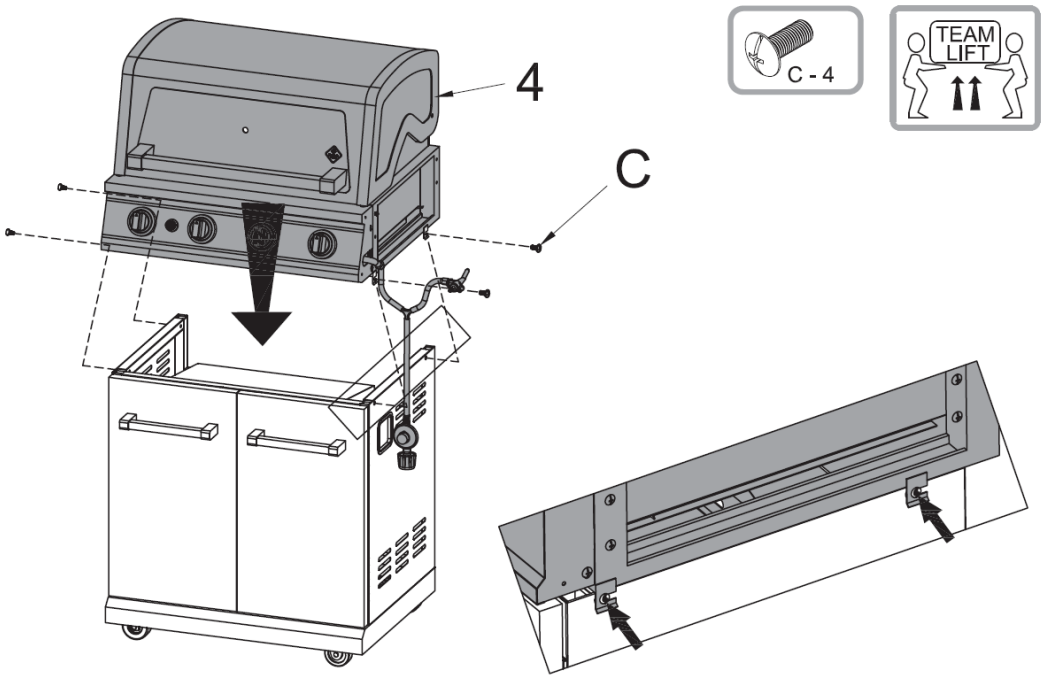

Step 11. Disassemble the **Thermometer Nut (J)** and **Thermometer Washer (I)** from the **Thermometer (30)**. Attach the **Thermometer (30)** and **Thermometer Bezel (12)** to the lid using the removed nut and washer.

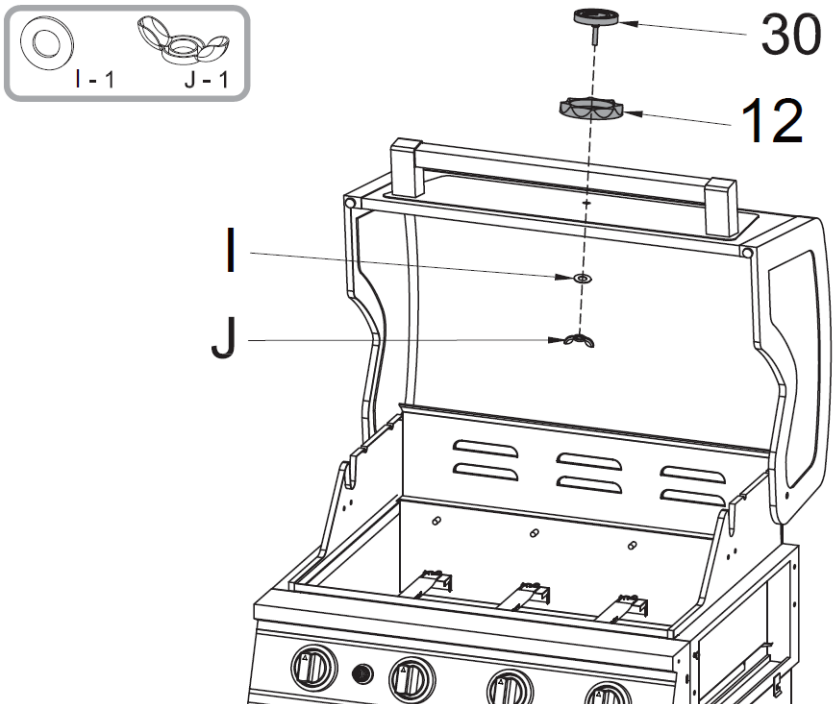

Step 12. Attach the **Left Side Table Panel (6)** to the **Left Side Table (5)** using 3 pcs **M6x12mm bolts (C).**

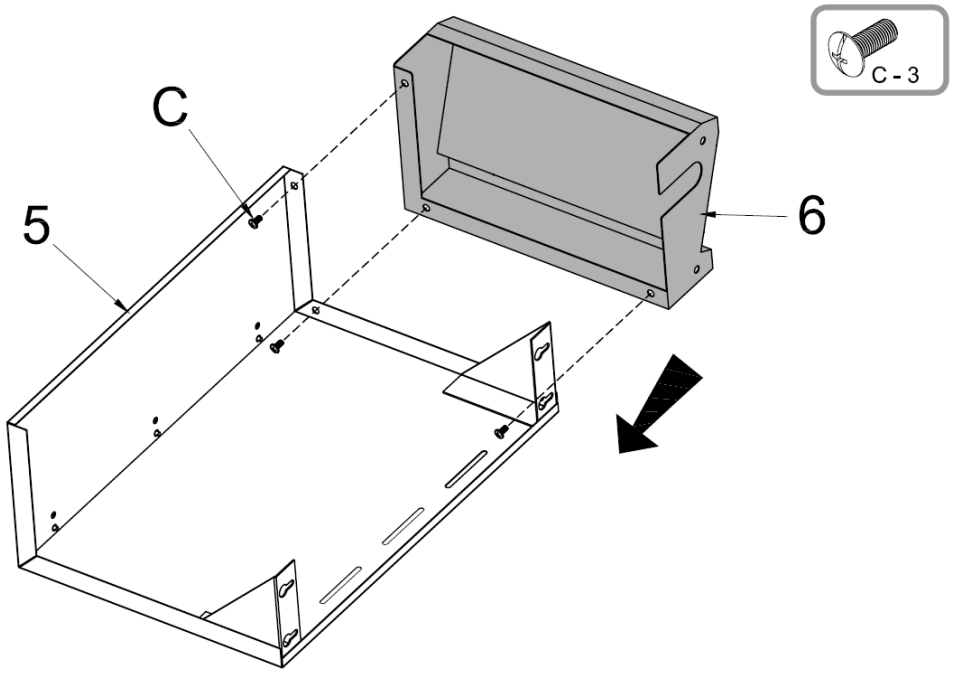

Step 13. Loosen 4 pcs pre-attached bolts **M6x12 bolts (C)** from the left side of the grill body and adjust to 3/16" clearance as shown. Position the holes on the side table assembly through the bolts at grill body. Push the side table assembly leftwards to lock it in place and tighten all bolts. Secure the side table assembly to the control panel of the grill body assembly using 2 pcs **M6x12 bolts (C)**.

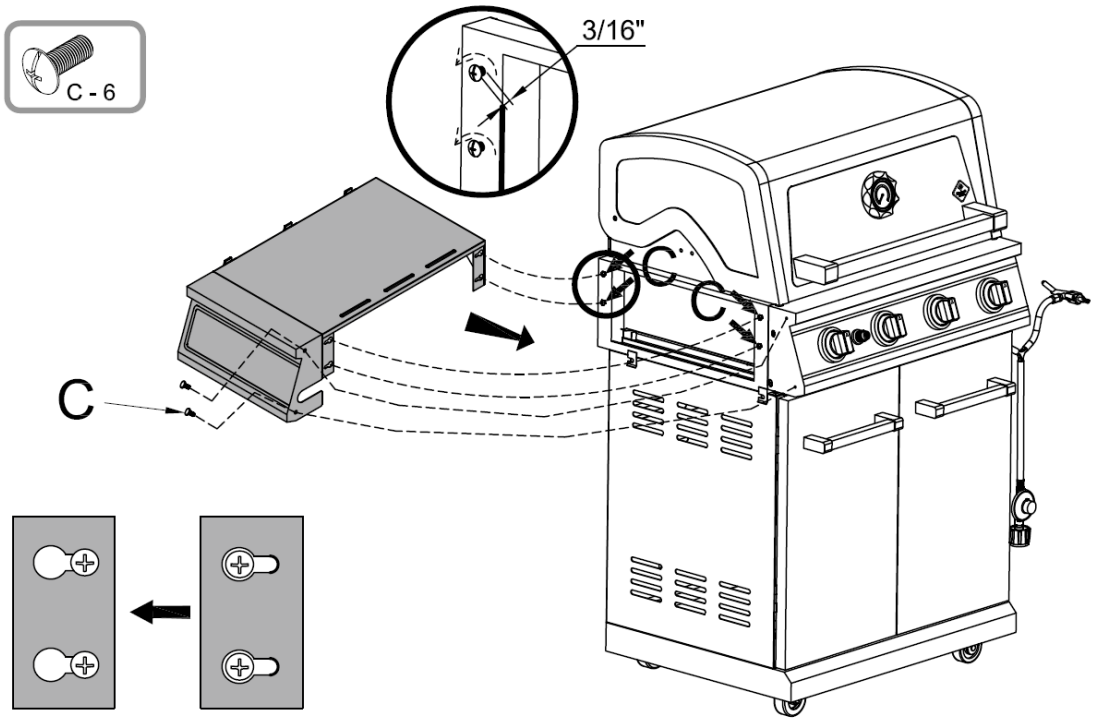

Step 14. Attach the **Side Burner Control Panel (9)** to the **Side Burner Frame Assembly (8)** by using 3 pcs **M6x12mm bolts (C)**.

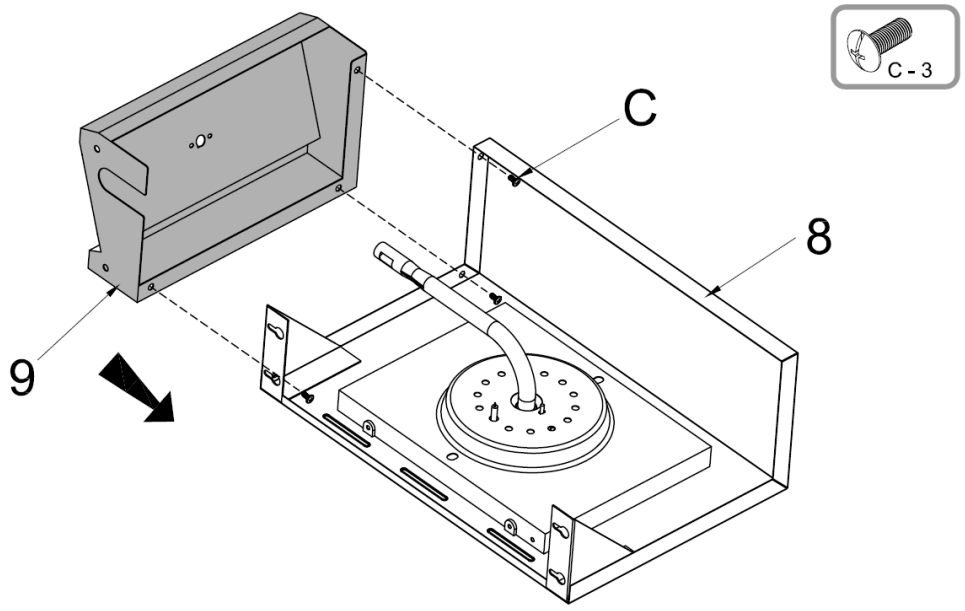

Step 15. Loosen 4 pcs pre-attached bolts **M6x12 bolts (C)** from the right side of the grill body and adjust to 3/16” clearance as shown. Position the holes on the side burner assembly through the bolts at grill body as shown below. Push the side burner assembly rightwards to lock it in place and tighten all bolts.

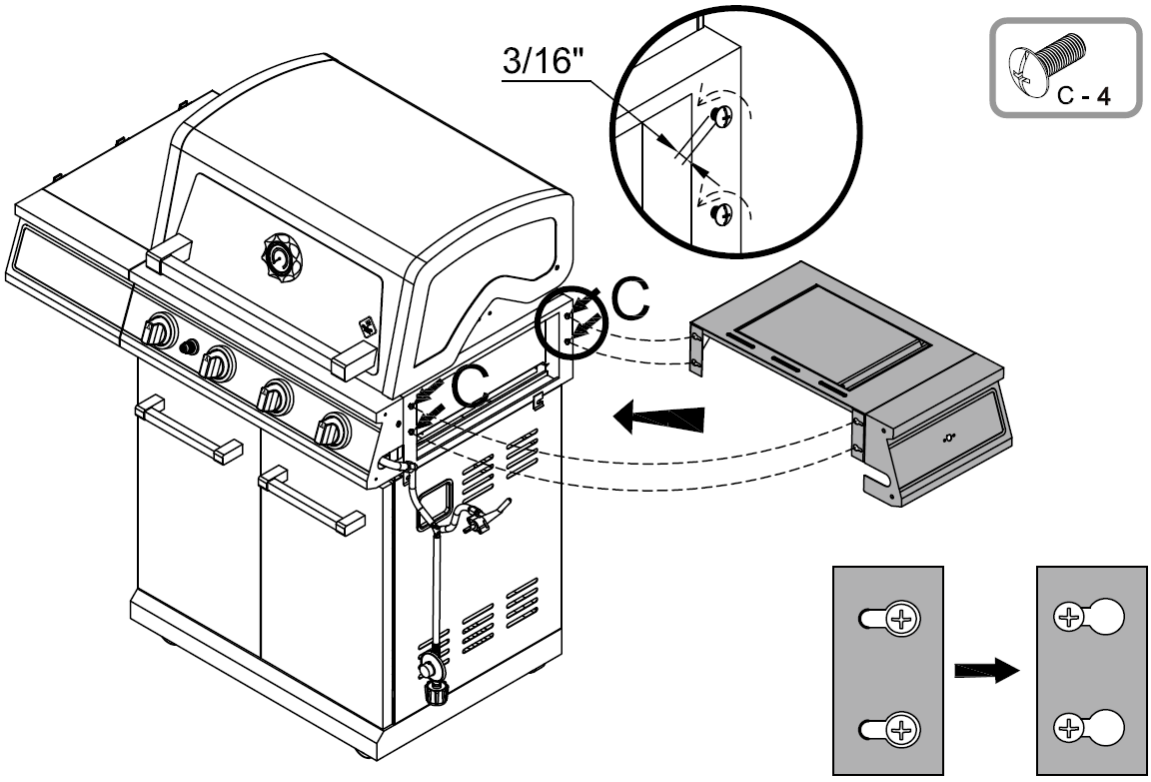

Step 16. Remove the 2 pcs pre-assembled bolts **M4x8mm (H)** from the side burner valve. Pull the side burner panel slightly forward (Step 1) and insert the valve outlet (orifice) into the side burner port (Step 2). Then insert the valve to the hole on **Side Burner Control Panel**. Fix the side burner valve onto the **Control Knob Bezel (10)** using 2 pcs removed bolts **M4x8mm (H)**. Make sure that the valve outlet (orifice) is inserted STRAIGHTLY into the burner port as shown below. Secure the side burner assembly to the control panel of the grill body assembly by using 2 pcs **M6x12mm bolts (C).**

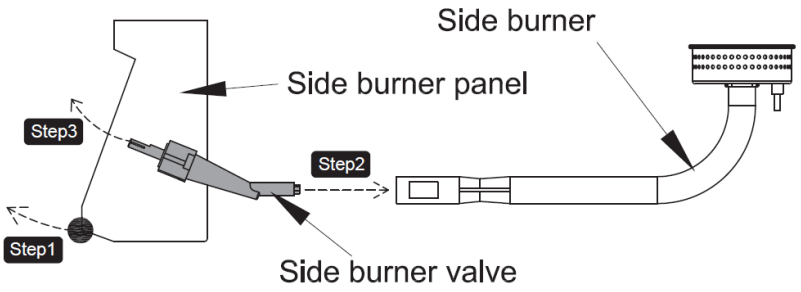

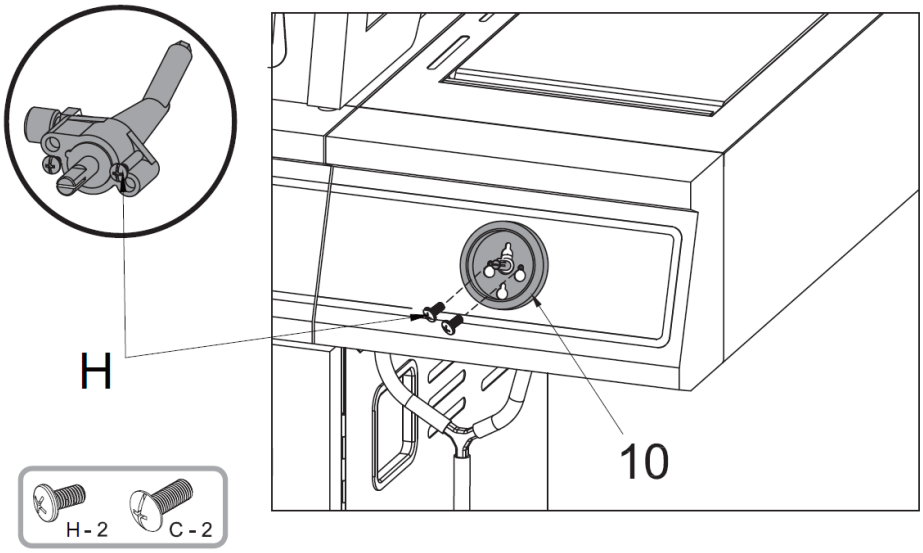

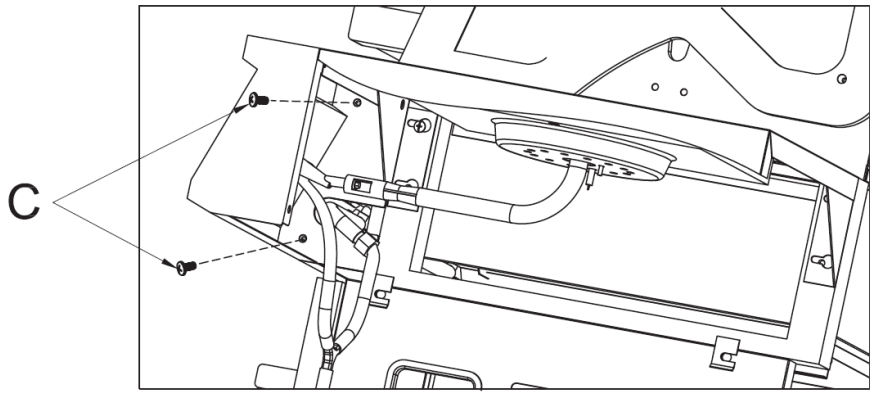

Step 17. Insert the connector of the ignition wire to the terminal of the ignition electrode on the side burner assembly, as shown below.
Insert the **Control Knob (11)** to the pin on the side burner valve. Apply light pressure to secure the knob firmly. Make sure that the flat end of the pin is aligned with the D-shaped hole of the control knob (with the triangle pointing upwards).

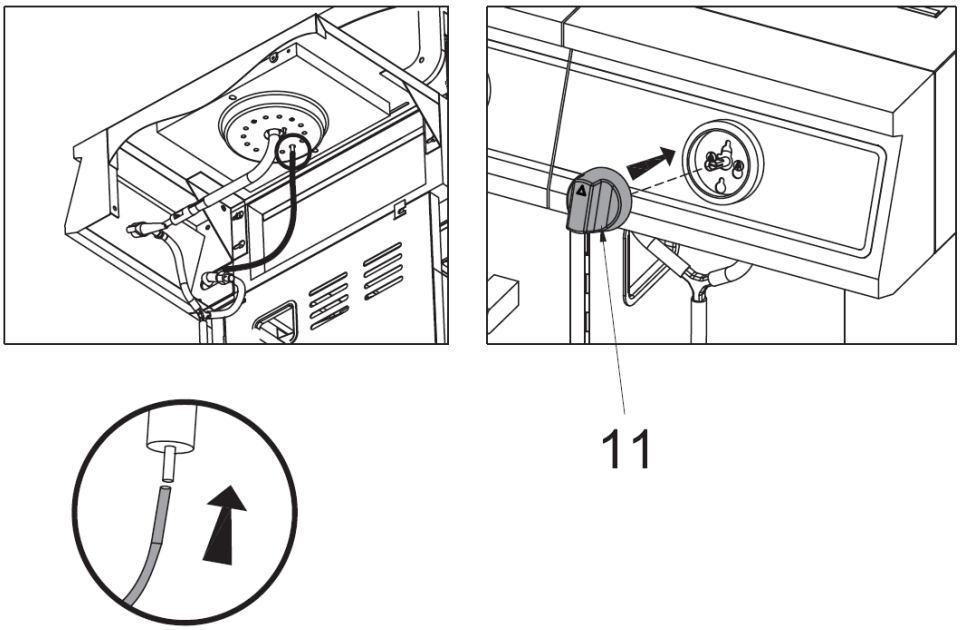

Step 18. Slide the **Grease Collecting Tray (13)** into the holding bracket at the bottom of the grill body. Be sure the handle is facing outward.

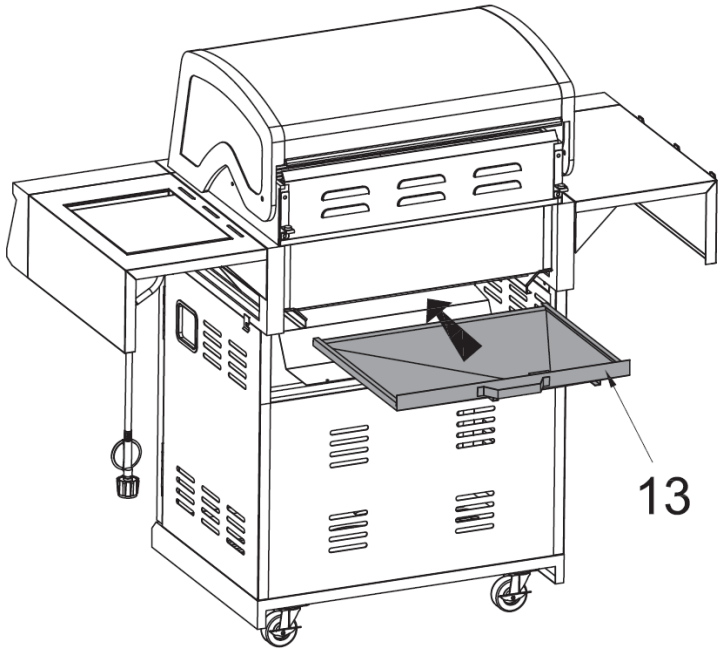

Step 19. Slide the **Grease Cup (14)** into the holding bracket at the bottom of the grease collecting tray. Be sure the handle is facing outward.

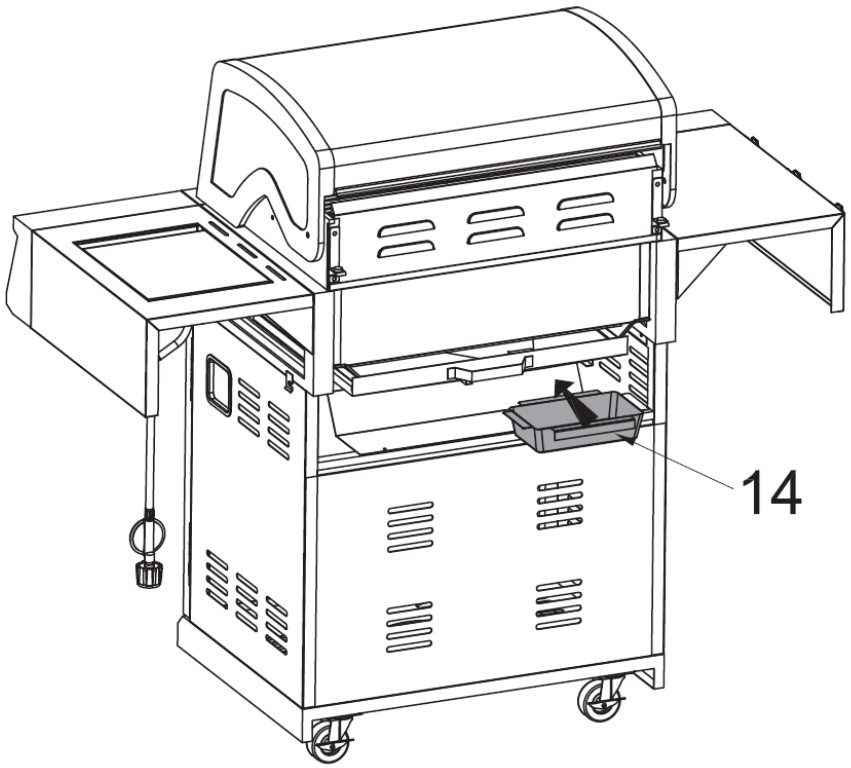

Step 20. Place the **Flame Tamer (3)** as right direction on the grill as shown below.

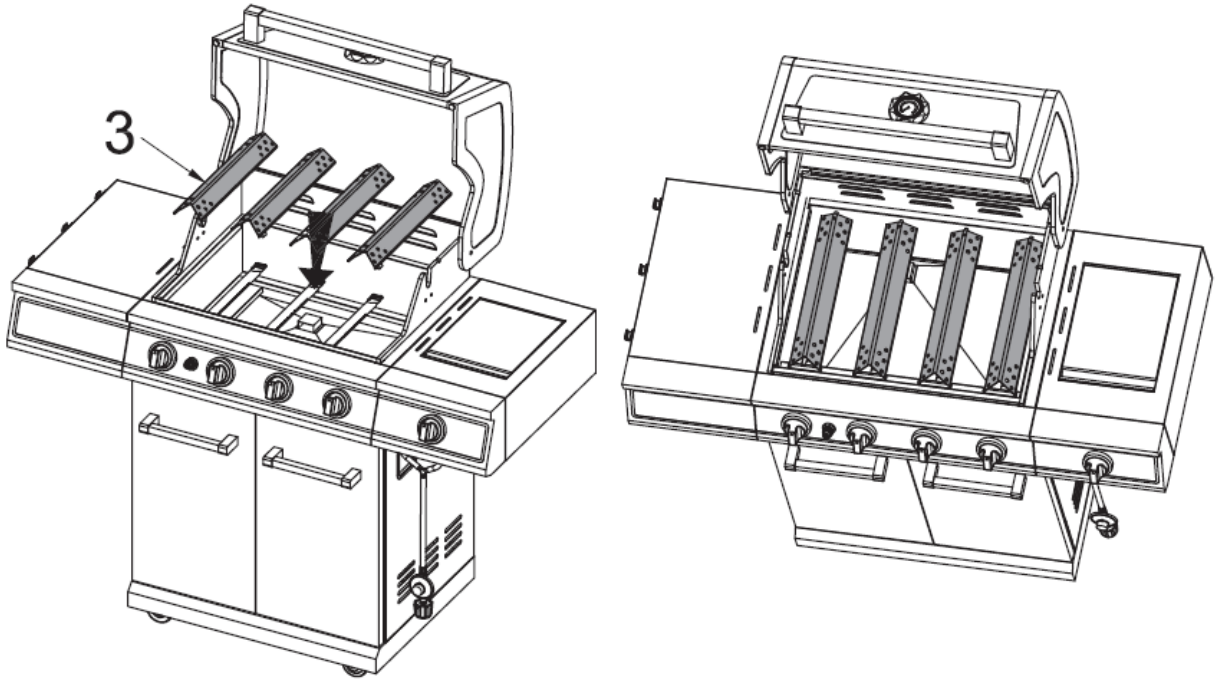

Step 21. Place the **Warming Rack (1)**, **Cooking Grates (2)** and **Side Burner Grate (7)** on the grill as shown.

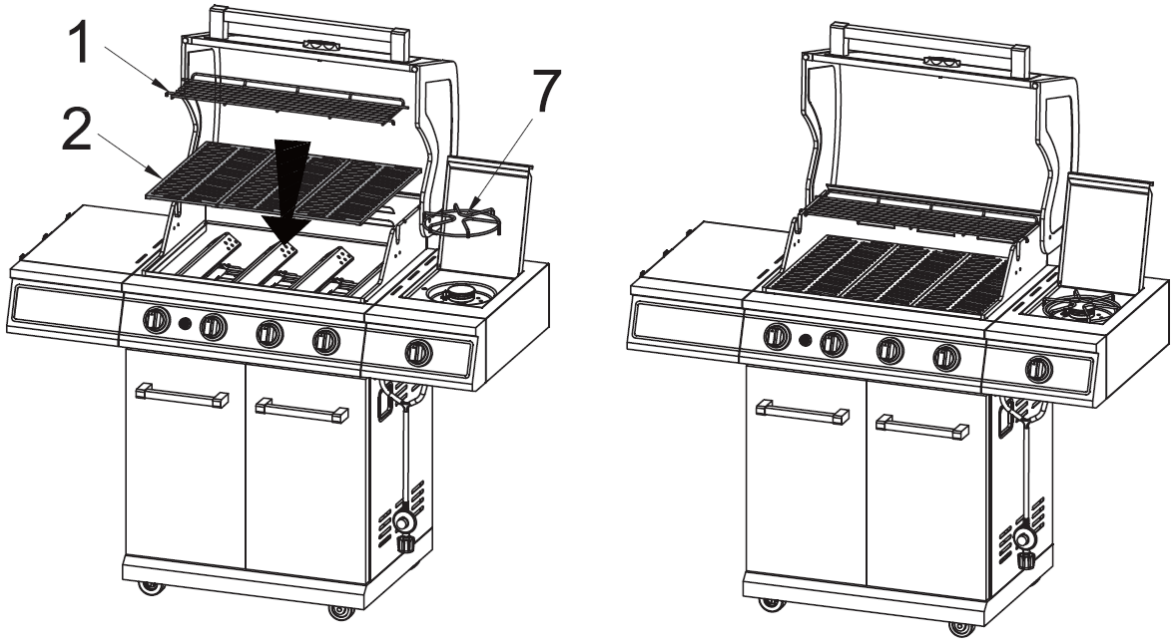

Step 22. Install a **LR6/AA Battery (G)** into the igniter.

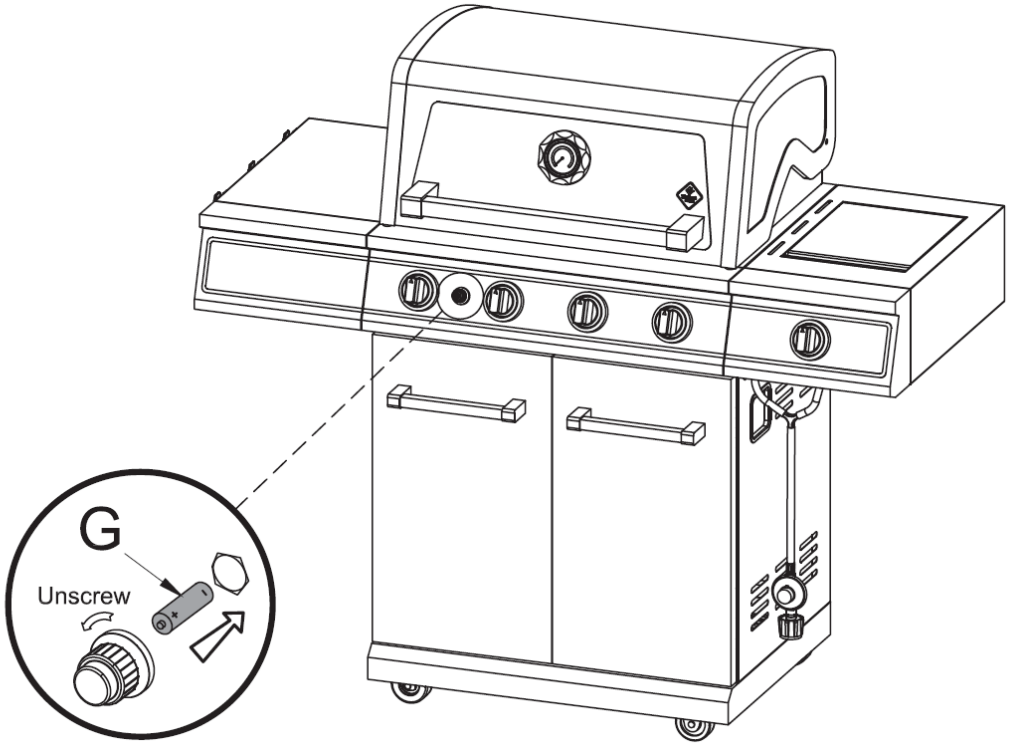

Step 23. Your unit is fully assembled! Make sure to read and follow the Instruction Manual before using this appliance.

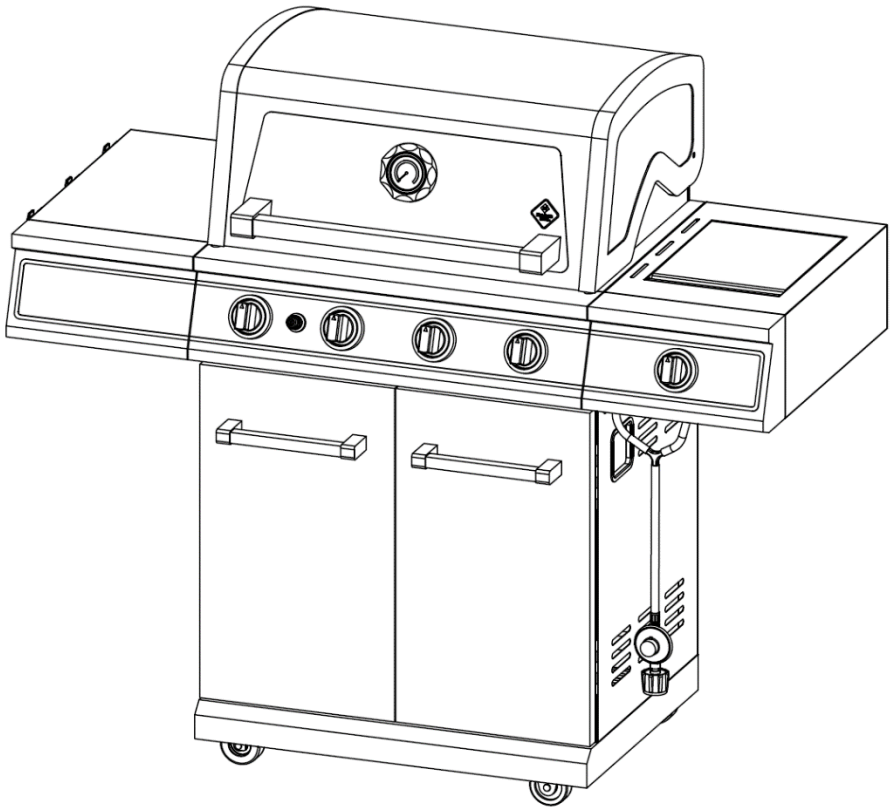

Warning

PROP 65 WARNING

WARNING: This product can expose you to chemicals including benzene, which is known to the State of California to cause cancer and birth defects or other reproductive harm. For more information go to www.P65Warnings.ca.gov.

WARNING

- The appliance is designed for outdoor use only. Do NOT operate in a building, garage, or any other enclosed area.
- This outdoor cooking gas appliance is not intended to be installed in or on boats. This appliance is not intended to be installed in or on recreational vehicles.
- Use your grill OUTDOORS in a well ventilated space away from dwellings or other buildings to prevent dangers associated with gas accumulation and toxic vapors. The grill should be situated at least 60 inches (152.4 cm) from buildings. Not adhering to these clearances will prevent proper ventilation and may increase the risk of a fire and/or property damage, which could also result in personal injury.
- Maintain a minimum clearance of 60 inches (152.4 cm) between all sides of grill, deck railings, walls or other combustible material. DO NOT use grill under any overhead combustible construction.

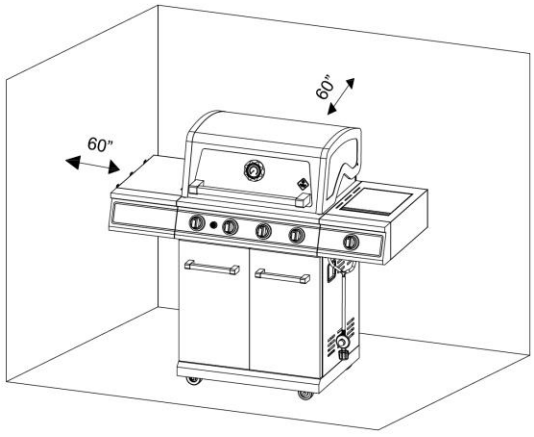

Maintain a minimum clearance of 60 inches from combustible material.

- **DO NOT** obstruct the flow of combustion/ventilation air.
- **DO NOT** leave the grill unattended while in use.
- **DO NOT** use while under the influence of drugs or alcohol.
- Keep the fuel supply hose away from heated surfaces.
- Grill will be hot during and shortly after operation. Allow the grill time to cool before moving/storing. Failure to do so could result in a fire, causing property damage, personal injury, or death.
- The appliance is for household use only. DO NOT use this grill for other than its intended purpose.
- Never use natural gas in a unit designed for liquid propane gas.

- Never use charcoal or wood briquettes in a gas grill. Flavoring chips must be contained in a metal smoking box to contain ash and prevent fires.
- A Leak Test must be conducted prior to each use.
- Keep a fire extinguisher on hand. Refer to your local authority to determine proper size and type.
- Grill is hot when in use. To avoid burns:
  - **DO NOT** attempt to move the grill.
  - Lock the wheels so the unit does not accidentally move.
  - Wear protective gloves or oven mitts.
  - **DO NOT** touch any hot grill surfaces.
  - **DO NOT** wear loose clothing or allow hair to come in contact with grill.
- Side burner lid must be open when side burner is in operation.
- The appliance shall not be used on or under any apartment or condominium balcony or deck
- When cooking with oil or grease, have a type BC or ABC fire extinguisher readily available.
- In the event of an oil or grease fire do not attempt to extinguish with water. Immediately call the fire department. A Type BC or ABC fire extinguisher may, in some circumstances contain the fire.
- When cooking, the appliance fryer or boiler must be on a level, stable noncombustible surface in an area clear of combustible material. An asphalt surface (blacktop) may not be acceptable for this purpose.
- Do not leave the appliance unattended. Keep children and pets away from the appliance at all times.
- Do not move the appliance when in use. Allow the cooking vessel to cool to 115°F (45 °C) before moving or storing.
- This appliance is not intended for and should never be used as a heater.
- Gloves are recommended while assembling the grill.
- Turn off gas supply and the knobs BEFORE cleaning the burners.



WARNING



FOR FILLING THE LP GAS CYLINDER

- Allow only qualified LP gas dealers to properly fill or repair your LP cylinder.
- DO NOT allow the cylinder to be filled beyond 80% capacity. Over-filled tanks can build up pressure and cause the relief valve to expel propane gas vapors.
- Always use a safety cap when the grill is not connected to a cylinder.
- If you exchange a cylinder with a qualified exchange program, be sure the cylinder has a Type 1 valve and an over-fill prevention device (OPD).

LEAK TEST

Although all gas connections on the grill are leak tested at the factory prior to shipment, a complete gas tightness check must be performed after assembly to ensure fittings were not damaged after leaving the factory. Periodically check the entire system for leaks following the procedures listed below.

BEFORE TESTING

Make sure that all packing material is removed from the grill including tie-down straps. Make a soap solution of one part liquid detergent and one part water. You will need a spray bottle, brush, or rag to apply the solution to the fittings. For the initial leak test, make sure the LP cylinder is full.

WARNING

- NEVER PERFORM LEAK TEST WITH AN OPEN FLAME OR WHILE SMOKING.
- If there is excessive abrasion, wear, or damage to the hose, parts must be replaced prior to operation. The replacement hose must be specified by the manufacturer.

TO TEST

1. Make sure the control valves are in the **OFF** position, then turn on the gas supply.

2. Check all connections from the gas cylinder, LP gas regulator, and supply valve, including all connections to the pipe for the burners.

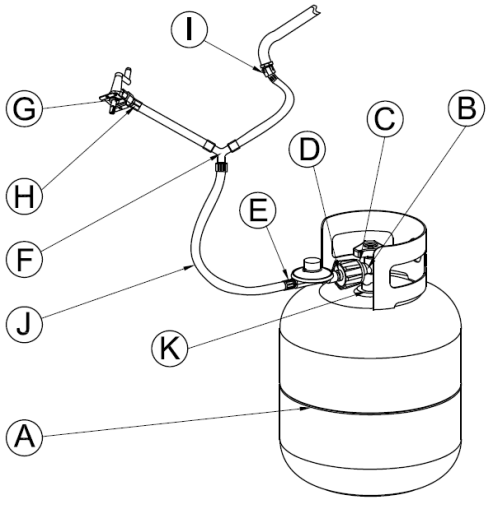

Points where the soap-water mixture should be applied (soap bubbles will appear if a leak is present):

A. Supply tank (Cylinder) weld.
B. Connection nut to tank valve.
C. Back side of connection nut to brass nipple.
D. Brass nipple connections to gas supply hoses.
E. Regulator connections to gas supply hose.
F. Gas supply hose connection to side burner valve assembly.
G. Side burner valve stem cap.
H. Side burner connection to hose.
I. Hose connection to gas manifold.
J. The full length of gas supply hose.
K. Tank valve to cylinder.

3. If a leak is present, immediately turn off the gas supply and tighten the leaky fittings.

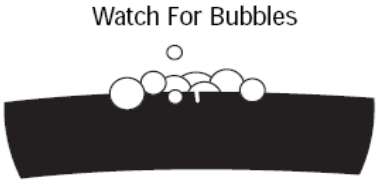

4. Turn the gas back on and recheck.

5. Should gas continue to leak from any of the fittings, turn off the gas supply and contact customer service department at 1-888-837-1380, 8am - 5pm, PST, Monday - Friday.

BEFORE LIGHTING

WARNING

- Inspect the gas supply hose prior to turning the gas **ON**.
- If there are cuts or abrasion on the hose, it must be replaced before further use.
- Do NOT use the grill if the odor of gas is present.
- Only the pressure regulator and hose assembly supplied with the unit should be used.
- Perform the "**LEAK TEST**" according to the instructions before operating the grill
- **ALWAYS** keep your face and body away from the burner while lighting.

Danger

DANGER

(a) Do not store a spare LP gas cylinder under or near this appliance;
(b) Never fill the cylinder beyond 80 percent full;
(c) If the information in (a) and (b) is not followed exactly, a fire causing death or serious injury may occur.

DANGER

- DO NOT connect this grill to an existing #510 POL cylinder valve with Left hand threads. The Type 1 valve can be identified with the large external threads on the valve outlet.
- DO NOT connect to a propane cylinder exceeding its capacity.
- DO NOT connect to a cylinder that uses any other type of valve connection device.
- Keep the ventilation opening(s) of the LP gas cylinder enclosure free and clear from obstructions and debris.
- DO NOT insert any foreign objects into the valve outlet. Damage to the valve outlet could result. A damaged valve outlet can cause a leak, which could result in explosions, fire, severe bodily harm, or death.

DANGER

- Keep your face and hands as far away from the grill as possible when lighting.

Troubleshooting

Problem	Possible Cause	Prevention / Solution
Burner Will Not Light	1. LP cylinder fuel is used up. 2. Bad electrode spark. 3. Burner may not be properly seated. 4. Burner may be obstructed. 5. Cylinder valve may be closed. 6. Regulator is not properly seated on cylinder valve.	1. Change a new, full LP cylinder. 2. Electrode or collector needs adjustments. 3. Refer “To Reinstall The Main Burners” on pg. 37 to reinstall burner. 4. Refer to “Burner Cleaning” on pg. 36-37 to clean the burner. 5. Open the cylinder valve. 6. Refer to “Connection Procedures” on pg. 6 to reinstall the regulator properly.
Fire at Control Knob	1. Burner is improperly seated on control valve. 2. Gas connections may be loose. 3. Burner holes may be obstructed.	1. Refer “To Reinstall The Main Burners” on pg. 37 to reinstall burner. 2. Refer to “Leak Check” on pg. 30-31 to check and tighten all connections. 3. Refer to “Burner Cleaning” on pg. 36-37 to clean the burner.
Yellow Flame at Burner	Burner is obstructed.	Refer to “Burner Cleaning” on pg. 36-37 to clean the burner.
Flame Blows Out on “LOW”	1. Burner holes may be obstructed. 2. Grill is not sufficiently preheated. 3. Burner is improperly seated on control valve.	1. Refer to “Burner Cleaning” on pg. 36-37 to clean the burner. 2. Preheat the grill for 10 minutes. 3. Refer “To Reinstall The Main Burners” on pg. 37 to reinstall burner.
Burner Does not Get Hot Enough	Flow control device has been activated in regulator.	Reset the regulator, turn off all burners, and close the LP tank valve. Disconnect the regulator from the LP tank and wait one minute. Reconnect the regulator to the LP tank and slowly open the LP tank valve until the valve is fully open. Light all burners and observe the temperature.
Grill is Too Hot	1. Excess grease build-up causing grease fires. 2. Damaged or faulty regulator.	1. Refer to “Maintenance and Cleaning instructions” on pg. 35-38 to clean the grill properly. 2. Replace the damaged parts with factory authorized component.

Care & Use Instructions

LIGHTING INSTRUCTION: MAIN BURNER AND SIDE BURNER

1. Read instructions before lighting.
2. Open lid before lighting burner.
3. Make sure all control knobs are in the "**OFF**" position.

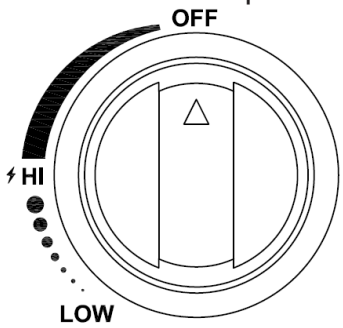

4. Turn ON gas valve from source or tank.
5. Push and turn any main burner or side burner control knob to "HI" and immediately press and hold the electronic ignition button.

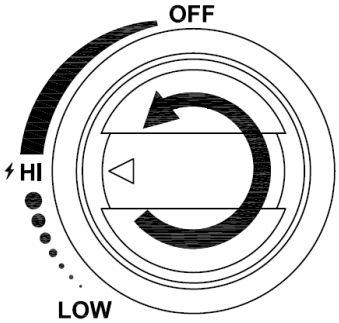

6. If ignition does NOT occur in 5 seconds, turn the burner control knob off, wait 5 minutes to allow gas to dissipate. Repeat the lighting procedure.
7. Repeat above steps to light each burner individually.
8. To turn burners off, turn the control knobs clockwise until they lock in the **OFF** position.

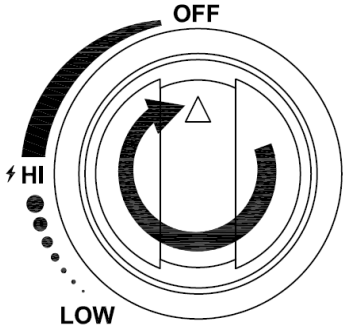

LIGHTING INSTRUCTION: MATCH HOLDER TO LIGHT BURNER

1. Turn off all burner valves.
2. Make sure the lid is open.
3. Place a lighted match on the match holder and hold next to the burner.
4. Turn the control knob(s) to the "**HI**" position. Burner should light immediately.
5. If the burner does not light in 5 seconds, turn the knob off and wait for 5 minutes then repeat above procedures.

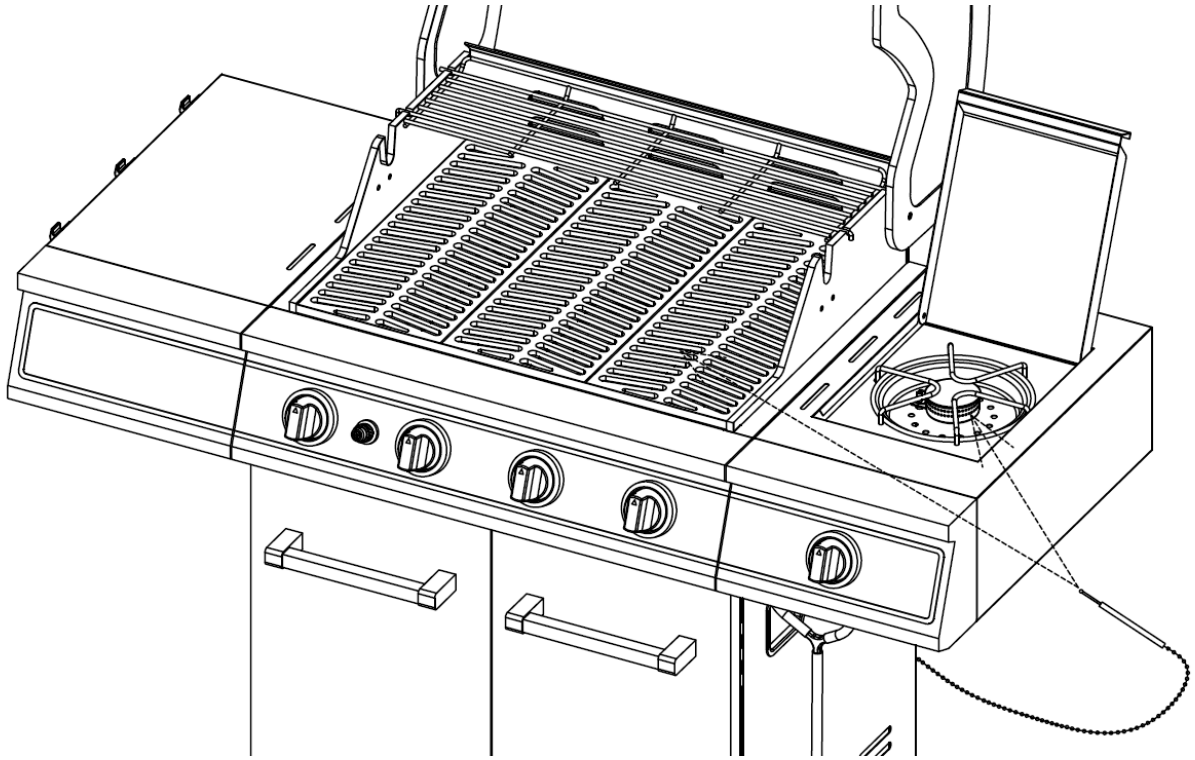

MAINTENANCE & CLEANING INSTRUCTION

CAUTION

Cleaning should be conducted periodically, especially at the start of the season.

- Keep cooking area clear and free from combustible materials, gasoline and other flammable vapors and liquids.
- Do not obstruct combustible and ventilation airflow.
- Keep the ventilation openings of the cylinder enclosure free and clear of debris.
- Check and clean burner/venturi tubes for insects and insect nests. A clogged tube can lead to a fire beneath the grill.

STEEL SURFACES

There are different stainless steel cleaners available. Always use the mildest one for cleaning first and scrub in the direction of the grain. To touch up noticeable scratches in the stainless steel, sand very lightly with dry 100 grit emery paper in the direction of the grain. Specks of grease can gather on the surfaces of the stainless steel and bake on to the surface, giving the appearance of rust. To remove, use a soft abrasive pad in conjunction with a stainless steel cleaner.

GREASE CUP

The grease cup should be emptied, wiped down periodically, then washed with a mild detergent and warm water solution. Check the grease cup frequently. Don't allow excess grease to accumulate and overflow the grease cup.

GRILL BURNERS

Extreme care should be taken when removing a burner, as it must be correctly centered before an attempt is made to relight the grill. Frequency of cleaning will depend on how often you use the grill.

Spiders and small insects occasionally spin webs or make nests in the grill burner tubes during transit and warehousing. These webs can lead to gas flow obstruction that could result in a fire in and around burner tubes. This type of fire is known as flashback and can cause serious damage to your grill and create an unsafe operating condition for the user. Although an obstructed burner tube is not the only cause of flashback, it is the most common cause. To reduce the chance of flashback, you must clean the burner tubes before assembling your grill, and at least once a month in late summer or early fall when spiders are most active. Also, perform this burner tube cleaning procedure if your grill has not been used for an extended period of time.

You should inspect the burners at least once a year or immediately after any of the following conditions occur:

1. **The smell of gas in conjunction with the burner flames appearing yellow.**
2. **The grill does not reach temperature.**
3. **The grill heats unevenly.**
4. **The burners make popping noises.**

BURNER CLEANING:

1. Turn off the gas supply, and make sure all the knobs are in the **OFF** position.
2. Wait for the grill to cool.
3. Open the lid and remove the cooking grate and heat distribution plate.
4. Remove the cotter pin and lift the burner out of the firebox.

Clean the exterior of the burner with a brass brush. Use a metal scraper to remove stubborn stains.

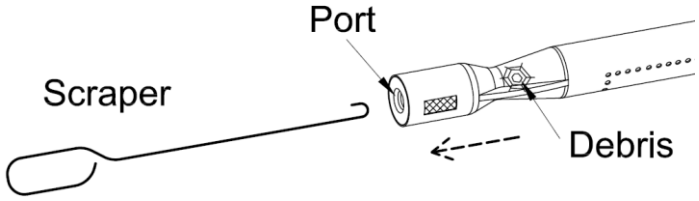

5. Clear clogged ports with a straightened paper clip. Never use a wooden toothpick as it may break off and clog the port.
6. If insects or other obstructions are blocking the flow of gas through the burner, call customer service at 1-888-837-1380.

MAIN BURNER REPLACEMENT:

1. Remove the flame tamers.
2. Remove the burner cotter pin as shown.
3. Remove the burner from the grill body.

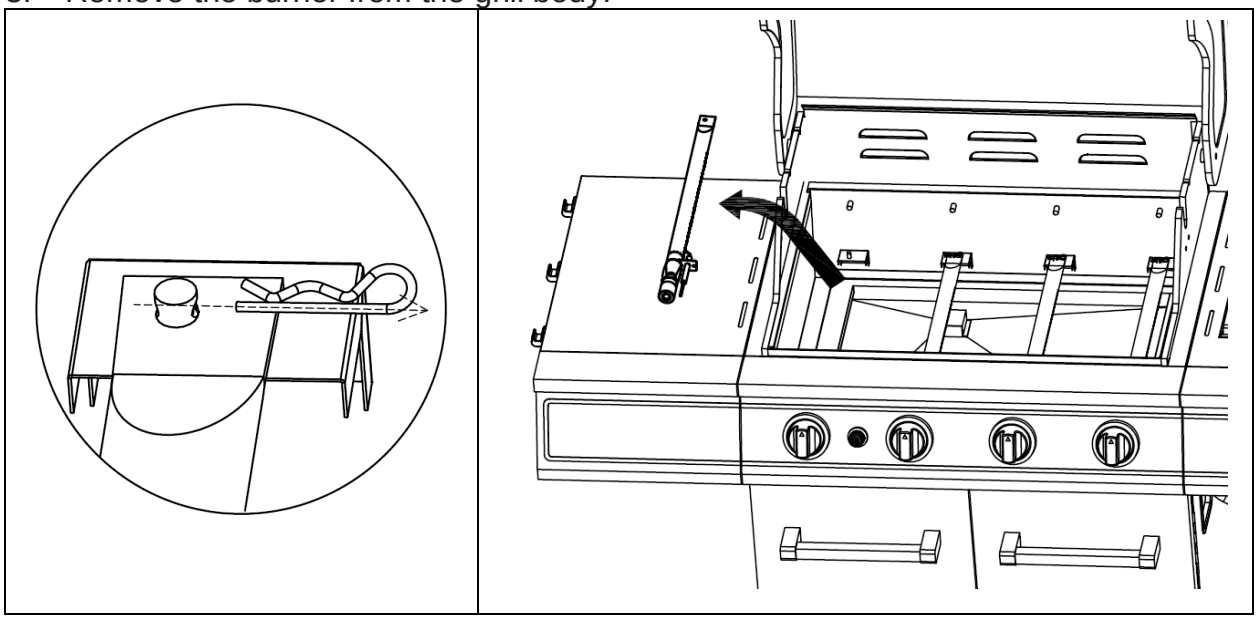

TO REINSTALL THE MAIN BURNERS:

1. Insert the burner into the burner valve.
2. Firmly seat the valve connector into the burner tube. Make sure connector is inserted STRAIGHT into the burner tube as shown below.
3. Position the main burner onto the burner support at the firebox. Reinstall the burner fixing pin.

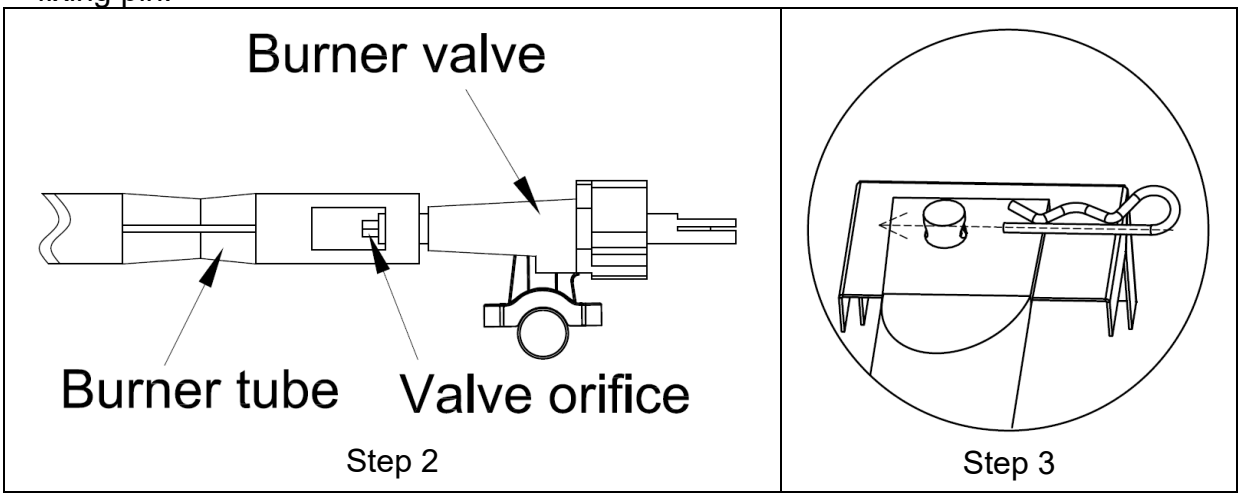

Step 2

Step 3

SIDE BURNER REPLACEMENT

1. Open the side burner lid and remove the side burner grate.
2. Remove the burner fixing nut as shown.
3. Remove the burner as shown.

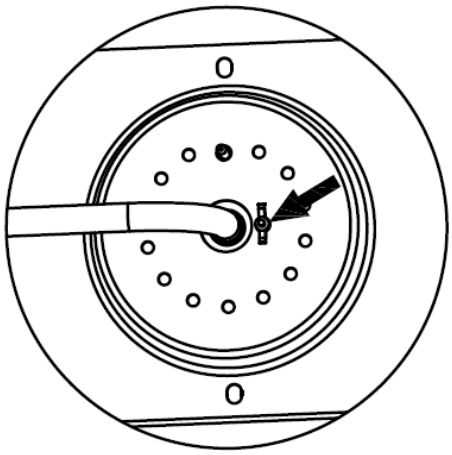

Step 2

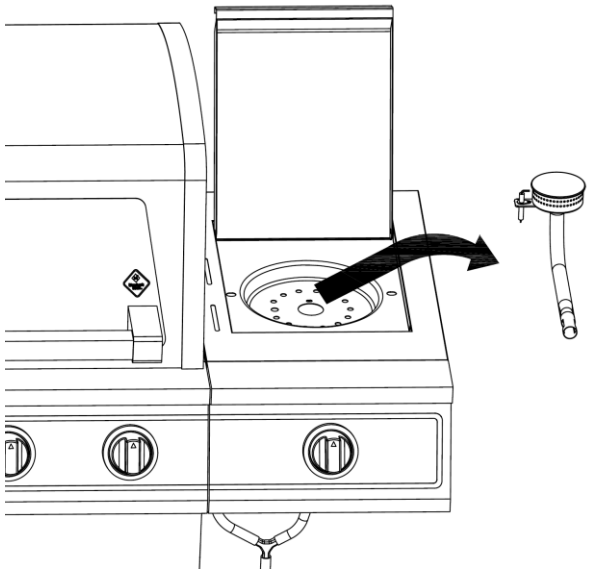

Step 3

PROPERLY INSTALL THE BURNER

Firmly seat the valve orifice into the burner tube. Make sure the valve orifice is inserted STRAIGHT into the burner tube.
Burner flames will be yellow, with excessive noise, lifting or flash back if the burner is not installed properly.

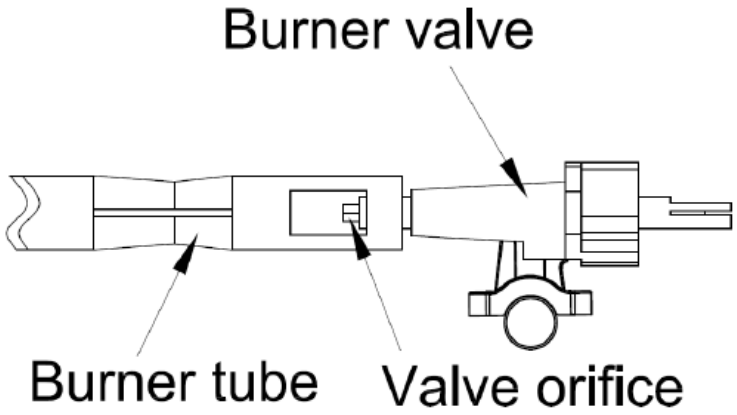

Technical Data

Input rating: 4 x 12,000 BTU/HR (Main burner)
1 x 12,000 BTU/HR (Side burner)

Need Assistance? Visit us at: samsclub.com/membersmarkhelp

Warranty Information

1. Manufacturer warrants this Product to be free from defects in workmanship and materials for a period of Ninety (90) days from the date of purchase, PROVIDED claims are submitted, in writing, with proof of purchase.
2. If any part of this item fails because of a manufacturing defect within the Limited Warranty Period, Manufacturer offers to replace such part(s) provided that such parts have not been improperly repaired, altered, or tampered with or subject to misuse, abuse or exposed to corrosive conditions. This Limited Warranty is, however, subject to certain limitations, exclusions, time limits and exceptions (Hereinafter "Conditions") as listed below. Read these Conditions carefully.
3. This Limited Warranty shall be limited to the replacement or repair of any part(s) which Manufacturer determines, after reasonable examination, to have been defective at the time of manufacturing and manufacturer's obligation(s) shall be limited to replacement, if any, of defective part(s) which shall be shipped at Original Purchaser's expense to Original Purchaser's designated shipping address.
4. This Limited Warranty is given to and covers the **ORIGINAL PURCHASER ONLY** and such coverage terminates Ninety (90) days from the date of purchase.
5. **DAMAGE LIMITATION WARNING:** IN NO EVENT SHALL MANUFACTURER BE LIABLE FOR ANY INCIDENTIAL OR CONSEQUENTIAL DAMAGES, INCLUDING (BUT NOT LIMITED TO) LOSS OF USE OF THE PRODUCT, LOSS OF TIME, LOSS OF FOOD, INCONVENIENCE, EXPENSES FOR TRAVEL, TRANSPORTATION LODGING EXPENSES, LOSS BY DAMAGE TO PERSONAL PROPERTY OR LOSS OF INCOME, PROFITS OR REVENUE.
6. **MANUFACTURER'S OBLIGATION:** Manufacturer's liability shall be limited to the delivery of a good, merchantable Product and, if necessary, the repair or replacement, at manufacturer's option, of any defective part or unit.
7. **TRANSFER LIMITATIONS:** This Limited Warranty is not assignable or transferable. It covers only the original purchaser.
8. **RESERVED RIGHT TO CHANGE:** Manufacturer reserves the right to make changes or improvements to products it produces in the future without imposing on itself any obligations to install the same improvements in the products it has previously manufactured.
9. This Limited Warranty gives the Original Purchaser specific legal rights but there may be other rights which vary by jurisdiction.
10. This warranty does not cover the following items:
    - Chips or scratches on porcelain or painted surfaces.
    - Rust or corrosion is not deemed a manufacturing or materials defect.
    - Discoloration or loss of paint due to handling during assembly, heat or cleaning products. Paint may require touch up.
    - Stainless steel discoloration or corrosion.
    - Consumables such as batteries.

IF CUSTOMER SERVICE BECOME NECESSARY:

1. The Original Purchaser is responsible for shipping and handling charges of the returned item(s) and replacement parts, if any.
2. All parts to be replaced will need to be shipped before replacement items will be sent.
3. Follow the Customer Service Representative's instructions exactly. If a return is necessary, it must be packed carefully and shipped prepaid.

Should you encounter any problem,
CALL US FIRST.
Do not return product to the store.
WE CAN HELP.

For assistance, contact customer service at **customerservice@rankam.com**
or at 1-888-837-1380, Mon to Fri, 8:00am – 5:00pm Pacific Standard time

Manufacturer information
Rankam (China) Manufacturing Company Limited
Address: 18/F, New Lee Wah Centre, 88 Tokwawan Road, Kowloon, Hong Kong.

NOTE: Please consider recycling all applicable packaging material.

Distributed by Sam's West Inc.
2101 SE Simple Savings Dr.
Bentonville, Arkansas 72716-0745

Made in China

Need Assistance? Visit us at: samsclub.com/membersmarkhelp