LaserJet Pro MFP M148-M149
LaserJet Pro MFP M227-M229
LaserJet Ultra MFP M230-M231

User Guide

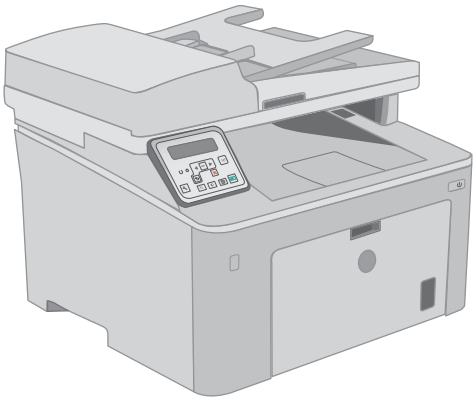
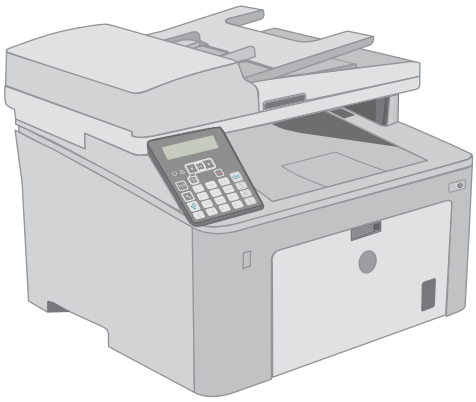
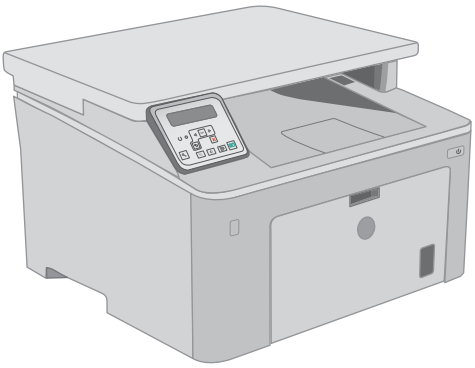
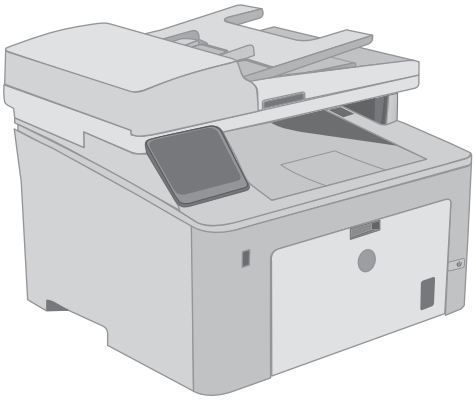

M148-M149
M227-M229
M230-M231

www.hp.com/support/ljM148MFP
www.hp.com/support/ljM227MFP

HP LaserJet Pro MFP M148-M149
HP LaserJet Pro MFP M227-M229
HP LaserJet Ultra MFP M230-M231

User Guide

Copyright and License

© Copyright 2018 HP Development Company, L.P.

Reproduction, adaptation, or translation without prior written permission is prohibited, except as allowed under the copyright laws.

The information contained herein is subject to change without notice.

The only warranties for HP products and services are set forth in the express warranty statements accompanying such products and services. Nothing herein should be construed as constituting an additional warranty. HP shall not be liable for technical or editorial errors or omissions contained herein.

Edition 3, 6/2018

Trademark Credits

Adobe®, Adobe Photoshop®, Acrobat®, and PostScript® are trademarks of Adobe Systems Incorporated.

Apple and the Apple logo are trademarks of Apple Inc., registered in the U.S. and other countries.

macOS is a trademark of Apple Inc., registered in the U.S. and other countries.

OS X is a trademark of Apple Inc., registered in the U.S. and other countries.

AirPrint is a trademark of Apple Inc., registered in the U.S. and other countries.

iPad is a trademark of Apple Inc., registered in the U.S. and other countries.

iPod is a trademark of Apple Inc., registered in the U.S. and other countries.

iPhone is a trademark of Apple Inc., registered in the U.S. and other countries.

Microsoft®, Windows®, Windows® XP, and Windows Vista® are U.S. registered trademarks of Microsoft Corporation.

UNIX® is a registered trademark of The Open Group.

Table of contents

1 Printer overview 1
Printer views 2
Printer front view 2
Printer back view 3
Interface ports 4
2-line LCD control panel view (M148dw, M227d, M227sdn, M230sdn models) 5
2-line LCD control-panel view (M148fdw, M227fdn models) 6
Touchscreen control panel view (M227fdw, M230fdw models) 8
Home screen layout 9
How to use the touchscreen control panel 10
Printer specifications 11
Technical specifications 11
Supported operating systems 11
Mobile printing solutions 13
Printer dimensions 13
Power consumption, electrical specifications, and acoustic emissions 14
Operating environmental range 14
Printer hardware setup and software installation 15

2 Paper trays 17
Load the Priority input tray 18
Introduction 18
Priority input tray paper orientation 20
Load the Main input tray 21
Introduction 21
Main input tray paper orientation 24
Load and print envelopes 25
Introduction 25
Print envelopes 25
Envelope orientation 26
Load and print labels 27
Introduction 27

Manually feed labels 27
Label orientation 28

3 Supplies, accessories, and parts 29
Order supplies, accessories, and parts 30
Ordering 30
Supplies and accessories 30
Customer self-repair parts 30
Configure the HP toner-cartridge-protection supply settings 32
Introduction 32
Enable or disable the Cartridge Policy feature 32
Use the printer control panel to enable the Cartridge Policy feature 32
Use the printer control panel to disable the Cartridge Policy feature 32
Use the HP Embedded Web Server (EWS) to enable the Cartridge Policy feature 33
Use the HP Embedded Web Server (EWS) to disable the Cartridge Policy feature 33
Troubleshoot Cartridge Policy control panel error messages 34
Enable or disable the Cartridge Protection feature 34
Use the printer control panel to enable the Cartridge Protection feature 34
Use the printer control panel to disable the Cartridge Protection feature 34
Use the HP Embedded Web Server (EWS) to enable the Cartridge Protection feature 34
Use the HP Embedded Web Server (EWS) to disable the Cartridge Protection feature 35
Troubleshoot Cartridge Protection control panel error messages 36
Replace the toner cartridge 37
Introduction 37
Toner-cartridge information 37
Remove and replace the toner cartridge 38
Replace the imaging drum 42
Introduction 42
Imaging drum information 42
Remove and replace the imaging drum 43

4 Print 47
Print tasks (Windows) 48
How to print (Windows) 48
Automatically print on both sides (Windows) 48
Manually print on both sides (Windows) 49
Print multiple pages per sheet (Windows) 49
Select the paper type (Windows) 50
Additional print tasks 51
Print tasks (OS X) 52
How to print (OS X) 52

Automatically print on both sides (OS X) 52
Manually print on both sides (OS X) 52
Print multiple pages per sheet (OS X) 53
Select the paper type (OS X) 53
Additional print tasks 54
Mobile printing 55
Introduction 55
Wi-Fi Direct (wireless models only) 55
Enable or disable Wi-Fi Direct 57
Change the printer Wi-Fi Direct name 57
HP ePrint via email 58
HP ePrint software 59
AirPrint 60
Android embedded printing 61
Use walk-up USB printing (touchscreen models only) 62
Introduction 62
Step one: Access USB files on the printer 62
Step two: Print USB documents 62
Option one: Print documents 62
Option two: Print photos 63

5 Copy 65
Make a copy 66
Copy on both sides (duplex) 68
Copy on both sides manually 68
Additional copy tasks 70

6 Scan 71
Scan by using the HP Scan software (Windows) 72
Scan by using the HP Easy Scan software (OS X) 73
Set up the Scan to E-mail feature (touchscreen models only) 74
Introduction 74
Before you begin 74
Method one: Use the Scan to Email Wizard (Windows) 74
Method two: Set up the Scan to Email feature via the HP Embedded Web Server (Windows) 76
Step one: Access the HP Embedded Web Server (EWS) 76
Step two: Configure the Scan to E-mail feature 76
Step three: Add contacts to the E-mail Address Book 78
Step four: Configure the default E-mail Options 78
Set up the Scan to E-mail feature on a Mac 79
Step one: Access the HP Embedded Web Server (EWS) 79

Method one: Use a web browser to open the HP Embedded Web Server (EWS) 79
Method two: Use the HP Utility to open the HP Embedded Web Server (EWS) 79
Step two: Configure the Scan to E-mail feature 79
Step three: Add contacts to the E-mail Address Book 81
Step four: Configure the default E-mail Options 81
Set up the Scan to Network Folder feature (touchscreen models only) 82
Introduction 82
Before you begin 82
Method one: Use the Scan to Network Folder Wizard (Windows) 82
Method two: Set up the Scan to Network Folder feature via the HP Embedded Web Server (Windows) 84
Step one: Access the HP Embedded Web Server (EWS) 84
Step two: Configure the Scan to Network Folder feature 84
Set up the Scan to Network Folder feature on a Mac 85
Step one: Access the HP Embedded Web Server (EWS) 86
Method one: Use a web browser to open the HP Embedded Web Server (EWS) 86
Method two: Use the HP Utility to open the HP Embedded Web Server (EWS) 86
Step two: Configure the Scan to Network Folder feature 86
Scan to a USB flash drive (touchscreen models only) 88
Scan to email (touchscreen models only) 89
Scan to a network folder (touchscreen models only) 90
Additional scan tasks 91

7 Fax 93
Set up to send and receive faxes 94
Before starting 94
Step 1: Identify the phone connection type 94
Step 2: Set up the fax 95
Dedicated phone line 95
Shared voice/fax line 96
Shared voice/fax line with an answering machine 97
Step 3: Configure the fax time, date, and header 98
HP Fax Setup Wizard 98
Printer control panel 99
HP Embedded Web Server (EWS) and HP Device Toolbox (Windows) 99
Step 4: Run a fax test 100
Send a fax 101

Fax from the flatbed scanner 101
Fax from the document feeder 102
Use speed dials and group-dial entries 102
Send a fax from the software 103
Send a fax from a third-party software program, such as Microsoft Word 103
Additional fax tasks 104

8 Manage the printer 105
Use HP Web Services applications (touchscreen models only) 106
Change the printer connection type (Windows) 107
Advanced configuration with HP Embedded Web Server (EWS) and HP Device Toolbox (Windows) 108
Advanced configuration with HP Utility for OS X 112
Open HP Utility 112
HP Utility features 112
Configure IP network settings 114
Introduction 114
Printer sharing disclaimer 114
View or change network settings 114
Rename the printer on a network 115
Manually configure IPv4 TCP/IP parameters from the control panel 116
Link speed and duplex settings 117
Printer security features 119
Introduction 119
Assign or change the system password using the Embedded Web Server 119
Lock the formatter 120
Configure the Quiet Print Mode settings 121
Introduction 121
Method one: Configure the Quiet Print Mode settings from the printer control panel 121
Method two: Configure the Quiet Print Mode settings from HP Embedded Web Server (EWS) 122
Energy-conservation settings 123
Introduction 123
Print with EconoMode 123
Set the Sleep/Auto Off After Inactivity setting 123
Set the Shut Down After Inactivity delay and configure the printer to use 1 watt or less of power . 124
Set the Delay Shut Down setting 125
Update the firmware 127
Method one: Update the firmware using the control panel 127
Method two: Update the firmware using the Firmware Update Utility 128

9 Solve problems 129
Customer support 130

Control panel help system (touchscreen models only) 131
Restore the factory-set defaults 132
A “Cartridge is low” or “Cartridge is very low” message displays on the printer control panel 133
Change the “Very Low” settings 133
For printers with fax capability 134
Order supplies 134
Printer does not pick up paper or misfeeds 135
Introduction 135
The printer does not pick up paper 135
The printer picks up multiple sheets of paper 136
The document feeder jams, skews, or picks up multiple sheets of paper 137
Clear paper jams 138
Introduction 138
Jam locations 138
Experiencing frequent or recurring paper jams? 139
Clear jams in the document feeder 141
Clear jams in the Main input tray 144
Clear jams in the toner-cartridge area 149
Clear jams in the output bin 153
Clear jams in the duplexer 156
Clean the ADF replaceable film assembly 160
Improve print quality 162
Introduction 162
Print from a different software program 162
Check the paper-type setting for the print job 162
Check the paper type setting (Windows) 162
Check the paper type setting (OS X) 163
Check toner-cartridge status 163
Clean the printer 164
Print a cleaning page 164
Check the scanner glass for dirt and smudges 165
Visually inspect the toner cartridge and imaging drum 165
Check paper and the printing environment 166
Step one: Use paper that meets HP specifications 166
Step two: Check the environment 166
Step three: Set the individual tray alignment 166
Try a different print driver 167
Check the EconoMode settings 168
Adjust Print Density 168
Improve copy and scan image quality 170
Introduction 170

Check the scanner glass for dirt and smudges 170
Check the paper settings 171
Optimize for text or pictures 172
Edge-to-edge copying 173
Clean the pickup rollers and separation pad in the document feeder 173
Improve fax image quality 175
Introduction 175
Check the scanner glass for dirt and smudges 175
Check the send-fax resolution settings 176
Check the error-correction settings 177
Check the fit-to-page setting 179
Clean the pickup rollers and separation pad in the document feeder 180
Send to a different fax machine 181
Check the sender's fax machine 181
Solve wired network problems 182
Introduction 182
Poor physical connection 182
The computer is using the incorrect IP address for the printer 182
The computer is unable to communicate with the printer 182
The printer is using incorrect link speed and duplex settings for the network 183
New software programs might be causing compatibility problems 183
The computer or workstation might be set up incorrectly 183
The printer is disabled, or other network settings are incorrect 183
Solve wireless network problems 184
Introduction 184
Wireless connectivity checklist 184
The printer does not print after the wireless configuration completes 185
The printer does not print, and the computer has a third-party firewall installed 185
The wireless connection does not work after moving the wireless router or printer 185
Cannot connect more computers to the wireless printer 185
The wireless printer loses communication when connected to a VPN 186
The network does not appear in the wireless networks list 186
The wireless network is not functioning 186
Perform a wireless network diagnostic test 186
Reduce interference on a wireless network 187
Solve fax problems 188
Introduction 188
Fax troubleshooting checklist 188
Solve general fax problems 189
Faxes are sending slowly 189
Fax quality is poor 190

Fax cuts off or prints on two pages 191

Index 193

1 Printer overview

- Printer views
- Printer specifications
- Printer hardware setup and software installation

For more information:

The following information is correct at the time of publication. For current information, see www.hp.com/support/ljM148MFP, www.hp.com/support/ljM227MFP.

HP's all-inclusive help for the printer includes the following information:

- Install and configure
- Learn and use
- Solve problems
- Download software and firmware updates
- Join support forums
- Find warranty and regulatory information

Printer views

- Printer front view
- Printer back view
- Interface ports
- 2-line LCD control panel view (M148dw, M227d, M227sdn, M230sdn models)
- 2-line LCD control-panel view (M148fdw, M227fdn models)
- Touchscreen control panel view (M227fdw, M230fdw models)

Printer front view

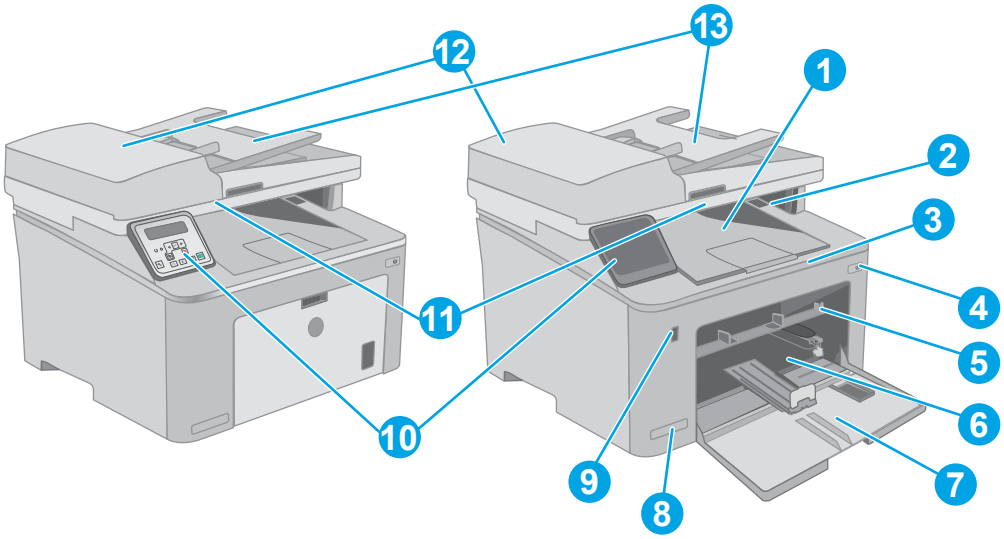

1	Output bin
2	Toner cartridge door
3	Output bin extension
4	Power button
5	Priority input tray
6	Main input tray
7	Main input tray door
8	Model name
9	Walk-up USB port (for printing and scanning without a computer) (Touchscreen models only)
10	Control panel
11	Scanner
12	Document feeder
13	Document feeder input tray

Printer back view

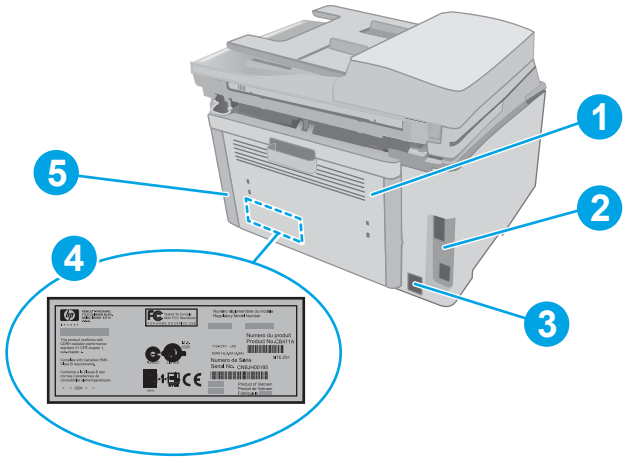

1	Rear door (access for clearing jams)
2	Interface ports
3	Power connection
4	Serial number and product number label
5	Slot for cable-type security lock (on the rear cover of the printer)

Interface ports

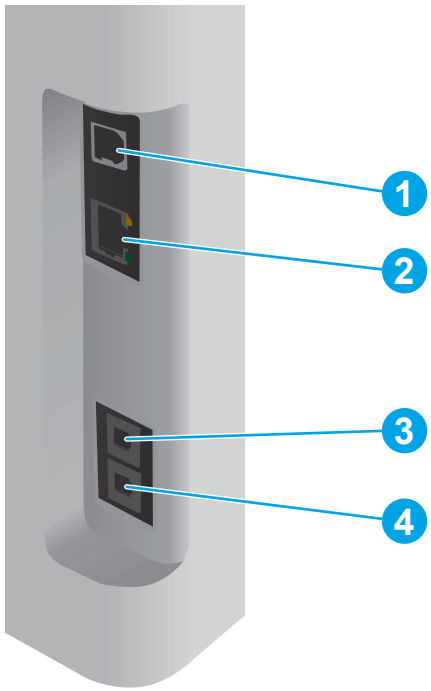

1	USB interface port
2	Ethernet port
3	Fax “line in” port (for attaching the fax phone line to the printer) (fax models only)
4	Telephone “line out” port (for attaching an extension phone, answering machine, or other device) (fax models only)

2-line LCD control panel view (M148dw, M227d, M227sdn, M230sdn models)

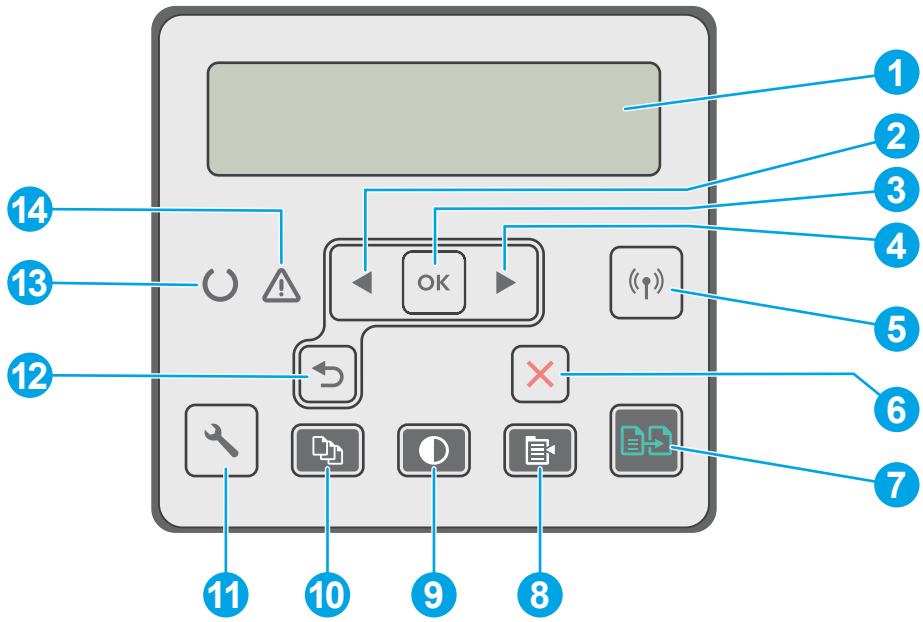

1	Control panel display	This screen displays menus and printer information.
2	Left arrow ◀ button	Use this button to navigate through the menus or to decrease a value that appears on the display.
3	OK button	Press the OK button for the following actions: • Open the control-panel menus. • Open a submenu displayed on the control-panel display. • Select a menu item. • Clear some errors. • Begin a print job in response to a control-panel prompt (for example, when the message **Press [OK] to continue** appears on the control-panel display).
4	Right arrow ▶ button	Use this button to navigate through the menus or to increase a value that appears on the display.
5	Wireless button (wireless model only)	Use this button to navigate the open the Wireless menu and wireless status information.
6	Cancel ✕ button	Press this button to cancel a print job or to exit the control panel menus.
7	Start Copy button	Use this button to start a copy job.
8	Copy Menu button	Use this button to open the Copy menu.
9	Copy lighten/darken button	Use this button to lighten or darken copies.
10	Number of copies button	Use this button to set the number of copies to be produced.

11	Setup button	Use this button to open the Setup menu.
12	Back arrow button	Use this button for the following actions: • Exit the control-panel menus. • Scroll back to a previous menu in a submenu list. • Scroll back to a previous menu item in a submenu list (without saving changes to the menu item).
13	Ready light (green)	The Ready light is on when the printer is ready to print. It blinks when the printer is receiving print data, canceling a print job, or when the printer is in sleep mode.
14	Attention light (amber)	The Attention light blinks when the printer requires user attention. If the Attention light is on, the printer is in an error state.

2-line LCD control-panel view (M148fdw, M227fdn models)

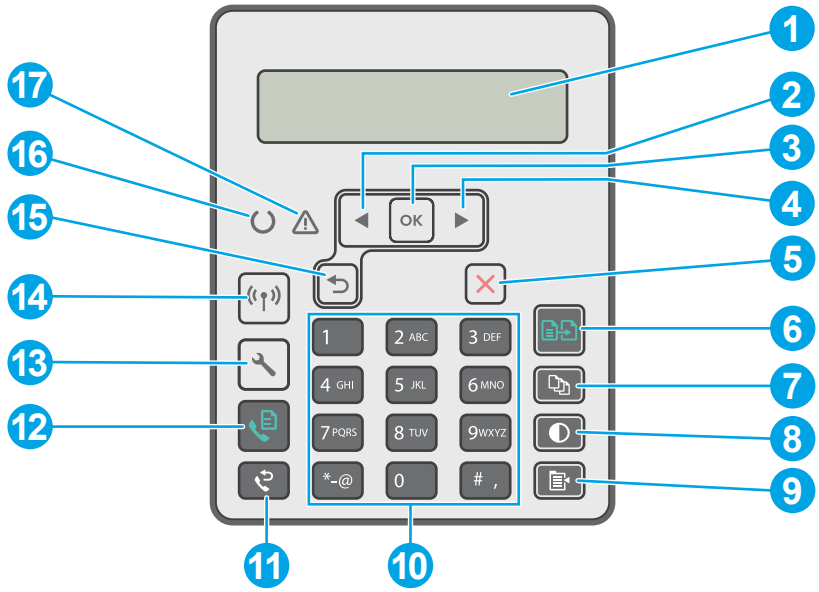

1	2-line control panel display	This screen displays menus and printer information.
2	Left arrow button	Use this button to navigate through the menus or to decrease a value that appears on the display.
3	OK button	Use the OK button for the following actions: • Open the control-panel menus. • Open a submenu displayed on the control-panel display. • Select a menu item. • Clear some errors. • Begin a print job in response to a control-panel prompt (for example, when the message **Press [OK] to continue** appears on the control-panel display).
4	Right arrow button	Use this button to navigate through the menus or to increase a value that appears on the display.

5	Cancel button	Use this button to cancel a print job or to exit the control panel menus.
6	Start Copy button	Use this button to start a copy job.
7	Number of Copies button	Use this button to set the number of copies to be produced.
8	Lighter/Darker button	Use this button to adjust the darkness setting for the current copy job.
9	Copy Menu button	Use this button to open the **Copy** menu.
10	Alphanumeric keypad	Use the keypad to provide fax numbers.
11	Fax Redial button	Use this button to recall the fax number used for the previous fax job.
12	Start Fax button	Use this button to start a fax job.
13	Setup button	Use this button to open the **Setup** menu.
14	Wireless button (wireless model only)	Use this button to navigate the open the Wireless menu and wireless status information.
15	Back arrow button	Use this button for the following actions: • Exit the control-panel menus. • Scroll back to a previous menu in a submenu list. • Scroll back to a previous menu item in a submenu list (without saving changes to the menu item).
16	Ready LED	The Ready light glows without blinking when the printer is ready to print. It blinks when the printer is receiving print data or canceling a print job.
17	Attention LED	The Attention light blinks when the printer requires user attention, such as when the printer runs out of paper or a toner cartridge needs to be changed. If the light glows without blinking, the printer has experienced an error.

Touchscreen control panel view (M227fdw, M230fdw models)

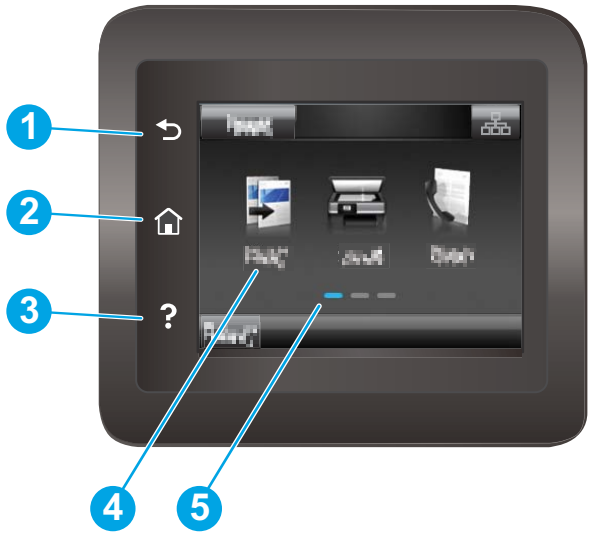

1	Back button	Returns to the previous screen
2	Home button	Provides access to the Home screen
3	Help button	Provides access to the control-panel help system
4	Color touchscreen	Provides access to menus, help animations, and printer information
5	Home page screen indicator	The display indicates which Home screen the control panel is currently displaying

NOTE: While the control panel does not have a standard Cancel button, during many printer processes a Cancel button appears on the touchscreen. This permits users to cancel a process before the printer completes it.

Home screen layout

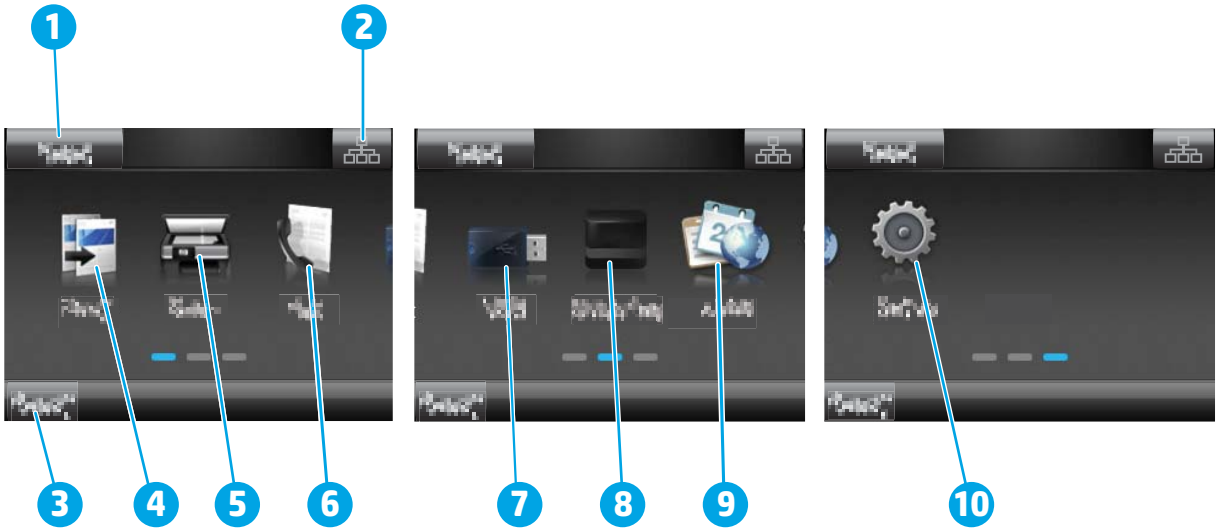

1	Reset button	Touch this button to reset any temporary job settings to the default printer settings.
2	Connection Information button	Touch this button to open the Connection Information menu, which provides network information. The button appears as either a wired network icon or a wireless network icon, depending on the type of network to which the printer is connected.
3	Printer status	This screen area provides information about the overall printer status.
4	Copy	Touch this button to open the copy menu.
5	Scan	Touch this button to open the scan menus: • Scan to USB Drive • Scan to Network Folder • Scan to E-mail
6	Fax	Touch this button to open the fax menus.
7	USB	Touch this button to open the USB Flash Drive menu.
8	Supplies	Touch this button to view information about supplies status.
9	Apps	Touch this button to open the Apps menu to print directly from select Web applications.
10	Setup	Touch this button to open the Setup menu.

How to use the touchscreen control panel

Use the following actions to use the printer touchscreen control panel.

Action	Description	Example
Touch 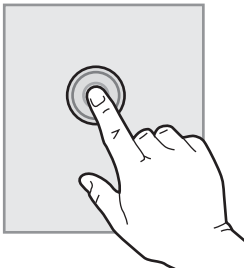	Touch an item on the screen to select that item or open that menu. Also, when scrolling through menus, briefly touch the screen to stop the scrolling.	Touch Setup to open the Setup menu.
Swipe 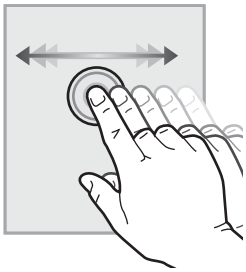	Touch the screen and then move the finger horizontally to scroll the screen sideways.	Swipe the Home screen to access the Setup.
Scroll 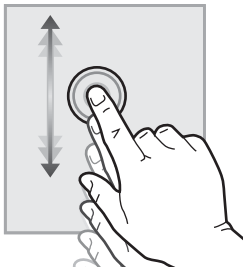	Touch the screen, and then, without lifting the finger, move the finger vertically to move the screen.	Scroll through the Setup menu.

Printer specifications

IMPORTANT: The following specifications are correct at the time of publication, but they are subject to change. For current information, see www.hp.com/support/ljM148MFP, www.hp.com/support/ljM227MFP.

- Technical specifications
- Supported operating systems
- Mobile printing solutions
- Printer dimensions
- Power consumption, electrical specifications, and acoustic emissions
- Operating environmental range

Technical specifications

See www.hp.com/support/ljM148MFP, www.hp.com/support/ljM227MFP for current information.

Supported operating systems

The following information applies to the printer-specific Windows PCL 6 and HP print drivers for OS X and to the software installation.

Windows: The HP Software Installer installs the “HP PCL.6”, the “HP PCL 6”, or the “HP PCL-6” print driver, depending on the Windows operating system, along with optional software when using the full software installer. Download the "HP PCL.6", the "HP PCL 6", and the "HP PCL-6" print driver from the support website for this printer: www.hp.com/support/ljM148MFP, www.hp.com/support/ljM227MFP

Mac computers and OS X: Mac computers are supported with this printer. Download HP Easy Start either from 123.hp.com or from the support website, and then use HP Easy Start to install the HP print driver.

1. Go to 123.hp.com.
2. Follow the steps provided to download the printer software.

Linux: For information and print drivers for Linux, go to hplipopensource.com/hplip-web/index.html

UNIX: For information and print drivers for UNIX®, go to www.hp.com/go/unixmodelscripts

Table 1-1 Supported operating systems and print drivers

Operating system	Print driver installed (from the software on the web)	Notes
Windows® XP SP3, 32-bit	The “HP PCL.6” printer-specific print driver is installed for this operating system as part of the software installation.	Microsoft retired mainstream support for Windows XP in April 2009. HP will continue to provide best effort support for the discontinued XP operating system. Some features of the print driver are not supported.
Windows Vista®, 32-bit	The “HP PCL.6” printer-specific print driver is installed for this operating system as part of the software installation.	Microsoft retired mainstream support for Windows Vista in April 2012. HP will continue to provide best effort support for the discontinued Vista operating system. Some features of the print driver are not supported.

Table 1-1 Supported operating systems and print drivers (continued)

Operating system	Print driver installed (from the software on the web)	Notes
Windows 7, 32-bit and 64-bit	The “HP PCL 6” printer-specific print driver is installed for this operating system as part of the software installation.	
Windows 8, 32-bit and 64-bit	The “HP PCL 6” printer-specific print driver is installed for this operating system as part of the software installation.	Windows 8 RT support is provided through Microsoft IN OS Version 4, 32- bit driver.
Windows 8.1, 32-bit and 64-bit	The “HP PCL-6” V4 printer-specific print driver is installed for this operating system as part of the software installation.	Windows 8.1 RT support is provided through Microsoft IN OS Version 4, 32- bit driver.
Windows 10, 32-bit and 64-bit	The “HP PCL-6” V4 printer-specific print driver is installed for this operating system as part of the software installation.	
Windows Server 2008 SP2, 32-bit	The “HP PCL.6” printer-specific print driver is available for download from the printer-support website. Download the driver, and then use the Microsoft Add Printer tool to install it.	Microsoft retired mainstream support for Windows Server 2008 in January 2015. HP will continue to provide best effort support for the discontinued Server 2008 operating system. Some features of the print driver are not supported.
Windows Server 2008 SP2, 64-bit	The “HP PCL 6” printer-specific print driver is available for download from the printer-support website. Download the driver, and then use the Microsoft Add Printer tool to install it.	Microsoft retired mainstream support for Windows Server 2008 in January 2015. HP will continue to provide best effort support for the discontinued Server 2008 operating system.
Windows Server 2008 R2, SP 1, 64-bit	The “HP PCL 6” printer-specific print driver is installed for this operating system as part of the software installation.	
Windows Server 2012, 64-bit	The “HP PCL 6” printer-specific print driver is installed for this operating system as part of the software installation.	
Windows Server 2012 R2, 64-bit	The “HP PCL-6” printer-specific print driver is installed for this operating system as part of the software installation.	
Windows 10 server (Server 2016), 32-bit and 64-bit	The “HP PCL-6” printer-specific print driver is installed for this operating system as part of the software installation.	
OS X 10.11 El Capitan, macOS 10.12 Sierra, macOS 10.13 High Sierra	To install the print driver, download HP Easy Start from 123.hp.com/LaserJet. Follow the steps provided to install the printer software and print driver.	

NOTE: For a current list of supported operating systems, go to www.hp.com/support/ljM148MFP, www.hp.com/support/ljM227MFP for HP's all-inclusive help for the printer.

NOTE: For details on client and server operating systems and for HP UPD PCL6 and UPD PS driver support for this printer, go to www.hp.com/go/upd and click the **Specifications** tab.

Mobile printing solutions

HP offers multiple mobile and ePrint solutions to enable easy printing to an HP printer from a laptop, tablet, smartphone, or other mobile device. To see the full list and to determine the best choice, go to www.hp.com/go/LaserJetMobilePrinting.

NOTE: Update the printer firmware to ensure all mobile printing and ePrint capabilities are supported.

- Wi-Fi Direct (wireless models only)
- HP ePrint via email (Requires HP Web Services to be enabled and the printer to be registered with HP Connected)
- HP ePrint app (Available for Android, iOS, and Blackberry)
- HP All-in-One Remote app for iOS and Android devices
- HP ePrint software
- Google Cloud Print
- AirPrint
- Android Printing

Printer dimensions

Figure 1-1 Dimensions for the printer

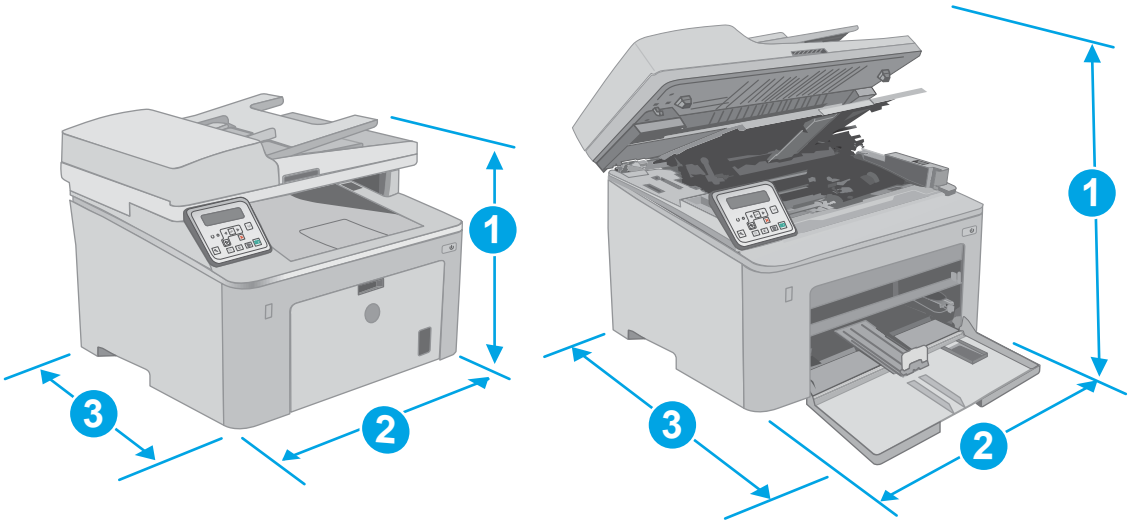

	Printer fully closed	Printer fully open
1. Height	311.5 mm (12.2 in)	419.9 mm (16.5 in)
2. Width	415.1 mm (16.3 in)	415.1 mm (16.3 in)
3. Depth	407.4 mm (16 in)	624.4mm (24.6 in)
Weight (with cartridges)	9.9 kg (21.8 lb)	

Figure 1-2 Printer Dimensions - M227d model

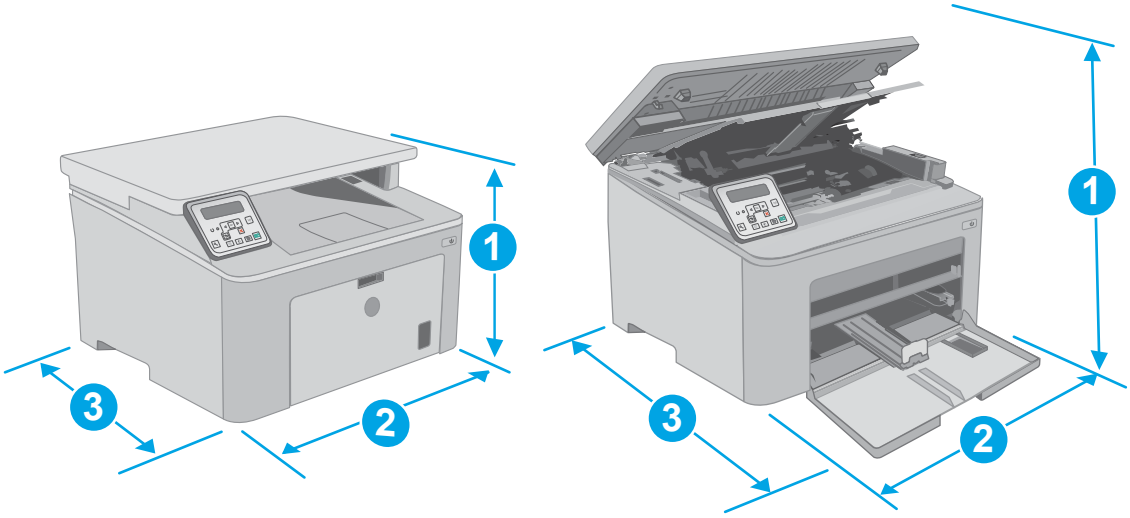

Measurement Type	Printer fully closed	Printer fully open
1. Height	263.1 mm (10.4 in)	419.9 mm (16.5 in)
2. Width	403 mm (15.8 in)	403 mm (15.8 in)
3. Depth	407.4 mm (16 in)	624.4 mm (24.6 in)
Weight (with cartridges)	9.1kg (20.1 lb)	

Power consumption, electrical specifications, and acoustic emissions

See www.hp.com/support/ljM148MFP, www.hp.com/support/ljM227MFP for current information.

⚠ CAUTION: Power requirements are based on the country/region where the printer is sold. Do not convert operating voltages. This will damage the printer and void the printer warranty.

Operating environmental range

Table 1-2 Operating environmental range

Environment	Recommended	Allowed
Temperature	17° to 25°C (62.6° to 77°F)	15° to 30°C (59° to 86°F)
Relative humidity	30% to 70% relative humidity (RH)	10% to 80% (RH)
Altitude	Not applicable	0 to 3048 m (0 to 10,000 ft)

Printer hardware setup and software installation

For basic setup instructions, see the Setup Poster and Getting Started Guide that came with the printer. For additional instructions, go to HP support on the Web.

Go to www.hp.com/support/ljM148MFP, www.hp.com/support/ljM227MFP for HP's all-inclusive help for the printer. Find the following support:

- Install and configure
- Learn and use
- Solve problems
- Download software and firmware updates
- Join support forums
- Find warranty and regulatory information

2 Paper trays

- Load the Priority input tray
- Load the Main input tray
- Load and print envelopes
- Load and print labels

For more information:

The following information is correct at the time of publication. For current information, see www.hp.com/support/ljM148MFP, www.hp.com/support/ljM227MFP.

HP's all-inclusive help for the printer includes the following information:

- Install and configure
- Learn and use
- Solve problems
- Download software and firmware updates
- Join support forums
- Find warranty and regulatory information

Load the Priority input tray

Introduction

The following information describes how to load paper in the Priority input tray. This tray holds up to 10 sheets of 75 g/m^2 (20 lb) paper.

NOTE: To avoid paper jams:

- Never add or remove paper from the Priority input tray during printing.
- Before loading the tray, remove all of the paper from the input tray and straighten the stack.
- When loading the tray, do not fan the paper.
- Use paper that is not wrinkled, folded, or damaged.

1. Open the Main input tray door by grasping the handle and pulling down.

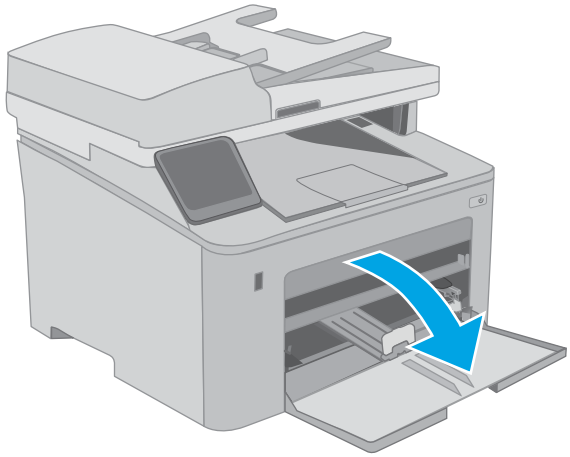

2. Spread the paper-width guides to the correct size.

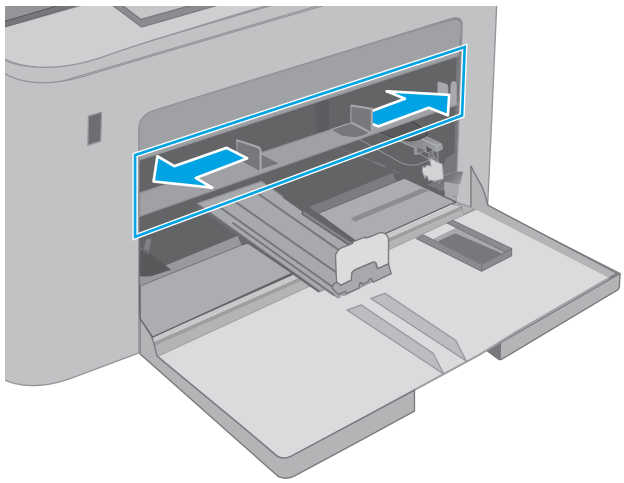

3. Place the top edge of the paper at the opening of the Priority input tray. For information about how to orient the paper, see Priority input tray paper orientation on page 20.

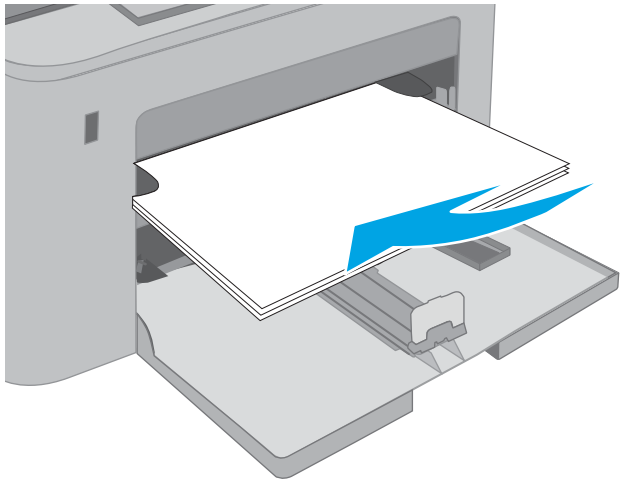

4. Adjust the paper guides so that they lightly touch the paper stack, but do not bend the paper.

   NOTE: Do not adjust the paper guides tightly against the paper stack.

   NOTE: To prevent jams, adjust the paper guides to the correct size and do not overfill the tray.

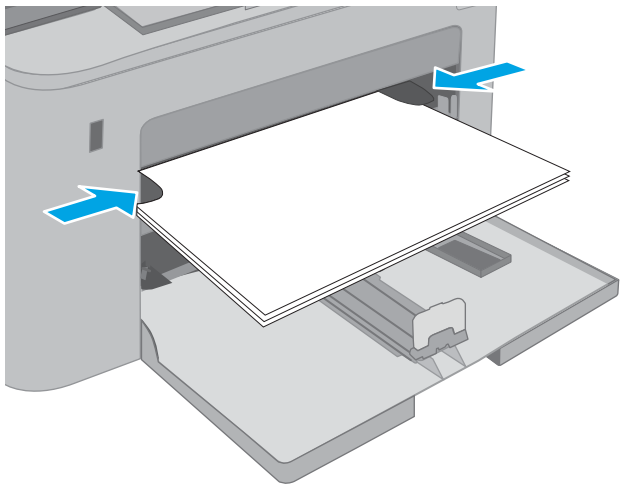

Priority input tray paper orientation

Paper type	Image orientation	Duplex mode	Paper size	How to load paper
Letterhead or Preprinted	Portrait	1-sided printing	Letter, Legal, Executive, Statement, Oficio (8.5 x 13), 4 x 6, 5 x 8, A4, A5, A6, RA5, B5 (JIS), B6 (JIS), 10 x 15 cm, Oficio (216 x 340), 16K 195 x 270 mm, 16K 184 x 260 mm, 16K 197 x 273 mm, Japanese Postcard (Postcard (JIS)), Double Japan Postcard Rotated (Double Postcard (JIS))	Face-up Top edge leading into the product 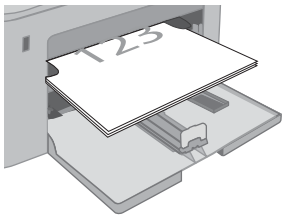
		2-sided printing	Letter, Legal, Oficio (8.5 x 13), A4	Face-up Top edge leading into the product 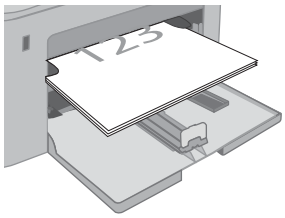
Prepunched	Portrait	1-sided printing	Letter, Legal, Executive, Statement, Oficio (8.5 x 13), 4 x 6, 5 x 8, A4, A5, A6, RA5, B5 (JIS), B6 (JIS), 10 x 15 cm, Oficio (216 x 340), 16K 195 x 270 mm, 16K 184 x 260 mm, 16K 197 x 273 mm, Japanese Postcard (Postcard (JIS)), Double Japan Postcard Rotated (Double Postcard (JIS))	Face-up Holes toward the left side of the product 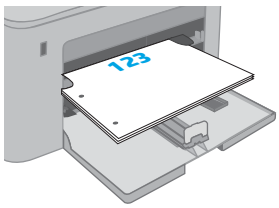
		2-sided printing	Letter, Legal, Oficio (8.5 x 13), A4	Face-up Holes toward the left side of the product 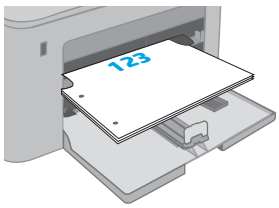

Load the Main input tray

Introduction

The following information describes how to load paper in the Main input tray. This tray holds up to 250 sheets of 75 g/m^2 (20 lb) paper.

NOTE: To avoid paper jams:

- Never add or remove paper from the Main input tray during printing.
- Before loading the tray, remove all of the paper from the input tray and straighten the stack.
- When loading the tray, do not fan the paper.
- Use paper that is not wrinkled, folded, or damaged.

1. Open the Main input tray door by grasping the handle and pulling down.

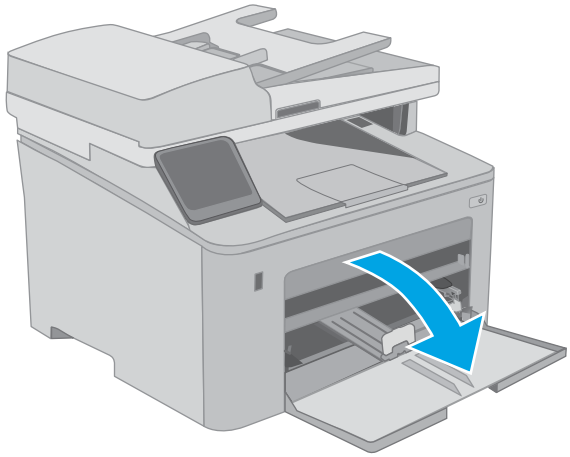

2. Adjust the paper-width guides by squeezing the adjustment latch on the right guide and sliding the guides to the size of the paper being used.

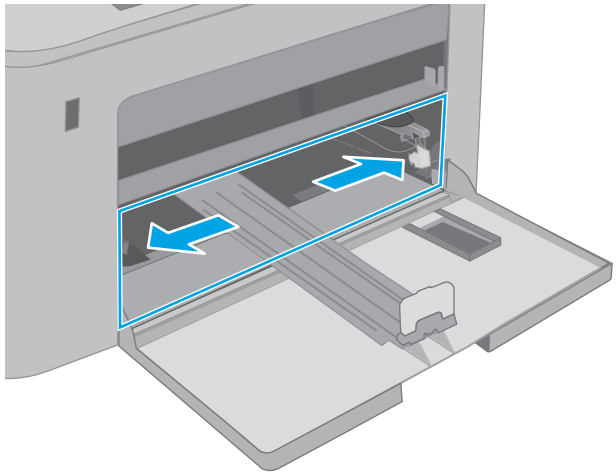

3. Adjust the paper-length guide by sliding guide to the size of the paper being used.

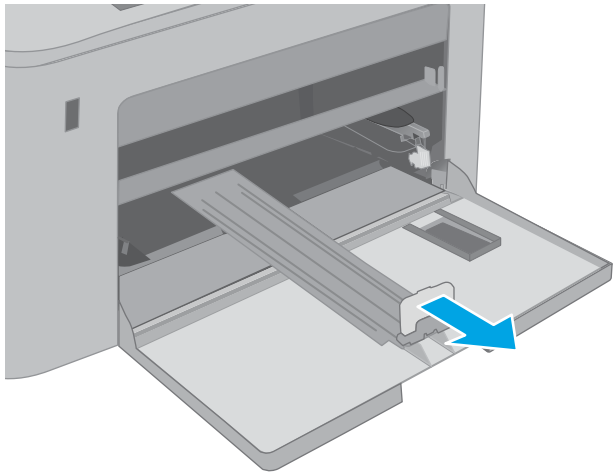

4. Load the paper into the tray. For information about how to orient the paper, see Main input tray paper orientation on page 24.

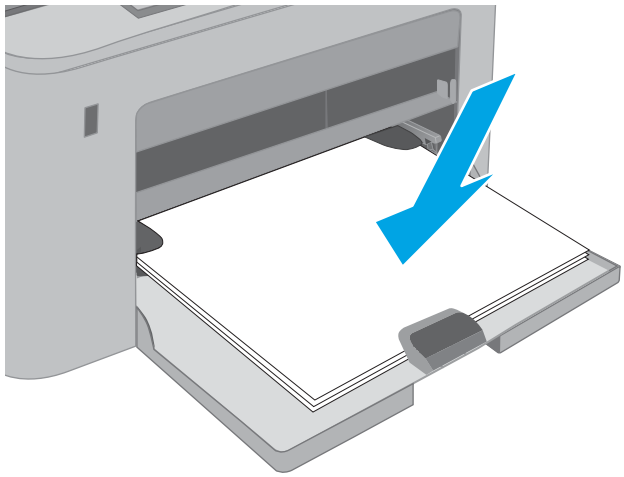

5. Adjust the guides so that they lightly touch the paper stack, but do not bend it.

   NOTE: Do not adjust the paper guides tightly against the paper stack.

   NOTE: To prevent jams, adjust the paper guides to the correct size and do not overfill the tray.

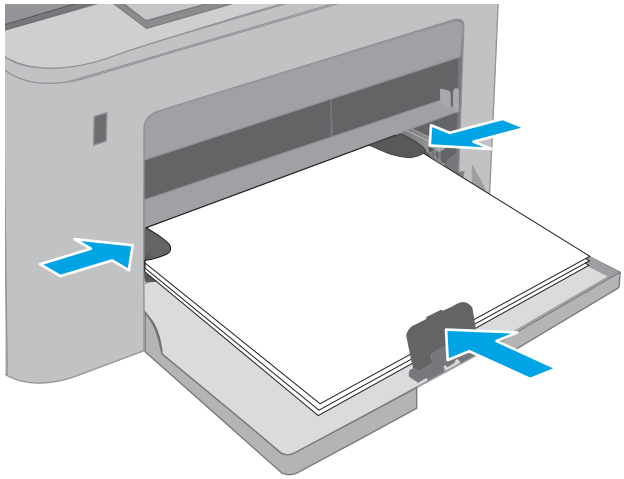

6. If the paper is A4 size, Letter-size or smaller, close the Main input tray door. Use the paper-stack window to verify that is correctly loaded.

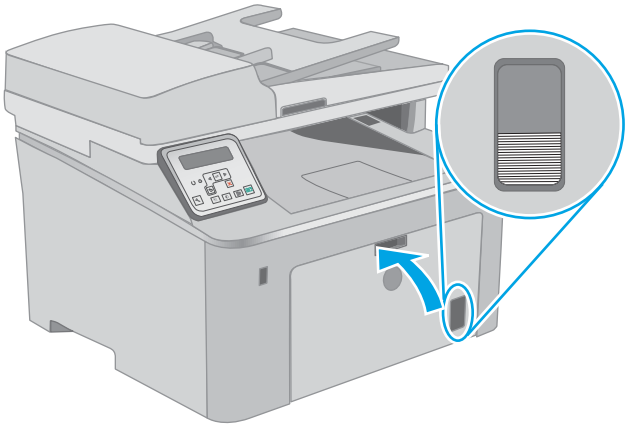

Main input tray paper orientation

Paper type	Image orientation	Duplex mode	Paper size	How to load paper
Letterhead or preprinted	Portrait	1-sided printing	Letter, Legal, Executive, Statement, Oficio (8.5 x 13), 4 x 6, 5 x 8, A4, A5, A6, RA5, B5 (JIS), B6 (JIS), 10 x 15 cm, Oficio (216 x 340), 16K 195 x 270 mm, 16K 184 x 260 mm, 16K 197 x 273 mm, Japanese Postcard (Postcard (JIS)), Double Japan Postcard Rotated (Double Postcard (JIS))	Face-up Top edge leading into the product 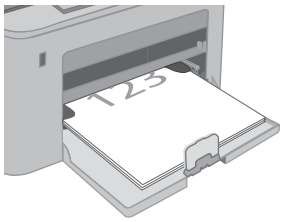
		2-sided printing	Letter, Legal, Oficio (8.5 x 13), A4	Face-up Top edge leading into the product 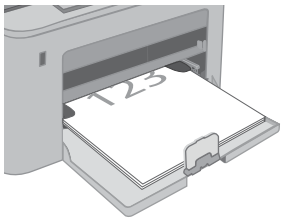
Prepunched	Portrait	1-sided printing	Letter, Legal, Executive, Statement, Oficio (8.5 x 13), 4 x 6, 5 x 8, A4, A5, A6, RA5, B5 (JIS), B6 (JIS), 10 x 15 cm, Oficio (216 x 340), 16K 195 x 270 mm, 16K 184 x 260 mm, 16K 197 x 273 mm, Japanese Postcard (Postcard (JIS)), Double Japan Postcard Rotated (Double Postcard (JIS))	Face-up Holes toward the left side of the product 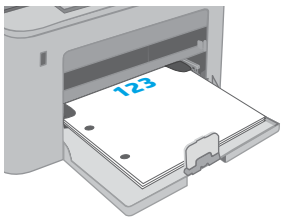
		2-sided printing	Letter, Legal, Oficio (8.5 x 13), A4	Face-up Holes toward the left side of the product 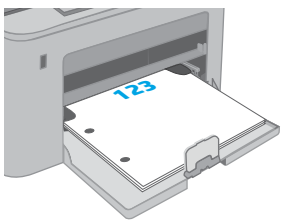

Load and print envelopes

Introduction

The following information describes how to print and load envelopes. The Priority input tray holds up to 10 envelopes. The Main input tray holds up to 10 envelopes.

To print envelopes using the manual feed option, follow these steps to select the correct settings in the print driver, and then load the envelopes into the tray after sending the print job to the printer.

Print envelopes

1. From the software program, select the **Print** option.
2. Select the printer from the list of printers, and then click or tap the **Properties** or **Preferences** button to open the print driver.

NOTE: The name of the button varies for different software programs.

NOTE: To access these features from a Windows 8 or 8.1 Start screen, select **Devices**, select **Print**, and then select the printer. For Windows 10, select **Print**, which can vary depending on the application. For Windows 8, 8.1, and 10, these applications will have a different layout with different features than what is described below for desktop applications.

3. Click or tap the **Paper/Quality** tab.
4. In the **Paper size** drop-down list, select the correct size for the envelopes.
5. In the **Paper type** drop-down list, select **Envelope**.
6. In the **Paper source** drop-down list, select **Manual feed**.
7. Click the **OK** button to close the **Document Properties** dialog box.
8. In the **Print** dialog box, click the **OK** button to print the job.

Envelope orientation

Tray	Envelope size	How to load envelopes
Priority input tray	Envelope #10, Envelope Monarch, Envelope B5, Envelope C5, Envelope DL	Face up Short, postage end leading into the printer 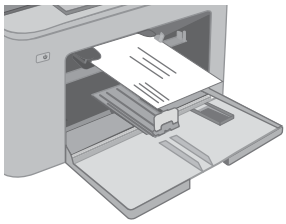
Main input tray	Envelope #10, Envelope Monarch, Envelope B5, Envelope C5, Envelope DL	Face up Short, postage end leading into the printer 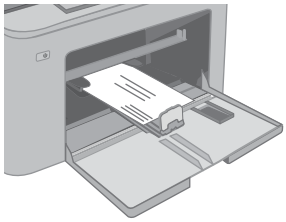

Load and print labels

Introduction

The following information describes how to print and load labels.

To print labels using the manual feed option, follow these steps to select the correct settings in the print driver, and then load the labels into the tray after sending the print job to the printer. When using manual feed, the printer waits to print the job until it detects that the tray has been opened.

Manually feed labels

1. From the software program, select the **Print** option.
2. Select the printer from the list of printers, and then click or tap the **Properties** or **Preferences** button to open the print driver.

NOTE: The name of the button varies for different software programs.

NOTE: To access these features from a Windows 8 or 8.1 Start screen, select **Devices**, select **Print**, and then select the printer. For Windows 10, select **Print**, which can vary depending on the application. For Windows 8, 8.1, and 10, these applications will have a different layout with different features than what is described below for desktop applications.

3. Click the **Paper/Quality** tab.
4. In the **Paper size** drop-down list, select the correct size for the sheets of labels.
5. In the **Paper type** drop-down list, select **Labels**.
6. In the **Paper source** drop-down list, select **Manual feed**.
7. Click the **OK** button to close the **Document Properties** dialog box.
8. In the **Print** dialog box, click the **OK** button to print the job.

Label orientation

Tray	How to load labels
Priority input tray	Face-up Top edge leading into the printer 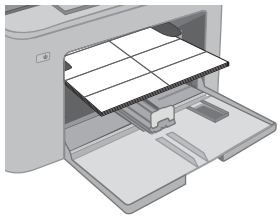
Main input tray	Face-up Top edge leading into the printer 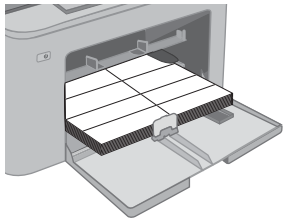

3 Supplies, accessories, and parts

- Order supplies, accessories, and parts
- Configure the HP toner-cartridge-protection supply settings
- Replace the toner cartridge
- Replace the imaging drum

For more information:

The following information is correct at the time of publication. For current information, see www.hp.com/support/ljM148MFP, www.hp.com/support/ljM227MFP.

HP's all-inclusive help for the printer includes the following information:

- Install and configure
- Learn and use
- Solve problems
- Download software and firmware updates
- Join support forums
- Find warranty and regulatory information

Order supplies, accessories, and parts

Ordering

Order supplies and paper	www.hp.com/go/suresupply
Order genuine HP parts or accessories	www.hp.com/buy/parts
Order through service or support providers	Contact an HP-authorized service or support provider.
Order using the HP Embedded Web Server (EWS)	To access, in a supported web browser on the computer, enter the printer IP address or host name in the address/URL field. The EWS contains a link to the HP SureSupply website, which provides options for purchasing Original HP supplies.

Supplies and accessories

Item	Description	Cartridge number	Part number
Supplies			
HP 30A Black LaserJet Toner Cartridge	Standard-capacity replacement black toner cartridge	30A	CF230A
HP 30X Black LaserJet Toner Cartridge	High-capacity replacement black toner cartridge	30X	CF230X
HP 31A Black LaserJet Toner Cartridge	Standard-capacity replacement black toner cartridge	31A	CF231A
HP 94A Black LaserJet Toner Cartridge	Standard-capacity replacement black toner cartridge (M148dw, M148fdw models only)	94A	CF294A
HP 94X Black LaserJet Toner Cartridge	High-capacity replacement black toner cartridge (M148dw, M148fdw models only)	94X	CF294X
HP 32A Original LaserJet Imaging Drum	Imaging drum	32A	CF232A

Customer self-repair parts

Customer Self-Repair (CSR) parts are available for many HP LaserJet printers to reduce repair time. More information about the CSR program and benefits can be found at www.hp.com/go/csr-support and www.hp.com/go/csr-faq.

Genuine HP replacement parts can be ordered at www.hp.com/buy/parts or by contacting an HP-authorized service or support provider. When ordering, one of the following will be needed: part number, serial number (found on back of printer), product number, or printer name.

- Parts listed as **Mandatory** self-replacement are to be installed by customers, unless you are willing to pay HP service personnel to perform the repair. For these parts, on-site or return-to-depot support is not provided under the HP product warranty.
- Parts listed as **Optional** self-replacement can be installed by HP service personnel at your request for no additional charge during the printer warranty period.

Item	Description	Self-replacement options	Part number
ADF replaceable film assembly	Replacement film for the document feeder	Mandatory	RM2-1185-000CN

Configure the HP toner-cartridge-protection supply settings

- Introduction
- Enable or disable the Cartridge Policy feature
- Enable or disable the Cartridge Protection feature

Introduction

Use HP Cartridge Policy and Cartridge Protection to control which cartridges are installed in the printer and protect the cartridges that are installed from theft.

- Cartridge Policy: This feature protects the printer from counterfeit toner cartridges by allowing only genuine HP cartridges to be used with the printer. Using genuine HP cartridges ensures the best possible print quality. When someone installs a cartridge that is not a genuine HP cartridge, the printer control panel displays a message that the cartridge is unauthorized and it provides information explaining how to proceed.
- Cartridge Protection: This feature permanently associates toner cartridges with a specific printer, or fleet of printers, so they cannot be used in other printers. Protecting cartridges protects your investment. When this feature is enabled, if someone attempts to transfer a protected cartridge from the original printer into an unauthorized printer, that printer will not print with the protected cartridge. The printer control panel displays a message that the cartridge is protected, and it provides information explaining how to proceed.

⚠ CAUTION: After enabling cartridge protection for the printer, all subsequent toner cartridges installed in the printer are automatically and *permanently* protected. To avoid protecting a new cartridge, disable the feature *before* installing the new cartridge.

Turning the feature off does not turn off protection for cartridges that are currently installed.

Both features are off by default. Follow these procedures to enable or disable them.

Enable or disable the Cartridge Policy feature

Use the printer control panel to enable the Cartridge Policy feature

1. Open the menus by touching or pressing the Setup button or the OK button on the printer control panel.
2. Open the following menus:
   - System Setup
   - Supply Settings
   - Cartridge Policy
3. Select Authorized HP.

Use the printer control panel to disable the Cartridge Policy feature

1. Open the menus by touching or pressing the Setup button or the OK button on the printer control panel.
2. Open the following menus:

- System Setup
- Supply Settings
- Cartridge Policy

3. Select Off.

Use the HP Embedded Web Server (EWS) to enable the Cartridge Policy feature

1. Open the HP EWS.

   a. **2-line control panels:** View the control-panel display to see the IP address.

      Touchscreen control panels: From the Home screen on the printer control panel, touch the Network button to display the IP address or host name.

   b. Open a web browser, and in the address line, type the IP address or host name exactly as it displays on the printer control panel. Press the Enter key on the computer keyboard. The EWS opens.

      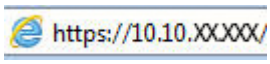

   NOTE: If the web browser displays a message indicating that accessing the website might not be safe, select the option to continue to the website. Accessing this website will not harm the computer.

2. Click the **System** tab.
3. From the left navigation pane, select **Supply Settings**.
4. From the **Cartridge Policy** drop-down list, select **Authorized HP**.
5. Click the **Apply** button.

Use the HP Embedded Web Server (EWS) to disable the Cartridge Policy feature

1. Open the HP EWS.

   a. **2-line control panels:** View the control-panel display to see the IP address.

      Touchscreen control panels: From the Home screen on the printer control panel, touch the Network button to display the IP address or host name.

   b. Open a web browser, and in the address line, type the IP address or host name exactly as it displays on the printer control panel. Press the Enter key on the computer keyboard. The EWS opens.

      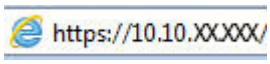

   NOTE: If the web browser displays a message indicating that accessing the website might not be safe, select the option to continue to the website. Accessing this website will not harm the computer.

2. Click the **System** tab.
3. From the left navigation pane, select **Supply Settings**.
4. From the **Cartridge Policy** drop-down menu, select **Off**.
5. Click the **Apply** button.

Troubleshoot Cartridge Policy control panel error messages

Error message	Description	Recommended action
10.30.0X Unauthorized <Color> Cartridge	The administrator has configured this printer to use only genuine HP supplies that are still under warranty. The cartridge must be replaced to continue printing.	Replace the cartridge with a genuine HP toner cartridge. If you believe you purchased a genuine HP supply, visit www.hp.com/go/anticounterfeit to determine if the toner cartridge is a genuine HP cartridge, and learn what to do if it is not a genuine HP cartridge.

Enable or disable the Cartridge Protection feature

Use the printer control panel to enable the Cartridge Protection feature

1. Open the menus by touching or pressing the Setup button or the OK button on the printer control panel.
2. Open the following menus:
   - System Setup
   - Supply Settings
   - Cartridge Protection
3. Select Protect Cartridges.
4. When the printer prompts to confirm, select Continue to enable the feature.

CAUTION: After enabling cartridge protection for the printer, all subsequent toner cartridges installed in the printer are automatically and *permanently* protected. To avoid protecting a new cartridge, disable the Cartridge Protection feature *before* installing the new cartridge.

Turning the feature off does not turn off protection for cartridges that are currently installed.

Use the printer control panel to disable the Cartridge Protection feature

1. Open the menus by touching or pressing the Setup button or the OK button on the printer control panel.
2. Open the following menus:
   - System Setup
   - Supply Settings
   - Cartridge Protection
3. Select Off.

Use the HP Embedded Web Server (EWS) to enable the Cartridge Protection feature

1. Open the HP EWS.

a. **2-line control panels:** View the control-panel display to see the IP address.

   Touchscreen control panels: From the Home screen on the printer control panel, touch the Network button to display the IP address or host name.

b. Open a web browser, and in the address line, type the IP address or host name exactly as it displays on the printer control panel. Press the Enter key on the computer keyboard. The EWS opens.

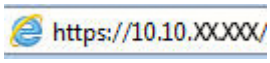

NOTE: If the web browser displays a message indicating that accessing the website might not be safe, select the option to continue to the website. Accessing this website will not harm the computer.

2. Click the **System** tab.
3. From the left navigation pane, select **Supply Settings**.
4. From the **Cartridge Protection** drop-down list, select **Protect Cartridges**.
5. Click the **Apply** button.

CAUTION: After enabling cartridge protection for the printer, all subsequent toner cartridges installed in the printer are automatically and *permanently* protected. To avoid protecting a new cartridge, disable the Cartridge Protection feature *before* installing the new cartridge.

Turning the feature off does not turn off protection for cartridges that are currently installed.

Use the HP Embedded Web Server (EWS) to disable the Cartridge Protection feature

1. Open the HP EWS.

   a. **2-line control panels:** View the control-panel display to see the IP address.

      Touchscreen control panels: From the Home screen on the printer control panel, touch the Network button to display the IP address or host name.

   b. Open a web browser, and in the address line, type the IP address or host name exactly as it displays on the printer control panel. Press the Enter key on the computer keyboard. The EWS opens.

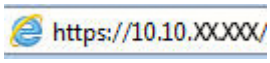

   NOTE: If the web browser displays a message indicating that accessing the website might not be safe, select the option to continue to the website. Accessing this website will not harm the computer.

2. Click the **System** tab.
3. From the left navigation pane, select **Supply Settings**.
4. From the **Cartridge Protection** drop-down list, select **Off**.
5. Click the **Apply** button.

Troubleshoot Cartridge Protection control panel error messages

Error message	Description	Recommended action
10.57.0X Protected <Color> Cartridge	The cartridge can only be used in the printer or fleet of printers that initially protected it using HP Cartridge Protection. The Cartridge Protection feature allows an administrator to restrict cartridges to work in only one printer or fleet of printers. The cartridge must be replaced to continue printing.	Replace the cartridge with a new toner cartridge.

Replace the toner cartridge

- Introduction
- Toner-cartridge information
- Remove and replace the toner cartridge

Introduction

The following information provides details about the toner cartridge for the printer, and it includes instructions to replace it.

Toner-cartridge information

This printer indicates when the toner cartridge level is low. The actual toner cartridge life remaining can vary. Consider having a replacement cartridge available to install when print quality is no longer acceptable.

To purchase cartridges or check cartridge compatibility for the printer, go to HP SureSupply at www.hp.com/go/suresupply. Scroll to the bottom of the page and verify that the country/region is correct.

Item	Description	Cartridge number	Part number
HP 30A Black LaserJet Toner Cartridge	Standard-capacity replacement black toner cartridge	30A	CF230A
HP 30X Black LaserJet Toner Cartridge	High-capacity replacement black toner cartridge	30X	CF230X
HP 31A Black LaserJet Toner Cartridge	Standard-capacity replacement black toner cartridge	31A	CF231A
HP 94A Black LaserJet Toner Cartridge	Standard-capacity replacement black toner cartridge (M148dw, M148fdw models only)	94A	CF294A
HP 94X Black LaserJet Toner Cartridge	High-capacity replacement black toner cartridge (M148dw, M148fdw models only)	94X	CF294X

NOTE: High-yield toner cartridges contain more toner than standard cartridges for increased page yield. For more information, go to www.hp.com/go/learnaboutsupplies.

Do not remove the toner cartridge from its package until it is time to replace it.

CAUTION: To prevent damage to the toner cartridge, do not expose it to light for more than a few minutes.

The following illustration shows the toner-cartridge components.

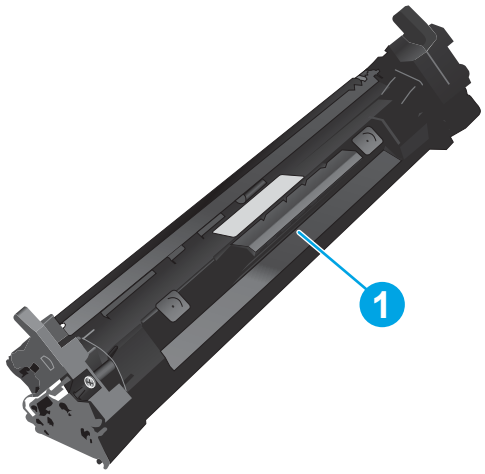

1	Toner cartridge

CAUTION: If toner gets on clothing, wipe it off by using a dry cloth and wash the clothes in cold water. Hot water sets toner into fabric.

NOTE: Information about recycling used toner cartridges is in the toner-cartridge box.

Remove and replace the toner cartridge

1. Lift the scanner assembly.

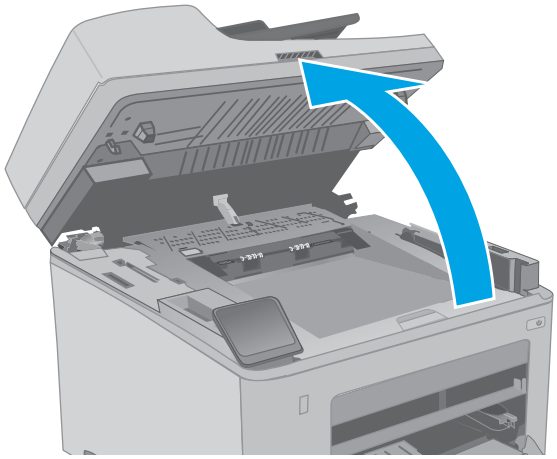

2. Open the cartridge door.

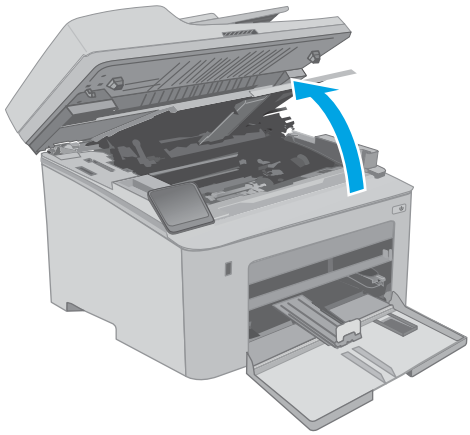

3. Remove the used toner cartridge from the printer.

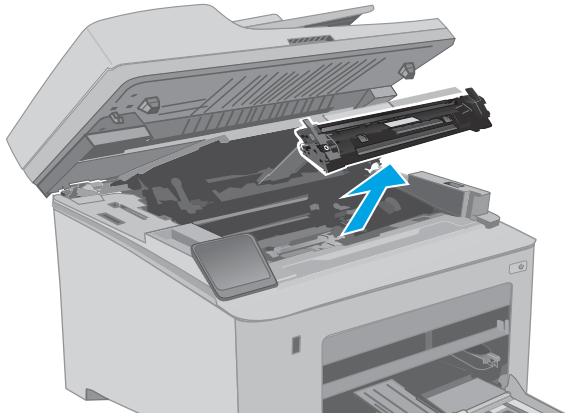

4. Remove the new-toner cartridge package from the box, and then pull the release tab on the packaging.

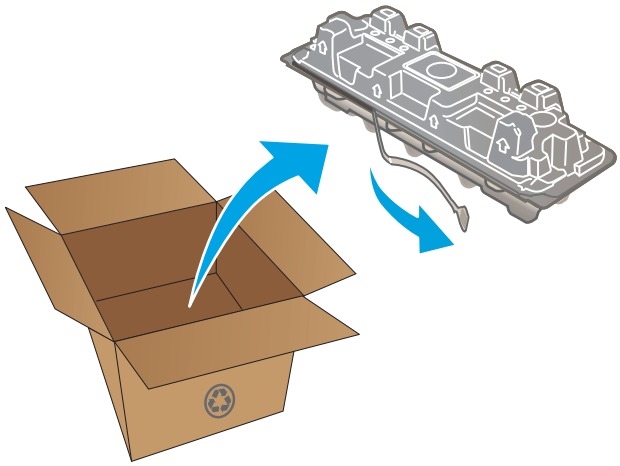

5. Remove the new toner cartridge from the opened packaging shell. Place the used toner cartridge in the shell for recycling.

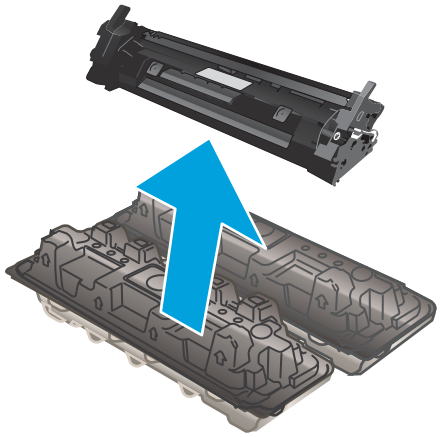

6. Align the new toner cartridge with the tracks inside the printer, and install the new toner cartridge until it is firmly seated.

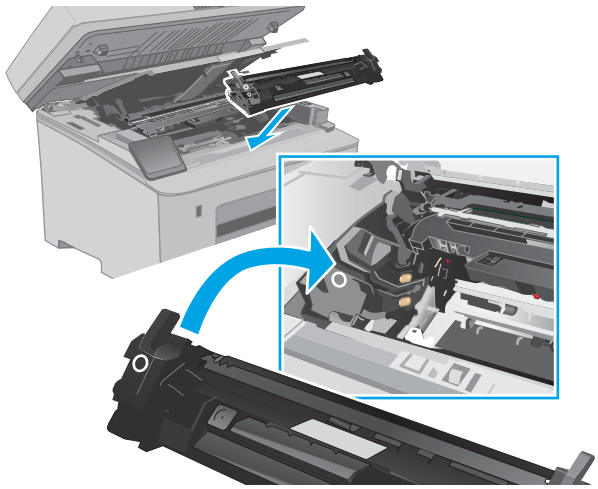

7. Close the cartridge door.

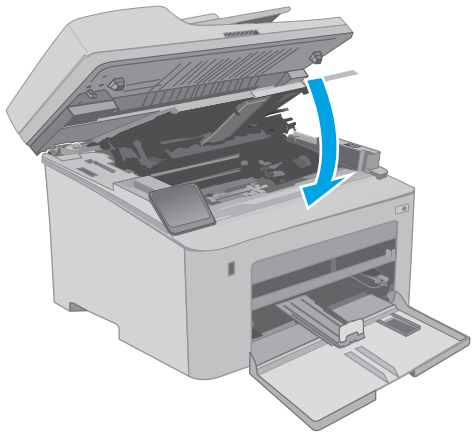

8. Lower the scanner assembly.

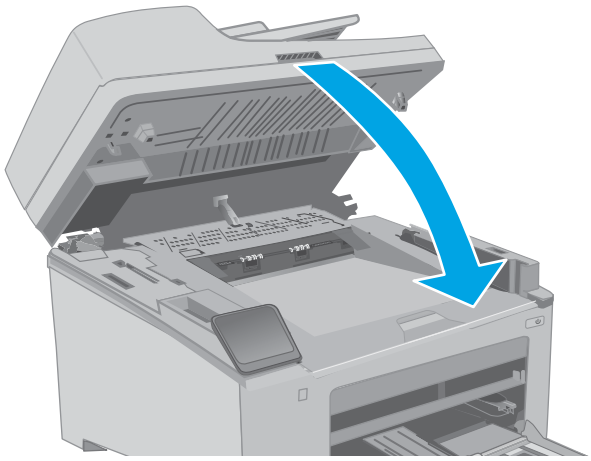

Replace the imaging drum

- Introduction
- Imaging drum information
- Remove and replace the imaging drum

Introduction

The following information provides details about the imaging drum for the printer, and it includes instructions to replace it.

Imaging drum information

This printer indicates when the imaging drum needs to be replaced. The actual imaging drum life remaining can vary. Consider having a replacement imaging drum available to install when print quality is no longer acceptable.

To purchase imaging drums for the printer, go to HP SureSupply at www.hp.com/go/suresupply. Scroll to the bottom of the page and verify that the country/region is correct.

Item	Description	Cartridge number	Part number
HP 32A Original LaserJet Imaging Drum	Replacement imaging drum	32A	CF232A

Do not remove the imaging drum from its package until it is time to replace it.

⚠ CAUTION: To prevent damage to the imaging drum, do not expose it to light for more than a few minutes. Cover the imaging drum if it must be removed from the printer for an extended period of time.

The following illustration shows the imaging-drum components.

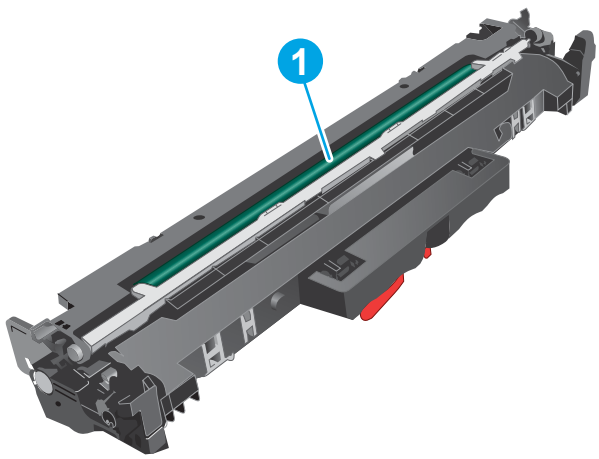

1	Imaging drum CAUTION: Do not touch the imaging drum. Fingerprints can cause print-quality problems.	

Information about recycling used imaging drums is in the imaging-drum box.

Remove and replace the imaging drum

1. Lift the scanner assembly.

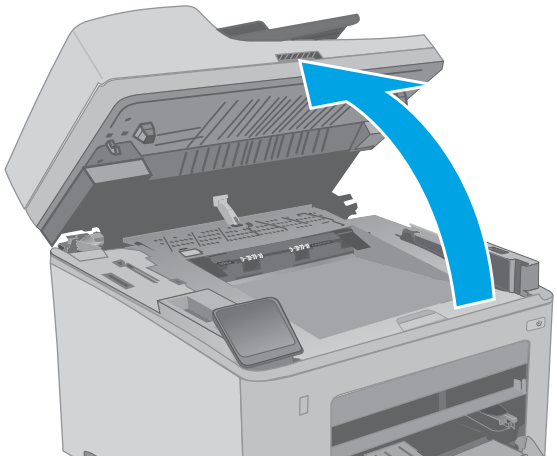

2. Open the cartridge door.

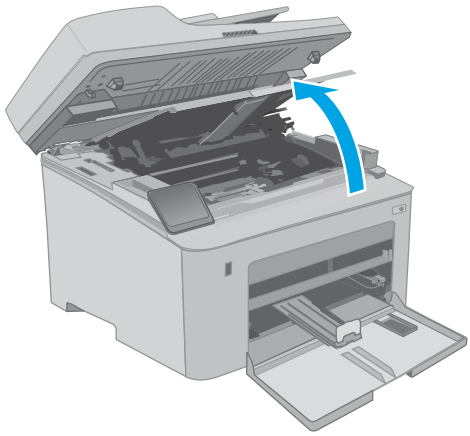

3. Temporarily remove the toner cartridge from the printer.

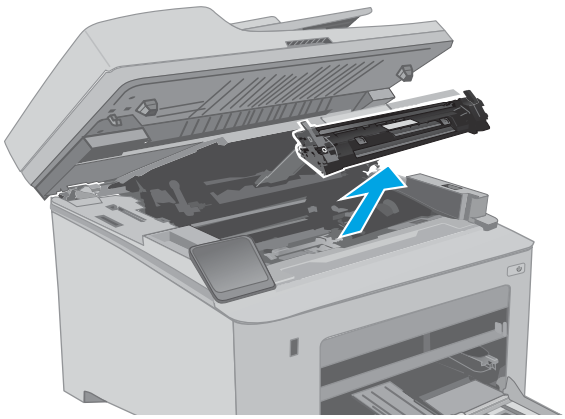

4. Remove the used imaging drum from the printer.

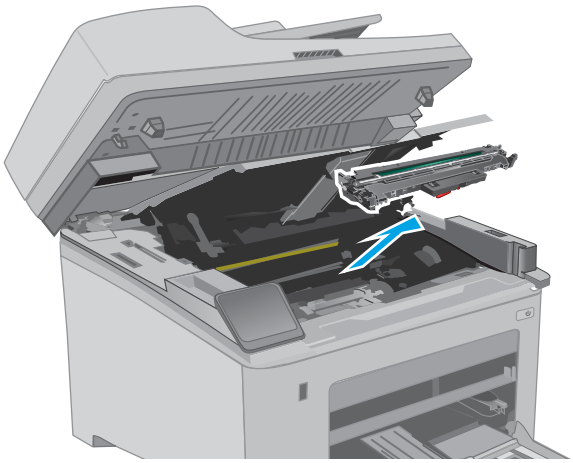

5. Remove the new imaging drum package from the box, and then release the packaging.

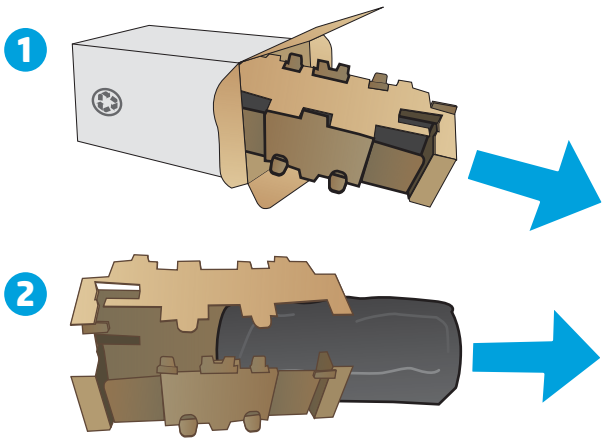

6. Remove the new imaging-drum package from the package.

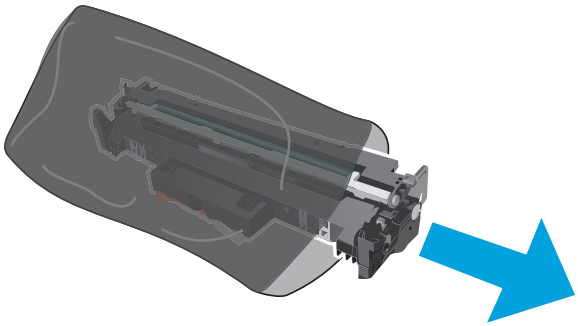

7. Do not touch the imaging drum. Fingerprints on the imaging drum can cause print-quality problems.

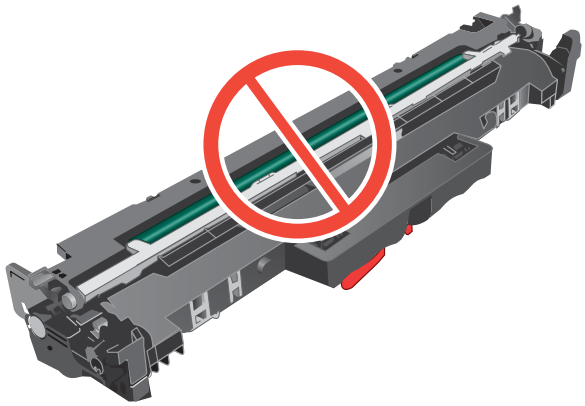

8. Align the new imaging drum with the tracks inside the printer, and install the new imaging drum until it is firmly seated.

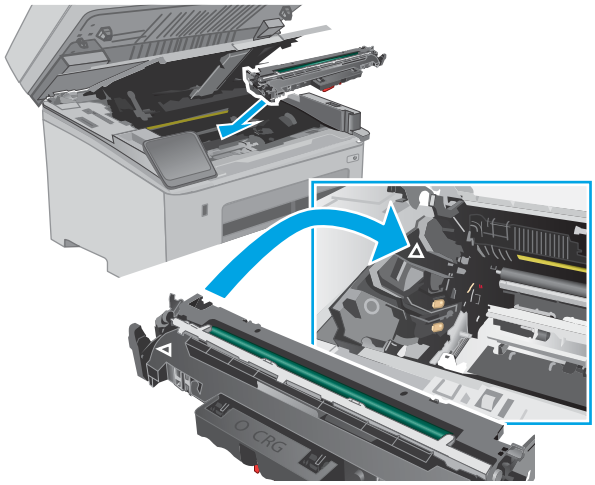

9. Align the toner cartridge with the tracks inside the printer, and install the toner cartridge until it is firmly seated.

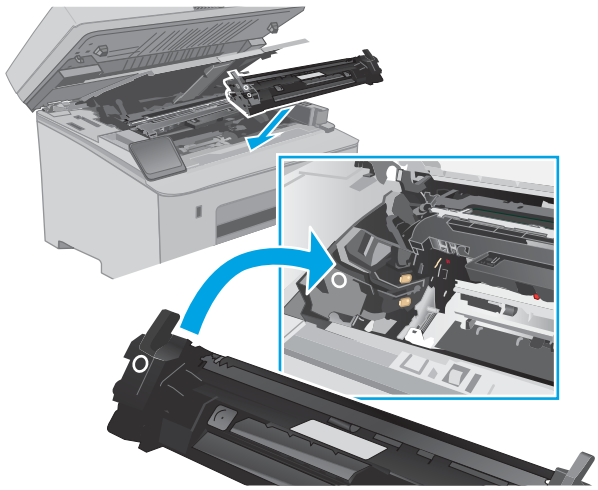

10. Close the cartridge door.

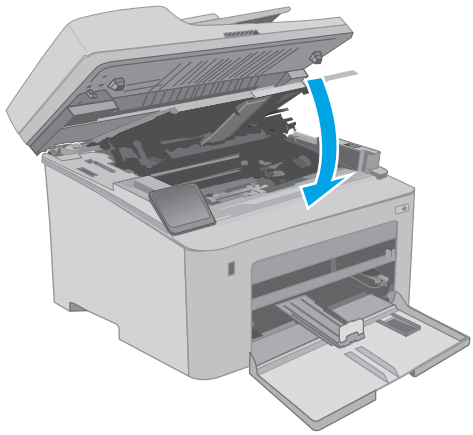

11. Lower the scanner assembly.

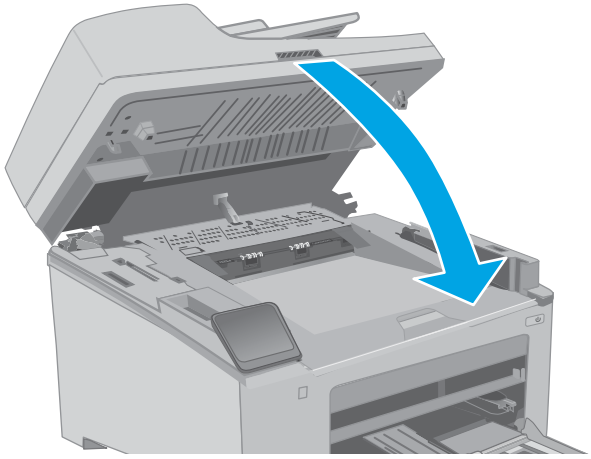

4 Print

- Print tasks (Windows)
- Print tasks (OS X)
- Mobile printing
- Use walk-up USB printing (touchscreen models only)

For more information:

The following information is correct at the time of publication. For current information, see www.hp.com/support/ljM148MFP, www.hp.com/support/ljM227MFP.

HP's all-inclusive help for the printer includes the following information:

- Install and configure
- Learn and use
- Solve problems
- Download software and firmware updates
- Join support forums
- Find warranty and regulatory information

Print tasks (Windows)

How to print (Windows)

The following procedure describes the basic printing process for Windows.

1. From the software program, select the **Print** option.
2. Select the printer from the list of printers. To change settings, click the **Properties** or **Preferences** button to open the print driver.

NOTE: The name of the button varies for different software programs.

NOTE: In Windows 10, 8.1, and 8, these applications will have a different layout with different features from what is described below for desktop applications. To access the print feature from a Start screen app, complete the following steps:

- **Windows 10:** Select **Print**, and then select the printer.
- **Windows 8.1 or 8:** Select **Devices**, select **Print**, and then select the printer.

NOTE: For more information, click the Help (?) button in the print driver.

3. Click the tabs in the print driver to configure the available options. For example, set the paper orientation on the **Finishing** tab, and set the paper source, paper type, paper size, and quality settings on the **Paper/Quality** tab.
4. Click the **OK** button to return to the **Print** dialog box. Select the number of copies to print from this screen.
5. Click the **Print** button to print the job.

Automatically print on both sides (Windows)

Use this procedure for printers that have an automatic duplexer installed. If the printer does not have an automatic duplexer installed, or to print on paper types that the duplexer does not support, print on both sides manually.

1. From the software program, select the **Print** option.
2. Select the printer from the list of printers, and then click the **Properties** or **Preferences** button to open the print driver.

NOTE: The name of the button varies for different software programs.

NOTE: In Windows 10, 8.1, and 8, these applications will have a different layout with different features from what is described below for desktop applications. To access the print feature from a Start screen app, complete the following steps:

- **Windows 10:** Select **Print**, and then select the printer.
- **Windows 8.1 or 8:** Select **Devices**, select **Print**, and then select the printer.

3. Click the **Finishing** tab.
4. Select **Print on both sides**. Click **OK** to close the **Document Properties** dialog.
5. In the **Print** dialog, click **Print** to print the job.

Manually print on both sides (Windows)

Use this procedure for printers that do not have an automatic duplexer installed or to print on paper that the duplexer does not support.

1. From the software program, select the **Print** option.
2. Select the printer from the list of printers, and then click the **Properties** or **Preferences** button to open the print driver.

NOTE: The name of the button varies for different software programs.

NOTE: In Windows 10, 8.1, and 8, these applications will have a different layout with different features from what is described below for desktop applications. To access the print feature from a Start screen app, complete the following steps:

- **Windows 10:** Select **Print**, and then select the printer.
- **Windows 8.1 or 8:** Select **Devices**, select **Print**, and then select the printer.

3. Click the **Finishing** tab.
4. Select **Print on both sides (manually)**, and then click **OK** to close the **Document Properties** dialog.
5. In the **Print** dialog, click **Print** to print the first side of the job.
6. Retrieve the printed stack from the output bin, and place it in Tray 1.
7. If prompted, select the appropriate control panel button to continue.

Print multiple pages per sheet (Windows)

1. From the software program, select the **Print** option.
2. Select the printer from the list of printers, and then click the **Properties** or **Preferences** button to open the print driver.

NOTE: The name of the button varies for different software programs.

NOTE: In Windows 10, 8.1, and 8, these applications will have a different layout with different features from what is described below for desktop applications. To access the print feature from a Start screen app, complete the following steps:

- **Windows 10:** Select **Print**, and then select the printer.
- **Windows 8.1 or 8:** Select **Devices**, select **Print**, and then select the printer.

3. Click the **Finishing** tab.
4. Select the number of pages per sheet from the **Pages per sheet** drop-down list.
5. Select the correct **Print page borders**, **Page order**, and **Orientation** options. Click **OK** to close the **Document Properties** dialog.
6. In the **Print** dialog, click **Print** to print the job.

Select the paper type (Windows)

1. From the software program, select the **Print** option.
2. Select the printer from the list of printers, and then click the **Properties** or **Preferences** button to open the print driver.

NOTE: The name of the button varies for different software programs.

NOTE: In Windows 10, 8.1, and 8, these applications will have a different layout with different features from what is described below for desktop applications. To access the print feature from a Start screen app, complete the following steps:

- **Windows 10:** Select **Print**, and then select the printer.
- **Windows 8.1 or 8:** Select **Devices**, select **Print**, and then select the printer.

3. Click the **Paper/Quality** tab.
4. Select the paper type from the **Paper type** drop-down list.
5. Click **OK** to close the **Document Properties** dialog. In the **Print** dialog, click **Print** to print the job.

   If the tray needs to be configured, a tray configuration message displays on the printer control panel.
6. Load the tray with the specified type and size of paper, and then close the tray.
7. Select the OK button to accept the detected type and size, or select the Modify button to choose a different paper size or type.
8. Select the correct type and size, and then select the OK button.

Additional print tasks

Go to www.hp.com/support/ljM148MFP, www.hp.com/support/ljM227MFP.

Instructions are available for performing specific print tasks, such as the following:

- Create and use printing shortcuts or presets
- Select the paper size, or use a custom paper size
- Select the page orientation
- Create a booklet
- Scale a document to fit a specific paper size
- Print the first or last pages of the document on different paper
- Print watermarks on a document

Print tasks (OS X)

How to print (OS X)

The following procedure describes the basic printing process for OS X.

1. Click the **File** menu, and then click the **Print** option.
2. Select the printer.
3. Click **Show Details** or **Copies & Pages**, and then select other menus to adjust the print settings.

   NOTE: The name of the item varies for different software programs.

4. Click the **Print** button.

Automatically print on both sides (OS X)

NOTE: This information applies to printers that include an automatic duplexer.

NOTE: This feature is available if you install the HP print driver. It might not be available if you are using AirPrint.

1. Click the **File** menu, and then click the **Print** option.
2. Select the printer.
3. Click **Show Details** or **Copies & Pages**, and then click the **Layout** menu.

   NOTE: The name of the item varies for different software programs.

4. Select a binding option from the **Two-Sided** drop-down list.
5. Click the **Print** button.

Manually print on both sides (OS X)

NOTE: This feature is available if you install the HP print driver. It might not be available if you are using AirPrint.

1. Click the **File** menu, and then click the **Print** option.
2. Select the printer.
3. Click **Show Details** or **Copies & Pages**, and then click the **Manual Duplex** menu.

   NOTE: The name of the item varies for different software programs.

4. Click the **Manual Duplex** box, and select a binding option.
5. Click the **Print** button.
6. Go to the printer, and remove any blank paper that is in Tray 1.
7. Retrieve the printed stack from the output bin and place it with the printed-side facing down in the input tray.
8. If prompted, touch the appropriate control panel button to continue.

Print multiple pages per sheet (OS X)

1. Click the **File** menu, and then click the **Print** option.
2. Select the printer.
3. Click **Show Details** or **Copies & Pages**, and then click the **Layout** menu.

NOTE: The name of the item varies for different software programs.

4. From the **Pages per Sheet** drop-down list, select the number of pages that you want to print on each sheet.
5. In the **Layout Direction** area, select the order and placement of the pages on the sheet.
6. From the **Borders** menu, select the type of border to print around each page on the sheet.
7. Click the **Print** button.

Select the paper type (OS X)

1. Click the **File** menu, and then click the **Print** option.
2. Select the printer.
3. Click **Show Details** or **Copies & Pages**, and then click the **Media & Quality** menu or the **Paper/Quality** menu.

NOTE: The name of the item varies for different software programs.

4. Select from the **Media & Quality** or **Paper/Quality** options.

NOTE: This list contains the master set of options available. Some options are not available on all printers.

- **Media Type**: Select the option for the type of paper for the print job.
- **Print Quality**: Select the resolution level for the print job.
- **Edge-To-Edge Printing**: Select this option to print close to the paper edges.
- **EconoMode**: Select this option to conserve toner when printing drafts of documents.

5. Click the **Print** button.

Additional print tasks

Go to www.hp.com/support/ljM148MFP, www.hp.com/support/ljM227MFP.

Instructions are available for performing specific print tasks, such as the following:

- Create and use printing shortcuts or presets
- Select the paper size, or use a custom paper size
- Select the page orientation
- Create a booklet
- Scale a document to fit a specific paper size
- Print the first or last pages of the document on different paper
- Print watermarks on a document

Mobile printing

Introduction

HP offers multiple mobile and ePrint solutions to enable easy printing to an HP printer from a laptop, tablet, smartphone, or other mobile device. To see the full list and to determine the best choice, go to www.hp.com/go/LaserJetMobilePrinting.

NOTE: Update the printer firmware to ensure all mobile printing and ePrint capabilities are supported.

- Wi-Fi Direct (wireless models only)
- HP ePrint via email
- HP ePrint software
- AirPrint
- Android embedded printing

Wi-Fi Direct (wireless models only)

Wi-Fi Direct enables printing from a wireless mobile device without requiring a connection to a network or the Internet. .

Not all mobile operating systems are currently supported by Wi-Fi Direct. If the mobile device does not support Wi-Fi Direct, you must change the wireless network connection of the device to the Wi-Fi Direct connection of the printer before printing.

NOTE: For non-Wi-Fi Direct capable mobile devices, the Wi-Fi Direct connection only enables printing. After using Wi-Fi Direct to print, you must reconnect to a local network in order to access the Internet.

To access to the printer Wi-Fi Direct connection, complete the following steps:

2-line control panels:

1. On the printer control panel, press the Setup button.
2. Open the following menus:
   - Network Setup
   - Wireless Menu
   - Wi-Fi Direct
3. Choose one of the following connection methods:
   - Automatic: Choosing this option sets the password to 12345678.
   - Manual: Choosing this option generates a secure, randomly generated password.
4. On the mobile device, open the **Wi-Fi** or **Wi-Fi Direct** menu.
5. From the list of available networks, select the printer name.

NOTE: If the printer name does not display, you might be out of range of the Wi-Fi Direct signal. Move the device closer to the printer.

6. If prompted, enter the Wi-Fi Direct password, or select OK on the printer control panel.

NOTE: For Android devices that support Wi-Fi Direct, if the connection method is set to **Automatic**, the connection will occur automatically, without a password prompt. If the connection method is set to **Manual**, you will need to either press the OK button, or provide a personal identification number (PIN) — displayed on the printer control panel — as a password on the mobile device.

7. Open the document, and then select the **Print** option.

NOTE: If the mobile device does not support printing, install the HP ePrint mobile app.

8. Select the printer from the list of available printers, and then select **Print**.
9. After the print job is complete, some mobile devices need to be reconnected to the local network.

Touchscreen control panels:

1. From the Home screen on the printer control panel, touch the Connection Information button.
2. Open the following menus:
   - Wi-Fi Direct
   - Settings
   - Connection Method
3. Choose one of the following connection methods:
   - Automatic: Choosing this option sets the password to 12345678.
   - Manual: Choosing this option generates a secure, randomly generated password.
4. On the mobile device, open the **Wi-Fi** or the **Wi-Fi Direct** menu.
5. From the list of available networks, select the printer name.

NOTE: If the printer name does not display, you might be out of range of the Wi-Fi Direct signal. Move the device closer to the printer.

6. If prompted, enter the Wi-Fi Direct password.

NOTE: For Android devices that support Wi-Fi Direct, if the connection method is set to **Automatic**, the connection will occur automatically, without a password prompt. If the connection method is set to **Manual**, you will need to either press the OK button, or provide a personal identification number (PIN) — displayed on the printer control panel — as a password on the mobile device.

NOTE: To access the Wi-Fi Direct password, from Home screen on the printer control panel, touch the Connection Information button.

7. Open the document, and then select the **Print** option.

NOTE: If the mobile device does not support printing, install the HP ePrint mobile app.

8. Select the printer from the list of available printers, and then select **Print**.
9. After the print job is complete, some mobile devices need to be reconnected to the local network.

- Android 4.0 and later tablets and phones with the HP Print Service or Mopria mobile printing plugin installed
- Most Windows 8.1 computers, tablets, and laptops that have the HP print driver installed

The following devices and computer operating systems do not support **Wi-Fi Direct**, but can print to a printer that does:

- Apple iPhone and iPad
- Mac computers running OS X

For more information on Wi-Fi Direct printing, go to www.hp.com/go/wirelessprinting.

Enable or disable Wi-Fi Direct

Wi-Fi Direct capabilities must be enabled first from the printer control panel.

1. **2-line control panels**: On the printer control panel, press the Setup button, and then open the **Network Setup** menu.

   Touchscreen control panels: From the Home screen on the printer control panel, select the Connection Information button.

2. Open the following menus:
   - Wi-Fi Direct
   - Settings
   - On/Off
3. Touch the On menu item. Touching the Off button disables Wi-Fi Direct printing.

NOTE: In environments where more than one model of the same printer is installed, it might be helpful to provide each printer a unique Wi-Fi Direct name for easier printer identification for Wi-Fi Direct printing. The Wi-Fi Direct Name is also available by touching the Connection Information icon from the Home screen on the printer control panel, and then touching the Wi-Fi Direct icon.

Change the printer Wi-Fi Direct name

Follow this procedure to change the printer Wi-Fi Direct name using the HP Embedded Web Server (EWS):

Step one: Open the HP Embedded Web Server

1. **2-line control panels**: On the printer control panel, press the Setup button. Open the **Network Setup** menu, and then select **Show IP Address** to display the IP address or host name.

   Touchscreen control panels: From the Home screen on the printer control panel, touch the Connection Information button, and then touch the Network Connected button or the Network Wi-Fi ON button to display the IP address or host name.

2. Open a web browser, and in the address line, type the IP address or host name exactly as it displays on the printer control panel. Press the Enter key on the computer keyboard. The EWS opens.

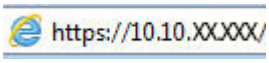

NOTE: If the web browser displays a message indicating that accessing the website might not be safe, select the option to continue to the website. Accessing this website will not harm the computer.

Step two: Change the Wi-Fi Direct name

1. Click the **Networking** tab.
2. On the left navigation pane, click the **Wi-Fi Direct Setup** link.
3. In the **Wi-Fi Direct Name** field, enter the new name.
4. Click **Apply**.

HP ePrint via email

Use HP ePrint to print documents by sending them as an email attachment to the printer's email address from any email-enabled device.

To use HP ePrint, the printer must meet these requirements:

- The printer must be connected to a wired or wireless network and have Internet access.
- HP Web Services must be enabled on the printer, and the printer must be registered with HP Connected.

  Follow this procedure to enable HP Web Services and register with HP Connected:

NOTE: The steps vary according to the type of control panel.

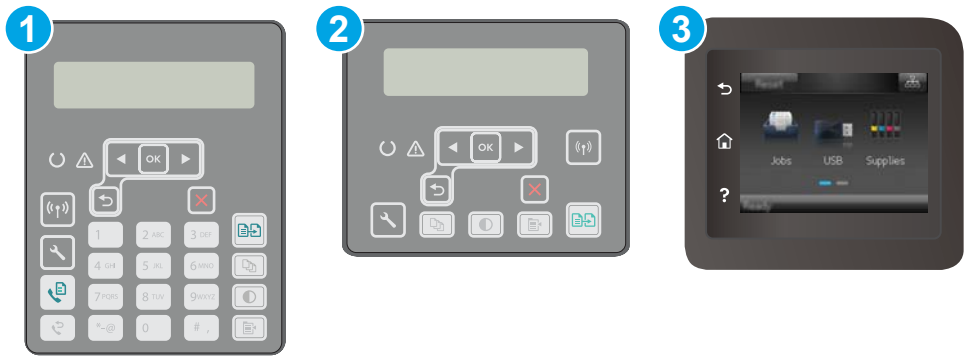

1	2-line control panel (fax models)
2	2-line control panel
3	Touchscreen control panel

2-line control panels

1. On the printer control panel, press the Setup button. Open the **Network Setup** menu, and then select **Show IP Address** to display the IP address or host name.

2. Open a web browser, and in the address line, type the IP address or host name exactly as it displays on the printer control panel. Press the Enter key on the computer keyboard. The EWS opens.

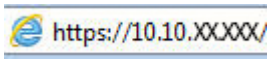

NOTE: If the web browser displays a message indicating that accessing the website might not be safe, select the option to continue to the website. Accessing this website will not harm the computer.

3. Click the **HP Web Services** tab, and then click **Enable**. The printer enables Web Services, and then prints an information page.

   The information page contains the printer code necessary to register the HP printer at HP Connected.

4. Go to www.hpconnected.com to create an HP ePrint account and complete the setup process.

Touchscreen control panels:

1. From the Home screen on the printer control panel, touch the Connection Information button.
2. Open the following menus:
   - HP ePrint
   - Settings
   - Enable Web Services
3. Touch the Print button to read the terms of use agreement. Touch the OK button to accept the terms of use and enable HP Web Services

   The printer enables Web Services, and then prints an information page. The information page contains the printer code that necessary to register the HP printer at HP Connected.

4. Go to www.hpconnected.com to create an HP ePrint account and complete the setup process.

HP ePrint software

The HP ePrint software makes it easy to print from a Windows desktop or laptop computer to any HP ePrint-capable printer. This software makes it easy to find HP ePrint-enabled printers that are registered to your HP Connected account. The target HP printer can be located in the office or at locations across the globe.

HP ePrint software supports the following types of printing:

- TCP/IP printing to local network printers on the network (LAN or WAN) to products that support UPD PostScript®
- IPP printing to LAN or WAN network-connected products that support ePCL
- Printing PDF documents to public print locations and printing using HP ePrint via email through the cloud

NOTE: HP ePrint Software does not support USB printing.

How to get started

1. Go to www.hp.com/go/eprintsoftware for drivers and information.

NOTE: For Windows, the name of the HP ePrint Software print driver is HP ePrint + JetAdvantage.

2. After installing the software, open the **Print** option from within your application, and then select **HP ePrint** from the installed printers list. Click the **Properties** button to configure print options.

AirPrint

Direct printing using Apple's AirPrint is supported for iOS and from Mac computers running macOS 10.13 and newer. Use AirPrint to print directly to the printer from an iPad, iPhone (3GS or later), or iPod touch (third generation or later) in the following mobile applications:

- Mail
- Photos
- Safari
- iBooks
- Select third-party applications

To use AirPrint, the printer must be connected to the same network (sub-net) as the Apple device. For more information about using AirPrint and about which HP printers are compatible with AirPrint, go to www.hp.com/go/LaserJetMobilePrinting.

NOTE: Before using AirPrint with a USB connection, verify the version number. AirPrint versions 1.3 and earlier do not support USB connections.

Android embedded printing

HP's built-in print solution for Android and Kindle enables mobile devices to automatically find and print to HP printers that are either on a network or within wireless range for Wi-Fi Direct printing.

The printer must be connected to the same network (sub-net) as the Android device.

The print solution is built into the many versions of the operating system.

NOTE: If printing is not available on your device, go to the Google Play > Android apps and install the HP Print Service Plugin.

For more information on how to use Android embedded printing and which Android devices are supported, go to www.hp.com/go/LaserJetMobilePrinting.

Use walk-up USB printing (touchscreen models only)

Introduction

This printer features walk-up USB printing, for quickly printing files without sending them from a computer. The printer accepts standard USB flash drives in the USB port. It supports the following types of files:

- .pdf
- .jpg
- .prn and .PRN
- .cht and .CHT
- .pxl
- .pcl and .PCL
- .ps and .PS

Step one: Access USB files on the printer

1. Insert the USB flash drive into the walk-up USB port on the printer.
2. The USB Flash Drive menu opens with the following options:
   - Print Documents
   - View and Print Photos
   - Scan to USB Drive

Step two: Print USB documents

Option one: Print documents

1. To print a document, select Print Documents.
2. Select the name of the document to print. If the document is stored in a folder, select the folder first, and then select the document to print.
3. When the summary screen opens, the following settings can be adjusted:
   - Number of Copies
   - Paper Size
   - Paper Type
   - Fit to Page
   - Collation
   - Output Color (color printers only)
4. Select Print to print the document.
5. Retrieve the printed job from the output bin, and remove the USB flash drive.

Option two: Print photos

1. To print photos, select View and Print Photos.
2. Select the preview image of each photo to be printed, and then select Done.
3. When the summary screen opens, the following settings can be adjusted:
   - Image Size
   - Paper Size
   - Paper Type
   - Number of Copies
   - Output Color (color printers only)
   - Lighter/Darker
4. Select Print to print the photos.
5. Retrieve the printed job from the output bin, and remove the USB flash drive.

5 Copy

- Make a copy
- Copy on both sides (duplex)
- Additional copy tasks

For more information:

The following information is correct at the time of publication. For current information, see www.hp.com/support/ljM148MFP, www.hp.com/support/ljM227MFP.

HP's all-inclusive help for the printer includes the following information:

- Install and configure
- Learn and use
- Solve problems
- Download software and firmware updates
- Join support forums
- Find warranty and regulatory information

Make a copy

NOTE: The steps vary according to the type of control panel.

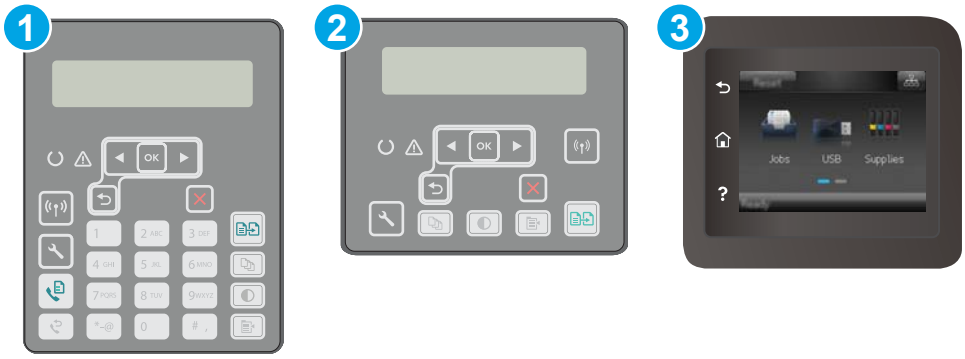

1	2-line control panel (fax models)
2	2-line control panel
3	Touchscreen control panel

2-line control panels:

1. Load the document on the scanner glass according to the indicators on the printer.
2. Press the Copy Menu button.
3. To optimize copy quality for different types of documents, use the arrow keys to select the **Optimize** menu, and then press the OK button. The following copy-quality settings are available:
   - **Auto Select**: Use this setting when you are not concerned about the quality of the copy. This is the default setting.
   - **Mixed**: Use this setting for documents that contain a mixture of text and graphics.
   - **Text**: Use this setting for documents that contain mostly text.
   - **Picture**: Use this setting for documents that contain mostly graphics.
4. Press the Number of Copies button, and then use the arrow keys to adjust the number of copies. Press the OK button.
5. Press the Start Copy button to start copying.

Touchscreen control panels:

1. Load the document on the scanner glass according to the indicators on the printer.
2. From the Home screen on the printer control panel, touch the Copy icon.
3. To optimize copy quality for different types of documents, touch the Settings button, and then scroll to and touch the Optimize button. Swipe the control panel screen to scroll through the options, and then touch an option to select it. The following copy-quality settings are available:

- Auto Select: Use this setting when you are not concerned about the quality of the copy. This is the default setting.
- Mixed: Use this setting for documents that contain a mixture of text and graphics.
- Text: Use this setting for documents that contain mostly text.
- Picture: Use this setting for documents that contain mostly graphics.

4. Touch Number of Copies, and then use the touchscreen keypad to adjust the number of copies.
5. Touch the Start Copy button to start copying.

Copy on both sides (duplex)

- Copy on both sides manually

Copy on both sides manually

NOTE: The steps vary according to the type of control panel.



1	2-line control panel (fax models)
2	2-line control panel
3	Touchscreen control panel

2-line control panels:

1. Place the document face-down on the scanner glass with the upper-left corner of the page in the upper-left corner of the glass. Close the scanner.
2. Press the Copy Menu button.
3. Use the arrow keys to select the **Two-sided** menu, and then press the OK button.
4. Use the arrow keys to select an option, and then press the OK button.
5. Press the Start Copy button to start copying.
6. The printer prompts you to load the next original document. Place it on the glass, and then press the Start Copy button.
7. Repeat this process until you have scanned the last page. Press the OK button to finish printing the copies.

Touchscreen control panels:

1. Place the document face-down on the scanner glass with the upper-left corner of the page in the upper-left corner of the glass. Close the scanner.
2. From the Home screen on the printer control panel, touch the Copy icon.
3. Touch the Settings button.

4. Scroll to and touch the Two-Sided button.
5. Swipe through the options, and then touch an option to select it.
6. Touch the Start Copy button to start copying.
7. The printer prompts you to load the next original document. Place it on the glass, and then touch the OK button.
8. Repeat this process until you have scanned the last page. Touch the Done button to finish printing the copies.

Additional copy tasks

Go to www.hp.com/support/ljM148MFP, www.hp.com/support/ljM227MFP.

Instructions are available for performing specific copy tasks, such as the following:

- Copy or scan pages from books or other bound documents
- Copy mixed-size documents
- Copy or scan both sides of an identification card
- Copy or scan a document into a booklet format

6 Scan

- Scan by using the HP Scan software (Windows)
- Scan by using the HP Easy Scan software (OS X)
- Set up the Scan to E-mail feature (touchscreen models only)
- Set up the Scan to Network Folder feature (touchscreen models only)
- Scan to a USB flash drive (touchscreen models only)
- Scan to email (touchscreen models only)
- Scan to a network folder (touchscreen models only)
- Additional scan tasks

For more information:

The following information is correct at the time of publication. For current information, see www.hp.com/support/ljM148MFP, www.hp.com/support/ljM227MFP.

HP's all-inclusive help for the printer includes the following information:

- Install and configure
- Learn and use
- Solve problems
- Download software and firmware updates
- Join support forums
- Find warranty and regulatory information

Scan by using the HP Scan software (Windows)

Use the HP Scan software to initiate scanning from software on your computer. You can save the scanned image as a file or send it to another software application.

1. Open the HP Printer Assistant.
   - **Windows 10**: From the **Start** menu, click **All Apps**, click **HP**, and then select the printer name.
   - **Windows 8.1**: Click the down arrow in lower left corner of the **Start** screen, and then select the printer name.
   - **Windows 8**: Right-click an empty area on the **Start** screen, click **All Apps** on the app bar, and then select the printer name.
   - **Windows 7**: From the computer desktop, click **Start**, select **All Programs**, click **HP**, click the folder for the printer, and then select the printer name.
2. In the HP Printer Assistant, select **Scan**, and then select **Scan a Document or Photo**.
3. Adjust the settings if necessary.
4. Click **Scan**.

Scan by using the HP Easy Scan software (OS X)

Use the HP Easy Scan software to initiate scanning from software on your computer.

1. Load the document in the document feeder or on the scanner glass according to the indicators on the printer.
2. From the computer, open **HP Easy Scan**, which is located in the **Applications** folder.
3. Follow the on-screen instructions to scan the document.
4. When you have scanned all the pages, click **File** and then **Save** to save them to a file.

Set up the Scan to E-mail feature (touchscreen models only)

- Introduction
- Before you begin
- Method one: Use the Scan to Email Wizard (Windows)
- Method two: Set up the Scan to Email feature via the HP Embedded Web Server (Windows)
- Set up the Scan to E-mail feature on a Mac

Introduction

The printer has a feature that enables it to scan a document and send it to one or more email addresses. To use this scan feature, the printer must be connected to a network; however, the feature is not available until it has been configured. There are two methods for configuring Scan to Email, the Scan to Email Setup Wizard (Windows), which is installed in the HP program group for the printer as part of the full software installation, and the Scan to Email Setup through the HP Embedded Web Server (EWS). Use the following information to set up the Scan to Email feature.

Before you begin

To set up the Scan to Email feature, the printer must have an active network connection to the same network as the computer that will run the setup process.

Administrators need the following information before beginning the configuration process.

- Administrative access to the printer
- SMTP server (e.g., smtp.mycompany.com)

NOTE: If you do not know the SMTP server name, SMTP port number, or authentication information, contact the email/Internet service provider or system administrator for the information. SMTP server names and port names are typically easy to find by doing an Internet search. For example, use terms like "gmail smtp server name" or "yahoo smtp server name" to search.

- SMTP port number
- SMTP server authentication requirements for outgoing email messages, including the user name and password used for authentication, if applicable.

NOTE: Consult your email service provider's documentation for information on digital sending limits for your email account. Some providers may temporarily lock your account if you exceed your sending limit.

Method one: Use the Scan to Email Wizard (Windows)

Some HP printer's software includes driver installation. At the end of this installation is an option to **Setup Scan to Folder and Email**. The setup wizards include the options for basic configuration.

NOTE: Some operating systems do not support the Scan to Email Wizard.

1. Open the HP Printer Assistant.

- **Windows 10**: From the **Start** menu, click **All Apps**, click **HP**, and then select the printer name.
- **Windows 8.1**: Click the down arrow in lower left corner of the **Start** screen, and then select the printer name.
- **Windows 8**: Right-click an empty area on the **Start** screen, click **All Apps** on the app bar, and then select the printer name.
- **Windows 7**: From the computer desktop, click **Start**, select **All Programs**, click **HP**, click the folder for the printer, and then select the printer name.

2. In the HP Printer Assistant, select **Scan**, and then select **Scan to E-mail Wizard**.

NOTE: If the **Scan to E-mail Wizard** option is not available, use Method two: Set up the Scan to Email feature via the HP Embedded Web Server (Windows) on page 76

3. In the **Outgoing Email Profiles** dialog, click the **New** button. The **Scan to Email Setup** dialog opens.
4. On the **1. Start** page, enter the sender's email address in the **Email Address** field.
5. In the **Display Name** field, enter the sender's name. This is the name that will display on the printer control panel.
6. To require a PIN to be entered on the printer control panel before the printer can send an email, enter a 4-digit PIN in the **Security PIN** field, and then re-enter the PIN in the **Confirm Security PIN** field, and then click **Next**.

NOTE: HP recommends creating a PIN to secure the email profile.

NOTE: When a PIN is created, it must be entered on the printer control panel each time the profile is used to send a scan to email.

7. On the **2. Authenticate** page, enter the **SMTP Server** name and **SMTP Port** number.

NOTE: In most cases, the default port number does not need to be changed.

NOTE: If you are using a hosted SMTP service such as Gmail, verify the SMTP address, port number, and SSL settings from the service provider's website or other sources. Typically, for Gmail, the SMTP address is smtp.gmail.com, port number 465, and the SSL should be enabled.

Please refer to online sources to confirm these server settings are current and valid at the time of configuration.

8. If you are using Google™ Gmail for email service, select the **Always use secure connection (SSL/TLS)** check box.
9. Select the **Maximum Size of Email** from the drop-down menu.

NOTE: HP recommends using the default file size of **Automatic** for the maximum size.

10. If the SMTP server requires authentication to send an email, select the **Email Log-in Authentication** check box, enter the **User ID** and **Password**, and then click **Next**.
11. On the **3. Configure** page, to automatically copy the sender on email messages sent from the profile, select **Include sender in all email messages sent out successfully from the printer**, and then click **Next**.

12. On the **4. Finish** page, review the information and verify all the settings are correct. If there is an error, click the **Back** button to correct the error. If the settings are correct, click the **Save and Test** button to test the configuration.
13. When the **Congratulations** message displays, click **Finish** to complete the configuration.
14. The **Outgoing Email Profiles** dialog now shows the newly added sender email profile. Click **Close** to exit the wizard.

Method two: Set up the Scan to Email feature via the HP Embedded Web Server (Windows)

- Step one: Access the HP Embedded Web Server (EWS)
- Step two: Configure the Scan to E-mail feature
- Step three: Add contacts to the E-mail Address Book
- Step four: Configure the default E-mail Options

Step one: Access the HP Embedded Web Server (EWS)

1. From the Home screen on the printer control panel, touch the Network button or the Wireless button to display the IP address or host name.
2. Open a web browser, and in the address line, type the IP address or host name exactly as it displays on the printer control panel. Press the Enter key on the computer keyboard. The EWS opens.

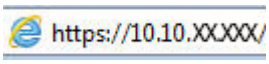

NOTE: If the web browser displays a message indicating that accessing the website might not be safe, select the option to continue to the website. Accessing this website will not harm the computer.

Step two: Configure the Scan to E-mail feature

1. In the HP EWS, click the **System** tab.
2. On the left navigation pane, click the **Administration** link.
3. In the Enabled Features area, set the **Scan to Email** option to **On**.
4. Click the **Scan** tab.
5. On the left navigation pane, click the **Outgoing E-mail Profiles** link.
6. On the **Outgoing E-mail Profiles** page, click the **New** button.
7. In the **E-mail Address** area, complete the following fields:
   a. In the **Your E-mail Address** field, enter the sender's email address for the new outgoing email profile.
   b. In the **Display Name** field, enter the sender's name. This is the name that will display on the printer control panel.
8. In the **SMTP Server Settings** area, complete the following fields:

a. In the **SMTP Server** field, enter the address of the SMTP server.

b. In the **SMTP Port** field, enter the SMTP port number.

NOTE: In most cases, the default port number does not need to be changed.

NOTE: If you are using a hosted SMTP service such as Gmail, verify the SMTP address, port number, and SSL settings from the service provider's website or other sources. Typically, for Gmail, the SMTP address is smtp.gmail.com, port number 465, and the SSL should be enabled.

Please refer to online sources to confirm these server settings are current and valid at the time of configuration.

c. If you are using Google™ Gmail for email service, select the **Always use secure connection (SSL/TLS)** check box.

9. If the SMTP server requires authentication to send an email, complete the following fields in the **SMTP Authentication** area:

a. Select the **SMTP server requires authentication for outgoing e-mail messages** check box.

b. In the **SMTP User ID** field, enter the user ID for the SMTP server.

c. In the **SMTP Password** field, enter the password for the SMTP server.

10. To require a PIN to be entered on the printer control panel before an email is sent using the email address, complete the following fields in the **Optional PIN** area:

a. In the **PIN (Optional)** field, enter a four digit PIN.

b. In the **Confirm PIN** field, re-enter the four digit PIN.

NOTE: HP recommends creating a PIN to secure the email profile.

NOTE: When a PIN is created, it must be entered on the printer control panel each time the profile is used to send a scan to email.

11. To configure optional email preferences, complete the following fields in the **E-mail Message Preferences** area:

a. From the **Maximum Size for E-mail Message Attachments** drop-down, select the maximum size for email message attachments.

NOTE: HP recommends using the default file size of **Automatic** for the maximum size.

b. To automatically copy the sender on email messages sent from the profile, select the **Auto CC** check box.

12. Review all the information, and then click one of the following options:

- **Save and Test**: Select this option to save the information and test the connection.
- **Save Only**: Select this option to save the information without testing the connection.
- **Cancel**: Select this option to quit the configuration without saving.

Step three: Add contacts to the E-mail Address Book

- In the left navigation pane, click **E-mail Address Book** to add email addresses to the address book accessible from the printer.

  To enter an individual email address complete the following task:

  a. In the **Contact Name** field, enter the name of the new email contact.

  b. In the **Contact E-mail Address**, enter the email address of the new email contact.

  c. Click **Add/Edit**.

  To create an email group, complete the following task:

  a. Click **New Group**.

  b. In the **Enter the group name** field, enter a name for the new group.

  c. Click a name in the **All Individuals** area, and then click the arrow button to move it to the **Individuals in Group** area.

  NOTE: Select multiple names at one time by pressing Ctrl and then clicking a name.

  d. Click **Save**.

Step four: Configure the default E-mail Options

- In the left navigation pane, click **E-mail options** to configure the default email options.

  a. In the **E-mail Subject and Body Text** area, complete the following fields:

     i. In the **E-mail Subject** field, enter a default subject line for the email messages.

     ii. In the **Body Text** field, enter a custom default message for the email messages.

     iii. Select **Show body text** to enable the default body text to display in emails.

     iv. Select **Hide body text** to suppress the default body text for an email.

  b. In the **Scan Settings** area, complete the following fields:

     i. From the **Scan File Type** drop-down, select the default file format for scanned files.

     ii. From the **Scan Paper Size** drop-down, select the default paper size for scanned files.

     iii. From the **Scan Resolution** drop-down, select the default resolution for scanned files.

     NOTE: Higher resolution images have more dots per inch (dpi), so they show more detail. Lower resolution images have fewer dots per inch and show less detail, but the file size is smaller.

     iv. From the **Output Color** drop-down, select **Black & White** or **Color**.

     v. In the **File Name Prefix** field, enter a file name prefix (e.g., MyScan).

  c. Click **Apply**.

Set up the Scan to E-mail feature on a Mac

- Step one: Access the HP Embedded Web Server (EWS)
- Step two: Configure the Scan to E-mail feature
- Step three: Add contacts to the E-mail Address Book
- Step four: Configure the default E-mail Options

Step one: Access the HP Embedded Web Server (EWS)

Use one of the following methods to open the Embedded Web Server (EWS) interface.

Method one: Use a web browser to open the HP Embedded Web Server (EWS)

1. From the Home screen on the printer control panel, touch the Network button or the Wireless button to display the IP address or host name.
2. Open a web browser, and in the address line, type the IP address or host name exactly as it displays on the printer control panel. Press the Enter key on the computer keyboard. The EWS opens.

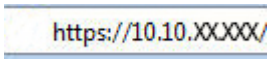

NOTE: If the web browser displays a message indicating that accessing the website might not be safe, select the option to continue to the website. Accessing this website will not harm the computer.

Method two: Use the HP Utility to open the HP Embedded Web Server (EWS)

1. Open the **Applications** folder, select **HP**, and then select **HP Utility**. The main HP Utility screen displays.
2. In the main HP Utility screen, access the HP Embedded Web Server (EWS) in one of the following ways:
   - In the **Printer Settings** area, click **Additional Settings**, and then click **Open Embedded Web Server**.
   - In the **Scan Settings** area, click **Scan to Email**, and then click **Begin Scan to E-mail Setup...**.

   The HP Embedded Web Server (EWS) opens.

Step two: Configure the Scan to E-mail feature

1. In the HP EWS, click the **System** tab.
2. On the left navigation pane, click the **Administration** link.
3. In the Enabled Features area, set the **Scan to Email** option to **On**.
4. Click the **Scan** tab.
5. On the left navigation pane, click the **Outgoing E-mail Profiles** link.
6. On the **Outgoing E-mail Profiles** page, click the **New** button.
7. In the **E-mail Address** area, complete the following fields:
   a. In the **Your E-mail Address** field, enter the sender's email address for the new outgoing email profile.
   b. In the **Display Name** field, enter the sender's name. This is the name that will display on the printer control panel.

8. In the **SMTP Server Settings** area, complete the following fields:

   a. In the **SMTP Server** field, enter the address of the SMTP server.

   b. In the **SMTP Port** field, enter the SMTP port number.

   NOTE: In most cases, the default port number does not need to be changed.

   NOTE: If you are using a hosted SMTP service such as gmail, verify the SMTP address, port number, and SSL settings from the service provider's website or other sources. Typically, for gmail, the SMTP address is smtp.gmail.com, port number 465, and the SSL should be enabled.

   Please refer to online sources to confirm these server settings are current and valid at the time of configuration.

   c. If you are using Google™ Gmail for email service, select the **Always use secure connection (SSL/TLS)** check box.

9. If the SMTP server requires authentication to send an email, complete the following fields in the **SMTP Authentication** area:

   a. Select the **SMTP server requires authentication for outgoing e-mail messages** check box.

   b. In the **SMTP User ID** field, enter the user ID for the SMTP server.

   c. In the **SMTP Password** field, enter the password for the SMTP server.

10. To require a PIN to be entered on the printer control panel before an email is sent using the email address, complete the following fields in the **Optional PIN** area:

    a. In the **PIN (Optional)** field, enter a four digit PIN.

    b. In the **Confirm PIN** field, re-enter the four digit PIN.

NOTE: HP recommends creating a PIN to secure the email profile.

NOTE: When a PIN is created, it must be entered on the printer control panel each time the profile is used to send a scan to email.

11. To configure optional email preferences, complete the following fields in the **E-mail Message Preferences** area:

    a. From the **Maximum Size for E-mail Message Attachments** drop-down, select the maximum size for email message attachments.

    NOTE: HP recommends using the default file size of **Automatic** for the maximum size.

    b. To automatically copy the sender on email messages sent from the profile, select the **Auto CC** check box.

12. Review all the information, and then click one of the following options:

    - **Save and Test**: Select this option to save the information and test the connection.
    - **Save Only**: Select this option to save the information without testing the connection.
    - **Cancel**: Select this option to quit the configuration without saving.

Step three: Add contacts to the E-mail Address Book

- In the left navigation pane, click **E-mail Address Book** to add email addresses to the address book accessible from the printer.

  To enter an individual email address complete the following task:

  a. In the **Contact Name** field, enter the name of the new email contact.

  b. In the **Contact E-mail Address**, enter the email address of the new email contact.

  c. Click **Add/Edit**.

  To create an email group, complete the following task:

  a. Click **New Group**.

  b. In the **Enter the group name** field, enter a name for the new group.

  c. Click a name in the **All Individuals** area, and then click the arrow button to move it to the **Individuals in Group** area.

  NOTE: Select multiple names at one time by pressing Ctrl and then clicking a name.

  d. Click **Save**.

Step four: Configure the default E-mail Options

- In the left navigation pane, click **E-mail options** to configure the default email options.

  a. In the **Default Subject and Body Text** area, complete the following fields:

     i. In the **E-mail Subject** field, enter a default subject line for the email messages.

     ii. In the **Body Text** field, enter a custom default message for the email messages.

     iii. Select **Show body text** to enable the default body text to display in emails.

     iv. Select **Hide body text** to suppress the default body text for an email.

  b. In the **Scan Settings** area, complete the following fields:

     i. From the **Scan File Type** drop-down, select the default file format for scanned files.

     ii. From the **Scan Paper Size** drop-down, select the default paper size for scanned files.

     iii. From the **Scan Resolution** drop-down, select the default resolution for scanned files.

     NOTE: Higher resolution images have more dots per inch (dpi), so they show more detail. Lower resolution images have fewer dots per inch and show less detail, but the file size is smaller.

     iv. From the **Output Color** drop-down, select **Black & White** or **Color**.

     v. In the **File Name Prefix** field, enter a file name prefix (e.g., MyScan).

  c. Click **Apply**.

Set up the Scan to Network Folder feature (touchscreen models only)

- Introduction
- Before you begin
- Method one: Use the Scan to Network Folder Wizard (Windows)
- Method two: Set up the Scan to Network Folder feature via the HP Embedded Web Server (Windows)
- Set up the Scan to Network Folder feature on a Mac

Introduction

The printer has a feature that enables it to scan a document and save it to a network folder. To use this scan feature, the printer must be connected to a network; however, the feature is not available until it has been configured. There are two methods for configuring Scan to network folder, the Scan to Network Folder Wizard (Windows), which is installed in the HP program group for the printer as part of the full software installation, and the Network Folder Setup through the HP Embedded Web Server (EWS). Use the following information to set up the Scan to Network Folder feature.

Before you begin

To set up the Scan to Network Folder feature, the printer must have an active network connection to the same network as the computer that will run the setup process.

Administrators need the following information before beginning the configuration process.

- Administrative access to the printer
- The network path of the destination folder (e.g., \\servername.us.companyname.net\scans)

NOTE: The network folder must be set up as a shared folder for the Scan to Network Folder feature to work.

Method one: Use the Scan to Network Folder Wizard (Windows)

Some HP printer's software includes driver installation. At the end of this installation is an option to **Setup Scan to Folder and Email**. The setup wizards include the options for basic configuration.

NOTE: Some operating systems do not support the Scan to Network Folder Wizard.

1. Open the HP Printer Assistant.
   - **Windows 10**: From the **Start** menu, click **All Apps**, click **HP**, and then select the printer name.
   - **Windows 8.1**: Click the down arrow in lower left corner of the **Start** screen, and then select the printer name.

- **Windows 8**: Right-click an empty area on the **Start** screen, click **All Apps** on the app bar, and then select the printer name.
- **Windows 7**: From the computer desktop, click **Start**, select **All Programs**, click **HP**, click the folder for the printer, and then select the printer name.

2. In the HP Printer Assistant, select **Scan**, and then select **Scan to Network Folder Wizard**.

NOTE: If the **Scan to Network Folder Wizard** option is not available, use Method two: Set up the Scan to Network Folder feature via the HP Embedded Web Server (Windows) on page 84

3. In the **Network Folder Profiles** dialog, click the **New** button. The **Scan to Network Folder Setup** dialog opens.
4. On the **1. Start** page, enter the folder name in the **Display Name** field. This is the name that will display on the printer control panel.
5. Complete the **Destination Folder** field in one of the following ways:
   a. Enter the file path manually.
   b. Click the **Browse** button and navigate to the folder location.
   c. Complete the following task to create a shared folder:
      i. Click **Share Path**.
      ii. In the **Manage Network Shares** dialog, click **New**.
      iii. In the **Share Name** field, enter the name to display for the shared folder.
      iv. To complete the Folder Path field, click the **Browse** button, and then select one of the following options. Click **OK** when done.
         - Navigate to an existing folder on the computer.
         - Click **Make New Folder** to create a new folder.
      v. If the shared path needs a description, enter a description in the **Description** field.
      vi. In the **Share Type** field, select one of the following options, and then click **Apply**.
         - **Public**
         - **Private**

      NOTE: For security considerations, HP recommends selecting **Private** as the share type.

      vii. When a **The share was successfully created** message displays, click **OK**.
      viii. Select the check box for the destination folder, and then click **OK**.
6. To create a shortcut to the network folder on the computer desktop, select the **Create a Desktop shortcut to the network folder** check box
7. To require a PIN to be entered on the printer control panel before the printer can send a scanned document to a network folder, enter a 4-digit PIN in the **Security PIN** field, and then re-enter the PIN in the **Confirm Security PIN** field. Click **Next**.

NOTE: HP recommends creating a PIN to secure the destination folder.

NOTE: When a PIN is created, it must be entered on the printer control panel each time a scan is sent to the network folder.

8. On the **2. Authenticate** page, enter the Windows **User Name** and Windows **Password** used to log in to the computer, and then click **Next**.
9. On the **3. Configure** page, select the default scan settings by completing the following task, and then click **Next**.
   a. From the **Document Type** drop-down, select the default file format for scanned files.
   b. From the **Color Preference** drop-down, select Black & White or Color.
   c. From the **Paper Size** drop-down, select the default paper size for scanned files.
   d. From the **Quality Settings** drop-down, select the default resolution for scanned files.

   NOTE: Higher resolution images have more dots per inch (dpi), so they show more detail. Lower resolution images have fewer dots per inch and show less detail, but the file size is smaller.

   e. In the **Filename Prefix** field, enter a file name prefix (e.g., MyScan).
10. On the **4. Finish** page, review the information and verify all the settings are correct. If there is an error, click the **Back** button to correct the error. If the settings are correct, click the **Save and Test** button to test the configuration.
11. When the **Congratulations** message displays, click **Finish** to complete the configuration.
12. The **Network Folder Profiles** dialog now shows the newly added sender email profile. Click **Close** to exit the wizard.

Method two: Set up the Scan to Network Folder feature via the HP Embedded Web Server (Windows)

- Step one: Access the HP Embedded Web Server (EWS)
- Step two: Configure the Scan to Network Folder feature

Step one: Access the HP Embedded Web Server (EWS)

1. From the Home screen on the printer control panel, touch the Network button or the Wireless button to display the IP address or host name.
2. Open a web browser, and in the address line, type the IP address or host name exactly as it displays on the printer control panel. Press the Enter key on the computer keyboard. The EWS opens.

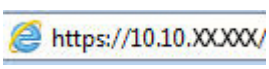

NOTE: If the web browser displays a message indicating that accessing the website might not be safe, select the option to continue to the website. Accessing this website will not harm the computer.

Step two: Configure the Scan to Network Folder feature

1. In the HP EWS, click the **System** tab.
2. On the left navigation pane, click the **Administration** link.

3. In the Enabled Features area, set the **Scan to Network Folder** option to **On**.
4. Click the **Scan** tab.
5. On the left navigation pane, make sure that the **Network Folder Setup** link is highlighted. The **Scan to Network Folder** page should be displayed.
6. On the **Network Folder Configuration** page, click the **New** button.
7. In the **Network Folder Information** area, complete the following fields:
   a. In the **Display Name** field, enter the name to display for the folder.
   b. In the **Network Path** field, enter the network path to the folder.
   c. In the **Username** field, enter the user name needed to access the folder on the network.
   d. In the **Password** field, enter the password needed to access the folder on the network.
8. To require a PIN to be entered on the printer control panel before the printer can send a file to a network folder, complete the following fields in the **Secure the Folder Access with a PIN** area:
   a. In the **PIN (Optional)** field, enter a four digit PIN.
   b. In the **Confirm PIN** field, re-enter the four digit PIN.

NOTE: HP recommends creating a PIN to secure the destination folder.

NOTE: When a PIN is created, it must be entered on the printer control panel each time a scan is sent to the network folder.

9. In the **Scan Settings** area, complete the following fields:
   a. From the **Scan File Type** drop-down, select the default file format scanned files.
   b. From the **Scan Paper Size** drop-down, select the default paper size for scanned files.
   c. From the **Scan Resolution** drop-down, select the default scan resolution for scanned files.

      NOTE: Higher resolution images have more dots per inch (dpi), so they show more detail. Lower resolution images have fewer dots per inch and show less detail, but the file size is smaller.

   d. In the **Output Color** drop-down, select whether scanned files will be in black and white or in color.
   e. In the **File Name Prefix** field, enter a file name prefix (e.g., MyScan).
10. Review all the information, and then click one of the following options:
    - **Save and Test**: Select this option to save the information and test the connection.
    - **Save Only**: Select this option to save the information without testing the connection.
    - **Cancel**: Select this option to quit the configuration without saving.

Set up the Scan to Network Folder feature on a Mac

- Step one: Access the HP Embedded Web Server (EWS)
- Step two: Configure the Scan to Network Folder feature

Step one: Access the HP Embedded Web Server (EWS)

Use one of the following methods to open the Embedded Web Server (EWS) interface.

Method one: Use a web browser to open the HP Embedded Web Server (EWS)

1. From the Home screen on the printer control panel, touch the Network button or the Wireless button to display the IP address or host name.
2. Open a web browser, and in the address line, type the IP address or host name exactly as it displays on the printer control panel. Press the Enter key on the computer keyboard. The EWS opens.

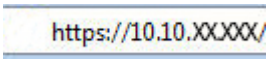

NOTE: If the web browser displays a message indicating that accessing the website might not be safe, select the option to continue to the website. Accessing this website will not harm the computer.

Method two: Use the HP Utility to open the HP Embedded Web Server (EWS)

1. Open the **Applications** folder, select **HP**, and then select **HP Utility**. The main HP Utility screen displays.
2. In the main HP Utility screen, access the HP Embedded Web Server (EWS) in one of the following ways:
   - In the **Printer Settings** area, click Additional Settings and then click **Open Embedded Web Server**.
   - In the **Scan Settings** area, click **Scan to Network Folder**, and then click **Register My Shared Folder...**.

   NOTE: If you do not have a shared network folder available, click **Help Me Do This** to view information about creating the folder.

   The HP Embedded Web Server (EWS) opens.

Step two: Configure the Scan to Network Folder feature

1. In the HP EWS, click the **System** tab.
2. On the left navigation pane, click the **Administration** link.
3. In the Enabled Features area, set the **Scan to Network Folder** option to **On**.
4. Click the **Scan** tab.
5. On the left navigation pane, make sure that the **Network Folder Setup** link is highlighted. The **Scan to Network Folder** page should be displayed.
6. On the **Network Folder Configuration** page, click the **New** button.
7. In the **Network Folder Information** area, complete the following fields:
   a. In the **Display Name** field, enter the name to display for the folder.
   b. In the **Network Path** field, enter the network path to the folder.
   c. In the **Username** field, enter the user name needed to access the folder on the network.
   d. In the **Password** field, enter the password needed to access the folder on the network.
8. To require a PIN to be entered on the printer control panel before the printer can send a file to a network folder, complete the following fields in the **Secure the Folder Access with a PIN** area:

a. In the **PIN (Optional)** field, enter a four digit PIN.

b. In the **Confirm PIN** field, re-enter the four digit PIN.

NOTE: HP recommends creating a PIN to secure the destination folder.

NOTE: When a PIN is created, it must be entered on the printer control panel each time a scan is sent to the network folder.

9. In the **Scan Settings** area, complete the following fields:

   a. From the **Scan File Type** drop-down, select the default file format scanned files.

   b. From the **Scan Paper Size** drop-down, select the default paper size for scanned files.

   c. From the **Scan Resolution** drop-down, select the default scan resolution for scanned files.

   NOTE: Higher resolution images have more dots per inch (dpi), so they show more detail. Lower resolution images have fewer dots per inch and show less detail, but the file size is smaller.

   d. In the **Output Color** drop-down, select whether scanned files will be in black and white or in color.

   e. In the **File Name Prefix** field, enter a file name prefix (e.g., MyScan).

10. Review all the information, and then click one of the following options:

- **Save and Test**: Select this option to save the information and test the connection.
- **Save Only**: Select this option to save the information without testing the connection.
- **Cancel**: Select this option to quit the configuration without saving.

Scan to a USB flash drive (touchscreen models only)

1. Load the document on the scanner glass or into the document feeder according to the indicators on the printer.
2. Insert a USB flash drive into the walk-up USB port.
3. The USB Flash Drive menu opens with the following options:
   - Print Documents
   - View and Print Photos
   - Scan to USB Drive
4. Select Scan to USB Drive.
5. When the summary screen opens, the following settings can be adjusted:
   - Scan File Type
   - Scan Resolution
   - Scan Paper Size
   - Scan Source
   - File Name Prefix
   - Output Color
6. Touch the Scan button to scan and save the file.

   The printer creates a folder named **HPSCANS** on the USB drive, and it saves the file in .PDF or .JPG format using an automatically generated file name.

Scan to email (touchscreen models only)

Use the printer control panel to scan a file directly to an email address. The scanned file is sent to the address as an email message attachment.

NOTE: In order to use this feature, the printer must be connected to a network and the Scan to Email feature must be configured by using the Scan to Email Setup Wizard (Windows) or the HP Embedded Web Server.

1. Load the document on the scanner glass according to the indicators on the printer.
2. From the Home screen on the printer control panel, touch the Scan icon.
3. Touch Scan to E-mail.
4. Select the From address that you want to use. This is also known as an “outgoing email profile.”

   NOTE: If the printer is configured with only one outgoing email profile, then this option will not be available.

   NOTE: If the PIN feature has been set up, enter the PIN and touch the OK button. However, a PIN is not required to use this feature.
5. Touch the To button and pick the address or group to which you want to send the file. Touch the Done button when finished.

   - To send the message to a different address, touch the New button again and then enter the email address.
6. Touch the Subject button if you would like to add a subject line
7. To view the scan settings, touch Settings.

   To change a scan setting, touch Edit and then change the setting.
8. Touch the Scan button to start the scan job.

Scan to a network folder (touchscreen models only)

Use the printer control panel to scan a document and save it to a folder on the network.

NOTE: In order to use this feature, the printer must be connected to a network and the Scan to Network Folder feature must be configured by using the Scan to Network Folder Setup Wizard (Windows) or the HP Embedded Web Server.

1. Load the document on the scanner glass according to the indicators on the printer.
2. From the Home screen on the printer control panel, touch the Scan icon.
3. Touch the Scan to Network Folder item.
4. In the list of network folders, select the folder to which you want to save the document.
5. The control panel screen displays the scan settings.
   - If you want to change any of the settings, touch the Settings button, and then change the settings.
   - If the settings are correct, go to the next step.
6. Touch the Scan button to start the scan job.

Additional scan tasks

Go to www.hp.com/support/ljM148MFP, www.hp.com/support/ljM227MFP.

Instructions are available for performing specific scan tasks, such as the following:

- How to scan a general photo or document
- How to scan as editable text (OCR)
- How to scan multiple pages into a single file

7 Fax

- Set up to send and receive faxes
- Send a fax
- Additional fax tasks

For more information:

The following information is correct at the time of publication. For current information, see www.hp.com/support/ljM148MFP, www.hp.com/support/ljM227MFP.

HP's all-inclusive help for the printer includes the following information:

- Install and configure
- Learn and use
- Solve problems
- Download software and firmware updates
- Join support forums
- Find warranty and regulatory information

Set up to send and receive faxes

- Before starting
- Step 1: Identify the phone connection type
- Step 2: Set up the fax
- Step 3: Configure the fax time, date, and header
- Step 4: Run a fax test

Before starting

Make sure that the printer was fully set up before connecting the fax service.

NOTE: Use the telephone cable and any adapters that shipped with the printer to connect the printer to the telephone jack.

NOTE: In countries/regions that use serial telephone systems, an adapter is shipped with the printer. Use the adapter to connect other telecom devices to the same telephone jack the printer is connected to.

Complete the instructions in each of the following four steps:

Step 1: Identify the phone connection type on page 94.

Step 2: Set up the fax on page 95.

Step 3: Configure the fax time, date, and header on page 98.

Step 4: Run a fax test on page 100.

Step 1: Identify the phone connection type

Review the following equipment and service types to determine which setup method to use. The method used depends on the equipment and services already installed on the phone system.

NOTE: The printer is an analog device. HP recommends using the printer on a dedicated analog telephone line.

- **Dedicated phone line**: The printer is the only piece of equipment or service connected to the phone line
- **Voice calls**: Voice and fax calls use the same phone line
- **Answering machine**: An answering machine answers voice calls on the same phone line used for fax calls
- **Voice mail**: A voice-mail subscription service uses the same phone line as the fax
- **Distinctive ring service**: A service from the telephone company that allows several phone numbers to be associated with one phone line, and each number has a different ring pattern; the printer detects the ring pattern assigned to it and answers the call
- **Computer dial-up modem**: A computer uses the phone line to connect to the Internet through a dial-up connection
- **DSL line**: A digital subscriber line (DSL) service from the telephone company; this service might be called ADSL in some countries/regions

- **PBX or ISDN phone system**: A private branch exchange (PBX) phone system or an integrated services digital network (ISDN) system
- **VoIP phone system**: Voice over Internet protocol (VoIP) through an Internet provider

Step 2: Set up the fax

Click the link below that best describes the environment in which the printer will be sending and receiving faxes, and follow the setup instructions.

- Dedicated phone line on page 95
- Shared voice/fax line on page 96
- Shared voice/fax line with an answering machine on page 97

Instructions for only three of the connection types are included here. For more information about connecting the printer with other connection types, go to the support website www.hp.com/support/ljM148MFP, www.hp.com/support/ljM227MFP.

NOTE: This printer is an analog fax device. HP recommends using the printer on a dedicated analog telephone line. For a digital environment, such as DSL, PBX, ISDN, or VoIP, make sure to use the correct filters and configure the digital settings correctly. For more information, contact the digital service provider.

NOTE: Do not connect more than three devices to the telephone line.

NOTE: Voice mail is not supported with this printer.

Dedicated phone line

Follow these steps to set up the printer on a dedicated phone line with no additional services.

1. Connect the telephone cable to the fax port on the printer and to the telephone jack on the wall.

   NOTE: Some countries/regions might require an adapter for the telephone cable that came with the printer.

   NOTE: On some printers, the fax port might be above the phone port. Refer to the icons on the printer.

   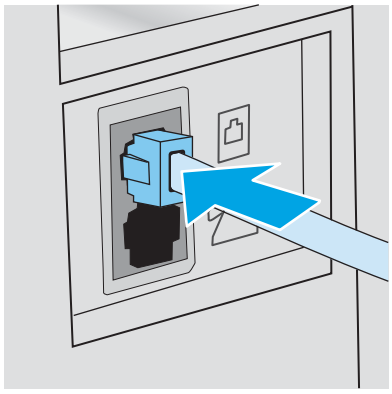

2. Set the printer to answer fax calls automatically.

   a. Turn the printer on.

   b. From the control panel, open the Setup menu.

c. Select the Fax Setup menu.

d. Select the Basic Setup menu.

e. Select the Answer Mode setting.

f. Select the Automatic option.

3. Continue to Step 3: Configure the fax time, date, and header on page 98.

Shared voice/fax line

Follow these steps to set up the printer on a shared voice/fax line.

1. Disconnect any devices that are connected to the telephone jack.
2. Connect the telephone cable to the fax port on the printer and to the telephone jack on the wall.

NOTE: Some countries/regions might require an adapter to the telephone cable that came with the printer.

NOTE: On some printers, the fax port might be above the phone port. Refer to the icons on the printer.

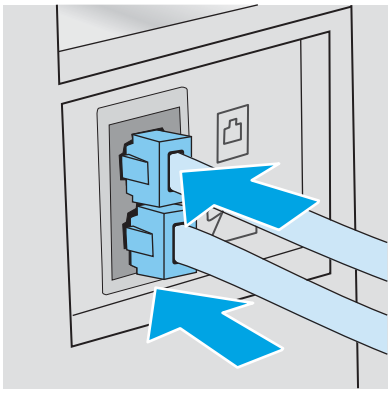

3. Remove the plug from the telephone line out port on the rear of the printer, and then connect a phone to this port.
4. Set the printer to answer fax calls automatically.

a. Turn the printer on.

b. From the control panel, open the Setup menu.

c. Select the Fax Setup menu.

d. Select the Basic Setup menu.

e. Select the Answer Mode setting, and then select the Automatic option.

5. Set the printer to check for a dial tone before sending a fax.

NOTE: This prevents the printer from sending a fax while someone is on the telephone.

a. From the control panel, open the Setup menu.

b. Select the Fax Setup menu.

c. Select the Advanced Setup menu.

d. Select the Detect Dial Tone setting, and then select On.

6. Continue to Step 3: Configure the fax time, date, and header on page 98.

Shared voice/fax line with an answering machine

Follow these steps to set up the printer on a shared voice/fax line with an answering machine.

1. Disconnect any devices that are connected to the telephone jack.
2. Remove the plug from the telephone line out port on the rear of the printer.
3. Connect the telephone cable to the fax port on the printer and to the telephone jack on the wall.

NOTE: Some countries/regions might require an adapter for the telephone cable that came with the printer.

NOTE: On some printers, the fax port might be above the phone port. Refer to the icons on the printer.

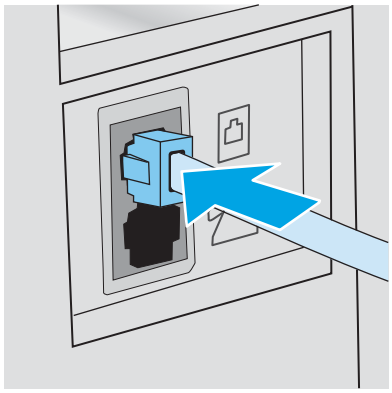

4. Connect the answering machine telephone cable to the telephone line out port on the rear of the printer.

NOTE: Connect the answering machine directly to the printer, or the answering machine might record fax tones from a sending fax machine and the printer might not receive faxes.

NOTE: If the answering machine does not have a built-in telephone, connect a telephone to the **OUT** port on the answering machine for convenience.

NOTE: On some printers, the fax port might be above the phone port. Refer to the icons on the printer.

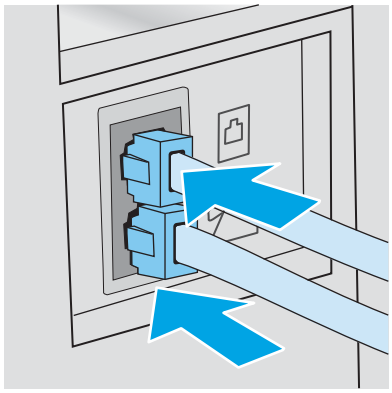

5. Configure the rings to answer setting on the printer.

    a. Turn the printer on.

    b. From the control panel, open the Setup menu.

    c. Select the Fax Setup menu.

    d. Select the Basic Setup menu.

    e. Select the Rings to Answer option.

    f. Use the numeric keypad on the printer control panel to set the number of rings to 5 or more, and then select OK.

6. Set the printer to answer fax calls automatically.

    a. From the control panel, open the Setup menu.

    b. Select the Fax Setup menu.

    c. Select the Basic Setup menu.

    d. Select the Answer Mode setting, and then select the Automatic option.

7. Set the printer to check for a dial tone before sending a fax.

    NOTE: This prevents the printer from sending a fax while someone is on the telephone.

    a. From the control panel, open the Setup menu.

    b. Select the Fax Setup menu.

    c. Select the Advanced Setup menu.

    d. Select the Detect Dial Tone setting, and then select the **On** button.

8. Continue to Step 3: Configure the fax time, date, and header on page 98.

Step 3: Configure the fax time, date, and header

Configure the printer fax settings using one of the following methods:

- HP Fax Setup Wizard on page 98 (recommended method)
- Printer control panel on page 99
- HP Embedded Web Server (EWS) and HP Device Toolbox (Windows) on page 99 (if the software is installed)

NOTE: In the United States and many other countries/regions, setting the time, date, and other fax header information is a legal requirement.

HP Fax Setup Wizard

Access the Fax Setup Wizard after *initial* setup and software installation by following these steps.

NOTE: The Fax Setup Wizard is only available in the Windows 7 operating system.

1. Open the HP Printer Assistant.
    - **Windows 10**: From the **Start** menu, click **All Apps**, click **HP**, and then select the printer name.
    - **Windows 8.1**: Click the down arrow in lower left corner of the **Start** screen, and then select the printer name.
    - **Windows 8**: Right-click an empty area on the **Start** screen, click **All Apps** on the app bar, and then select the printer name.
    - **Windows 7**: From the computer desktop, click **Start**, select **All Programs**, click **HP**, click the folder for the printer, and then select the printer name.
2. In the HP Printer Assistant, select **Fax**, and then select **Fax Setup Wizard**.
3. Follow the on-screen instructions in the Fax Setup Wizard to configure the fax settings.
4. Continue to Step 4: Run a fax test on page 100.

Printer control panel

To use the control panel to set the date, time, and header, complete the following steps.

1. From the control panel, open the Setup menu.
2. Select the Fax Setup menu.
3. Select the Basic Setup menu.
4. Select the Time/Date option.
5. Select 12-hour clock or 24-hour clock.
6. Use the keypad to enter the current time, and then select OK.

> NOTE: **Touchscreen control panels**: Select the 123 button to open a keypad that contains special characters, if needed.

7. Select the date format.
8. Use the keypad to enter the current date, and then select OK.
9. Select the Fax Header menu.
10. Use the keypad to enter the fax number, and then select OK.

> NOTE: The maximum number of characters for the fax number is 20.

11. Use the keypad to enter the company name or header, and then select OK.

> NOTE: The maximum number of characters for the fax header is 25.

12. Continue to Step 4: Run a fax test on page 100.

HP Embedded Web Server (EWS) and HP Device Toolbox (Windows)

1. Start the HP EWS either from the **Start** menu or a web browser.

Start menu

a. Open the HP Printer Assistant.

- **Windows 10**: From the **Start** menu, click **All Apps**, click **HP**, and then select the printer name.
- **Windows 8.1**: Click the down arrow in lower left corner of the **Start** screen, and then select the printer name.
- **Windows 8**: Right-click an empty area on the **Start** screen, click **All Apps** on the app bar, and then select the printer name.
- **Windows 7**: From the computer desktop, click **Start**, select **All Programs**, click **HP**, click the folder for the printer, and then select the printer name.

b. In the HP Printer Assistant, select **Print**, and then select **HP Device Toolbox**.

Web browser

a. **2-line control panels**: From the control panel, press the Setup button. Open the **Network Setup** menu, and then select **Show IP Address** to display the IP address or host name.

Touchscreen control panels: From the control panel, touch the Connection Information button, and then touch the Network Connected button or the Network Wi-Fi ON button to display the IP address or host name.

b. Open a web browser, and in the address line, type the IP address or host name exactly as it displays on the printer control panel. Press the Enter key on the computer keyboard. The EWS opens.

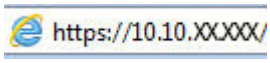

NOTE: If the web browser displays a message indicating that accessing the website might not be safe, select the option to continue to the website. Accessing this website will not harm the computer.

2. Click the **Fax** tab.
3. Follow the on-screen instructions to configure the fax settings.
4. Continue to Step 4: Run a fax test on page 100.

Step 4: Run a fax test

Run a fax test to make sure that the fax is set up correctly.

1. From the control panel, open the Setup menu.
2. Select the Service menu.
3. Select the Fax Service menu.
4. Select the Run Fax Test option. The printer prints a test report.
5. Review the report.
   - If the report indicates the printer **passed the test**, the printer is ready to send and receive faxes.
   - If the report indicates the printer **failed the test**, review the report for more information about fixing the problem. The fax troubleshooting checklist has more information on resolving fax problems.

Send a fax

- Fax from the flatbed scanner
- Fax from the document feeder
- Use speed dials and group-dial entries
- Send a fax from the software
- Send a fax from a third-party software program, such as Microsoft Word

Fax from the flatbed scanner

1. Place the document face-down on the scanner glass.

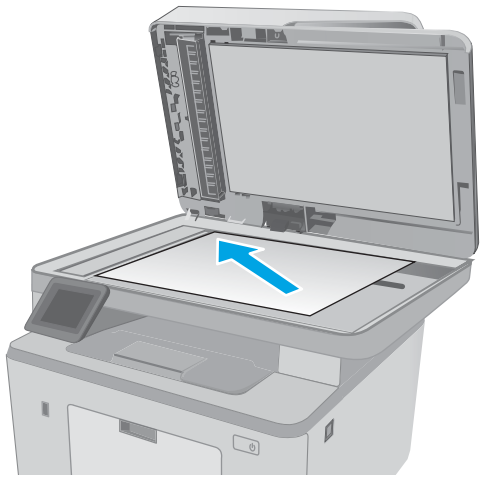

2. From the Home screen on the printer control panel, touch the Fax icon.
3. Use the keypad to enter the fax number.
4. Touch the Start Fax button.
5. The printer prompts you to confirm that you are sending from the scanner glass. Touch the Yes button.
6. The printer prompts you to load the first page. Touch the OK button.
7. The printer scans the first page and then prompts you to load another page. If the document has multiple pages, touch the Yes button. Continue this process until you have scanned all the pages.
8. When you have scanned the last page, touch the No button at the prompt. The printer sends the fax.

Fax from the document feeder

1. Insert the originals into the document feeder face-up.

   CAUTION: To prevent damage to the printer, do not use an original that contains correction tape, correction fluid, paper clips, or staples. Also, do not load photographs, small originals, or fragile originals into the document feeder.

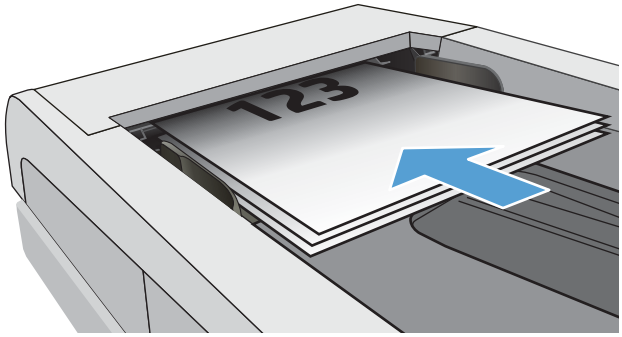

2. Adjust the paper guides until they are snug against the paper.

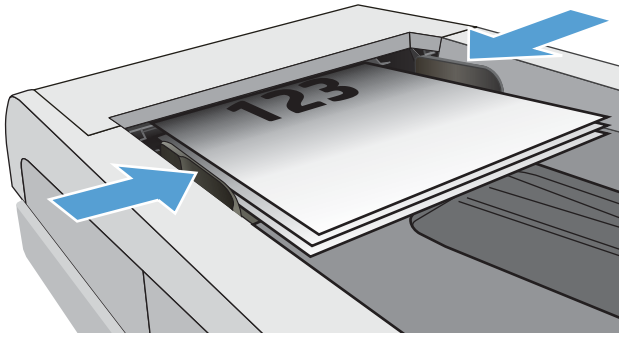

3. From the Home screen on the printer control panel, touch the Fax icon.
4. Use the keypad to enter the fax number.
5. Touch the Start Fax button.

Use speed dials and group-dial entries

NOTE: Phone book entries must be set up using the Fax Menu prior to using the phone book to send faxes.

1. Load the document onto the scanner glass or into the document feeder.

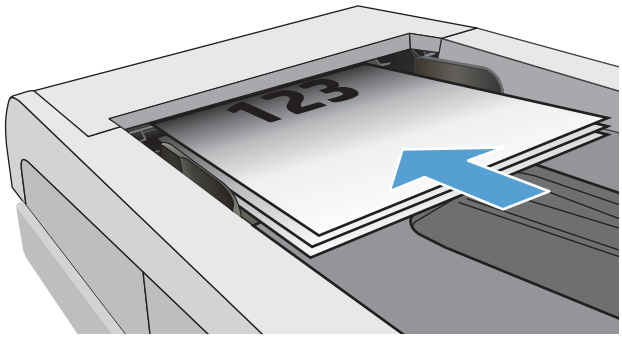

2. From the Home screen on the printer control panel, touch the Fax  icon.
3. On the keypad, touch the fax phone book icon.
4. Touch the name of the individual or group entry that you want to use.
5. Touch the Start Fax button.

Send a fax from the software

The procedure to send a fax varies according to your specifications. The most typical steps follow.

1. Open the HP Printer Assistant.
   - **Windows 10**: From the **Start** menu, click **All Apps**, click **HP**, and then select the printer name.
   - **Windows 8.1**: Click the down arrow in lower left corner of the **Start** screen, and then select the printer name.
   - **Windows 8**: Right-click an empty area on the **Start** screen, click **All Apps** on the app bar, and then select the printer name.
   - **Windows 7**: From the computer desktop, click **Start**, select **All Programs**, click **HP**, click the folder for the printer, and then select the printer name.
2. In the HP Printer Assistant, select **Fax**, and then select **Send Fax**.
3. Enter the fax number of one or more recipients.
4. Load the document in the document feeder.
5. Click **Send Now**.

Send a fax from a third-party software program, such as Microsoft Word

1. Open a document in a third-party program.
2. Click the **File** menu, and then click **Print**.
3. Select the fax print driver from the print driver drop-down list. The fax software opens.
4. Enter the fax number of one or more recipients.
5. Include any pages loaded at the printer. This step is optional.
6. Click **Send Now**.

Additional fax tasks

Go to www.hp.com/support/ljM148MFP, www.hp.com/support/ljM227MFP.

Instructions are available for performing specific fax tasks, such as the following:

- Create and manage fax speed dial lists
- Configure fax billing codes
- Use a fax printing schedule
- Block incoming faxes
- Fax archiving and forwarding

8 Manage the printer

- Use HP Web Services applications (touchscreen models only)
- Change the printer connection type (Windows)
- Advanced configuration with HP Embedded Web Server (EWS) and HP Device Toolbox (Windows)
- Advanced configuration with HP Utility for OS X
- Configure IP network settings
- Printer security features
- Configure the Quiet Print Mode settings
- Energy-conservation settings
- Update the firmware

For more information:

The following information is correct at the time of publication. For current information, see www.hp.com/support/ljM148MFP, www.hp.com/support/ljM227MFP.

HP's all-inclusive help for the printer includes the following information:

- Install and configure
- Learn and use
- Solve problems
- Download software and firmware updates
- Join support forums
- Find warranty and regulatory information

Use HP Web Services applications (touchscreen models only)

HP Web Services applications provide useful content that can be automatically downloaded from the Internet to the printer. Choose from a variety of applications including news, calendars, forms, and cloud-based document storage.

To activate these applications and schedule the downloads, go to the HP Connected website at www.hpconnected.com

NOTE: To use this feature, the printer must be connected to a wired or wireless network and have internet access. HP Web Services must be enabled on the printer.

Enable Web Services

This process enables both HP Web Services and the Apps button.

1. From the Home screen on the printer control panel, swipe until the Setup menu displays. Touch the Setup icon to open the menu.
2. Touch HP Web Services.
3. Touch Enable Web Services.
4. To print the HP Web Services Terms of Use, touch Print.
5. Touch OK to complete the procedure.

   After you download an application from the HP Connected website, it is available in the Apps menu on the printer control panel.

Change the printer connection type (Windows)

If you are already using the printer and you wish to change the way it is connected, use **Device Setup & Software** to change the connection. For example, connect the new printer to the computer using a USB or network connection, or change the connection from a USB to a wireless connection.

To open **Device Setup & Software**, complete the following procedure:

1. Open the HP Printer Assistant.
   - **Windows 10**: From the **Start** menu, click **All Apps**, click **HP**, and then select the printer name.
   - **Windows 8.1**: Click the down arrow in lower left corner of the **Start** screen, and then select the printer name.
   - **Windows 8**: Right-click an empty area on the **Start** screen, click **All Apps** on the app bar, and then select the printer name.
   - **Windows 7, Windows Vista, and Windows XP**: From the computer desktop, click **Start**, select **All Programs**, click **HP**, click the folder for the printer, and then select the printer name.
2. In the HP Printer Assistant, select **Tools** from the navigation bar, and then select **Device Setup & Software**.

Advanced configuration with HP Embedded Web Server (EWS) and HP Device Toolbox (Windows)

Use the HP Embedded Web Server to manage printing functions from a computer instead of the printer control panel.

- View printer status information
- Determine the remaining life for all supplies and order new ones
- View and change tray configurations
- View and change the printer control-panel menu configuration
- View and print internal pages
- Receive notification of printer and supplies events
- View and change network configuration

The HP Embedded Web Server works when the printer is connected to an IP-based network. The HP Embedded Web Server does not support IPX-based printer connections. Internet access is not needed to open and use the HP Embedded Web Server.

When the printer is connected to the network, the HP Embedded Web Server is automatically available.

NOTE: HP Device Toolbox is software used to connect to the HP Embedded Web Server when the printer is connected to a computer via USB. It is available only if a full installation was performed when the printer was installed on a computer. Depending on how the printer is connected, some features might not be available.

NOTE: The HP Embedded Web Server is not accessible beyond the network firewall.

Method one: Open the HP Embedded Web Server (EWS) from the software

1. Open the HP Printer Assistant.
   - **Windows 10**: From the **Start** menu, click **All Apps**, click **HP**, and then select the printer name.
   - **Windows 8.1**: Click the down arrow in lower left corner of the **Start** screen, and then select the printer name.
   - **Windows 8**: Right-click an empty area on the **Start** screen, click **All Apps** on the app bar, and then select the printer name.
   - **Windows 7**: From the computer desktop, click **Start**, select **All Programs**, click **HP**, click the folder for the printer, and then select the printer name.
2. In the HP Printer Assistant, select **Print**, and then select **HP Device Toolbox**.

Method two: Open the HP Embedded Web Server (EWS) from a web browser

NOTE: The steps vary according to the type of control panel.

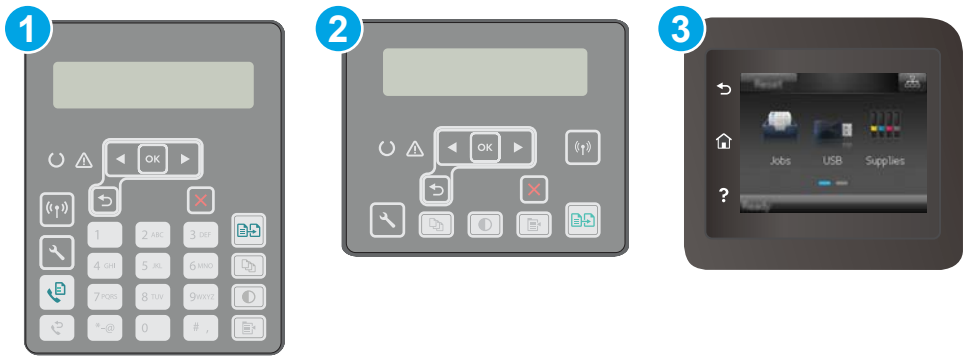

1	2-line control panel (fax models)
2	2-line control panel
3	Touchscreen control panel

1. **2-line control panels:** On the printer control panel, press the wrench button. Open the **Network Setup** menu, and then select **Show IP Address** to display the IP address or host name.

   Touchscreen control panels: From the Home screen on the printer control panel, touch the Connection Information button, and then touch the Network Connected button or the Network Wi-Fi ON button to display the IP address or host name.

2. Open a web browser, and in the address line, type the IP address or host name exactly as it displays on the printer control panel. Press the Enter key on the computer keyboard. The EWS opens.

   https://10.10.XXXXX/

NOTE: If the web browser displays a message indicating that accessing the website might not be safe, select the option to continue to the website. Accessing this website will not harm the computer.

Tab or section	Description
Home tab Provides printer, status, and configuration information.	• **Device Status**: Shows the printer status and shows the approximate percent life remaining of HP supplies. • **Supplies Status**: Shows the approximate percent life remaining of HP supplies. Actual supply life remaining can vary. Consider having a replacement supply available to install when print quality is no longer acceptable. The supply does not need to be replaced unless the print quality is no longer acceptable. • **Device Configuration**: Shows the information found on the printer configuration page. • **Network Summary**: Shows the information found on the printer network configuration page. • **Reports**: Print the configuration and supplies status pages that the printer generates. • **Job Storage Log**: Shows a summary of all jobs stored in the printer memory. (Job storage printers only) • **Color Usage Log**: Shows a summary of color jobs that the printer has produced. (Color printers only) • **Event Log**: Shows a list of all printer events and errors. • **Open Source Licenses**: Shows a summary of the licenses for open source software programs that can be used with the printer.
System tab Provides the ability to configure the printer from your computer.	• **Device Information**: Provides basic printer and company information. • **Paper Setup**: Change the default paper-handling settings for the printer. • **Print Quality**: Change the default print-quality settings for the printer. • **Energy Settings**: Change the default times for entering Sleep/Auto Off mode or automatic shut down. • **Job Storage Setup**: Configure the job storage settings for the printer. (Job storage printers only) • **Paper Types**: Configure print modes that correspond to the paper types that the printer accepts. • **System Setup**: Change the system defaults for the printer. • **Supply Settings**: Change the settings for **Cartridge is low** alerts and other supplies information. • **Service**: Perform the cleaning procedure on the printer. • **Save and Restore**: Save the current settings for the printer to a file on the computer. Use this file to load the same settings onto another printer or to restore these settings to this printer at a later time. • **Administration**: Set or change the printer password. Enable or disable printer features. NOTE: The **System** tab can be password-protected. If this printer is on a network, always consult with the administrator before changing settings on this tab.
Print tab Provides the ability to change default print settings from your computer.	• **Printing**: Change the default printer print settings, such as number of copies and paper orientation. These are the same options that are available on the control panel. • **PostScript**: Turn off or on the **Print PS Errors** feature.

Tab or section	Description
Fax tab (Fax printers only)	• **Receive Options**: Configure how the printer handles incoming faxes. • **Phone Book**: Add or delete entries in the fax phone book. • **Junk Fax List**: Set fax numbers to block from sending faxes to the printer. • **Fax Activity Log**: Review recent fax activity for the printer.
Scan tab (MFP printers only)	Configure the Scan to Network Folder and Scan to E-mail features. • **Network Folder Setup**: Configure folders on the network to which the printer can save a scanned file. • **Scan to E-mail Setup**: Begin the process to set up the Scan to E-mail feature. • **Outgoing E-mail Profiles**: Set an email address that will appear as the “from” address for all emails sent from the printer. • **E-mail Address Book**: Add or delete entries in the email address book. • **E-mail Options**: Configure a default subject line and body text. Configure default scan settings for emails.
Copy tab (MFP printers only)	Use this tab to set up the default copy settings.
Networking tab (Network-connected printers only) Provides the ability to change network settings from your computer.	Network administrators can use this tab to control network-related settings for the printer when it is connected to an IP-based network. It also allows the network administrator to set up Wi-Fi Direct functionality. This tab does not appear if the printer is directly connected to a computer.
HP Web Services tab	Use this tab to set up and use various Web tools with the printer.

Advanced configuration with HP Utility for OS X

Use the HP Utility to check printer status or to view or change printer settings from a computer.

You can use the HP Utility when the printer is connected with a USB cable or is connected to a TCP/IP-based network.

Open HP Utility

1. At the computer, open the **Applications** folder.
2. Select **HP**, and then select **HP Utility**.

HP Utility features

The HP Utility toolbar includes these items:

- **Devices**: Click this button to show or hide Mac products found by the HP Utility.
- **All Settings**: Click this button to return to the HP Utility main view.
- **HP Support**: Click this button to open a browser and go to the HP support website.
- **Supplies**: Click this button to open the HP SureSupply website.
- **Registration**: Click this button to open the HP registration website.
- **Recycling**: Click this button to open the HP Planet Partners Recycling Program website.

HP Utility consists of pages that you open by clicking in the **All Settings** list. The following table describes the tasks that you can perform with HP Utility.

Item	Description
Supplies Status	Show the printer supplies status and provides links for ordering supplies online.
Device Information	Show information about the currently selected printer, including the printer Service ID (if assigned), the firmware version (FW Version), the Serial Number, and the IP address.
Commands	Send special characters or print commands to the printer after the print job. NOTE: This option is available only after you open the **View** menu and select the **Show Advanced Options** item.
Color Usage (Color printers only)	Show information about color jobs that the printer has produced.
File Upload	Transfer files from the computer to the printer. You can upload the following types of files: ○ HP LaserJet printer command language (.PRN) ○ Portable document format (.PDF) ○ Postscript (.PS) ○ Text (.TXT)
Power Management	Configure the printer economy settings.

Item	Description
Update Firmware	Transfer a firmware update file to the printer. NOTE: This option is available only after you open the **View** menu and select the **Show Advanced Options** item.
HP Connected	Access the HP Connected website.
Message Center	Display error events that have occurred with the printer.
Duplex Mode (Duplex printers only)	Turn on the automatic two-sided printing mode.
Network Settings (Network-connected printers only)	Configure the network settings, such as the IPv4 settings, IPv6 settings, Bonjour settings, and other settings.
Supplies Management	Configure how the printer should behave when supplies are nearing the end of their estimated life.
Trays Configuration	Change paper size and type for each of the trays.
Additional Settings	Open the HP Embedded Web Server (EWS) for the printer. NOTE: USB connections are not supported.
Proxy Server Settings	Configure a proxy server for the printer.
Basic Fax Settings (MFP fax models only)	Set up the fields in the fax header and configure how the printer answers incoming calls.
Fax Forwarding (MFP fax models only)	Set up the printer to send the incoming faxes to a different number.
Fax Logs (MFP fax models only)	View the logs of all faxes.
Fax Speed Dials (MFP fax models only)	Add fax numbers to the speed dial list.
Junk Fax Blocking (MFP fax models only)	Store the fax numbers you want to block.
Scan to E-mail (MFP printers only)	Open the HP Embedded Web Server (EWS) page for configuring settings for scanning to email.
Scan to Network Folder (MFP printers only)	Open the HP Embedded Web Server (EWS) page for configuring settings for scanning to a network folder.

Configure IP network settings

- Introduction
- Printer sharing disclaimer
- View or change network settings
- Rename the printer on a network
- Manually configure IPv4 TCP/IP parameters from the control panel
- Link speed and duplex settings

Introduction

Use the following sections to configure the printer network settings.

Printer sharing disclaimer

HP does not support peer-to-peer networking, as the feature is a function of Microsoft operating systems and not of the HP printer drivers. Go to Microsoft at www.microsoft.com.

View or change network settings

Use the HP Embedded Web Server to view or change IP configuration settings.

NOTE: The steps vary according to the type of control panel.

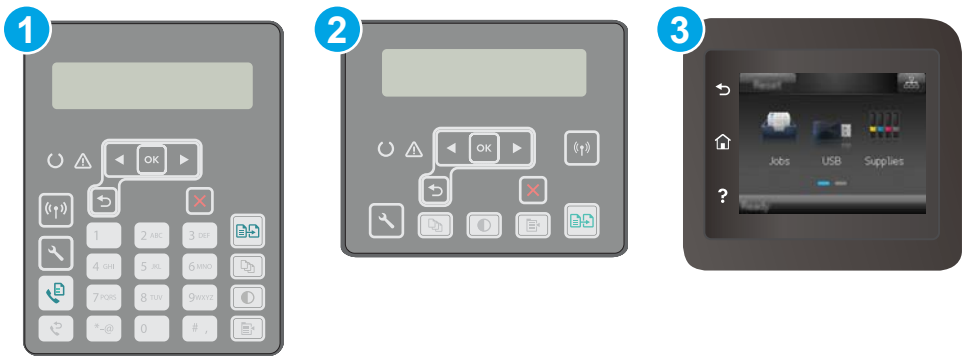

1	2-line control panel (fax models)
2	2–line control panel
3	Touchscreen control panel

1. Open the HP Embedded Web Server (EWS):

a. **2-line control panels:** On the printer control panel, press the button. Open the **Network Setup** menu, and then select **Show IP Address** to display the IP address or host name.

   Touchscreen control panels: From the Home screen on the printer control panel, touch the Connection Information button, and then touch the Network Connected button or the Network Wi-Fi ON button to display the IP address or host name.

b. Open a web browser, and in the address line, type the IP address or host name exactly as it displays on the printer control panel. Press the Enter key on the computer keyboard. The EWS opens.

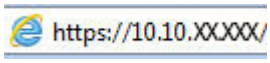

NOTE: If the web browser displays a message indicating that accessing the website might not be safe, select the option to continue to the website. Accessing this website will not harm the computer.

2. Click the **Networking** tab to obtain network information. Change settings as needed.

Rename the printer on a network

To rename the printer on a network so that it can be uniquely identified, use the HP Embedded Web Server.

NOTE: The steps vary according to the type of control panel.

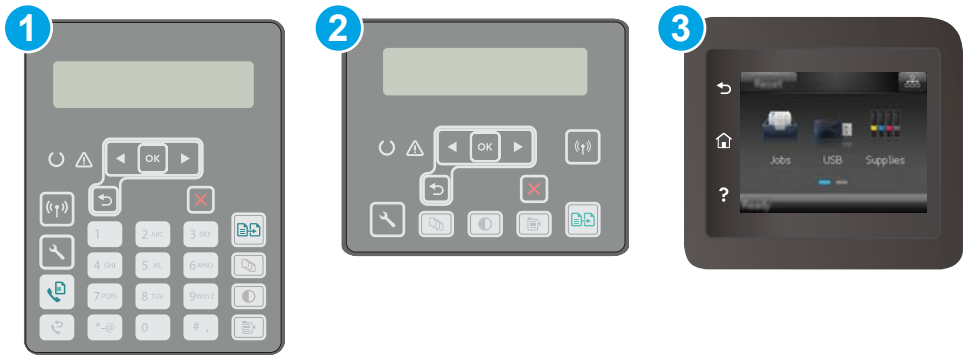

1	2-line control panel (fax models)
2	2–line control panel
3	Touchscreen control panel

1. Open the HP Embedded Web Server (EWS):

   a. **2-line control panels:** On the printer control panel, press the button. Open the **Network Setup** menu, and then select **Show IP Address** to display the IP address or host name.

   Touchscreen control panels: From the Home screen on the printer control panel, touch the Connection Information button, and then touch the Network Connected button or the Network Wi-Fi ON button to display the IP address or host name.

b. Open a web browser, and in the address line, type the IP address or host name exactly as it displays on the printer control panel. Press the Enter key on the computer keyboard. The EWS opens.

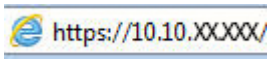

NOTE: If the web browser displays a message indicating that accessing the website might not be safe, select the option to continue to the website. Accessing this website will not harm the computer.

2. Open the **System** tab.

3. On the **Device Information** page, the default printer name is in the **Device Description** field. You can change this name to uniquely identify this printer.

NOTE: Completing the other fields on this page is optional.

4. Click the **Apply** button to save the changes.

Manually configure IPv4 TCP/IP parameters from the control panel

Use the control-panel menus to manually set an IPv4 address, subnet mask, and default gateway.

NOTE: The steps vary according to the type of control panel.

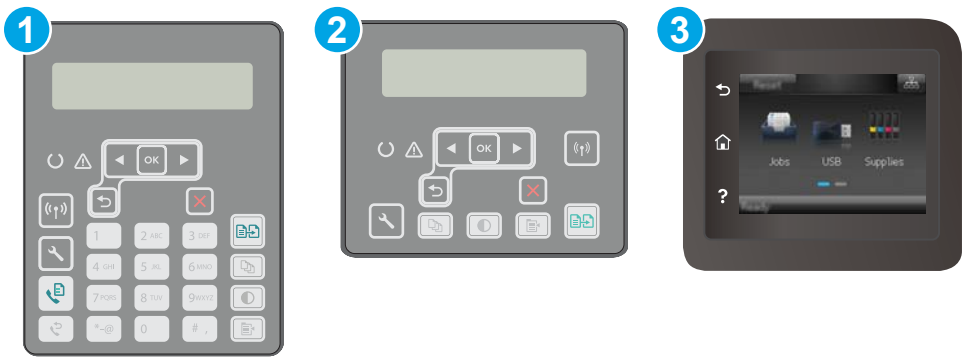

1	2-line control panel (fax models)
2	2–line control panel
3	Touchscreen control panel

2-line control panels

1. On the printer control panel, press the button.

2. Open the following menus:

   - **Network Setup**
   - **IPv4 Config Method**
   - **Manual**

3. Use the arrow keys and the OK button to enter the IP address, subnet mask, and default gateway, and then touch the OK button to save the changes.

Touchscreen control panels

1. From the Home screen on the printer control panel, touch the Setup button.
2. Scroll to and touch the Network Setup menu.
3. Touch the IPv4 Config Method menu, and then touch the Manual button.
4. Use the keypad on the touchscreen to enter the IP address, and touch the OK button. Touch the Yes button to confirm.
5. Use the keypad on the touchscreen to enter the subnet mask, and touch the OK button. Touch the Yes button to confirm.
6. Use the keypad on the touchscreen to enter the default gateway, and touch the OK button. Touch the Yes button to confirm.

Link speed and duplex settings

NOTE: This information applies only to Ethernet networks. It does not apply to wireless networks.

The link speed and communication mode of the print server must match the network hub. For most situations, leave the printer in automatic mode. Incorrect changes to the link speed and duplex settings might prevent the printer from communicating with other network devices. To make changes, use the printer control panel.

NOTE: The printer setting must match the setting for the network device (a network hub, switch, gateway, router, or computer).

NOTE: Making changes to these settings causes the printer to turn off and then on. Make changes only when the printer is idle.

NOTE: The steps vary according to the type of control panel.

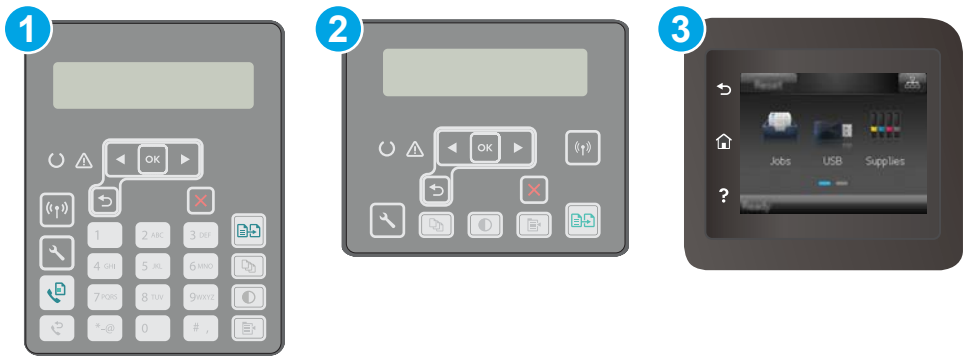

1	2-line control panel (fax models)
2	2–line control panel
3	Touchscreen control panel

1. **2-line control panels:** On the printer control panel, press the button.

   Touchscreen control panels: From the Home screen on the printer control panel, swipe until the Setup menu displays. Touch the Setup icon to open the menu.

2. Open the following menus:

   - Network Setup
   - Link Speed

3. Select one of the following options:

   - Automatic: The print server automatically configures itself for the highest link speed and communication mode allowed on the network.
   - 10T Full: 10 megabytes per second (Mbps), full-duplex operation
   - 10T Half: 10 Mbps, half-duplex operation
   - 100TX Full: 100 Mbps, full-duplex operation
   - 100TX Half: 100 Mbps, half-duplex operation
   - 1000T Full: 1000 Mbps, full-duplex operation

4. Touch the Save button, or press the OK button. The printer turns off and then on.

Printer security features

Introduction

The printer includes several security features to restrict who has access to configuration settings, to secure data, and to prevent access to valuable hardware components.

- Assign or change the system password using the Embedded Web Server
- Lock the formatter

Assign or change the system password using the Embedded Web Server

Assign an administrator password for access to the printer and the HP Embedded Web Server so that unauthorized users cannot change the printer settings.

NOTE: The steps vary according to the type of control panel.

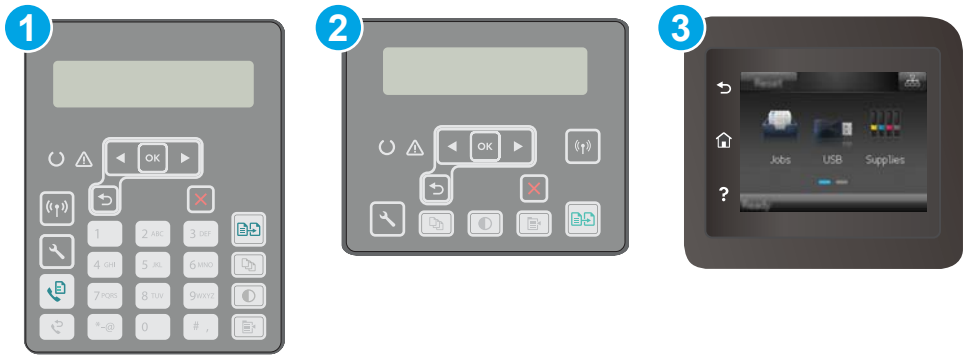

1	2–line control panel (fax models)
2	2-line control panel
3	Touchscreen control panel

1. Open the HP Embedded Web Server (EWS):

   a. **2-line control panels:** On the printer control panel, press the button. Open the **Network Setup** menu, and then select **Show IP Address** to display the IP address or host name.

      Touchscreen control panels: From the Home screen on the printer control panel, touch the Connection Information / button, and then touch the Network Connected button or the Network Wi-Fi ON button to display the IP address or host name.

b. Open a web browser, and in the address line, type the IP address or host name exactly as it displays on the printer control panel. Press the Enter key on the computer keyboard. The EWS opens.

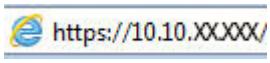

NOTE: If the web browser displays a message indicating that accessing the website might not be safe, select the option to continue to the website. Accessing this website will not harm the computer.

2. On the **System** tab, click the **Administration** link in the left navigation pane.
3. In the area labeled **Product Security**, enter the password in the **Password** field.
4. Re-enter the password in the **Confirm Password** field.
5. Click the **Apply** button.

NOTE: Make note of the password and store it in a safe place.

Lock the formatter

The formatter has a slot that you can use to attach a security cable. Locking the formatter prevents someone from removing valuable components from it.

Configure the Quiet Print Mode settings

Introduction

This printer has a quiet mode that reduces noise during printing. When quiet mode is turned on, the printer prints at a slower speed.

NOTE: Quiet Print Mode reduces the printer print speed, which might improve print quality.

Use one of the following methods to configure the Quiet Print Mode setting.

Method one: Configure the Quiet Print Mode settings from the printer control panel

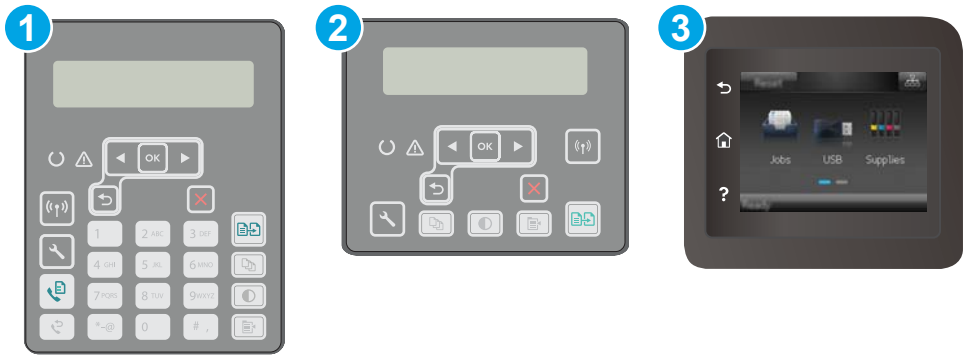

1	2–line control panel (fax models)
2	2-line control panel
3	Touchscreen control panel

1. **2-line control panels:** On the printer control panel, press the Setup button.

   Touchscreen control panels: From the Home screen on the printer control panel, swipe until the Setup menu displays. Touch the Setup icon to open the menu.

2. Open the following menus:

   - System Setup
   - Quiet Print Mode

3. **2-line control panels:** Select **On**, and then press OK.

   Touchscreen control panels: Touch On.

Method two: Configure the Quiet Print Mode settings from HP Embedded Web Server (EWS)

NOTE: The steps vary according to the type of control panel.



1	2–line control panel (fax models)
2	2-line control panel
3	Touchscreen control panel

1. **2-line control panels:** On the printer control panel, press the Setup button. Open the **Network Setup** menu, and then select **Show IP Address** to display the IP address or host name.

   Touchscreen control panels: From the Home screen on the printer control panel, touch the Connection Information button.

2. Open a Web browser, and in the address line, type the IP address or host name exactly as it displays on the printer configuration page. Press the Enter key on the computer keyboard. The EWS opens.

   https://10.10.XXXXX/

   NOTE: If the Web browser displays a message indicating that accessing the website might not be safe, select the option to continue to the website. Accessing this website will not harm the computer.

3. Click the **System** tab.
4. On the left navigation pane, click the **Paper Types** link.
5. From the **Quiet Print Mode** drop-down, select **On**. Click **Apply**.

Energy-conservation settings

- Introduction
- Print with EconoMode
- Set the Sleep/Auto Off After Inactivity setting
- Set the Shut Down After Inactivity delay and configure the printer to use 1 watt or less of power
- Set the Delay Shut Down setting

Introduction

The printer includes several economy features to conserve energy and supplies.

Print with EconoMode

This printer has an EconoMode option for printing drafts of documents. Using EconoMode can use less toner. However, using EconoMode can also reduce print quality.

HP does not recommend the full-time use of EconoMode. If EconoMode is used full-time, the toner supply might outlast the mechanical parts in the toner cartridge. If print quality begins to degrade and is no longer acceptable, consider replacing the toner cartridge.

NOTE: If this option is not available in your print driver, you can set it using the HP Embedded Web Server.

1. From the software program, select the **Print** option.
2. Select the printer, and then click the **Properties** or **Preferences** button.
3. Click the **Paper/Quality** tab.
4. Click the **EconoMode** check box.

Set the Sleep/Auto Off After Inactivity setting

Use the control panel menus to set the amount of idle time before the printer enters sleep mode.

Complete the following procedure to change the Sleep/Auto Off After setting:

NOTE: The steps vary according to the type of control panel.

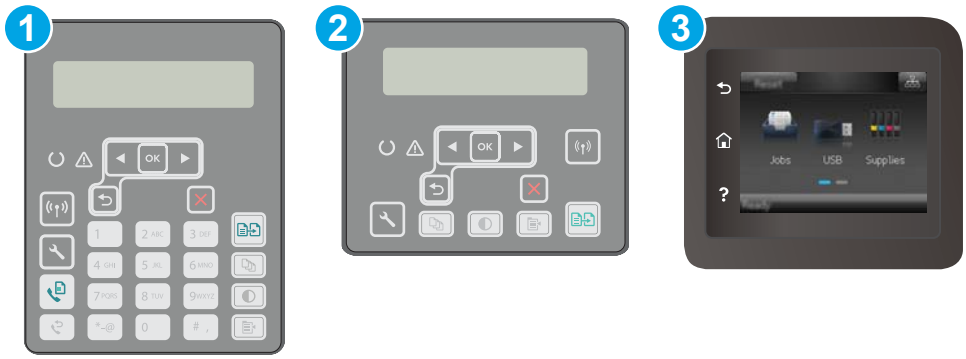

1	2–line control panel (fax models)

2	2-line control panel
3	Touchscreen control panel

1. **2-line control panels:** On the printer control panel, press the button.

   Touchscreen control panels: From the Home screen on the printer control panel, swipe until the Setup menu displays. Touch the Setup icon to open the menu.

2. Open the following menus:

   - System Setup
   - Energy Settings
   - Sleep/Auto Off After

3. **2-line control panels:** Use the arrow keys to select the time for the Sleep/Auto Off delay, and then press the OK button.

   Touchscreen control panels: Select the time for the Sleep/Auto Off After delay.

Set the Shut Down After Inactivity delay and configure the printer to use 1 watt or less of power

Use the control panel menus to set the amount of time before the printer shuts down.

NOTE: After the printer shuts down, the power consumption is 1 watt or less.

Complete the following procedure to change the Shut Down After Delay setting:

NOTE: The steps vary according to the type of control panel.

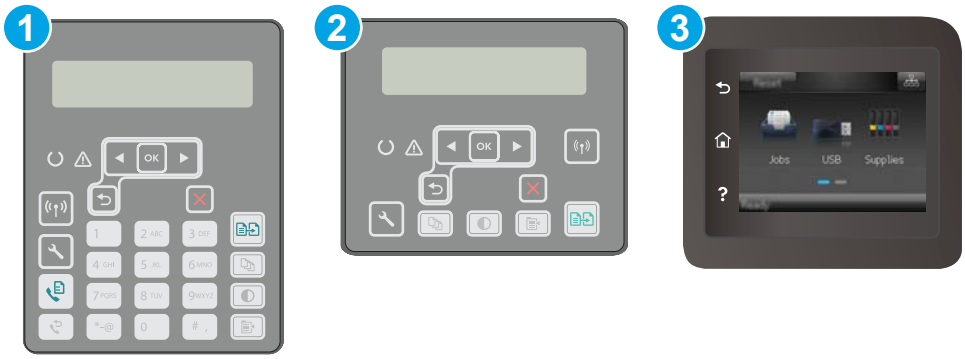

1	2–line control panel (fax models)
2	2-line control panel
3	Touchscreen control panel

1. **2-line control panels:** On the printer control panel, press the button.

   Touchscreen control panels: From the Home screen on the printer control panel, swipe until the Setup menu displays. Touch the Setup icon to open the menu.

2. Open the following menus:

   - System Setup
   - Energy Settings
   - Shut Down After

3. Select the time for the Shut Down After delay.

NOTE: The default value is 4 hours.

Set the Delay Shut Down setting

Use the control panel menus to select whether or not the printer delays shutting down after the power button is pressed.

Complete the following procedure to change the Delay Shut Down setting:

NOTE: The steps vary according to the type of control panel.

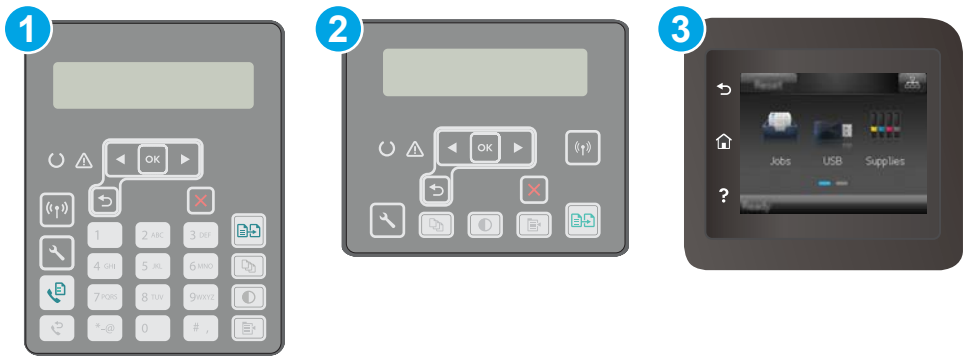

1	2–line control panel (fax models)
2	2-line control panel
3	Touchscreen control panel

1. **2-line control panels:** On the printer control panel, press the button.

   Touchscreen control panels: From the Home screen on the printer control panel, swipe until the Setup menu displays. Touch the Setup icon to open the menu.

2. Open the following menus:

- System Setup
- Energy Settings
- Delay Shut Down

3. Select one of the delay options:
   - No Delay: The printer shuts down after a period of inactivity determined by the Shut Down After setting.
   - When Ports Are Active: When this option is selected the printer will not shut down unless all ports are inactive. An active network link or fax connection will prevent the printer from shutting down.

Update the firmware

HP offers periodic printer updates, new Web Services apps, and new features to existing Web Services apps. Follow these steps to update the printer firmware for a single printer. When you update the firmware, Web Service apps will update automatically.

There are two supported methods to perform a firmware update on this printer. Use only one of the following methods to update the printer firmware.

Method one: Update the firmware using the control panel

Use these steps to load the firmware from the control panel (for network-connected printers only), and/or set the printer to automatically load future firmware updates. For USB-connected printers, skip to method two.

NOTE: The steps vary according to the type of control panel.

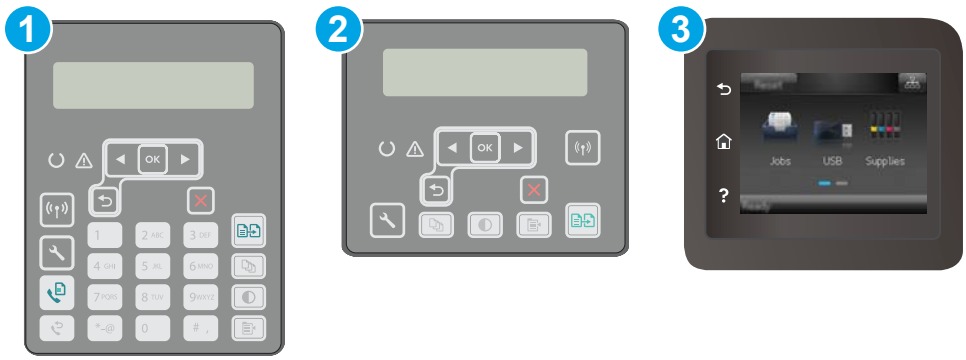

1	2–line control panel (fax models)
2	2-line control panel
3	Touchscreen control panel

2-line control panels:

1. Make sure the printer is connected to a wired (Ethernet) or wireless network with an active Internet connection.

   NOTE: The printer must be connected to the internet to update the firmware via a network connection.

2. On the printer control panel, press the Setup button.
3. Open the **Service** menu, and then open the **LaserJet Update** menu.

   NOTE: If the **LaserJet Update** option is not listed, use method two.

4. Select **Check for Update** to check for updates.

   NOTE: The printer automatically checks for an update, and if a newer version is detected, the update process automatically starts.

5. Set the printer to automatically update the firmware when updates become available.

   On the printer control panel, press the Setup button.

Open the **Service** menu, open the **LaserJet Update** menu, and then select the **Manage Updates** menu.

Set the **Allow Updates** option to **YES**, and then set the **Automatic Check** option to **ON**.

Touchscreen control panels:

1. Make sure the printer is connected to a wired (Ethernet) or wireless network with an active Internet connection.

   NOTE: The printer must be connected to the internet to update the firmware via a network connection.

2. From the Home screen on the printer control panel, touch the Setup button.
3. Scroll to and open the Service menu, and then open the LaserJet Update menu.

   NOTE: If the LaserJet Update option is not listed, use method two.

4. Touch Check for Updates Now to check for updates.

   NOTE: The printer automatically checks for an update, and if a newer version is detected, the update process automatically starts.

5. Set the printer to automatically update the firmware when updates become available.

   From the Home screen on the printer control panel, touch the Setup button.

   Open the Service menu, open the LaserJet Update menu, and then select the Manage Updates menu.

   Set the Allow Updates option to YES, and then set the Check automatically option to ON.

Method two: Update the firmware using the Firmware Update Utility

Use these steps to manually download and install the Firmware Update Utility from HP.com.

NOTE: This method is the only firmware update option available for printers connected to the computer via a USB cable. It also works for printers connected to a network.

NOTE: You must have a print driver installed in order to use this method.

1. Go to www.hp.com/support, select your country/region language, click **Get software and drivers** link, type the printer name in the search field, press the Enter button, and then select the printer from the list of search results.
2. Select the operating system.
3. Under the **Firmware** section, locate the **Firmware Update Utility**.
4. Click **Download**, click **Run**, and then click **Run** again.
5. When the utility launches, select the printer from the drop-down list, and then click **Send Firmware**.

   NOTE: To print a configuration page to verify the installed firmware version before or after the update process, click **Print Config**.

6. Follow the on-screen instructions to complete the installation, and then click the **Exit** button to close the utility.

9 Solve problems

- Customer support
- Control panel help system (touchscreen models only)
- Restore the factory-set defaults
- A “Cartridge is low” or “Cartridge is very low” message displays on the printer control panel
- Printer does not pick up paper or misfeeds
- Clear paper jams
- Clean the ADF replaceable film assembly
- Improve print quality
- Improve copy and scan image quality
- Improve fax image quality
- Solve wired network problems
- Solve wireless network problems
- Solve fax problems

For more information:

The following information is correct at the time of publication. For current information, see www.hp.com/support/ljM148MFP, www.hp.com/support/ljM227MFP.

HP's all-inclusive help for the printer includes the following information:

- Install and configure
- Learn and use
- Solve problems
- Download software and firmware updates
- Join support forums
- Find warranty and regulatory information

Customer support

Get telephone support for your country/region Have the printer name, serial number, date of purchase, and problem description ready	Country/region phone numbers are on the flyer that was in the box with the printer or at support.hp.com.
Get 24-hour Internet support, and download software utilities and drivers	www.hp.com/support/ljM148MFP, www.hp.com/support/ljM227MFP
Order additional HP service or maintenance agreements	www.hp.com/go/carepack
Register the printer	www.register.hp.com

Control panel help system (touchscreen models only)

The printer has a built-in Help system that explains how to use each screen. To open the Help system, touch the Help ? button in the lower-left corner of the screen.



For some screens, the Help opens to a global menu where you can search for specific topics. You can browse through the menu structure by touching the buttons in the menu.

Some Help screens include animations that guide you through procedures, such as clearing jams.

For screens that contain settings for individual jobs, the Help opens to a topic that explains the options for that screen.

If the printer alerts you of an error or warning, touch the Help ? button to open a message that describes the problem. The message also contains instructions to help solve the problem.

Restore the factory-set defaults

Restoring the factory-set defaults returns all of the printer and network settings to the factory defaults. It will not reset the page count, or tray size. To restore the printer to the factory-default settings, follow these steps.

CAUTION: Restoring the factory-set defaults returns all of the settings to the factory defaults, and it also deletes any pages that are stored in the memory.

NOTE: The steps vary according to the type of control panel.



1	2–line control panel (fax models)
2	2-line control panel
3	Touchscreen control panel

1. **2-line control panels:** On the printer control panel, press the button.

   Touchscreen control panels: From the Home screen on the printer control panel, swipe until the Setup menu displays. Touch the Setup icon to open the menu.

2. Open the following menus:

   - Service
   - Restore Defaults

3. Touch or press the OK button.

   The printer automatically restarts.

A “Cartridge is low” or “Cartridge is very low” message displays on the printer control panel

Cartridge is low: The printer indicates when a cartridge level is low. Actual cartridge life remaining may vary. Consider having a replacement available to install when print quality is no longer acceptable. The cartridge does not need to be replaced now.

Cartridge is very low: The printer indicates when the cartridge level is very low. Actual cartridge life remaining may vary. Consider having a replacement available to install when print quality is no longer acceptable. The cartridge does not need to be replaced now unless the print quality is no longer acceptable.

Once an HP cartridge has reached **Very Low**, HP’s Premium Protection Warranty on that cartridge has ended.

Change the “Very Low” settings

You can change the way the printer reacts when supplies reach the Very Low state. You do not have to re-establish these settings when you install a new cartridge.

NOTE: The steps vary according to the type of control panel.

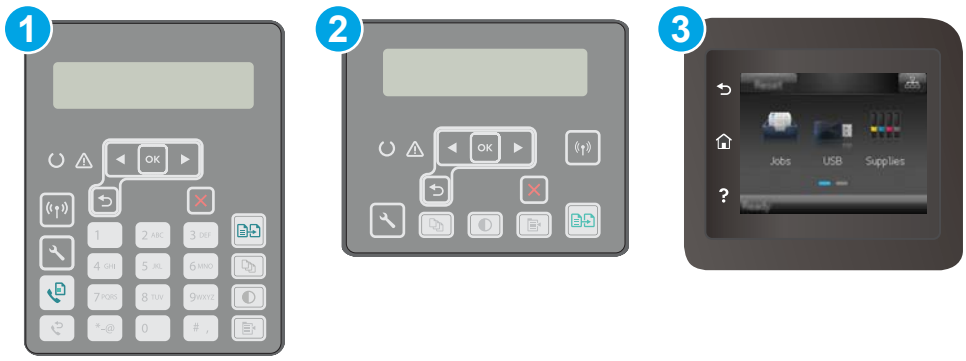

1	2–line control panel (fax models)
2	2-line control panel
3	Touchscreen control panel

1. **2-line control panels:** On the printer control panel, press the wrench button.

   Touchscreen control panels: From the Home screen on the printer control panel, swipe until the Setup menu displays. Touch the Setup icon to open the menu.

2. Open the following menus:
   - System Setup
   - Supply Settings
   - Black Cartridge or Color Cartridges
   - Very Low Setting
3. Select one of the following options:

- Select the Continue option to set the printer to alert you that the cartridge is very low, but to continue printing.
- Select the Stop option to set the printer to stop printing until you replace the cartridge.
- Select the Prompt option to set the printer to stop printing and prompt you to replace the cartridge. You can acknowledge the prompt and continue printing. A customer configurable option on this printer is "Prompt to Remind Me in 100 pages, 200 pages, 300 pages, 400 pages, or never." This option is provided as a customer convenience and is not an indication these pages will have acceptable print quality.

For printers with fax capability

When the printer is set to the Stop or Prompt option, there is some risk that faxes will not print when the printer resumes printing. This can occur if the printer has received more faxes than the memory can hold while the printer is waiting.

The printer can print faxes without interruption when it passes the Very Low threshold if you select the Continue option for the cartridge, but print quality might degrade.

Order supplies

Order supplies and paper	www.hp.com/go/suresupply
Order through service or support providers	Contact an HP-authorized service or support provider.
Order using the HP Embedded Web Server (EWS)	To access, in a supported web browser on your computer, enter the printer IP address or host name in the address/URL field. The EWS contains a link to the HP SureSupply website, which provides options for purchasing Original HP supplies.

Printer does not pick up paper or misfeeds

Introduction

The following solutions can help solve problems if the printer is not picking up paper from the tray or is picking up multiple sheets of paper at one time. Either of these situations can result in paper jams.

- The printer does not pick up paper
- The printer picks up multiple sheets of paper
- The document feeder jams, skews, or picks up multiple sheets of paper

The printer does not pick up paper

If the printer does not pick up paper from the tray, try these solutions.

1. Open the printer and remove any jammed sheets of paper. Verify that no torn remnants of paper remain inside the printer.
2. Load the tray with the correct size of paper for the job.
3. Make sure the paper size and type are set correctly on the printer control panel.
4. Make sure the paper guides in the tray are adjusted correctly for the size of paper. Adjust the guides to the appropriate indentation in the tray. The arrow on the tray guide should line up exactly with the marking on the tray.

NOTE: Do not adjust the paper guides tightly against the paper stack. Adjust them to the indentations or markings in the tray.

5. Verify that the humidity in the room is within specifications for this printer and that paper is being stored in unopened packages. Most reams of paper are sold in moisture-proof wrapping to keep paper dry.

   In high-humidity environments, paper at the top of the stack in the tray can absorb moisture, and it might have a wavy or uneven appearance. If this happens, remove the top 5 to 10 sheets of paper from the stack.

   In low-humidity environments, excess static electricity can cause sheets of paper to stick together. If this happens, remove the paper from the tray, and flex the stack by holding it at each end and bringing the ends up to form a U shape. Then, rotate the ends down to reverse the U shape. Next, hold each side of the stack of paper, and repeat this process. This process releases individual sheets without introducing static electricity. Straighten the paper stack against a table before returning it to the tray.

Figure 9-1 Technique for flexing the paper stack

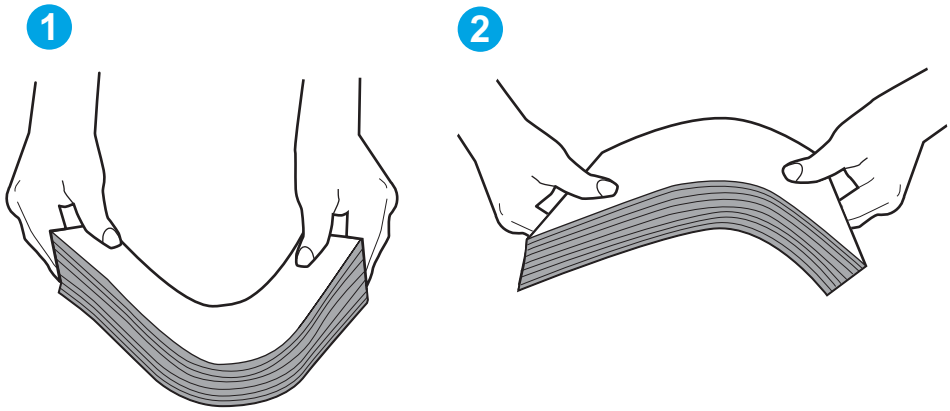

6. Check the printer control panel to see if it is displaying a prompt to feed the paper manually. Load paper, and continue.

7. The rollers above the tray might be contaminated. Clean the rollers with a lint-free cloth dampened with warm water. Use distilled water, if it is available.

CAUTION: Do not spray water directly on to the printer. Instead, spray water on the cloth or dab the cloth in water and wring it out before cleaning the rollers.

The printer picks up multiple sheets of paper

If the printer picks up multiple sheets of paper from the tray, try these solutions.

1. Remove the stack of paper from the tray and flex it, rotate it 180 degrees, and flip it over. *Do not fan the paper.* Return the stack of paper to the tray.

NOTE: Fanning the paper introduces static electricity. Instead of fanning the paper, flex the stack by holding it at each end and bringing the ends up to form a U shape. Then, rotate the ends down to reverse the U shape. Next, hold each side of the stack of paper, and repeat this process. This process releases individual sheets without introducing static electricity. Straighten the paper stack against a table before returning it to the tray.

Figure 9-2 Technique for flexing the paper stack

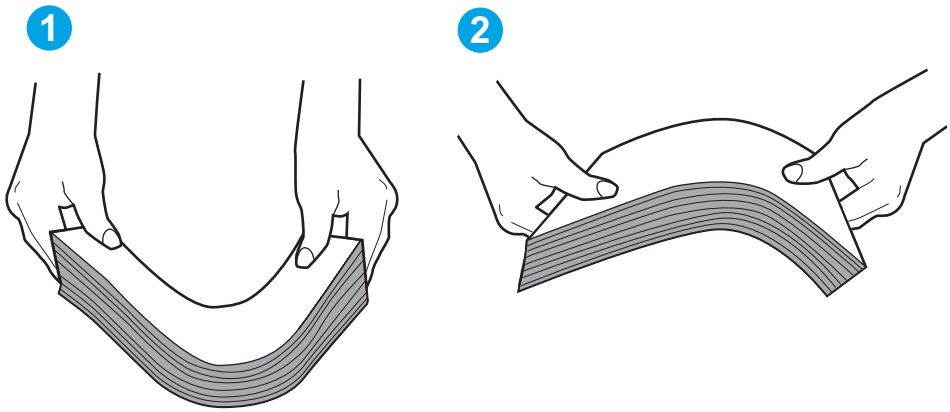

2. Use only paper that meets HP specifications for this printer.

3. Verify that the humidity in the room is within specifications for this printer, and that paper is being stored in unopened packages. Most reams of paper are sold in moisture-proof wrapping to keep paper dry.

   In high-humidity environments, paper at the top of the stack in the tray can absorb moisture, and it might have a wavy or uneven appearance. If this happens, remove the top 5 to 10 sheets of paper from the stack.

   In low-humidity environments, excess static electricity can cause sheets of paper to stick together. If this happens, remove the paper from the tray, and flex the stack as described above.

4. Use paper that is not wrinkled, folded, or damaged. If necessary, use paper from a different package.

5. Make sure the tray is not overfilled by checking the stack-height markings inside the tray. If it is overfilled, remove the entire stack of paper from the tray, straighten the stack, and then return some of the paper to the tray.

6. Make sure the paper guides in the tray are adjusted correctly for the size of paper. Adjust the guides to the appropriate indentation in the tray. The arrow on the tray guide should line up exactly with the marking on the tray.

NOTE: Do not adjust the paper guides tightly against the paper stack. Adjust them to the indentations or markings in the tray.

7. Make sure the printing environment is within recommended specifications.

The document feeder jams, skews, or picks up multiple sheets of paper

NOTE: This information applies to MFP printers only.

- The original might have something on it, such as staples or self-adhesive notes, that must be removed.
- Check that all rollers are in place and that the roller-access cover inside the document feeder is closed.
- Make sure that the top document-feeder cover is closed.
- The pages might not be placed correctly. Straighten the pages and adjust the paper guides to center the stack.
- The paper guides must be touching the sides of the paper stack to work correctly. Make sure that the paper stack is straight and the guides are against the paper stack.
- The document feeder input tray or output bin might contain more than the maximum number of pages. Make sure the paper stack fits below the guides in the input tray, and remove pages from the output bin.
- Verify that there are no pieces of paper, staples, paper clips, or other debris in the paper path.
- Clean the document-feeder rollers and the separation pad. Use compressed air or a clean, lint-free cloth moistened with warm water. If misfeeds still occur, replace the rollers.
- From the Home screen on the printer control panel, scroll to and touch the Supplies button. Check the status of the document-feeder kit, and replace it if necessary.

Clear paper jams

Introduction

The following information includes instructions for clearing paper jams from the product.

- Jam locations
- Experiencing frequent or recurring paper jams?
- Clear jams in the document feeder
- Clear jams in the Main input tray
- Clear jams in the toner-cartridge area
- Clear jams in the output bin
- Clear jams in the duplexer

Jam locations

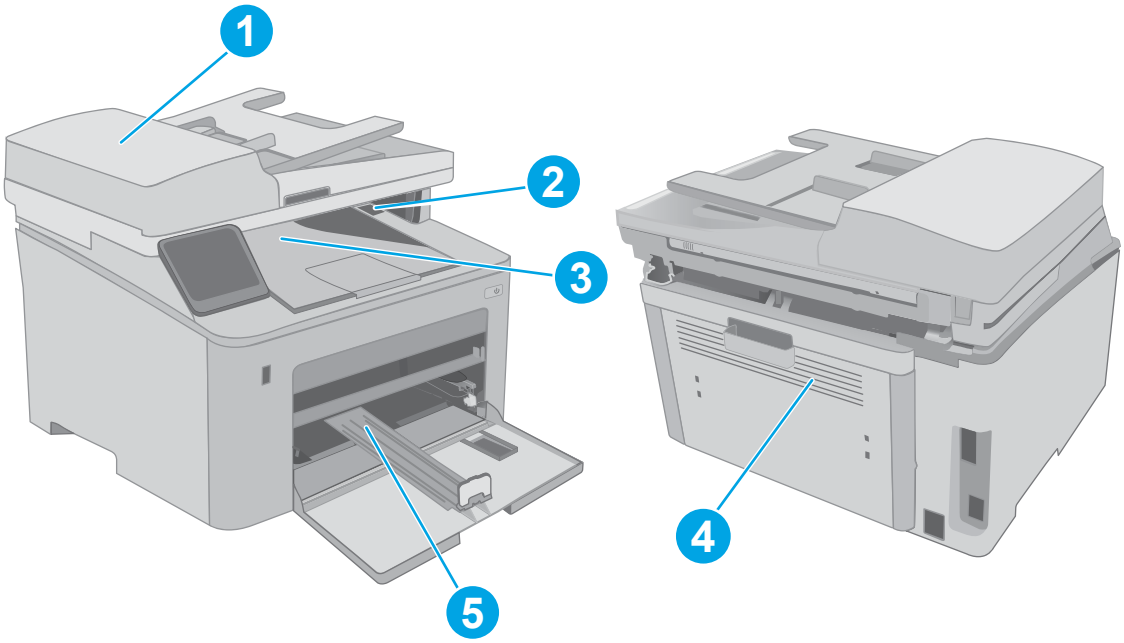

1	Document feeder
2	Cartridge area
3	Output bin
4	Duplexer
5	Main input tray

Experiencing frequent or recurring paper jams?

Follow these steps to solve problems with frequent paper jams. If the first step does not resolve the problem continue with the next step until you have resolved the problem.

NOTE: The steps vary according to the type of control panel.

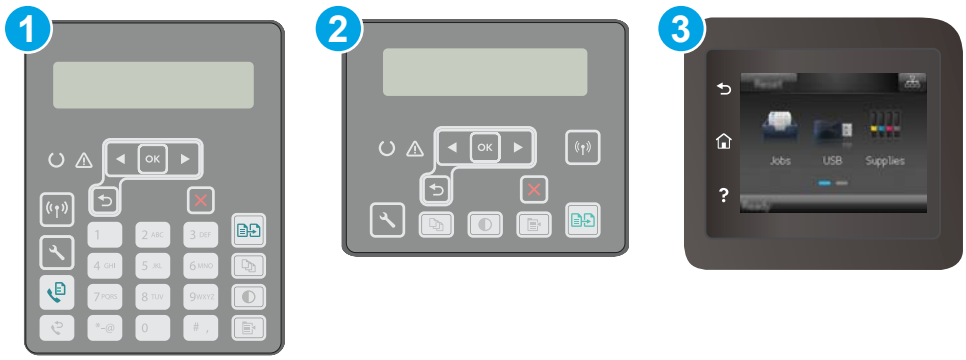

1	2–line control panel (fax models)
2	2-line control panel
3	Touchscreen control panel

1. If paper has jammed in the printer, clear the jam and then print a configuration page to test the printer.
2. Check that the tray is configured for the correct paper size and type on the printer control panel. Adjust paper settings if necessary.
   a. **2-line control panels:** On the printer control panel, press the wrench button.

      Touchscreen control panels: From the Home screen on the printer control panel, swipe until the Setup menu displays. Touch the Setup icon to open the menu.
   b. Open the following menus:
      - System Setup
      - Paper setup
   c. Select the tray from the list.
   d. Select Paper Type and then select the type of paper that is in the tray.
   e. Select Paper Size and then select the size of paper that is in the tray.
3. Turn the printer off, wait 30 seconds, and then turn it on again.
4. Print a cleaning page to remove excess toner from inside the printer.
   a. **2-line control panels**: On the printer control panel, press the wrench button.

      Touchscreen control panels: From the Home screen on the printer control panel, swipe until the Setup menu displays. Touch the Setup icon to open the menu.
   b. Open the Service menu.

c. Select the Cleaning Page option.

d. Load plain letter or A4 paper when you are prompted.

   Wait until the process is complete. Discard the page that prints.

5. Print a configuration page to test the printer.

   a. **2-line control panels**: On the printer control panel, press the button.

      Touchscreen control panels: From the Home screen on the printer control panel, swipe until the Setup menu displays. Touch the Setup icon to open the menu.

   b. Open the Reports menu.

   c. Select Configuration Report.

If none of these steps resolves the problem, the printer might need service. Contact HP customer support.

Clear jams in the document feeder

The following information describes how to clear paper jams in the document feeder. When a jam occurs, 2-line control panel displays an error message and the touchscreen control panel displays an animation that assists in clearing the jam.

1. Remove any paper from the document feeder input tray.
2. Remove any jammed paper visible in the input tray area. Use both hands to slowly pull out the jammed paper to avoid tearing the paper.

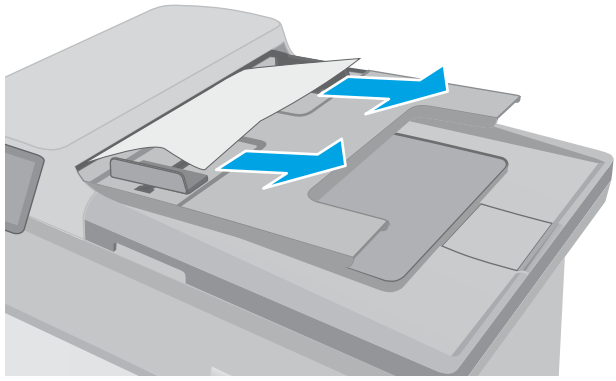

3. Open the document-feeder cover.

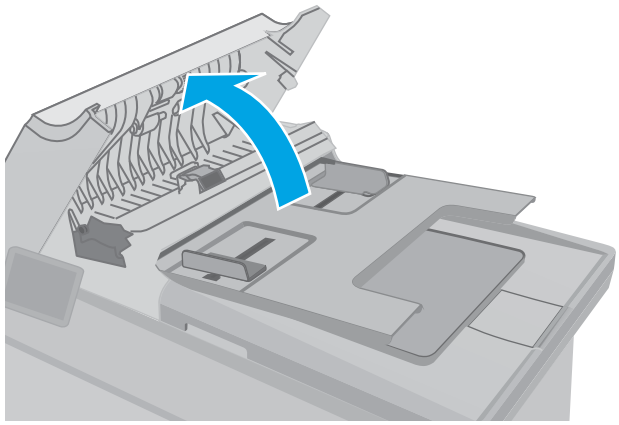

4. Remove any jammed paper.

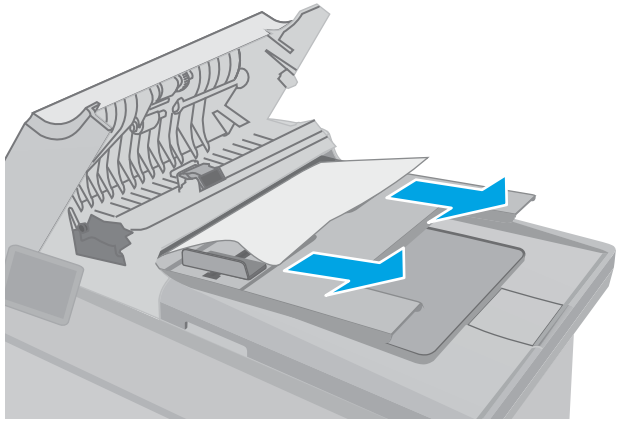

5. Close the document-feeder cover. Make sure it is completely closed.

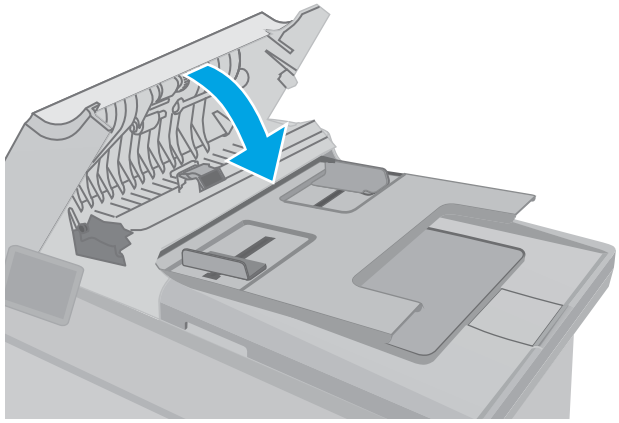

6. Open the scanner lid. If paper is jammed behind the white plastic backing, gently pull it out.

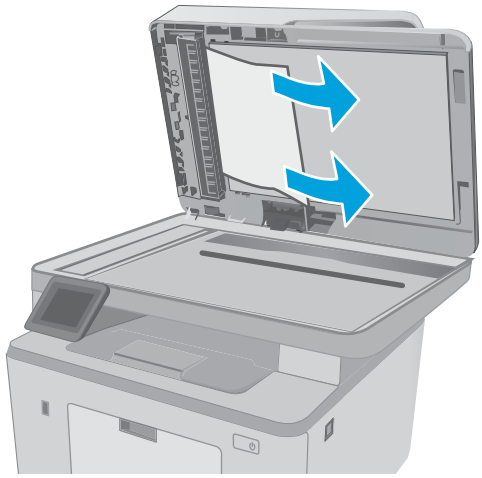

7. Lower the scanner lid.



NOTE: To avoid jams, make sure the guides in the document-feeder input tray are adjusted tightly against the document. Remove all staples and paper clips from original documents.

NOTE: Original documents that are printed on heavy, glossy paper can jam more frequently than originals that are printed on plain paper.

Clear jams in the Main input tray

Use the following procedure to check for paper in all possible jam locations in the Main input tray. When a jam occurs, 2-line control panel displays an error message and the touchscreen control panel displays an animation that assists in clearing the jam.

1. Slowly pull the jammed paper out of the printer.

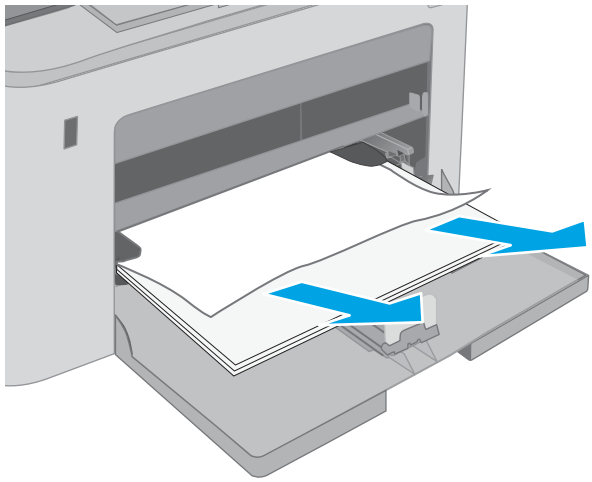

2. Lift the scanner assembly.

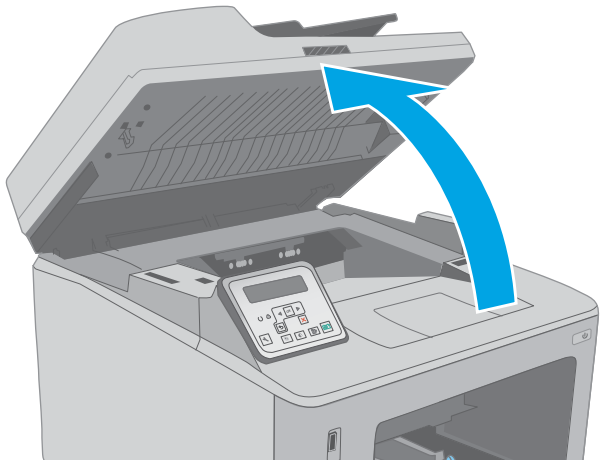

3. Open the cartridge door.

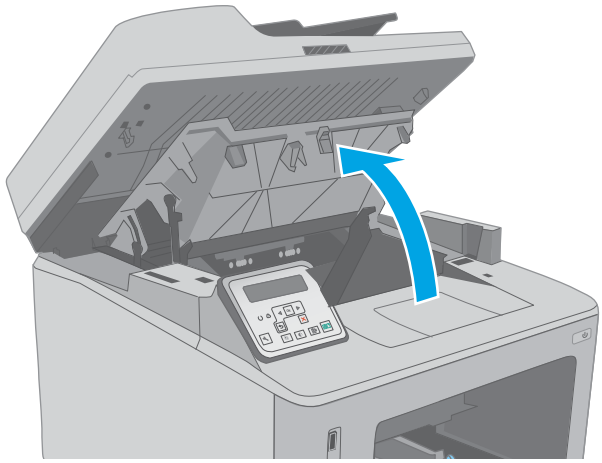

4. Remove the toner cartridge from the printer.

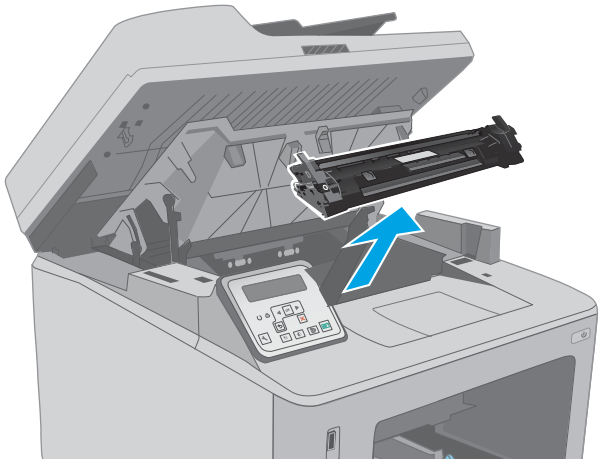

5. Remove the imaging drum from the printer.

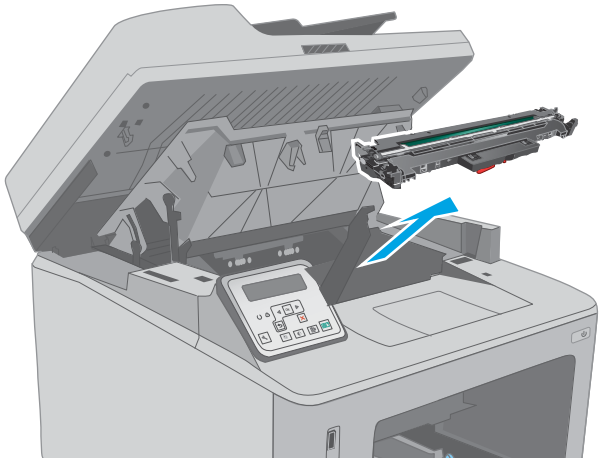

6. Remove any jammed paper from the toner-cartridge area. Use both hands to remove jammed paper to avoid tearing the paper.

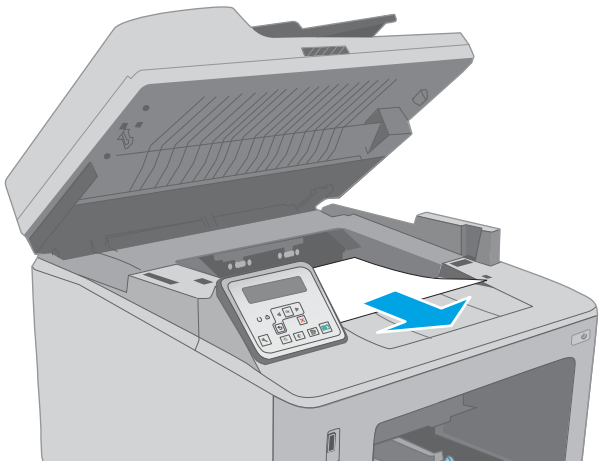

7. Pull out the green tab to release the jam-access cover.

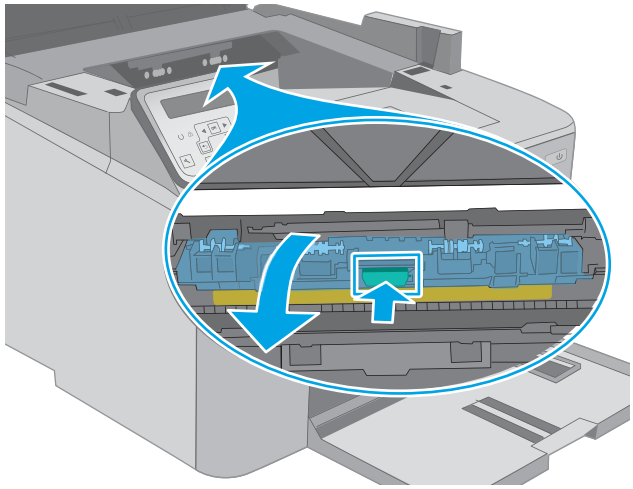

8. Remove any jammed paper.

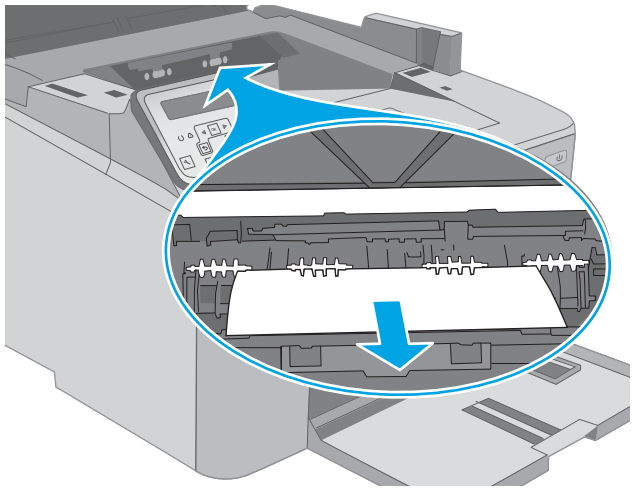

9. Close the jam-access cover.

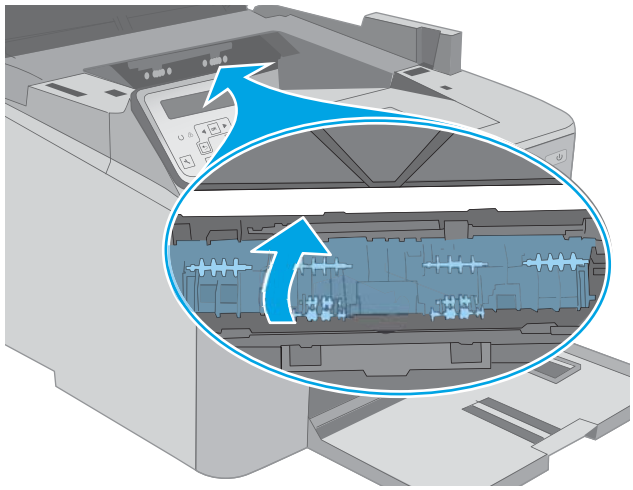

10. Align the imaging drum with the tracks inside the printer, and install the imaging drum until it is firmly seated.

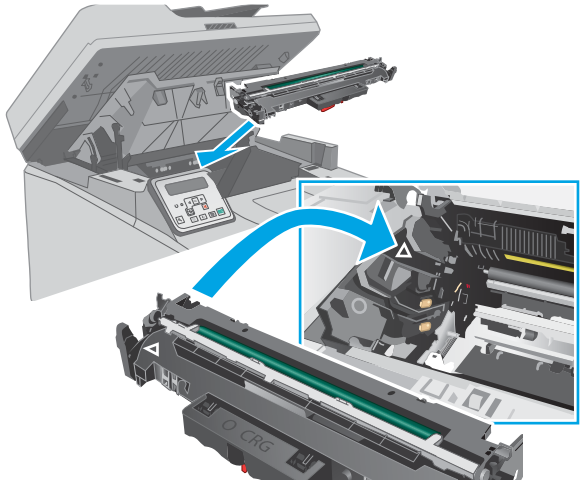

11. Align the toner cartridge with the tracks inside the printer, and install the toner cartridge until it is firmly seated.

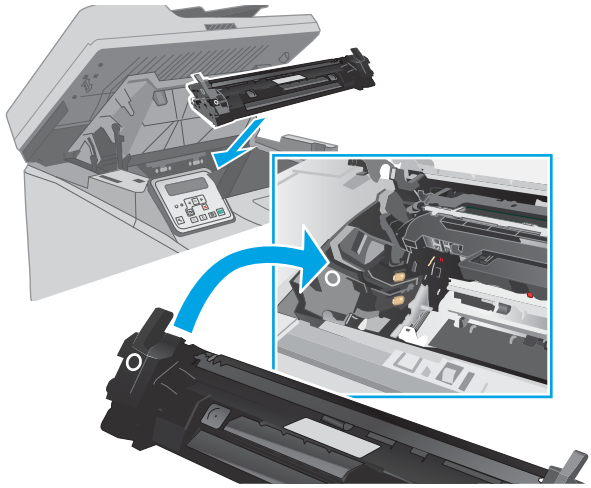

12. Close the cartridge door.

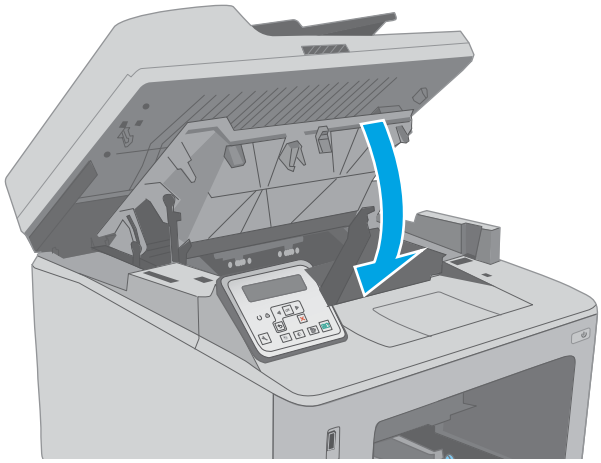

13. Lower the scanner assembly.

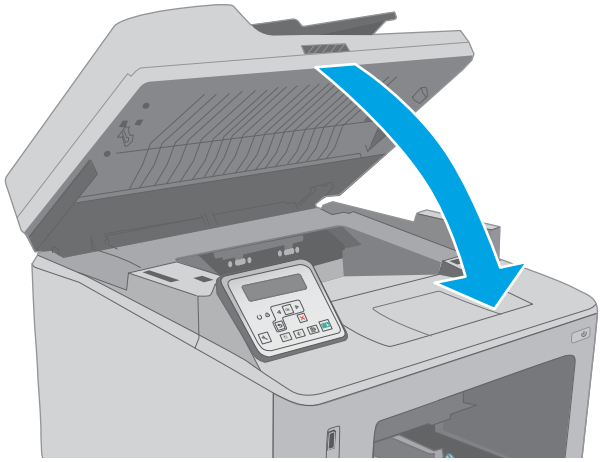

Clear jams in the toner-cartridge area

The following information describes how to clear paper jams in the toner-cartridge area. When a jam occurs, 2-line control panel displays an error message and the touchscreen control panel displays an animation that assists in clearing the jam.

1. Lift the scanner assembly.

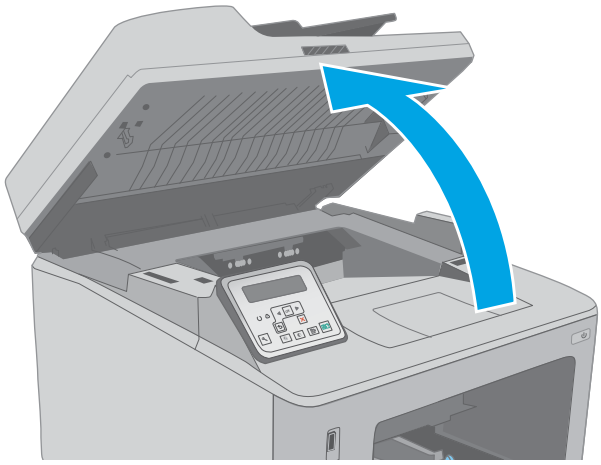

2. Open the cartridge door.

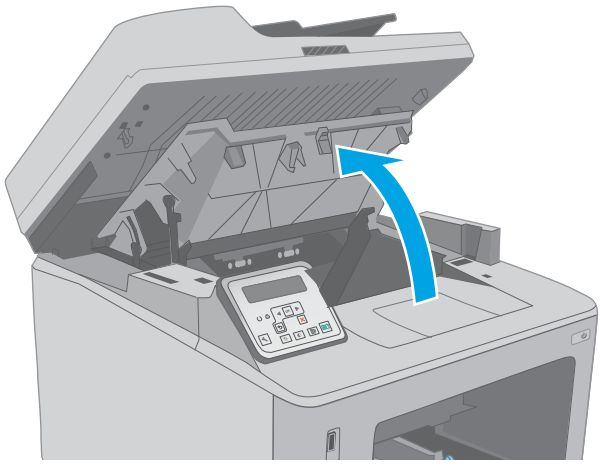

3. Remove the toner cartridge from the printer.

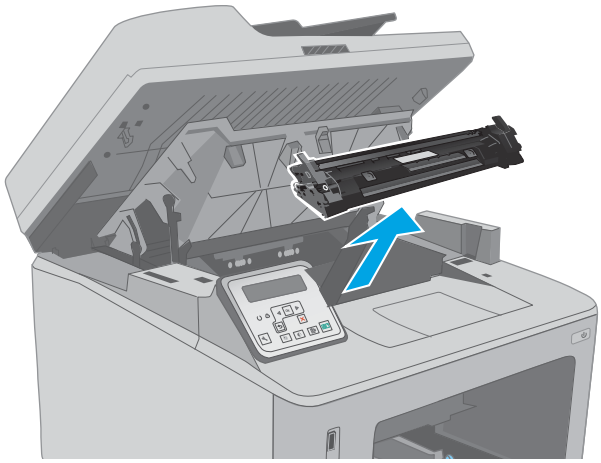

4. Remove the imaging drum from the printer.

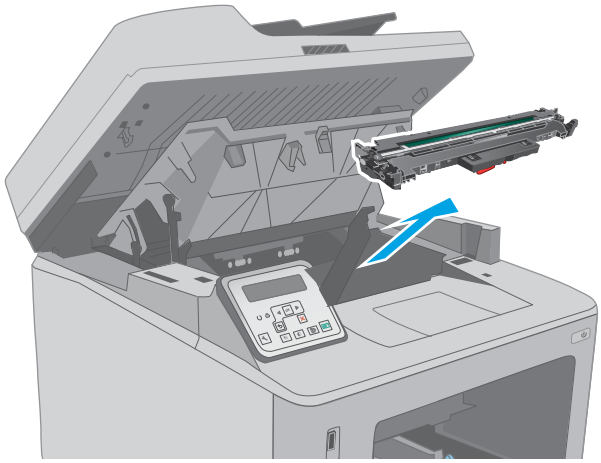

5. Remove any jammed paper from the toner-cartridge area. Use both hands to remove jammed paper to avoid tearing the paper.

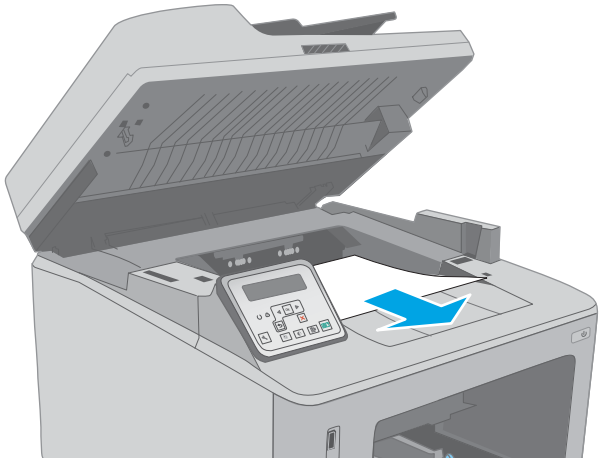

6. Pull out the green tab to release the jam-access cover.

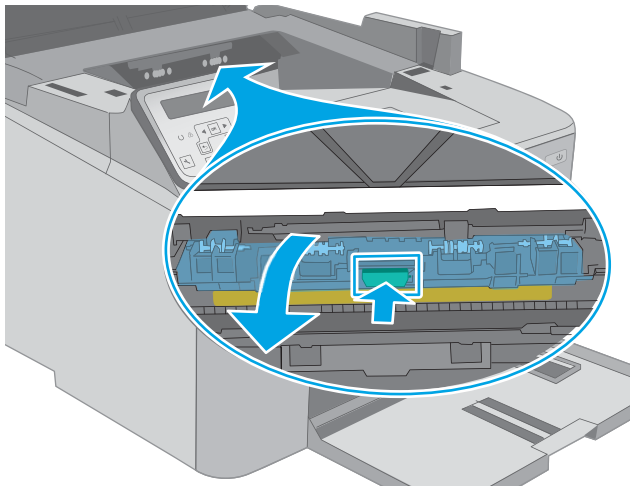

7. Remove any jammed paper.

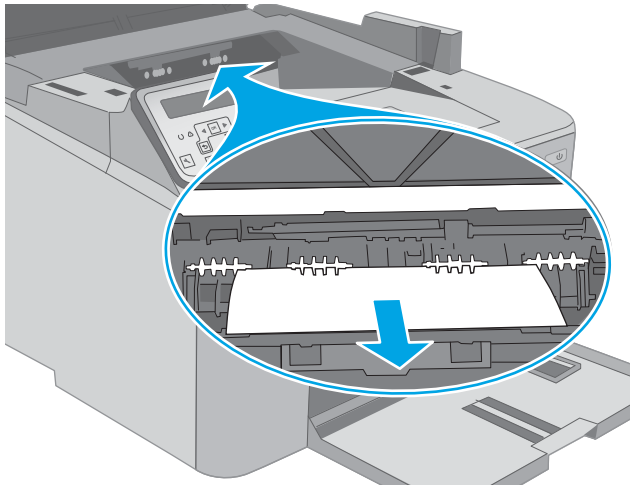

8. Close the jam-access cover.

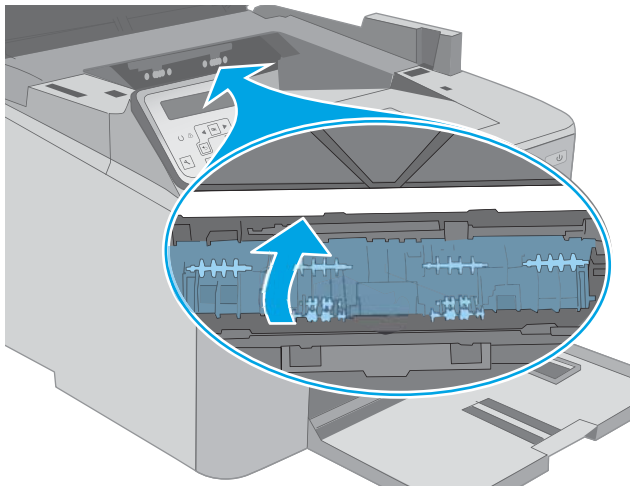

9. Align the imaging drum with the tracks inside the printer, and install the imaging drum until it is firmly seated.

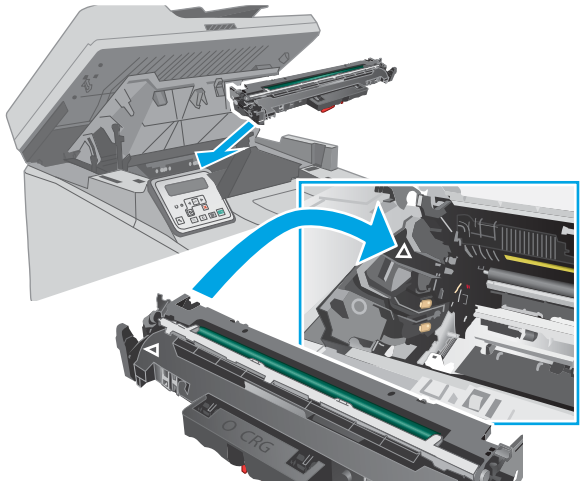

10. Align the toner cartridge with the tracks inside the printer, and install the toner cartridge until it is firmly seated.

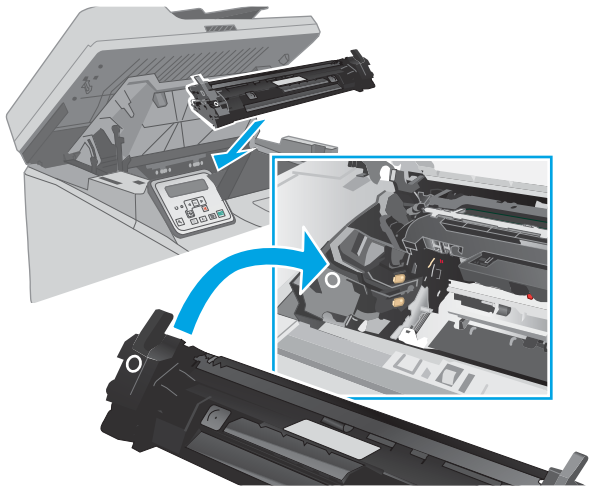

11. Close the cartridge door.

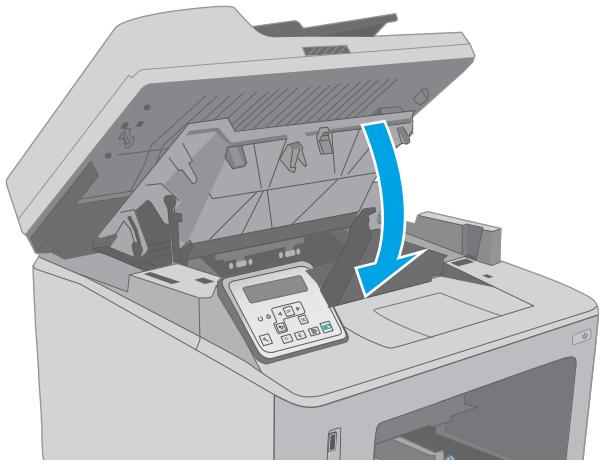

12. Lower the scanner assembly.

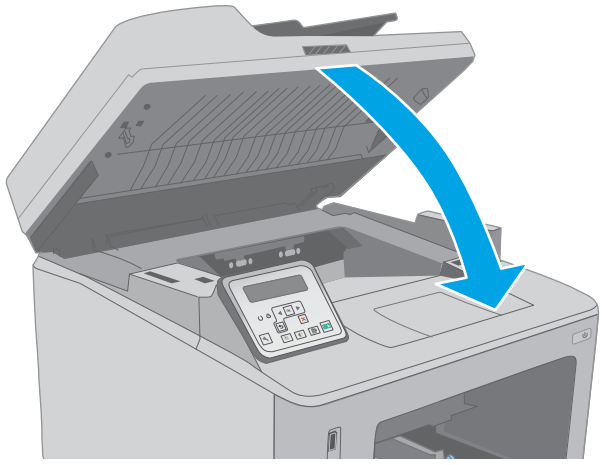

Clear jams in the output bin

Use the following procedure to check for paper in all possible jam locations in the output bin. When a jam occurs, 2-line control panel displays an error message and the touchscreen control panel displays an animation that assists in clearing the jam.

1. If paper is visible in the output bin, grasp the leading edge and remove it.



2. Lift the scanner assembly.

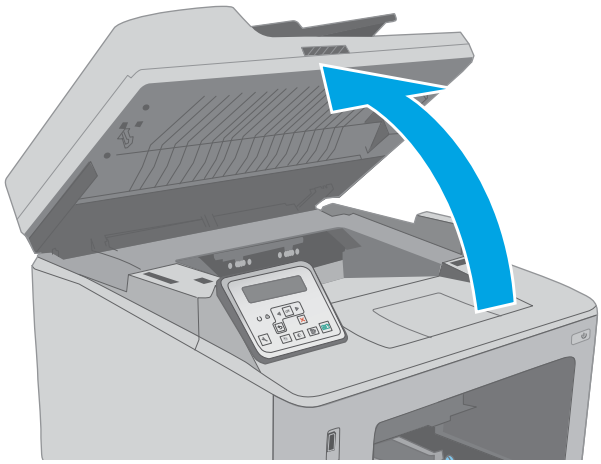

3. Open the cartridge door.

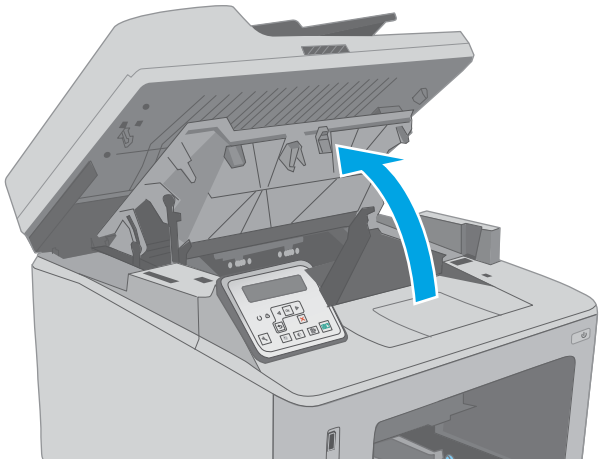

4. Pull out the green tab to release the jam-access cover.

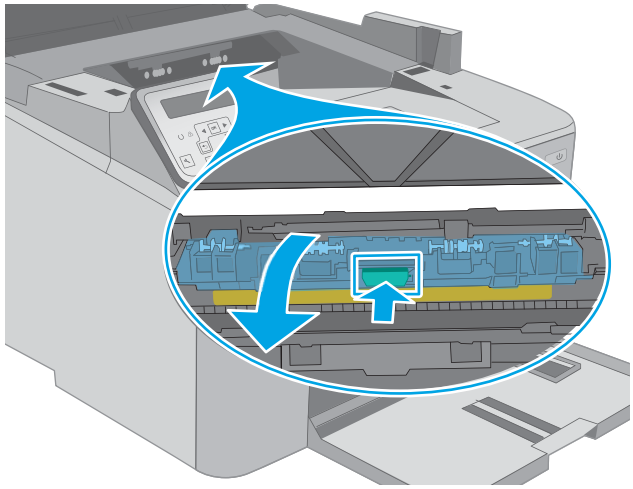

5. Remove any jammed paper.

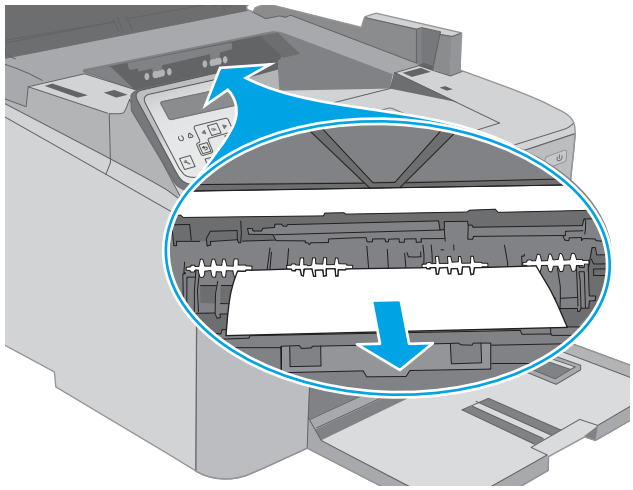

6. Close the jam-access cover.

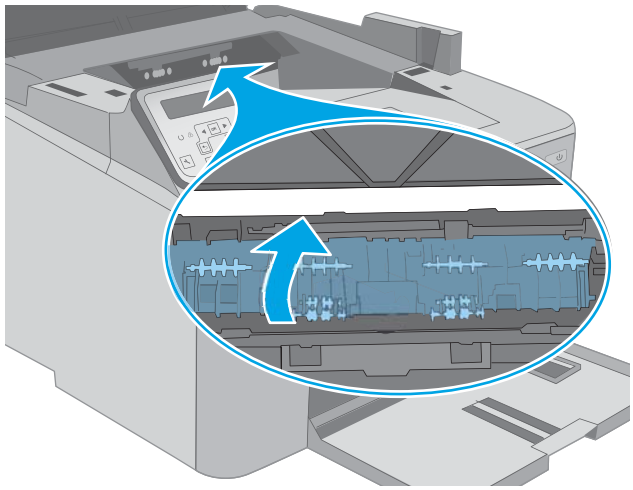

7. Close the cartridge door.

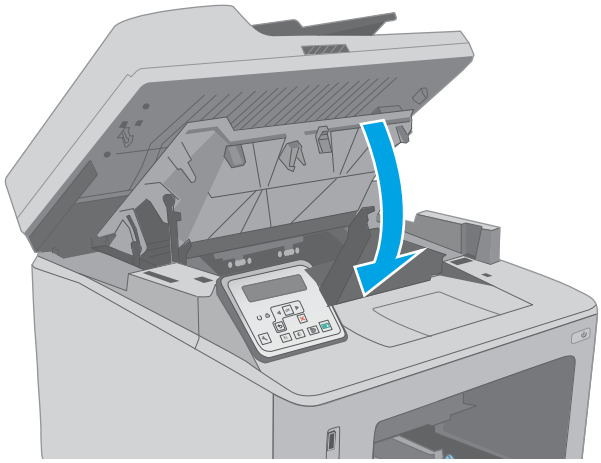

8. Lower the scanner assembly.

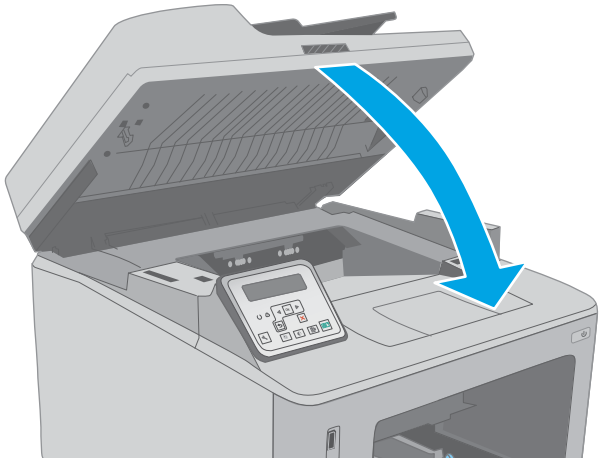

Clear jams in the duplexer

Use the following procedure to check for paper in all possible jam locations in the duplexer. For touchscreen models, the control panel displays an animation that assists in clearing the jam.

1. Open the rear door.

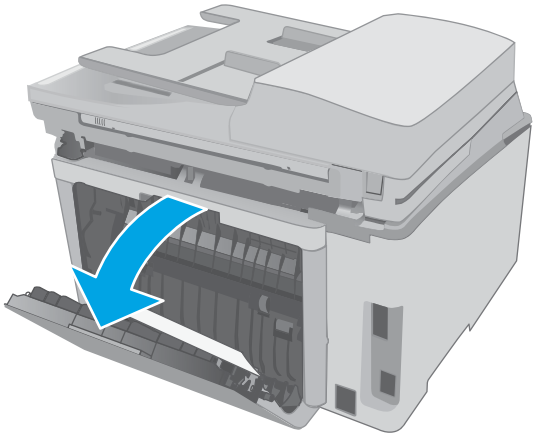

2. Remove any jammed paper from the duplex area. Use both hands to remove jammed paper to avoid tearing the paper.

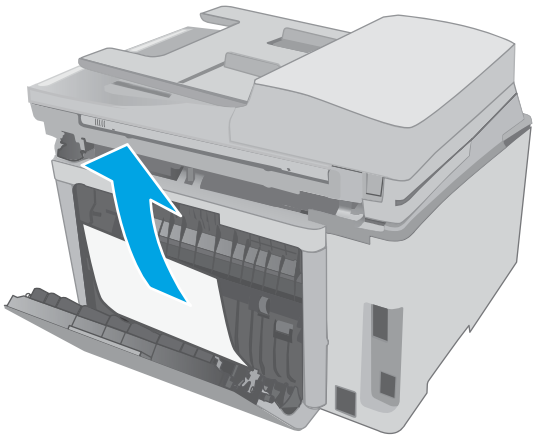

3. Close the rear door.

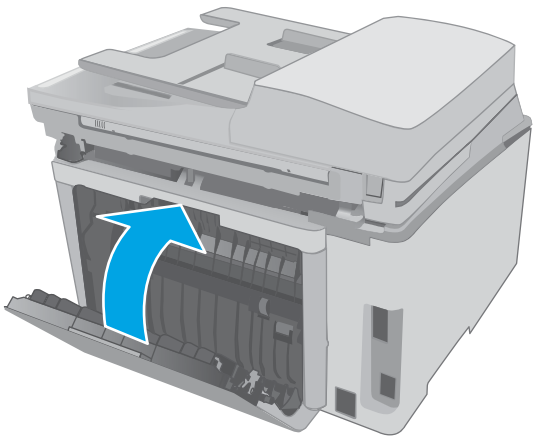

4. Lift the scanner assembly.

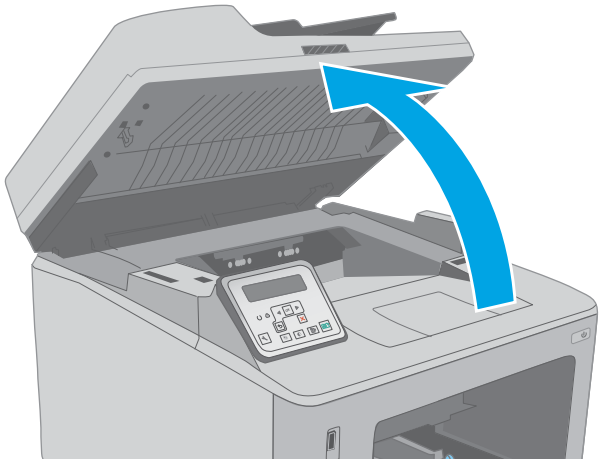

5. Open the cartridge door.

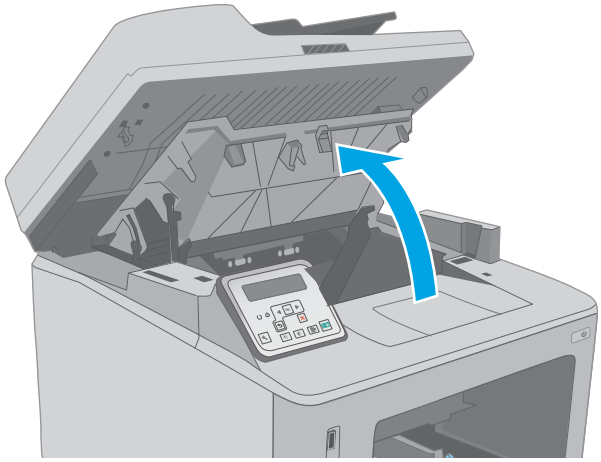

6. Pull out the green tab to release the jam-access cover.

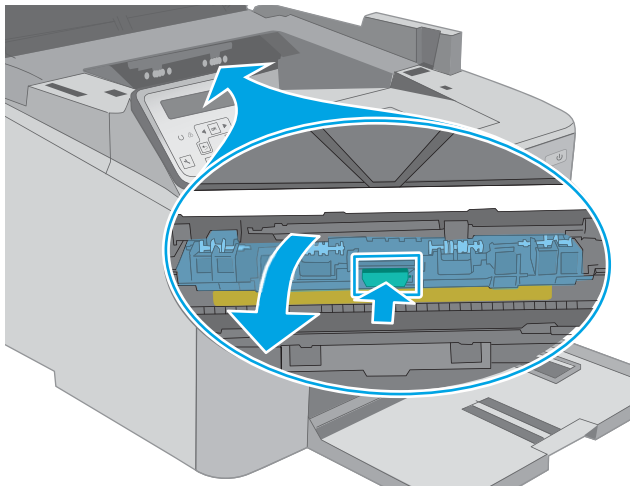

7. Remove any jammed paper.

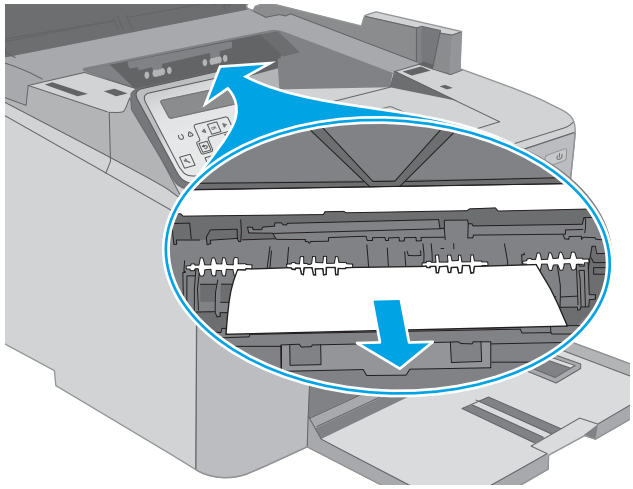

8. Close the jam-access cover.

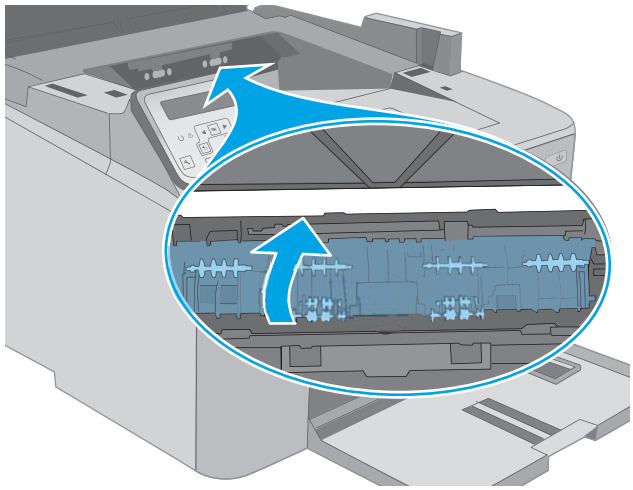

9. Close the cartridge door.

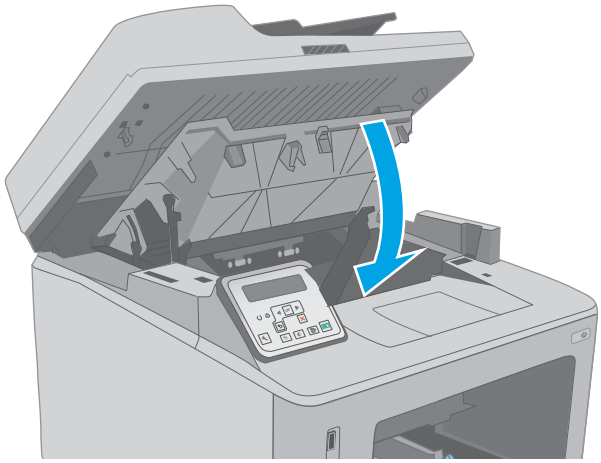

10. Lower the scanner assembly.

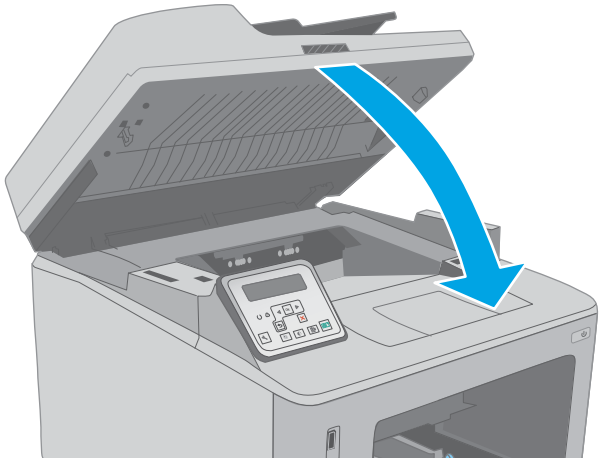

Clean the ADF replaceable film assembly

Over time, specks of debris might collect on the automatic document feeder (ADF) glass strip and replaceable film assembly, which can affect performance. Use the following procedure to clean the glass and film assembly.

1. Open the scanner lid, and then locate the ADF replaceable film assembly.

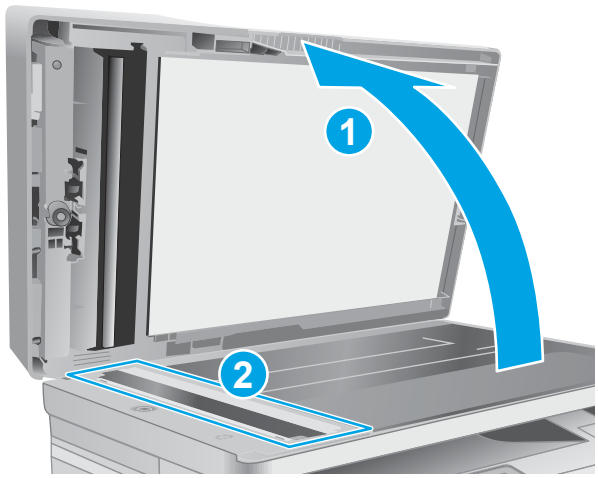

2. Use two slots to pry the film assembly away from the scanner body.

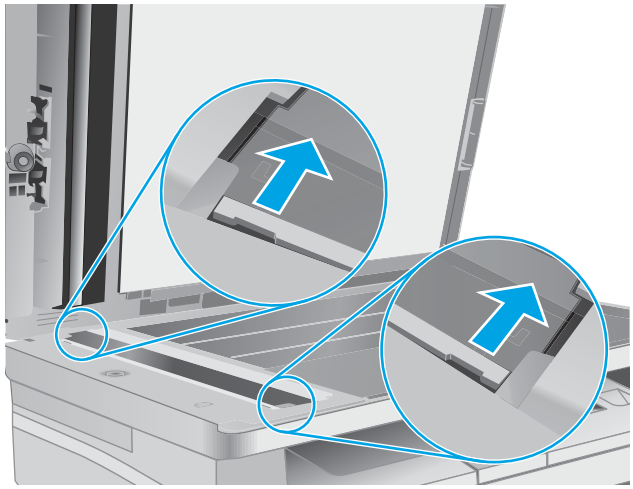

3. Slide the assembly in the direction indicated to remove it.

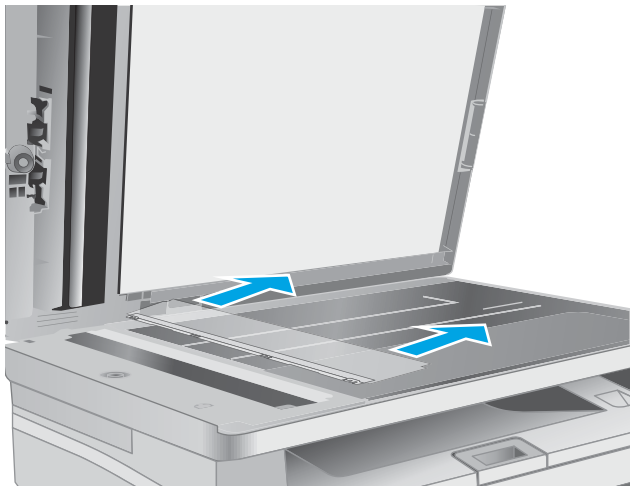

4. Clean the glass strip and the film assembly with a lint-free cloth.

   CAUTION: Do not use abrasives, acetone, benzene, ammonia, ethyl alcohol, or carbon tetrachloride on any part of the printer; these can damage the printer. Do not place liquids directly on the glass or platen. They might seep and damage the printer.

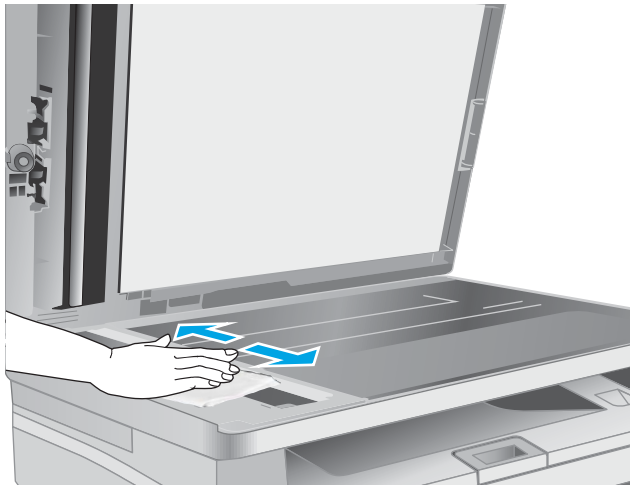

5. Reinstall the film assembly. Make sure that the film slides underneath the tabs on each end of the scanner body.

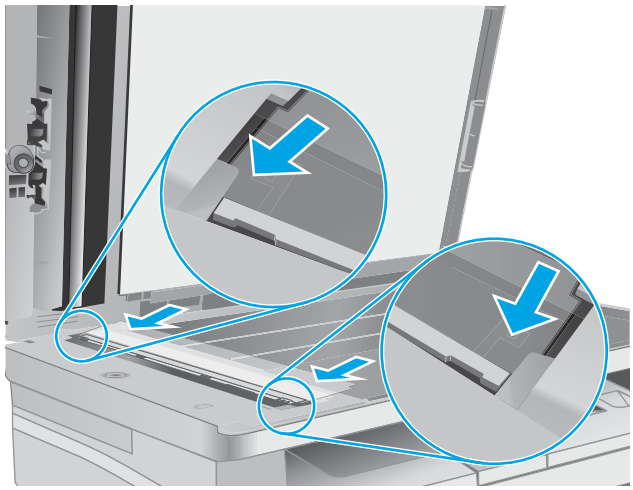

6. Close the scanner lid.



Improve print quality

- Introduction
- Print from a different software program
- Check the paper-type setting for the print job
- Check toner-cartridge status
- Clean the printer
- Visually inspect the toner cartridge and imaging drum
- Check paper and the printing environment
- Try a different print driver
- Check the EconoMode settings
- Adjust Print Density

Introduction

If the printer is having print-quality problems, try the following solutions in the order presented to resolve the issue.

Print from a different software program

Try printing from a different software program. If the page prints correctly, the problem is with the software program from which you were printing.

Check the paper-type setting for the print job

Check the paper type setting when printing from a software program and the printed pages have smears, fuzzy or dark print, curled paper, scattered dots of toner, loose toner, or small areas of missing toner.

Check the paper type setting (Windows)

1. From the software program, select the **Print** option.
2. Select the printer, and then click the **Properties** or **Preferences** button.
3. Click the **Paper/Quality** tab.
4. From the **Paper Type** drop-down list, click the **More...** option.
5. Expand the list of **Type is:** options.
6. Expand the category of paper types that best describes your paper.
7. Select the option for the type of paper you are using, and click the **OK** button.
8. Click the **OK** button to close the **Document Properties** dialog box. In the **Print** dialog box, click the **OK** button to print the job.

Check the paper type setting (OS X)

1. Click the **File** menu, and then click the **Print** option.
2. In the **Printer** menu, select the printer.
3. By default, the print driver displays the **Copies & Pages** menu. Open the menus drop-down list, and then click the **Finishing** menu.
4. Select a type from the **Media Type** drop-down list.
5. Click the **Print** button.

Check toner-cartridge status

Follow these steps to check the estimated life remaining in the toner cartridges and if applicable, the status of other replaceable maintenance parts.

NOTE: The steps vary according to the type of control panel.

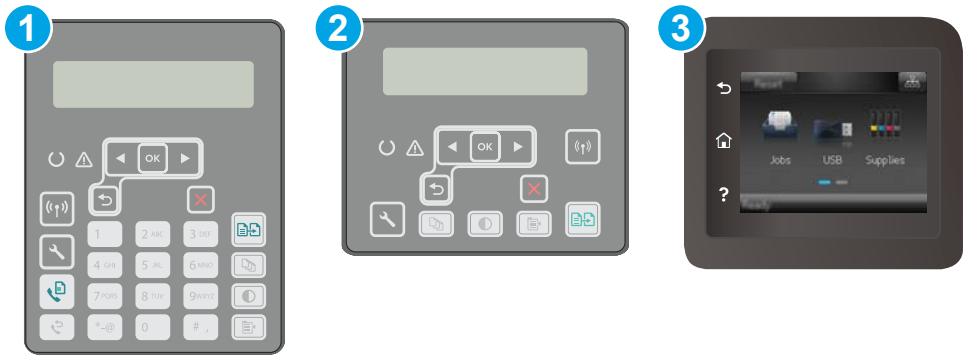

1	2–line control panel (fax models)
2	2-line control panel
3	Touchscreen control panel

Step one: Print the supplies status page

1. **2-line control panels:** On the printer control panel, press the Setup button.

   Touchscreen control panels: From the Home screen on the printer control panel, swipe until the Setup menu displays. Touch the Setup icon to open the menu.

2. Open the following menus:
   - Reports
   - Supplies Status
3. **2-line control panels:** Scroll to **Print Supplies status page**, and then press the OK button.

   Touchscreen control panels: Touch Manage Supplies, and then touch Print Supplies Status.

Step two: Check supplies status

1. Look at the supplies status report to check the percent of life remaining for the toner cartridges and if applicable, the status of other replaceable maintenance parts.

   Print quality problems can occur when using a toner cartridge that is at its estimated end of life. The supplies status page indicates when a supply level is very low. After an HP supply has reached the very low threshold, HP's premium protection warranty on that supply has ended.

   The toner cartridge does not need to be replaced now unless the print quality is no longer acceptable. Consider having a replacement available to install when print quality is no longer acceptable.

   If you determine that you need to replace a toner cartridge or other replaceable maintenance parts, the supplies status page lists the genuine HP part numbers.

2. Check to see if you are using a genuine HP cartridge.

   A genuine HP toner cartridge has "HP" on it, or has the HP logo on it. For more information on identifying HP cartridges go to www.hp.com/go/learnaboutsupplies.

Clean the printer

Print a cleaning page

During the printing process paper, toner, and dust particles can accumulate inside the printer and can cause print-quality issues such as toner specks or spatter, smears, streaks, lines, or repeating marks.

Use the following procedure to print a cleaning page.

NOTE: The steps vary according to the type of control panel.



1	2–line control panel (fax models)
2	2-line control panel
3	Touchscreen control panel

1. **2-line control panels:** On the printer control panel, press the Setup button.

   Touchscreen control panels: From the Home screen on the printer control panel, swipe until the Setup menu displays. Touch the Setup icon to open the menu.

2. Open the following menus:

- Service
- Cleaning Page

3. Load plain letter or A4 paper when you are prompted, and then press the OK button.

   A **Cleaning** message displays on the printer control panel. Wait until the process is complete. Discard the page that prints.

Check the scanner glass for dirt and smudges

Over time, specks of debris might collect on the scanner glass and white plastic backing, which can affect performance. Use the following procedure to clean the scanner.

1. Press the power button to turn the printer off, and then disconnect the power cable from the electrical outlet.
2. Open the scanner lid.
3. Clean the scanner glass and the white plastic backing underneath the scanner lid with a soft cloth or sponge that has been moistened with nonabrasive glass cleaner.

   ⚠ CAUTION: Do not use abrasives, acetone, benzene, ammonia, ethyl alcohol, or carbon tetrachloride on any part of the printer; these can damage the printer. Do not place liquids directly on the glass or platen. They might seep and damage the printer.

4. Dry the glass and white plastic parts with a chamois or a cellulose sponge to prevent spotting.
5. Connect the power cable to an outlet, and then press the power button to turn the printer on.

Visually inspect the toner cartridge and imaging drum

Follow these steps to inspect each toner cartridge and imaging drum.

1. Remove the toner cartridge and imaging drum from the printer.
2. Check the memory chip for damage.
3. Examine the surface of the green imaging drum.

   ⚠ CAUTION: Do not touch the imaging drum. Fingerprints on the imaging drum can cause print-quality problems.

4. If you see any scratches, fingerprints, or other damage on the imaging drum, replace the toner cartridge and imaging drum.
5. Reinstall the toner cartridge and imaging drum, and print a few pages to see if the problem has resolved.

Check paper and the printing environment

Step one: Use paper that meets HP specifications

Some print-quality problems arise from using paper that does not meet HP specifications.

- Always use a paper type and weight that this printer supports.
- Use paper that is of good quality and free of cuts, nicks, tears, spots, loose particles, dust, wrinkles, voids, staples, and curled or bent edges.
- Use paper that has not been previously printed on.
- Use paper that does not contain metallic material, such as glitter.
- Use paper that is designed for use in laser printers. Do not use paper that is designed only for use in Inkjet printers.
- Use paper that is not too rough. Using smoother paper generally results in better print quality.

Step two: Check the environment

The environment can directly affect print quality and is a common cause for print-quality or paper-feeding issues. Try the following solutions:

- Move the printer away from drafty locations, such as open windows or doors, or air-conditioning vents.
- Make sure the printer is not exposed to temperatures or humidity outside of printer specifications.
- Do not place the printer in a confined space, such as a cabinet.
- Place the printer on a sturdy, level surface.
- Remove anything that is blocking the vents on the printer. The printer requires good air flow on all sides, including the top.
- Protect the printer from airborne debris, dust, steam, grease, or other elements that can leave residue inside the printer.

Step three: Set the individual tray alignment

Follow these steps when text or images are not centered or aligned correctly on the printed page when printing from specific trays.

NOTE: The steps vary according to the type of control panel.

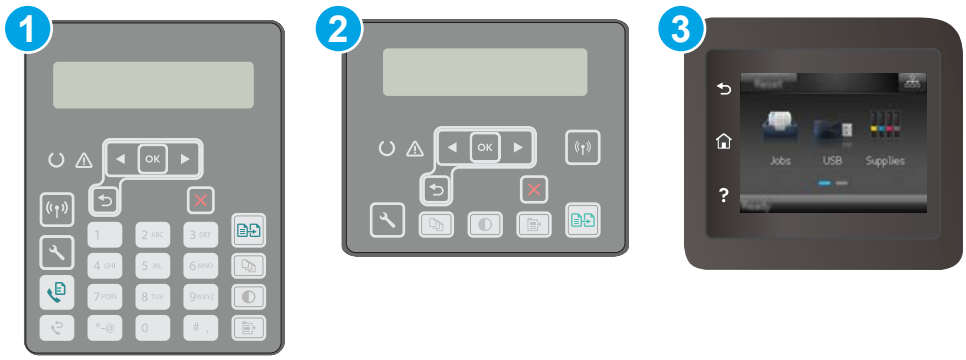

1	2–line control panel (fax models)
2	2-line control panel
3	Touchscreen control panel

1. **2-line control panels:** On the printer control panel, press the Setup button.

   Touchscreen control panels: From the Home screen on the printer control panel, swipe until the Setup menu displays. Touch the Setup icon to open the menu.

2. Open the following menus:
   - System Setup
   - Print Quality
   - Adjust Alignment
   - Print Test Page
3. Select the tray to adjust, and then follow the instructions on the printed pages.
4. Print the test page again to verify the results. Make further adjustments if necessary.
5. Touch or press the OK button to save the new settings.

Try a different print driver

Try a different print driver when printing from a software program and the printed pages have unexpected lines in graphics, missing text, missing graphics, incorrect formatting, or substituted fonts.

Download any of the following drivers from the HP Web site: www.hp.com/support/ljM148MFP, www.hp.com/support/ljM227MFP.

HP PCL.6 driver	If available, this printer-specific print driver supports older operating systems like Windows® XP and Windows Vista®. For a list of supported operating systems, go to www.hp.com/go/support.
HP PCL 6 driver	This printer-specific print driver supports Windows 7 and newer operating systems that support version 3 drivers. For a list of supported operating systems, go to www.hp.com/go/support.

HP PCL-6 driver	This product-specific print driver supports Windows 8 and newer operating systems that support version 4 drivers. For a list of supported operating systems, go to www.hp.com/go/support.
HP UPD PS driver	• Recommended for printing with Adobe® software programs or with other highly graphics-intensive software programs • Provides support for printing from postscript emulation needs, or for postscript flash font support
HP UPD PCL 6	• Recommended for printing in all Windows environments • Provides the overall best speed, print quality, and printer feature support for most users • Developed to align with Windows Graphic Device Interface (GDI) for best speed in Windows environments • Might not be fully compatible with third-party and custom software programs that are based on PCL 5

Check the EconoMode settings

HP does not recommend the full-time use of EconoMode. If EconoMode is used full-time, the toner supply might outlast the mechanical parts in the toner cartridge. If print quality begins to degrade and is no longer acceptable, consider replacing the toner cartridge.

NOTE: This feature is available with the PCL 6 print driver for Windows. If you are not using that driver, you can enable the feature by using the HP Embedded Web Server.

Follow these steps if the entire page is too dark or too light.

1. From the software program, select the **Print** option.
2. Select the printer, and then click the **Properties** or **Preferences** button.
3. Click the **Paper/Quality** tab, and locate the **Print Quality** area.
4. If the entire page is too dark, use these settings:
   - Select the **600 dpi** option.
   - Select the **EconoMode** check box to enable it.

   If the entire page is too light, use these settings:
   - Select the **FastRes 1200** option.
   - Clear the **EconoMode** check box to disable it.
5. Click the **OK** button to close the **Document Properties** dialog box. In the **Print** dialog, click the **OK** button to print the job.

Adjust Print Density

Complete the following steps to adjust the print density.

NOTE: The steps vary according to the type of control panel.

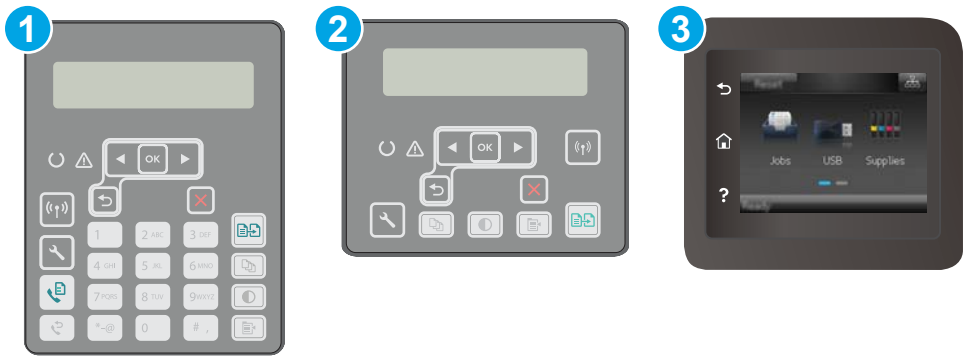

1	2–line control panel (fax models)
2	2-line control panel
3	Touchscreen control panel

1. **2-line control panels:** On the printer control panel, press the Setup button.

   Touchscreen control panels: From the Home screen on the printer control panel, swipe until the Setup menu displays. Touch the Setup icon to open the menu.

2. Open the following menus:

   - System Setup
   - Print Density

3. Select the correct print density setting.

   - 1: lightest
   - 2: lighter
   - 3: default
   - 4: darker
   - 5: darkest

Improve copy and scan image quality

Introduction

If the printer is having image quality problems, try the following solutions in the order presented to resolve the issue.

- Check the scanner glass for dirt and smudges
- Check the paper settings
- Optimize for text or pictures
- Edge-to-edge copying
- Clean the pickup rollers and separation pad in the document feeder

Try these few simple steps first:

- Use the flatbed scanner rather than the document feeder.
- Use high-quality originals.
- When using the document feeder, load the original document into the feeder correctly, using the paper guides, to avoid unclear or skewed images.

If the problem still exists, try these additional solutions. If they do not fix the problem, see “Improve print quality” for further solutions.

Check the scanner glass for dirt and smudges

Over time, specks of debris might collect on the scanner glass and white plastic backing, which can affect performance. Use the following procedure to clean the scanner.

1. Press the power button to turn the printer off, and then disconnect the power cable from the electrical outlet.
2. Open the scanner lid.
3. Clean the scanner glass and the white plastic backing underneath the scanner lid with a soft cloth or sponge that has been moistened with nonabrasive glass cleaner.

   ⚠ CAUTION: Do not use abrasives, acetone, benzene, ammonia, ethyl alcohol, or carbon tetrachloride on any part of the printer; these can damage the printer. Do not place liquids directly on the glass or platen. They might seep and damage the printer.

4. Dry the glass and white plastic parts with a chamois or a cellulose sponge to prevent spotting.
5. Connect the power cable to an outlet, and then press the power button to turn the printer on.

Check the paper settings

NOTE: The steps vary according to the type of control panel.

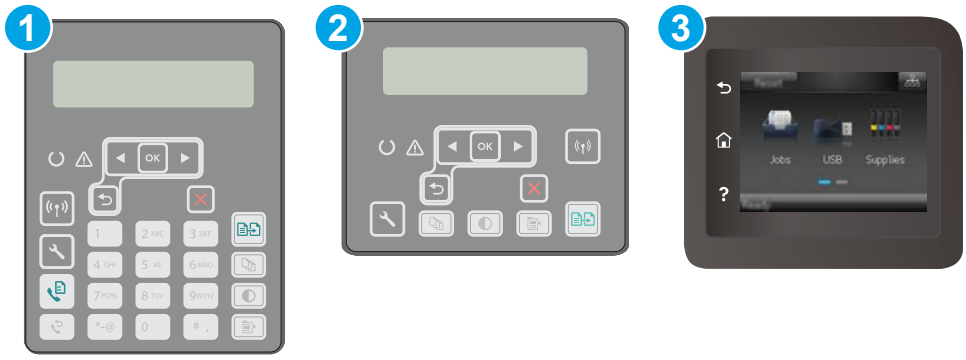

1	2–line control panel (fax models)
2	2-line control panel
3	Touchscreen control panel

2-line control panels

1. Press the Copy Menu button.
2. Open the **Paper** menu.
3. Select the paper size that is in the tray, and then press OK.
4. Select the paper type that is in the tray, and then press OK.

Touchscreen control panels

1. From the Home screen on the printer control panel, touch the Copy icon.
2. Touch the Settings button, and then scroll to and touch the Paper button.
3. From the list of paper sizes, touch the name of the paper size that is in the tray.
4. From the list of paper types, touch the name of the paper type that is in the tray.

Optimize for text or pictures

NOTE: The steps vary according to the type of control panel.

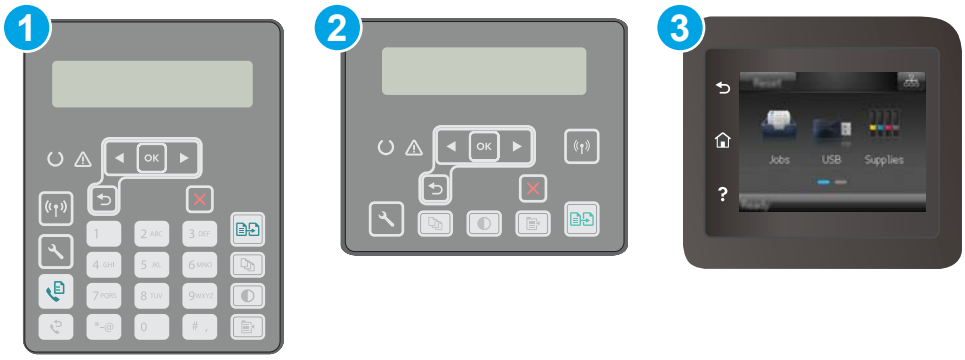

1	2–line control panel (fax models)
2	2-line control panel
3	Touchscreen control panel

2-line control panels

1. On the printer control panel, press the Copy Menu button.
2. To optimize copy quality for different types of documents, use the arrow keys to select the **Optimize** menu, and then press the OK button. The following copy-quality settings are available:
   - **Auto Select**: Use this setting when you are not concerned about the quality of the copy. This is the default setting.
   - **Mixed**: Use this setting for documents that contain a mixture of text and graphics.
   - **Text**: Use this setting for documents that contain mostly text.
   - **Picture**: Use this setting for documents that contain mostly graphics.

Touchscreen control panels

1. From the Home screen on the printer control panel, touch the Copy icon.
2. Touch the Settings button, and then scroll to and touch the Optimize button.
3. Touch the name of the setting you want to adjust.
   - Auto Select: Use this setting when you are not concerned about the quality of the copy. This is the default setting.
   - Mixed: Use this setting for documents that contain a mixture of text and graphics.
   - Text: Use this setting for documents that contain mostly text.
   - Picture: Use this setting for documents that contain mostly graphics.

Edge-to-edge copying

The printer cannot print fully edge-to-edge. There is a 4 mm (1/6 inch) unprintable border around the page.

Considerations for printing or scanning documents with cropped edges:

- When the original is smaller than the output size, move the original 4 mm (1/6 inch) away from the corner indicated by the icon on the scanner. Recopy or scan in this position.
- When the original is the size of the printed output that you want, use the Reduce/Enlarge feature to reduce the image so the copy is not cropped.

Clean the pickup rollers and separation pad in the document feeder

If the document feeder experiences paper-handling problems, such as jams or multiple-page feeds, clean the document-feeder rollers and separation pad.

1. Open the document-feeder cover.

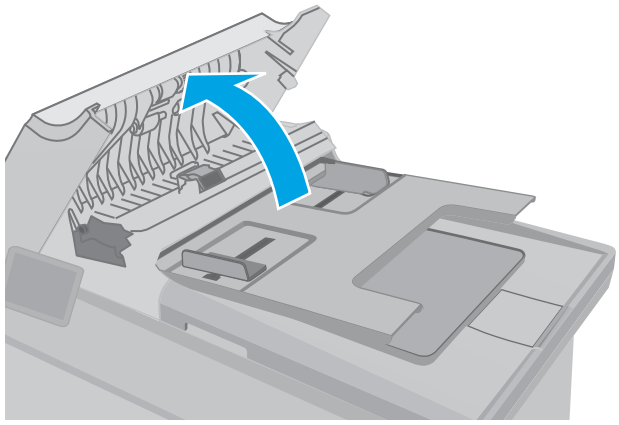

2. Use a moist, lint-free cloth to wipe both pickup rollers and the separation pad to remove dirt.

   CAUTION: Do not use abrasives, acetone, benzene, ammonia, ethyl alcohol, or carbon tetrachloride on any part of the printer; these can damage the printer. Do not place liquids directly on the glass or platen. They might seep and damage the printer.

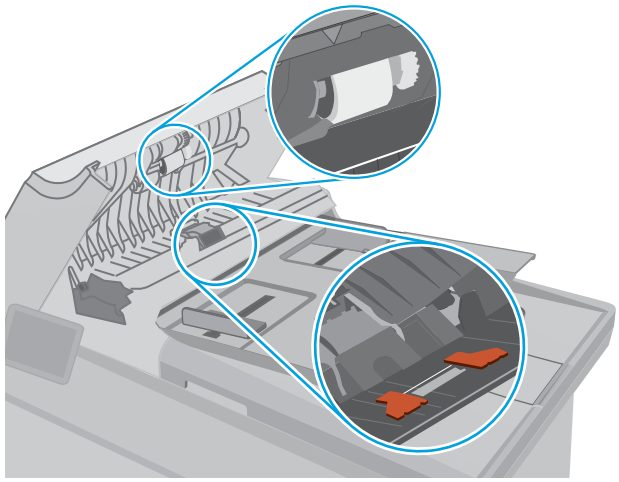

3. Close the document-feeder cover. Make sure it is completely closed.

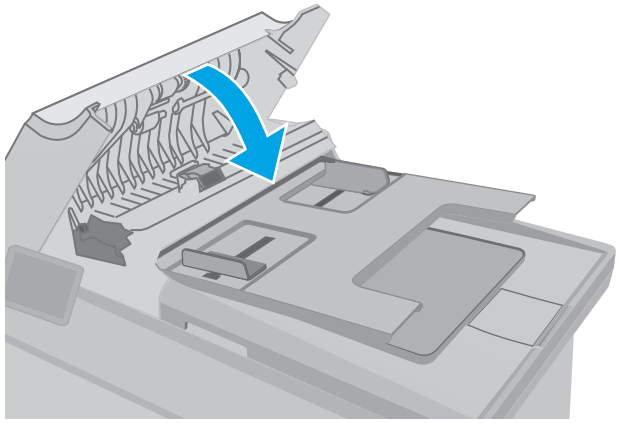

Improve fax image quality

Introduction

If the printer is having image quality problems, try the following solutions in the order presented to resolve the issue.

- Check the scanner glass for dirt and smudges
- Check the send-fax resolution settings
- Check the error-correction settings
- Check the fit-to-page setting
- Clean the pickup rollers and separation pad in the document feeder
- Send to a different fax machine
- Check the sender's fax machine

Try these few simple steps first:

- Use the flatbed scanner rather than the document feeder.
- Use high-quality originals.
- When using the document feeder, load the original document into the feeder correctly, using the paper guides, to avoid unclear or skewed images.

If the problem still exists, try these additional solutions. If they do not fix the problem, see “Improve print quality” for further solutions.

Check the scanner glass for dirt and smudges

Over time, specks of debris might collect on the scanner glass and white plastic backing, which can affect performance. Use the following procedure to clean the scanner.

1. Press the power button to turn the printer off, and then disconnect the power cable from the electrical outlet.
2. Open the scanner lid.
3. Clean the scanner glass and the white plastic backing underneath the scanner lid with a soft cloth or sponge that has been moistened with nonabrasive glass cleaner.

   ⚠ CAUTION: Do not use abrasives, acetone, benzene, ammonia, ethyl alcohol, or carbon tetrachloride on any part of the printer; these can damage the printer. Do not place liquids directly on the glass or platen. They might seep and damage the printer.

4. Dry the glass and white plastic parts with a chamois or a cellulose sponge to prevent spotting.
5. Connect the power cable to an outlet, and then press the power button to turn the printer on.

Check the send-fax resolution settings

If the printer was unable to send a fax because the receiving fax machine did not answer or was busy, the printer attempts to redial based on the redial-on-busy, redial-on-no-answer, and redial-on-communication-error options.

NOTE: The steps vary according to the type of control panel.



1	2-line control panel (fax models)
2	Touchscreen control panel

2-line control panels

1. On the printer control panel, press the Setup button.
2. Open the following menus:
   a. Fax Setup
   b. Send Fax Setup
   c. Def. Resolution
3. Select a resolution setting, and then press OK.

Touchscreen control panels

1. From the Home screen on the printer control panel, swipe until the Setup menu displays. Touch the Setup icon to open the menu.
2. Open the following menus:
   a. Fax Setup
   b. Advanced Setup
   c. Fax Resolution
3. Select a resolution setting, and then touch OK.

Check the error-correction settings

Usually, the printer monitors the signals on the telephone line while it is sending or receiving a fax. If the printer detects an error during the transmission and the error-correction setting is On, the printer can request that the portion of the fax be resent. The factory-set default for error correction is On.

You should turn off error correction only if you are having trouble sending or receiving a fax, and you are willing to accept the errors in the transmission. Turning off the setting might be useful when you are trying to send a fax overseas or receive one from overseas, or if you are using a satellite telephone connection.

NOTE: The steps vary according to the type of control panel.



1	2-line control panel (fax models)
2	Touchscreen control panel

2-line control panels

1. On the printer control panel, press the Setup button.
2. Open the following menus:
   a. Fax Setup
   b. All Faxes
   c. Error Correction
3. Select On.

Touchscreen control panels

1. From the Home screen on the printer control panel, swipe until the Setup menu displays. Touch the Setup icon to open the menu.
2. Open the following menus:
   a. Service
   b. Fax Service
   c. Error Correction

3. Touch the menu.
4. Touch the On button.

Check the fit-to-page setting

If the printer printed a fax job off the page, turn on the fit-to-page feature from the printer control panel.

NOTE: Make sure that the default paper size setting matches the size of the paper in the tray.

NOTE: The steps vary according to the type of control panel.



1	2-line control panel (fax models)
2	Touchscreen control panel

2-line control panels

1. On the printer control panel, press the Setup button.
2. Open the following menus:
   a. Fax Setup
   b. Recv. Fax Setup
   c. Fit to Page
3. Select On.

Touchscreen control panels

1. From the Home screen on the printer control panel, swipe until the Setup menu displays. Touch the Setup icon to open the menu.
2. Open the following menus:
   a. Fax Setup
   b. Advanced Setup
   c. Fit to Page
3. Touch the On button.

Clean the pickup rollers and separation pad in the document feeder

If the document feeder experiences paper-handling problems, such as jams or multiple-page feeds, clean the document-feeder rollers and separation pad.

1. Open the document-feeder cover.

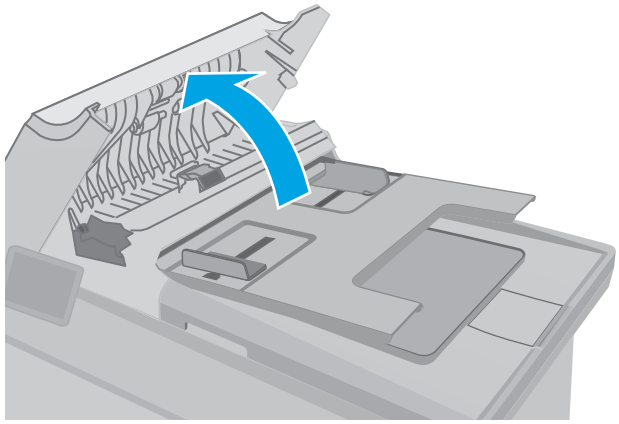

2. Use a moist, lint-free cloth to wipe both pickup rollers and the separation pad to remove dirt.

   CAUTION: Do not use abrasives, acetone, benzene, ammonia, ethyl alcohol, or carbon tetrachloride on any part of the printer; these can damage the printer. Do not place liquids directly on the glass or platen. They might seep and damage the printer.

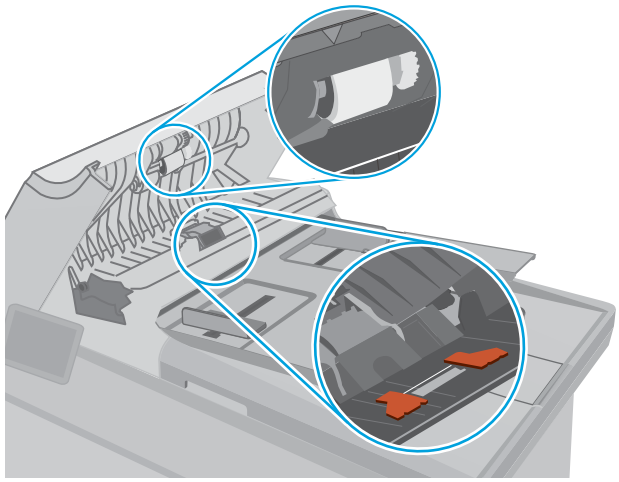

3. Close the document-feeder cover. Make sure it is completely closed.

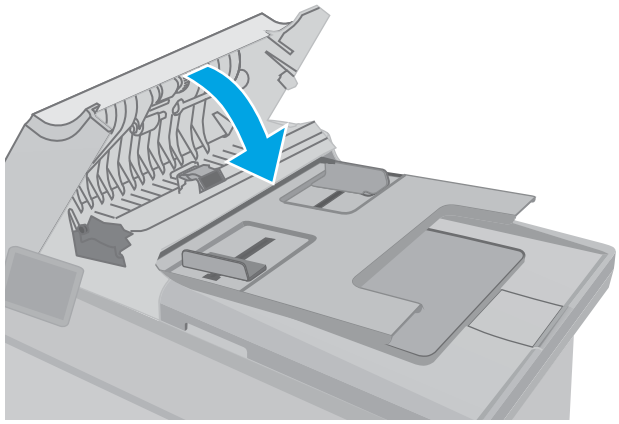

Send to a different fax machine

Try sending the fax to a different fax machine. If the fax quality is better, the problem is related to the initial recipient's fax machine settings or supplies status.

Check the sender's fax machine

Ask the sender to try sending from a different fax machine. If the fax quality is better, the problem is with the sender's fax machine. If a different fax machine is unavailable, ask the sender to consider making the following changes:

- Make sure the original document is on white (not colored) paper.
- Increase the fax resolution, quality level, or contrast settings.
- If possible, send the fax from a computer software program.

Solve wired network problems

Introduction

Check the following items to verify that the printer is communicating with the network. Before beginning, print a configuration page from the printer control panel and locate the printer IP address that is listed on this page.

- Poor physical connection
- The computer is using the incorrect IP address for the printer
- The computer is unable to communicate with the printer
- The printer is using incorrect link speed and duplex settings for the network
- New software programs might be causing compatibility problems
- The computer or workstation might be set up incorrectly
- The printer is disabled, or other network settings are incorrect

NOTE: HP does not support peer-to-peer networking, as the feature is a function of Microsoft operating systems and not of the HP print drivers. For more information, go to Microsoft at www.microsoft.com.

Poor physical connection

1. Verify that the printer is attached to the correct network port using a cable of the correct length.
2. Verify that cable connections are secure.
3. Look at the network port connection on the back of the printer, and verify that the amber activity light and the green link-status light are lit.
4. If the problem continues, try a different cable or port on the hub.

The computer is using the incorrect IP address for the printer

1. Open the printer properties and click the **Ports** tab. Verify that the current IP address for the printer is selected. The printer IP address is listed on the printer configuration page.
2. If you installed the printer using the HP standard TCP/IP port, select the box labeled **Always print to this printer, even if its IP address changes**.
3. If you installed the printer using a Microsoft standard TCP/IP port, use the hostname instead of the IP address.
4. If the IP address is correct, delete the printer and then add it again.

The computer is unable to communicate with the printer

1. Test network communication by pinging the network.
   a. Open a command-line prompt on your computer.

- For Windows, click **Start**, click **Run**, type `cmd`, and then press Enter.
- For OS X, go to **Applications**, then **Utilities**, and open **Terminal**.

b. Type `ping` followed by the IP address for your printer.

c. If the window displays round-trip times, the network is working.

2. If the ping command failed, verify that the network hubs are on, and then verify that the network settings, the printer, and the computer are all configured for the same network.

The printer is using incorrect link speed and duplex settings for the network

HP recommends leaving these settings in automatic mode (the default setting). If you change these settings, you must also change them for your network.

New software programs might be causing compatibility problems

Verify that any new software programs are correctly installed and that they use the correct print driver.

The computer or workstation might be set up incorrectly

1. Check the network drivers, print drivers, and the network redirection settings.
2. Verify that the operating system is configured correctly.

The printer is disabled, or other network settings are incorrect

1. Review the configuration page to check the status of the network protocol. Enable it if necessary.
2. Reconfigure the network settings if necessary.

Solve wireless network problems

- Introduction
- Wireless connectivity checklist
- The printer does not print after the wireless configuration completes
- The printer does not print, and the computer has a third-party firewall installed
- The wireless connection does not work after moving the wireless router or printer
- Cannot connect more computers to the wireless printer
- The wireless printer loses communication when connected to a VPN
- The network does not appear in the wireless networks list
- The wireless network is not functioning
- Perform a wireless network diagnostic test
- Reduce interference on a wireless network

Introduction

Use the troubleshooting information to help resolve issues.

NOTE: To determine whether HP NFC and Wi-Fi Direct printing are enabled on your printer, print a configuration page from the printer control panel

Wireless connectivity checklist

- Verify that the network cable is not connected.
- Verify that the printer and the wireless router are turned on and have power. Also make sure that the wireless radio in the printer is turned on.
- Verify that the service set identifier (SSID) is correct. Print a configuration page to determine the SSID. If you are not sure the SSID is correct, run the wireless setup again.
- With secured networks, verify that the security information is correct. If the security information is incorrect, run the wireless setup again.
- If the wireless network is working correctly, try accessing other computers on the wireless network. If the network has Internet access, try connecting to the Internet over a wireless connection.
- Verify that the encryption method (AES or TKIP) is the same for the printer as it is for the wireless access point (on networks using WPA security).
- Verify that the printer is within the range of the wireless network. For most networks, the printer must be within 30 m (100 ft) of the wireless access point (wireless router).
- Verify that obstacles do not block the wireless signal. Remove any large metal objects between the access point and the printer. Make sure poles, walls, or support columns containing metal or concrete do not separate the printer and wireless access point.

- Verify that the printer is located away from electronic devices that might interfere with the wireless signal. Many devices can interfere with the wireless signal including motors, cordless phones, security system cameras, other wireless networks, and some Bluetooth devices.
- Verify that the print driver is installed on the computer.
- Verify that you have selected the correct printer port.
- Verify that the computer and printer connect to the same wireless network.
- For OS X, verify that the wireless router supports Bonjour.

The printer does not print after the wireless configuration completes

1. Make sure that the printer is turned on and in the ready state.
2. Turn off any third-party firewalls on your computer.
3. Make sure that the wireless network is working correctly.
4. Make sure that your computer is working correctly. If necessary, restart the computer.
5. Verify that you can open the printer HP Embedded Web Server from a computer on the network.

The printer does not print, and the computer has a third-party firewall installed

1. Update the firewall with the most recent update available from the manufacturer.
2. If programs request firewall access when you install the printer or try to print, make sure you allow the programs to run.
3. Temporarily turn off the firewall, and then install the wireless printer on the computer. Enable the firewall when you have completed the wireless installation.

The wireless connection does not work after moving the wireless router or printer

1. Make sure that the router or printer connects to the same network that your computer connects to.
2. Print a configuration page.
3. Compare the service set identifier (SSID) on the configuration page to the SSID in the printer configuration for the computer.
4. If the numbers are not the same, the devices are not connecting to the same network. Reconfigure the wireless setup for the printer.

Cannot connect more computers to the wireless printer

1. Make sure that the other computers are within the wireless range and that no obstacles block the signal. For most networks, the wireless range is within 30 m (100 ft) of the wireless access point.
2. Make sure that the printer is turned on and in the ready state.
3. Make sure there are not more than 5 concurrent Wi-Fi Direct users.
4. Turn off any third-party firewalls on your computer.

5. Make sure that the wireless network is working correctly.
6. Make sure that your computer is working correctly. If necessary, restart the computer.

The wireless printer loses communication when connected to a VPN

- Typically, you cannot connect to a VPN and other networks at the same time.

The network does not appear in the wireless networks list

- Make sure the wireless router is turned on and has power.
- The network might be hidden. However, you can still connect to a hidden network.

The wireless network is not functioning

1. Make sure that the network cable is not connected.
2. To verify if the network has lost communication, try connecting other devices to the network.
3. Test network communication by pinging the network.
   a. Open a command-line prompt on your computer.
      - For Windows, click **Start**, click **Run**, type `cmd`, and then press Enter.
      - For OS X, go to **Applications**, then **Utilities**, and open **Terminal**.
   b. Type `ping` followed by the router IP address.
   c. If the window displays round-trip times, the network is working.
4. Make sure that the router or printer connects to the same network that the computer connects to.
   a. Print a configuration page.
   b. Compare the service set identifier (SSID) on the configuration report to the SSID in the printer configuration for the computer.
   c. If the numbers are not the same, the devices are not connecting to the same network. Reconfigure the wireless setup for the printer.

Perform a wireless network diagnostic test

From the printer control panel, you can run a diagnostic test that provides information about the wireless network settings.

NOTE: The steps vary according to the type of control panel.

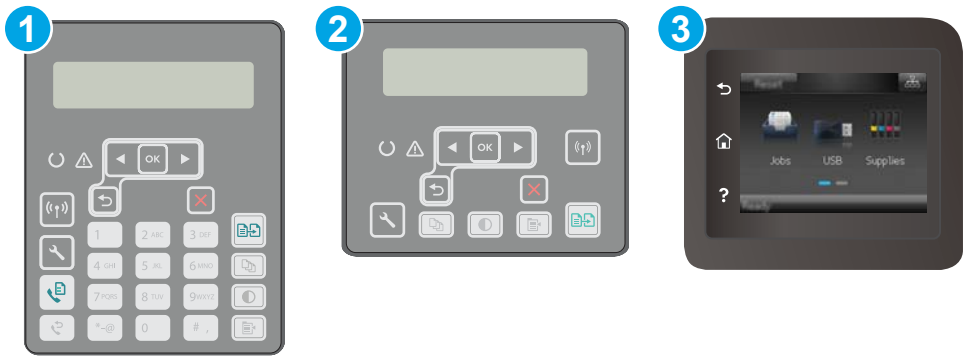

1	2-line control panel (fax models)
2	2-line control panel
3	Touchscreen control panel

2-line control panels

1. On the printer control panel, press the Setup button.
2. Open the following menus:
   - **Self Diagnostics**
   - **Run Wireless Test**
3. Press the OK button to start the test. The printer prints a test page that shows test results.

Touchscreen control panels

1. From the Home screen on the printer control panel, swipe until the Setup menu displays. Touch the Setup icon to open the menu.
2. Scroll to and select Self Diagnostics.
3. Select Run Wireless Test to start the test. The printer prints a test page that shows test results.

Reduce interference on a wireless network

The following tips can reduce interference in a wireless network:

- Keep the wireless devices away from large metal objects, such as filing cabinets, and other electromagnetic devices, such as microwaves and cordless telephones. These objects can disrupt radio signals.
- Keep the wireless devices away from large masonry structures and other building structures. These objects can absorb radio waves and lower signal strength.
- Position the wireless router in a central location in line of sight with the wireless printers on the network.

Solve fax problems

Introduction

Use the fax troubleshooting information to help resolve issues.

- Fax troubleshooting checklist
- Solve general fax problems

Fax troubleshooting checklist

- Several possible fixes are available. After each recommended action, retry faxing to see if the problem is resolved.
- For best results during fax problem solving, make sure the line from the printer is connected directly to the wall phone port. Disconnect all other devices that are connected to the printer.

1. Verify that the telephone cord is connected to the correct port on the back of the printer.
2. Check the phone line by using the fax test:

2-line control panels

a. On the product control panel, press the Setup button.

b. Select **Service**, and then select **Run Fax Test**. The product prints a fax test report.

Touchscreen control panels

a. From the Home screen on the product control panel, touch the Setup button.

b. Open the following menus:

- Service
- Fax Service

c. Select the Run Fax Test option. The printer prints a fax test report.

The report contains the following possible results:

- **Pass**: The report contains all of the current fax settings for review.
- **Fail**: The report indicates the nature of the error and contains suggestions for how to resolve the issue.

3. Verify that the printer firmware is current:

a. Print a configuration page from the control panel Reports menu to obtain the current firmware date code.

b. Go to www.hp.com/support, select your country/region language, click **Get software and drivers** link, type the printer name in the search field, press the ENTER button, and then select the printer from the list of search results.

c. Select the operating system.

d. Under the **Firmware** section, locate the **Firmware Update Utility**.

NOTE: Make sure to use the firmware update utility that is specific to the printer model.

e. Click **Download**, click **Run**, and then click **Run** again.

f. When the utility launches, select the printer from the drop-down list, and then click **Send Firmware**.

NOTE: To print a configuration page to verify the installed firmware version before or after the update process, click **Print Config**.

g. Follow the on-screen instructions to complete the installation, and then click the **Exit** button to close the utility.

4. Verify that the fax was set up when the printer software was installed.

   From the computer, in the HP program folder, run the Fax Setup Utility.

5. Verify that the telephone service supports analog fax.

   - If using ISDN or digital PBX, contact your service provider for information about configuring to an analog fax line.
   - If using a VoIP service, change the Fax Speed setting to Slow (V.29) from the control panel. Ask if your service provider supports fax and for the recommended fax modem speed. Some companies might require an adapter.
   - If you are using a DSL service, make sure that a filter is included on the phone-line connection to the printer. Contact the DSL service provider, or purchase a DSL filter if you do not have one. If a DSL filter is installed, try another filter because filters can be defective.

Solve general fax problems

- Faxes are sending slowly
- Fax quality is poor
- Fax cuts off or prints on two pages

Faxes are sending slowly

The printer is experiencing poor phone line quality.

- Retry sending the fax when the line conditions have improved.
- Check with the phone service provider that the line supports fax.
- Turn off the Error Correction setting.

  a. Open the Setup Menu menu.

  b. Open the Service menu.

  c. Open the Fax Service menu.

  d. Open the Error Correction menu.

  e. Select the Off setting.

NOTE: This can reduce image quality.

- Use white paper for the original. Do not use colors such as gray, yellow, or pink.
- Increase the Fax Speed setting.
    a. Open the Setup Menu menu.
    b. Open the Fax Setup menu.
    c. Open the Advanced Setup menu.
    d. Open the Fax Speed menu.
    e. Select the correct setting.
- Divide large fax jobs into smaller sections, and then fax them individually.
- Change the fax settings on the control panel to a lower resolution.
    a. Open the Setup Menu menu.
    b. Open the Fax Setup menu.
    c. Open the Advanced Setup menu.
    d. Open the Fax Resolution menu.
    e. Select the correct setting.

Fax quality is poor

Fax is blurry or light.

- Increase fax resolution when sending faxes. Resolution does not affect received faxes.
    a. Open the Setup Menu menu.
    b. Open the Fax Setup menu.
    c. Open the Advanced Setup menu.
    d. Open the Fax Resolution menu.
    e. Select the correct setting.

NOTE: Increasing resolution slows transmission speed.

- Turn on the Error Correction setting from the control panel.
    a. Open the Setup Menu menu.
    b. Open the Service menu.
    c. Open the Fax Service menu.
    d. Open the Error Correction menu.
    e. Select the On setting.
- Check the toner cartridges and replace if necessary.
- Ask the sender to darken the contrast setting on the sending fax machine, and then resend the fax.

Fax cuts off or prints on two pages

- Set the Default Paper Size setting. Faxes print on a single size of paper based on the Default Paper Size settings.
  a. Open the Setup Menu menu.
  b. Open the System Setup menu.
  c. Open the Paper Setup menu.
  d. Open the Default Paper Size menu.
  e. Select the correct setting.
- Set the paper type and size for the tray used for faxes.
- Turn on the Fit to Page setting to print longer length faxes on letter or A4 size paper.
  a. Open the Setup Menu menu.
  b. Open the Fax Setup menu.
  c. Open the Advanced Setup menu.
  d. Open the Fit to Page menu.
  e. Select the On setting.

NOTE: If the Fit to Page setting is off and the Default Paper Size setting is set to letter, a legal size original prints on two pages.

Index

A
accessories
  ordering 30
  part numbers 30
acoustic specifications 14
AirPrint 60
Android devices
  printing from 61
applications
  downloading 106
Apps menu 106

B
bin, output
  locating 2
browser requirements
  HP Embedded Web Server 108

C
cartridge policy 32
checklist
  fax troubleshooting 188
  wireless connectivity 184
cleaning
  document feeder glass 160
  glass 165, 170, 175
  paper path 164
control panel
  help 131
  locating 2
copying
  edges of documents 173
  multiple copies 66
  optimizing for text or pictures 172
  setting paper size and type 171
  single copies 66
  two-sided documents 68
customer support
  online 130

D
defaults, restoring 132
dimensions, printer 13
document feeder 68
  copying two-sided documents 68
  faxing from 102
  paper-feeding problems 137
double-sided copying 68
double-sided printing
  Mac 52
  Windows 49
drivers, supported 11
duplex 68
duplex printing
  Mac 52
duplex printing (double-sided)
  settings (Windows) 48
  Windows 49
duplexer
  locating 3
duplexing
  manually (Mac) 52
  manually (Windows) 49

E
EconoMode setting 123, 168
economy settings 123
electrical specifications 14
electronic faxes
  sending 103
Embedded Web Server (EWS)
  assigning passwords 119
  features 108
envelope
  orientation 25
envelopes, loading 25
Explorer, versions supported
  HP Embedded Web Server 108

F
factory-set defaults, restoring 132
fax
  sending from software 103
  solve general problems 189
  speed dials 102
fax troubleshooting
  checklist 188
faxing
  from a computer (Windows) 103
  from the document feeder 102
  from the flatbed scanner 101

G
genuine HP cartridges 32
glass, cleaning 165, 170, 175
glass, cleaning document feeder 160

H
help, control panel 131
HP Customer Care 130
HP Device Toolbox, using 108
HP Easy Scan software (OS X) 73
HP Embedded Web Server (EWS)
  features 108
HP ePrint 58
HP ePrint software 59
HP EWS, using 108
HP Scan software (Windows) 72
HP Utility 112
HP Utility for Mac
  Bonjour 112
  features 112
HP Utility, Mac 112

HP Web Services
applications 106
enabling 106

I
image quality
check toner-cartridge status 163
interface ports
locating 3
Internet Explorer, versions supported
HP Embedded Web Server 108

J
jams
locating 138

L
label
orientation 27
labels
printing (Windows) 50
printing on 27
labels, loading 27
lock
formatter 120

M
Macintosh
HP Utility 112
Main input tray
loading 21
loading envelopes 25
loading labels 27
orientation 21
maintenance kits
part numbers 30
manual duplex
Mac 52
Windows 49
memory
included 11
Microsoft Word, faxing from 103
mobile printing
Android devices 61
mobile printing solutions 11
mobile printing, software supported 13
multiple pages per sheet
printing (Mac) 53
printing (Windows) 49

N
Netscape Navigator, versions supported
HP Embedded Web Server 108
network duplex settings, changing 117
network installation 107
network link speed settings, changing 117
network port
locating 3
networks
installing the printer 107
supported 11
number of copies, changing 66

O
on/off button, locating 2
online help, control panel 131
online support 130
operating systems (OS)
supported 11
operating systems, supported 11
ordering
supplies and accessories 30
OS (operating system)
supported 11
output bin
locating 2

P
pages per minute 11
pages per sheet
selecting (Mac) 53
selecting (Windows) 49
paper
selecting 166
paper pickup problems
solving 135, 136
paper type
selecting (Windows) 50
paper types
selecting (Mac) 53
paper, ordering 30
part numbers
accessories 30
replacement parts 30
staple cartridges 30
supplies 30
toner cartridge 30
toner cartridges 30
phone book, fax
adding entries 102
power
consumption 14
power connection
locating 3
power switch, locating 2
print drivers, supported 11
print on both sides
Mac 52
manually, Windows 49
Windows 49
printing
from USB flash drives 62
printing on both sides
settings (Windows) 48
Priority input tray
loading 18
loading envelopes 25
loading labels 27
orientation 18

R
rear door
locating 3
replacement parts
part numbers 30
restoring factory-set defaults 132

S
scanner
document feeder glass cleaning 160
faxing from 101
glass cleaning 165, 170, 175
scanning
from HP Easy Scan software (OS X) 73
from HP Scan software (Windows) 72
sending faxes
from software 103
settings
factory-set defaults, restoring 132
shut down after delay
setting 124

sleep delay
setting 123
software
HP Utility 112
sending faxes 103
solve problems
fax 189
special paper
printing (Windows) 50
specifications
electrical and acoustic 14
speed dials
programming 102
staple cartridges
part numbers 30
status
HP Utility, Mac 112
supplies
low threshold settings 133
ordering 30
part numbers 30
status, viewing with HP Utility for Mac 112
using when low 133
support
online 130
system requirements
HP Embedded Web Server 108

T
technical support
online 130
toner cartridge
low threshold settings 133
part numbers 30
using when low 133
toner cartridges
part numbers 30
transparencies
printing (Windows) 50
trays
capacity 11
included 11
locating 2
troubleshooting
check toner-cartridge status 163
faxes 188
network problems 182
paper feed problems 135
wired network 182
wireless network 184
two-sided copying 68
two-sided printing
settings (Windows) 48

U
USB flash drives
printing from 62
USB port
locating 3

W
walk-up USB port
locating 2
walk-up USB printing 62
web browser requirements
HP Embedded Web Server 108
Web Services
applications 106
enabling 106
Web sites
customer support 130
weight, printer 13
Wi-Fi Direct Printing 55
Wi-Fi Direct printing 13
Windows
faxing from 103
wireless network
troubleshooting 184
wireless network interference 187
Word, faxing from 103