
TAIPAN
aim-sportline.com

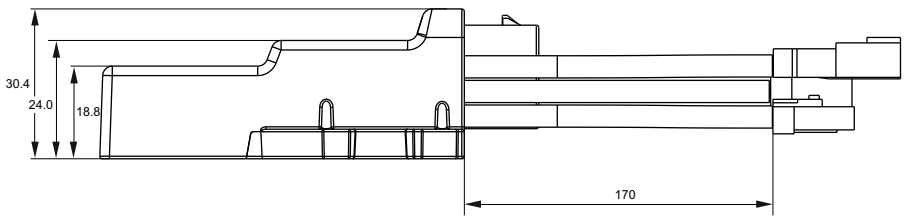
30.4
24.0
18.8
170

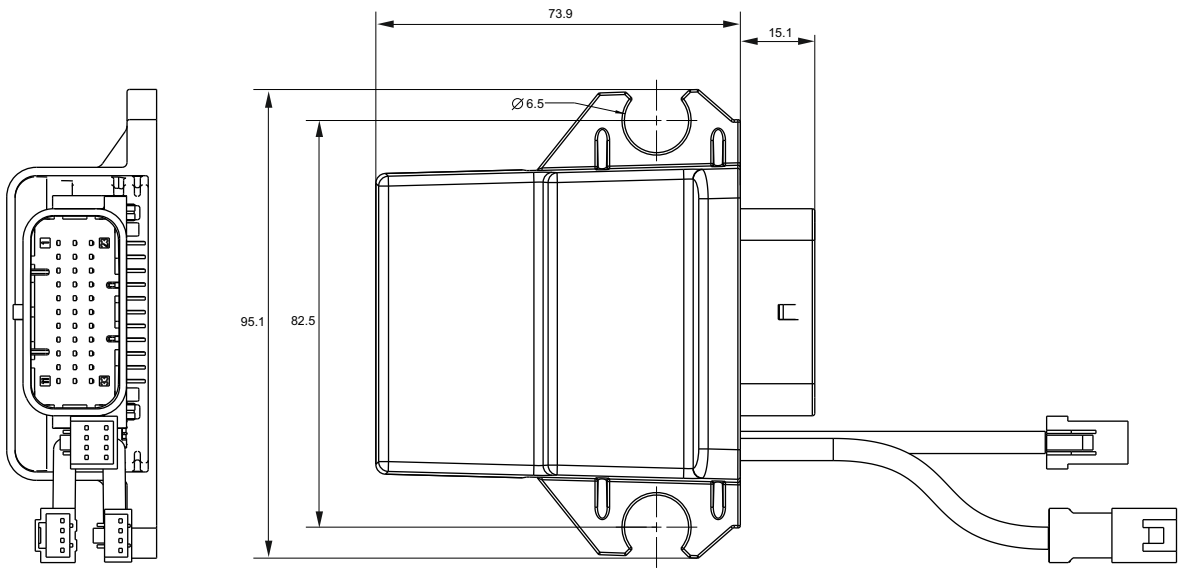
73.9
15.1
Ø 6.5
95.1
82.5

Technical specifications

Plug 'n play ECU for :

AiM ECU Taipan Y Compatible models	Bikes				
	Brand	Type	Race	Year	Project status
	YAMAHA	YZ 250 F	Cross	2019	OK
				2020	OK
				2021	OK
				2022	OK
		YZ 450 F	Cross	2021	OK
				2022	OK

Additional characteristics to the stock ECU:

- Two 0-5V analog inputs sampled @ 1,000 Hz each, could be alternatively used as switch to ground
- Second injector driver for high impedance saturated injectors (12Ω)
- One low side driver (1A)
- Two CAN bus, one for calibration purposes, one for expansions (AiM handlebar switch, dataloggers, dash ecc.)
- Three JST JWPF waterproof auxiliary connector
- Power consumption 150 mA

- Connectors: n.1 JST 04T-JWPF-VSLE-S Connector
  n.1 JST 08R-JWPF-VSLE-D Connector
  n.1 JST 04R-JWPF-VSLE-S Connector
  n.1 33 pin male Connector
- Body: PA6 + 30% glass fiber
- Dimensions: 73.9x95.1x30.4 mm
- Waterproof: IP67
- Weight: 230 g

Part numbers (ECU Taipan Y & accessories)

XE1ECUCB1	ECU Taipan Y
XE1HBS000	Handle Bar Switch
XE1UCB000	UC Bridge
XE1UCBT00	UC Bridge Tuner
XE1ECUHBS01	Kit ECU Taipan Y + Handle Bar Switch
XE1ECUHBSUCB1	Kit ECU Taipan Y + Handle Bar Switch + UC Bridge

Price

AiM Taipan Y	650 $

Pinout

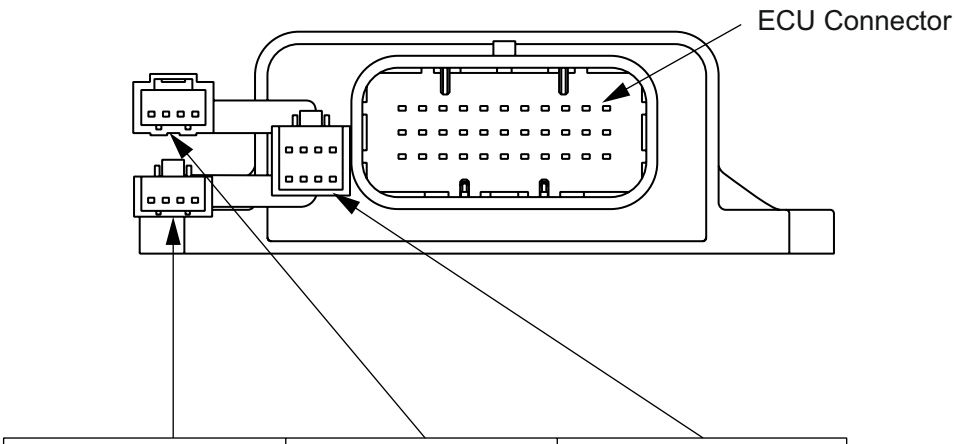

JST 04R-JWPF-VSLE-S connector external view	JST 04R-JWPF-VSLE-S connector external view	JST 08R-JWPF-VSLE-D connector external view
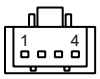	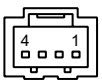	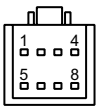
1 - GND 2 - CAN Exp. High 3 - CAN Exp. Low 4 - 12V out (switched)	1 - GND 2 - CAN CAL High 3 - CAN CAL Low 4 - 12V in	1 - 12V second inj 2 - Low Side second inj 3 - Low side 4 - GND 5 - Analog input 1 6 - Analog input 2 7 - Vref 8 - DNC

Functional diagram

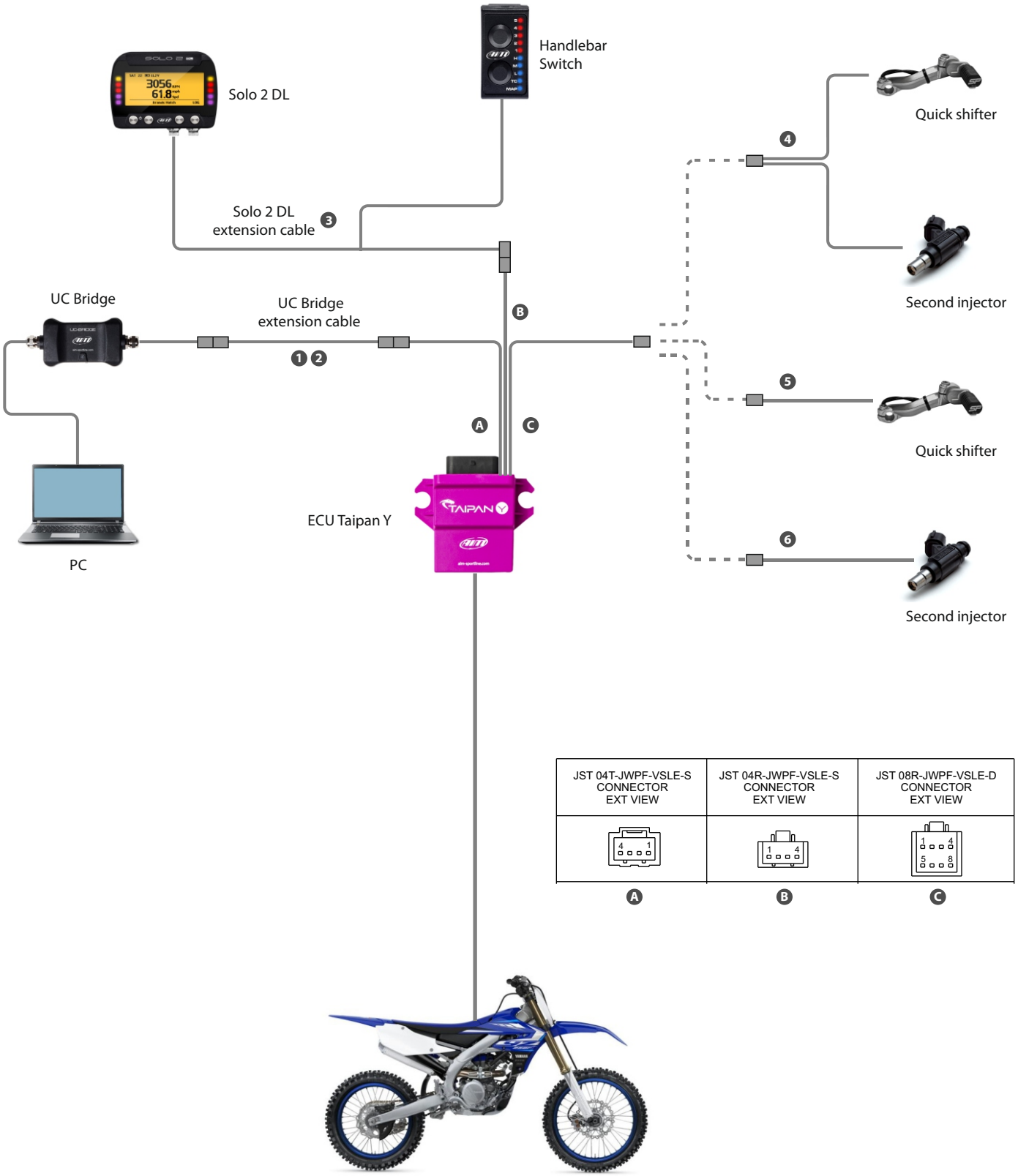

Optional cables

1 UC Bridge extension cable 2 m

Part number V02596020

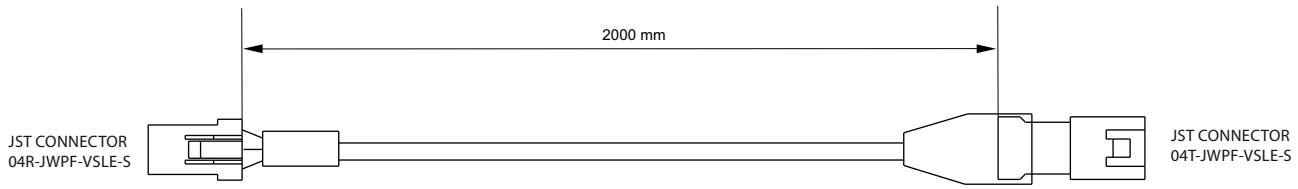

2 UC Bridge extension cable 4 m

Part number V02596030

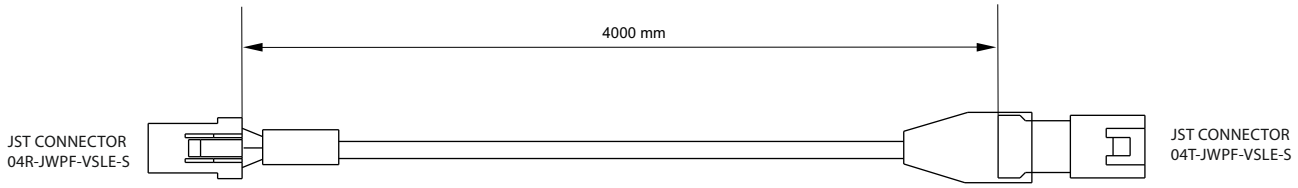

3 Solo 2 DL extension cable 50 cm

Part number V02589120

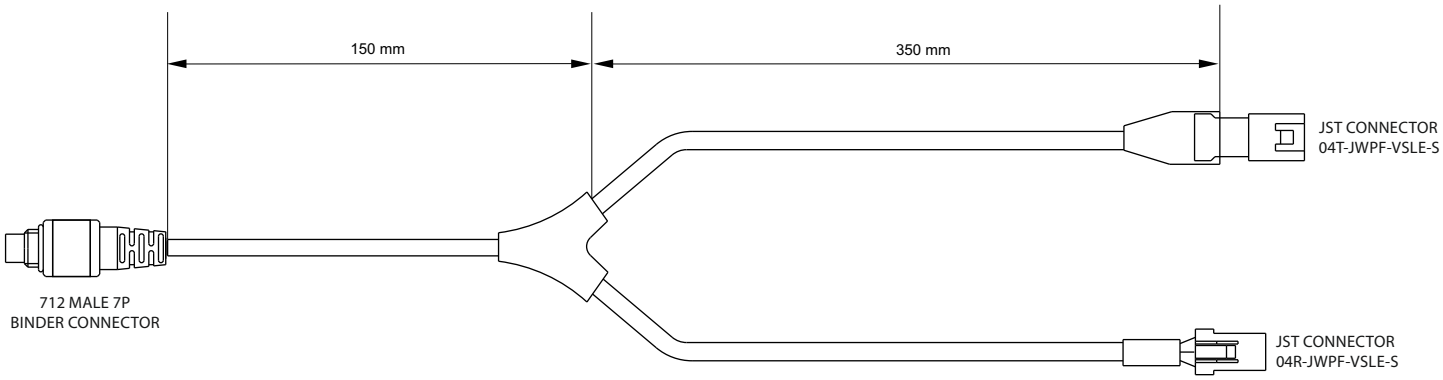

Optional cables

4 Analog channels and second injection harness
Part number V02596060

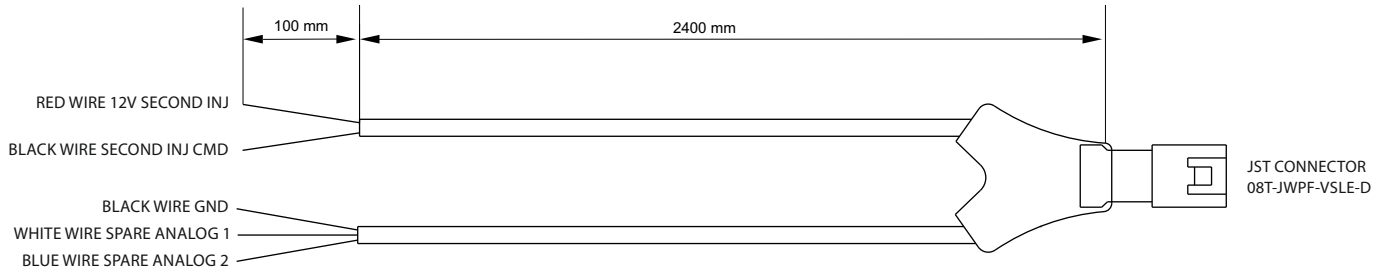

5 Analog channels harness
Part number V02596070

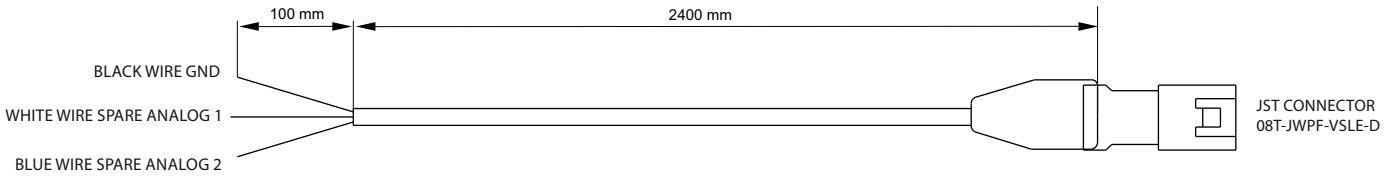

6 Second injection harness
Part number V02596080

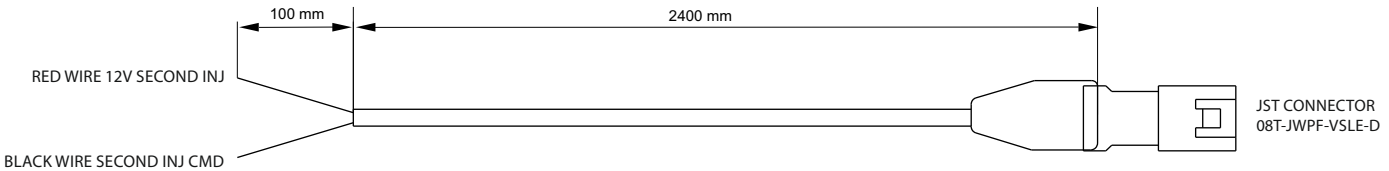

Accessories:

Handlebar Switch



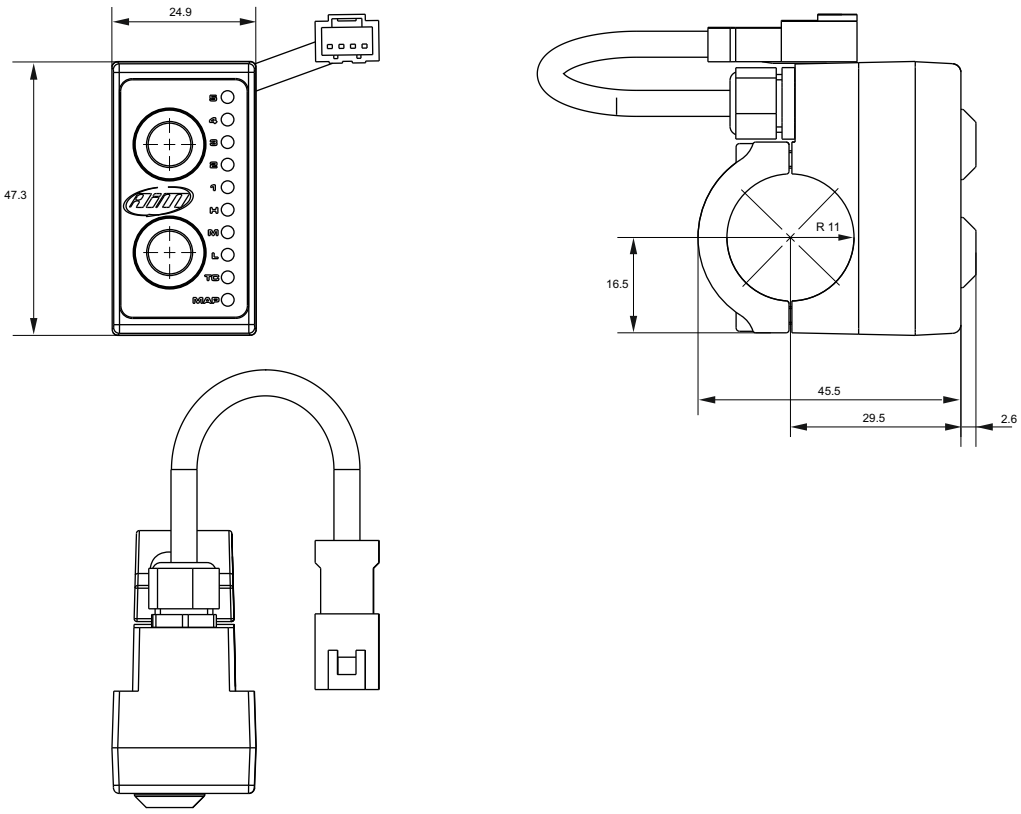

Accessories:

Handlebar Switch technical specifications and pinout

- JST waterproof connector for CAN Bus communication
- Connector: n.1 JST 04T-JWPF-VSLE-S Connector
- Body: PA6 + 30% glass fiber
- Dimensions: 47.3x24.9x48.1 mm
- Waterproof: IP67
- Weight: 70 g

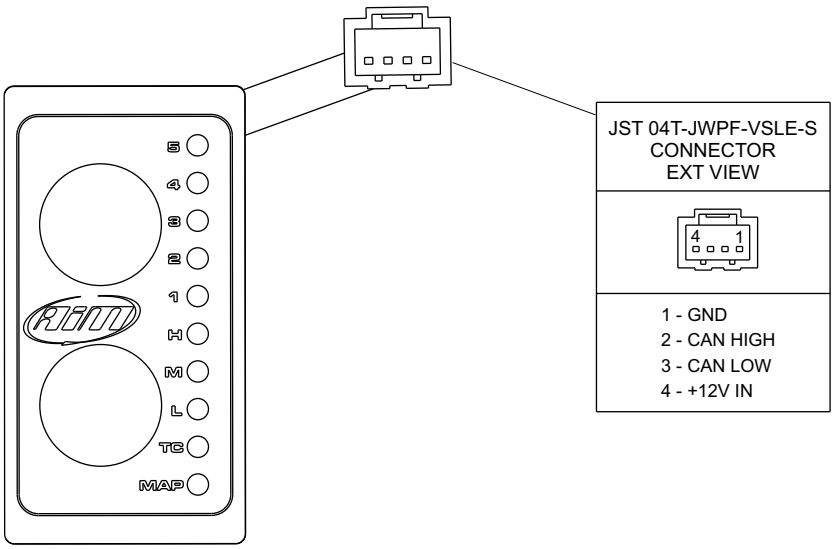

Accessories:

UC Bridge



User license



Tuner license

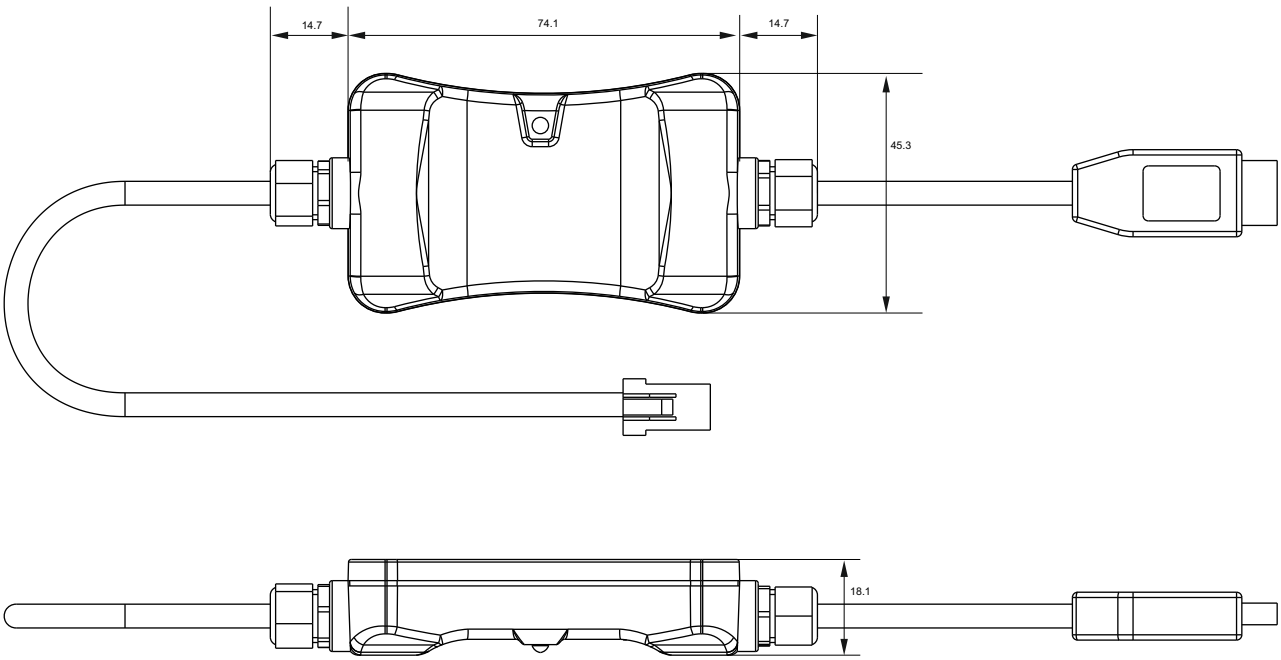

Accessories:

UC Bridge technical specifications and pinout

- Connectors: n.1 USB connection for PC
  n.1 JST 04R-JWPF-VSLE-S waterproof Connector for CAN Bus communication
- Body: PA6 + 30% glass fiber
- Dimensions: 103.5x45.3x18.1 mm
- Waterproof: IP65
- Weight: 80 g

