Sonitron Automotive Piezo components

SAP-1302 series *Back up alarm*

The 1302 series of piezo alarms generate an acoustic intermittent loud tone and are installed at the back of a car, truck, tractor, jeep, golf-trolley, ... or any other vehicle that can move in reverse at any moment, thus alerting people that are approching the vehicle.
The 1302 series are tested for use in all weather conditions and have a lifetime in continuous use of more than 1000 hours, this unique patented technology is used now for more than 20 years in the most extreme conditions and critical applications. (Nato, Airbus, Volvo, avionics, Bombardier railways, VDO, etc...)
A very low current consumption permits the electrical connection of the alarm to the reversing lights of the vehicle.
Installation of the reverse drive piezo alarm is realised in only one hour by anybody and does not require special skills. Adapted mounting for models on request.

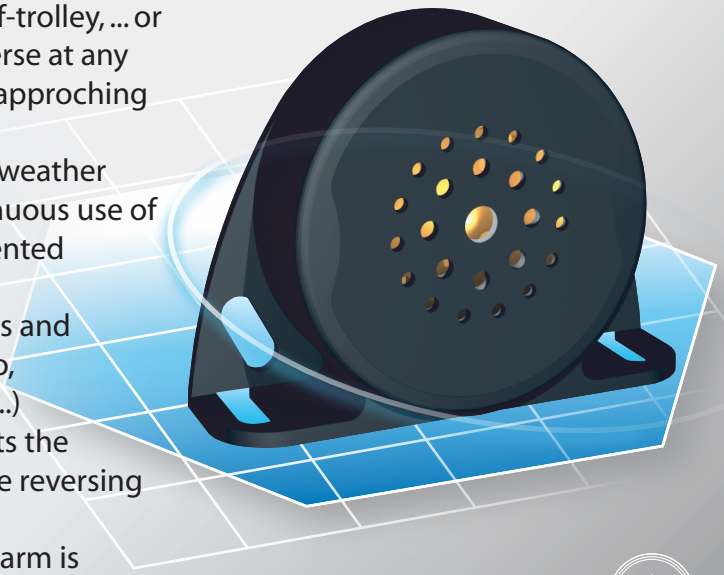

Automotive Design

ADVANTAGES & APPLICATIONS

ADVANTAGES :

- Very low current consumption
- Dust tight, shock and water resistant (IP67)
- Low frequency (large travelling distance of audible wavelength)
- No magnetic field (EMC)
- Robust fibre reinforced PBT housing
- High lifetime in continuous function
- Easy mountable design
- Multi voltage application (12/24/48Vdc)

APPLICATIONS :

- Van
- Fork-lift
- Lorry
- Bus
- Light commercial vehicle
- Car
- Light truck
- Garbage truck
- Electric vehicles (golf, airport, warehouse,…)
- Military vehicles

Reverse drive alarm (Back up alarm)

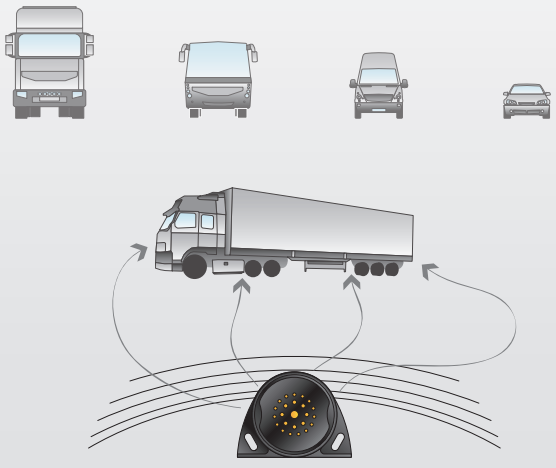

SPECIFICATIONS

MODELS	SAP-1302-A	SAP-1302-B	SAP-1302-C	SAP-1302-D
Operating voltage:	12/24 Vdc	12/24 Vdc	12/24/48 Vdc	12 Vdc**
Frequency (+/-15%):	1600 Hz (1Hz intermittent)	1600 Hz (1Hz intermittent)	1250 Hz (1Hz intermittent)	2500 Hz (1Hz intermittent)
Current consumption:	***12Vdc: 145 mA*** (avg.) ***24Vdc: 70 mA*** (avg.)	***12Vdc: 140 mA*** (avg.) ***24Vdc: 65 mA*** (avg.)	***145 mA*** (avg.)	***15 mA*** (avg.)
SPL@1.2m:	***112 dBA*** (+/- 4 dB)	***107 dBA*** (+/- 4 dB)	***97 dBA*** (+/- 4 dB)	***87 dBA*** (+/- 4 dB)
Life time (@21°C):	>1000 hours***	>1000 hours***	>1000 hours***	>1000 hours***
Case material:	PBT (UL rating: 94HB)	PBT (UL rating: 94HB)	PBT (UL rating: 94HB)	PBT (UL rating: 94HB)
Standard color of case:	Black	Black	Black	Black
Terminal material:	(F2)Fast-on or 30cm cable 2x1.5mm²	(F2)Fast-on or 30cm cable 2x1.5mm²	(F2)Fast-on or 30cm cable 2x1.5mm²	(F2)Fast-on or 30cm cable 2x1.5mm²
Storage Temp. range:	-40°C/+85°C	-40°C/+85°C	-40°C/+85°C	-40°C/+85°C
Operating Temp. range:	-40°C/+85°C	-40°C/+85°C	-40°C/+85°C	-40°C/+85°C
Weight:	230 g	230 g	210 g	230 g

- **Output voltage depending: min. 5 Vdc=76 dBA, max. 16Vdc=91 dBA.
- ***Lifetime: more than 1000 hours in continuous use, (Voltage: 12 Vdc ; T ambient: 21°C ; Humidity: 40 % ; Free air).

"Models on request" can be designed for this alarm construction!
Same housing other alarm tone:
- pulse tone
- continuous tone
- sweep tone, ...

Contact Support@sonitron.be

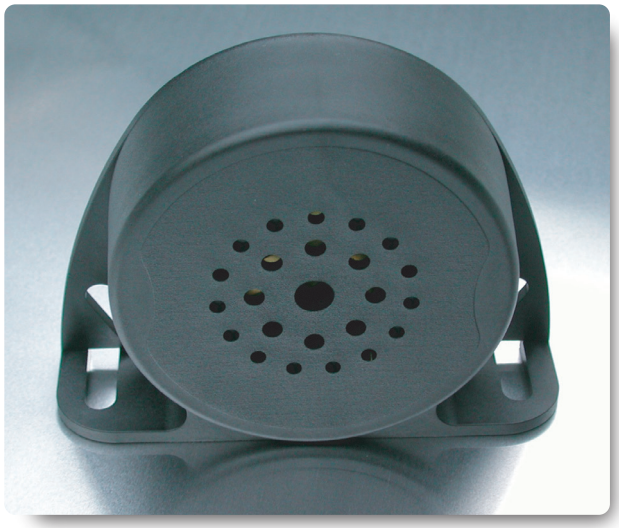

Sound pressure level vs. operating voltage

SAP-1302-A

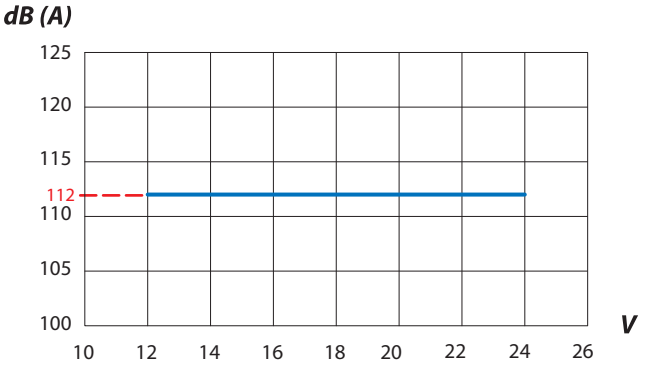

SAP-1302-B

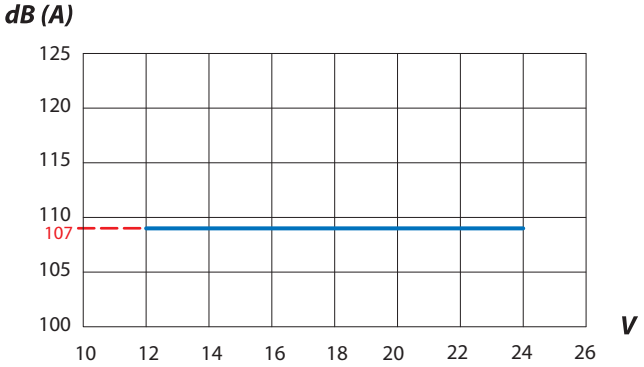

SAP-1302-C

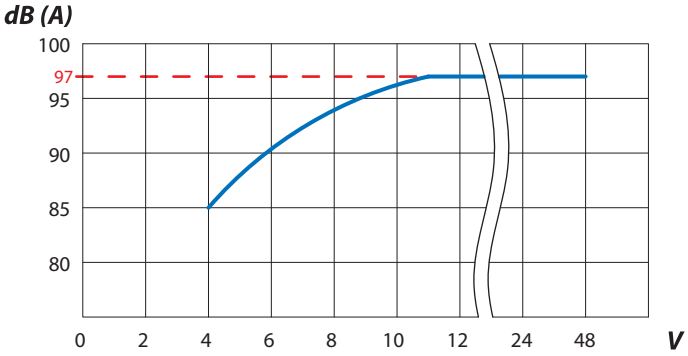

SAP-1302-D

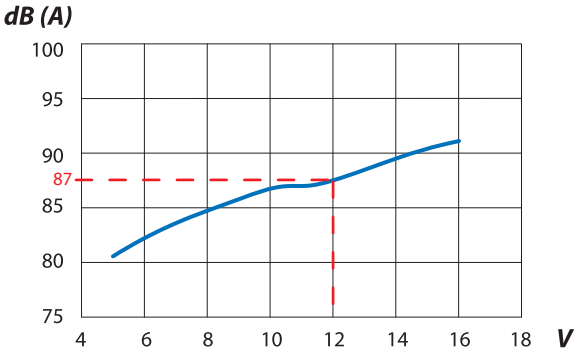

All measurements are made @ 12Vdc @1.2 meter in free air @ 21˚C.

LIST OF AVAILABLE PRODUCT TYPES

SAP-1302-A-F2	(Fast-on F2, tinned brass)
SAP-1302-A-W	(standard cable lenght=30cm)
SAP-1302-B-F2	(Fast-on F2, tinned brass)
SAP-1302-B-W	(standard cable lenght=30cm)
SAP-1302-C-F2	(Fast-on F2, tinned brass)
SAP-1302-C-W	(standard cable lenght=30cm)
SAP-1302-D-F2	(Fast-on F2, tinned brass)
SAP-1302-D-W	(standard cable lenght=30cm)

Dimensions (in mm)



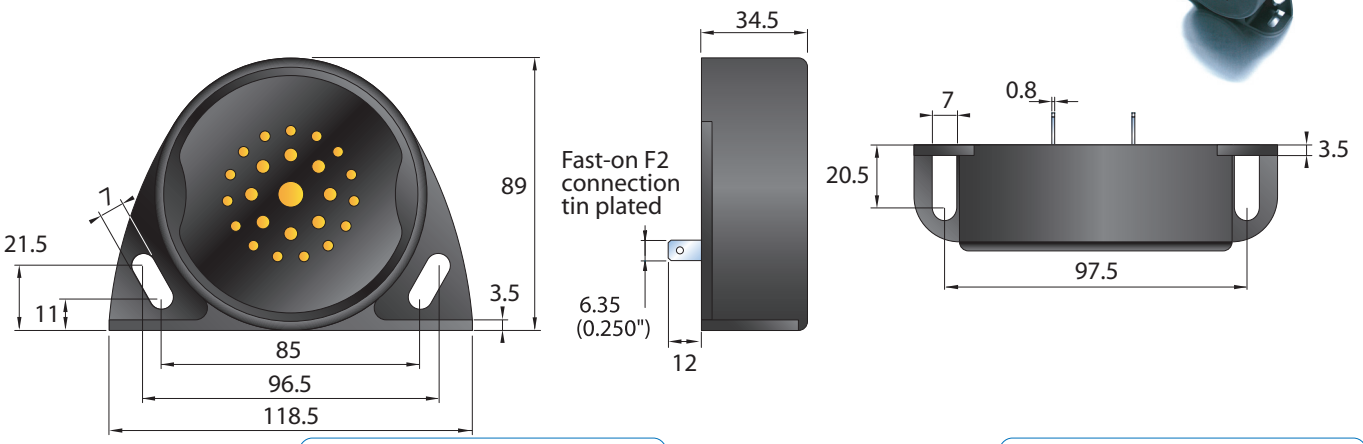

Cable version
Standard cable lenght: 30 cm
- white: pos(+)
- blue : neg (-)

SAP-1302-A-B-C
Fast-on position

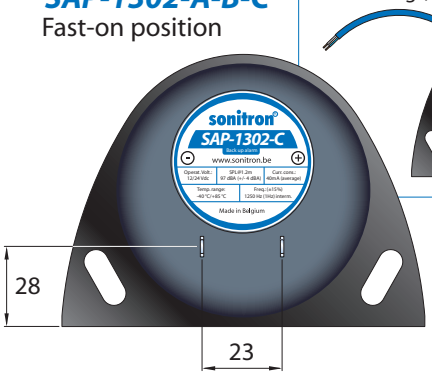

Cable version
Standard cable lenght: 30 cm
- white : pos (+)
- blue : neg (-)

SAP-1302-D
Fast-on position

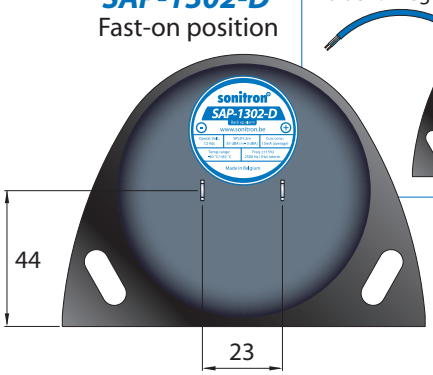

Mounting guidelines

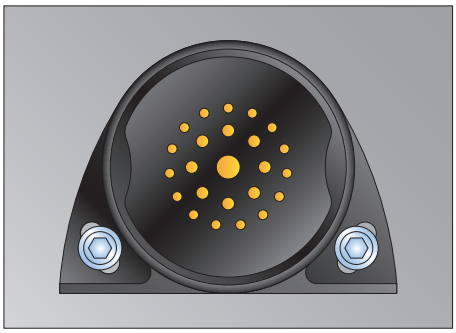

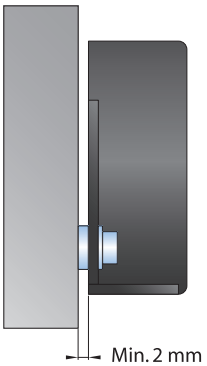



2x M6 screw, nut and washer
recommended for mounting

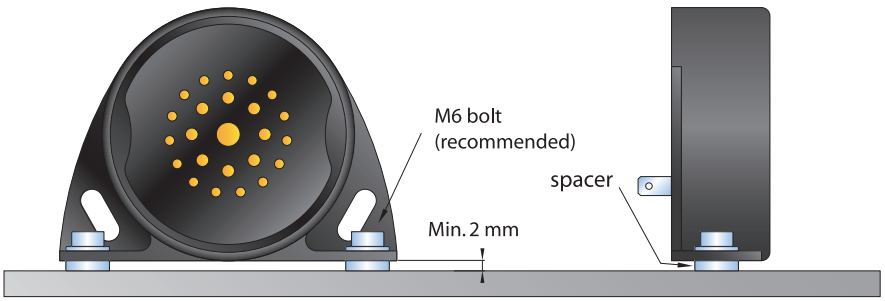

Packaging

One piece per box.



© The content, drawings and structure of this datasheet are protected by copyright laws. Any reproduction, publication, modification, distribution or exploitation of this information, whether in whole or in part, without an express written permission by Sonitron nv is prohibited.

Kasteelstraat 93, 9100 Sint-Niklaas • BELGIUM • Tel.: +32 3 780 76 30 • Fax: +32 3 777 58 96 • E-mail: sales@sonitron.be • Internet: http://www.sonitron.be