Operating instructions

Piston Metering Pump
Meta MTKa

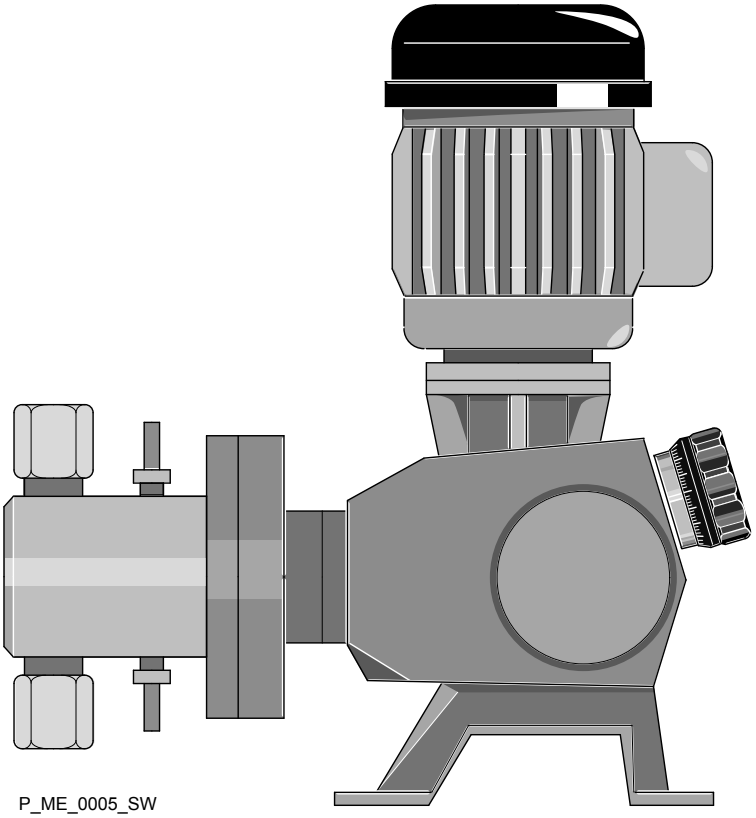

P_ME_0005_SW

Please carefully read these operating instructions before use. · Do not discard.
The operator shall be liable for any damage caused by installation or operating errors.
The latest version of the operating instructions are available on our homepage.

Part no. 985036 **Original operating instructions (2006/42/EC)** BA ME 010 02/14 EN

Supplementary information



Fig. 1: Please read!

Read the following supplementary information in its entirety! Should you already know this information, you will benefit more from referring to the operating instructions.

The following are highlighted separately in the document:

- Enumerated lists

→ Operating guidelines

⇨ Outcome of the operating guidelines

- see (reference)

Information

This provides important information relating to the correct operation of the unit or is intended to make your work easier.

Safety notes

Safety notes are identified by pictograms - see Safety Chapter.

Validity

These operating instructions conform to current EU regulations applicable at the time of publication.

State the identity code and serial number

Please state identity code and serial number, which you can find on the nameplate when you contact us or order spare parts. This enables the device type and material versions to be clearly identified.

EX pumps only

The nameplate stuck on the cover page is identical with the pump supplied so that a clear assignment is given between the operating instructions and the pump.

Table of contents

1 Identity code ... 4
2 Safety chapter ... 6
3 Storage, transport and unpacking ... 12
4 Overview of equipment, control elements ... 14
5 Functional description ... 15
6 Assembly ... 16
7 Installation ... 18
7.1 Installation, hydraulic ... 18
7.1.1 Basic installation notes ... 21
7.2 Installation, electrical ... 22
8 Start up ... 26
9 During Operation ... 28
10 Maintenance ... 29
11 Repairs ... 32
11.1 Changing the piston ... 33
12 Troubleshooting ... 35
13 Decommissioning and Disposal ... 37
13.1 Decommissioning ... 37
13.2 Disposal ... 38
14 Technical data ... 40
14.1 Performance data for Meta MTKa ... 41
14.2 Precision ... 43
14.2.1 Reproducibility ... 43
14.2.2 Metering precision ... 43
14.3 Viscosity ... 43
14.4 Wetted materials ... 43
14.5 Ambient conditions ... 44
14.5.1 Temperatures ... 44
14.5.2 Air humidity ... 44
14.6 Motor data ... 44
14.7 Housing degree of protection ... 45
14.8 Stroke sensor (optional), intrinsically safe ... 45
14.9 Sound pressure level ... 46
14.10 Supplement for modified versions ... 46
15 Meta MTKa dimensional drawing ... 47
16 Diagrams for adjusting the capacity MTKa ... 48
17 Motor data sheets ... 49
18 Spare parts ... 50
19 EC Declaration of Conformity for Machinery ... 51
20 EC Declaration of Conformity for Machinery Used in Areas at Risk of Explosion ... 52

1 Identity code

MTKa	Meta piston metering pump, version a										
	Power end type										
	H	Main power end									
	A	Add-on power end									
		Type									
		_ _ _ _ _	Performance data at maximum back pressure and type: refer to nameplate on the pump housing								
			Dosing head material								
			SS	Stainless steel							
				Seal material							
				T	PTFE						
					Displacement body						
					S	Oxide ceramic standard piston					
						Dosing head design					
						0	no valve springs				
						1	with 2 valve springs, Hasteloy C; 0.1 bar				
							Hydraulic connector				
							0	Standard threaded connector (in line with technical data)			
								Design			
								0	With ProMinent® logo, no frame		
								2	Without ProMinent® logo		
								M	Modified*	* order-specific design, see order paperwork for pump features	
									Electric power supply		
									_	Connection data - see nameplate on motor	
									1	No motor, with flange 90/63	
									0	Externally mounted pump (without motor)	
									2	No motor, with flange 140/71	
									3	No motor, with flange 160/71	
									4	No motor, with flange 56 C	
										Motor version	
										0	IP 55 (standard)
										1	Exe design ATEX-T3
										2	Exde design ATEX-T4
										A	ATEX design of power end
											Stroke sensor
											0 No stroke sensor
											1 Stroke sensor (Namur), intrinsically safe

MTKa	Meta piston metering pump, version a											
											Stroke length adjustment	
											0	Manual (standard)

2 Safety chapter

Identification of safety notes

The following signal words are used in these operating instructions to denote different severities of danger:

Signal word	Meaning
WARNING	Denotes a possibly dangerous situation. If this is disregarded, you are in a life-threatening situation and this can result in serious injuries.
CAUTION	Denotes a possibly dangerous situation. If this is disregarded, it could result in slight or minor injuries or material damage.

Warning signs denoting different types of danger

The following warning signs are used in these operating instructions to denote different types of danger:

Warning signs	Type of danger
	Warning – hand injuries.
	Warning – high-voltage.
	Warning – danger zone.

Intended use

- Only use the pump to meter liquid metering chemicals.
- In potentially explosive atmospheres in zone 1, device category II 2G, explosion group II C, only operate the pump with the appropriate nameplate (and the respective EC Declaration of Conformity) for pumps for use in areas at risk of explosion in compliance with Directive 94/9/EC in accordance with the European guidelines. The explosion group, category and degree of protection specified on the label should correspond to or be better than the conditions given in the intended field of application.
- Only start up the pump after it has been correctly installed and commissioned in accordance with the technical data and specifications contained in the operating instructions.
- Observe the general limitations with regard to viscosity limits, chemical resistance and density - see also ProMinent Resistance List (in the Product Catalogue or at www.prominent.com/en/downloads)!
- All other uses or modifications are prohibited.
- Never operate pumps without the relevant nameplate (and the respective EC Declaration of Conformity) for pumps for use in atmospheres at risk from explosion in atmospheres potentially at risk from explosion.
- The pump is not intended for the metering of gaseous media or solids.

- The pump is not intended to meter explosive substances and mixtures.
- The pump is not intended for the metering of flammable fluids.
- The pump is not intended for unprotected outside use.
- The pump is only intended for industrial use.
- The pump should only be operated by trained and authorised personnel, see the following table.
- You are obliged to observe the information contained in the operating instructions at the different phases of the device's service life.

Only the following combinations of identity codes are permitted in areas at risk from explosion:

Combi-nations	Identity code specification	values
1	Electric power supply	L, P
	Motor version	1, 2
2	Electric power supply	0, 1, 2, 3, 4
	Motor version	A

Qualification of personnel

Action	Qualification
Storage, transport, unpacking	Instructed person
Assembly	Technical personnel, service
Planning hydraulic installation	Certificated specialist personnel who have a thorough knowledge of diaphragm pumps
Hydraulic installation	Technical personnel, service
Installation, electrical	Electrical technician
Operation	Instructed person
Maintenance, repair	Technical personnel, service
Decommissioning, disposal	Technical personnel, service
Troubleshooting	Technical personnel, electrical technician, instructed person, service

Explanation of the terms:

Technical personnel

A qualified employee is deemed to be a person who is able to assess the tasks assigned to him and recognise possible dangers based on his/her technical training, knowledge and experience, as well as knowledge of pertinent regulations.

Note:

A qualification of equal validity to a technical qualification can also be gained by several years employment in the relevant work area.

Electrical technician

Electrical technicians are deemed to be people, who are able to complete work on electrical systems and recognise and avoid possible dangers independently based on their technical training and experience, as well as knowledge of pertinent standards and regulations.

Electrical technicians should be specifically trained for the working environment in which they are employed and know the relevant standards and regulations.

Electrical technicians must comply with the provisions of the applicable statutory directives on accident prevention.

Instructed person

An instructed person is deemed to be a person who has been instructed and, if required, trained in the tasks assigned to him/her and possible dangers that could result from improper behaviour, as well as having been instructed in the required protective equipment and protective measures.

Customer Service

Customer Service department refers to service technicians, who have received proven training and have been authorised by ProMinent or ProMaqua to work on the system.

Safety notes

Safety notes



CAUTION!

These operating instructions include notes and quotes from German guidelines relating to the system operator's scope of responsibility. This information does not discharge the operator from his responsibility as an operator and is intended only to remind him or make him aware of specific problem areas. This information does not lay claim to being complete, nor applicable to every country and every type of application, nor to being unconditionally up-to-date.



WARNING!

- Observe the European Operator Directive 99/92/EC (ATEX 137), implemented in Germany by the Industrial Health and Safety Regulation and the German Ordinance on Hazardous Substances, for the installation and operation of equipment in areas at risk from explosion.
- Observe the European standards EN 1127-1, EN 60079-10, EN 60079-14, EN 60079-17 and EN 60079-25 and EN 50039 for inherently safe electrical circuits. (In Germany these standards are partly implemented by VDE 0165 and VDE 0118).
- Adhere to the respective national regulations outside of the EU.
- Ensure that installations in areas at risk from explosion are checked by a "recognisably trained" skilled operative. This applies specifically to intrinsically safe electrical circuits.
- The following information relates essentially to the unique characteristics in areas at risk from explosion but does not replace the standard operating instructions.
- Only clean plastic parts carefully with a damp cloth to avoid electrostatic charges and sparks.



WARNING!

Warning of dangerous or unknown feed chemical

Should a dangerous or unknown feed chemical be used: It may escape from the hydraulic components when working on the pump.

- Take appropriate protective measures before working on the pump (e.g. safety glasses, safety gloves, ...). Observe the safety data sheet for the feed chemical.
- Drain and flush the liquid end before working on the pump.



WARNING!

Danger from hazardous substances!

Possible consequence: Fatal or very serious injuries.

Please ensure when handling hazardous substances that you have read the latest safety data sheets provided by the manufacture of the hazardous substance. The actions required are described in the safety data sheet. Check the safety data sheet regularly and replace, if necessary, as the hazard potential of a substance can be re-evaluated at any time based on new findings.

The system operator is responsible for ensuring that these safety data sheets are available and that they are kept up to date, as well as for producing an associated hazard assessment for the workstations affected.



CAUTION!

Warning of feed chemical spraying around

Feed chemical can spray out of the hydraulic components if they are manipulated or opened due to pressure in the liquid end and adjacent parts of the system.

- Disconnect the pump from the mains power supply and ensure that it cannot be switched on again by unauthorised persons.
- Depressurise the system before commencing any work on hydraulic parts.



CAUTION!

Warning of feed chemical spraying around

An unsuitable feed chemical can damage the parts of the pump contacted by the chemical.

- Take into account the resistance of the materials which will come into contact with the chemical when selecting the feed chemical - see the ProMinent Product Catalogue or visit www.prominent.com/en/downloads.



CAUTION!

Danger of personnel injury and material damage

The use of untested third party parts can result in personnel injuries and material damage.

- Only fit parts to metering pumps, which have been tested and recommended by ProMinent.



CAUTION!

Danger from incorrectly operated or inadequately maintained pumps

Danger can arise from a poorly accessible pump due to incorrect operation and poor maintenance.

- Ensure that the pump is accessible at all times.
- Adhere to the maintenance intervals.

Information in the event of an emergency

In the event of an electrical accident, disconnect the mains cable from the mains or press the emergency cut-off switch fitted on the side of the system!

If feed chemical escapes, also depressurise the hydraulic system around the pump as necessary. Adhere to the safety data sheet for the feed chemical.

Safety information relating to the operating instructions

Prior to commissioning the system or system component, the system operator is obliged to obtain the latest safety data sheet from the supplier for the chemicals / resources to be used with the system. The operator should create the legal framework for safe operation of the system or system component, such as for example the preparation of operating instructions (operator duties), based on the information provided in the data sheets concerning health and safety, water and environmental protection and taking into consideration the actual operating environment on site.

Safety equipment

Protective equipment

Protective equipment	May only be removed by*:
Terminal box cover, motor	Electrical technician, service
Protective cowling above the motor fan	Service
Flange cover, side	Service
Motor connection cover with add-on power end	Service
Turret protective cover	Technical personnel, service
Only with protective devices: their corresponding parts	Technical personnel, service

* Only if the mains cable remains disconnected (no mains voltage).

Other safety equipment

WARNING!

- Attach the following safety note to pumps that contain parts made of electrically non-conductive plastic:
- Ensure that the label is always fitted and legible.

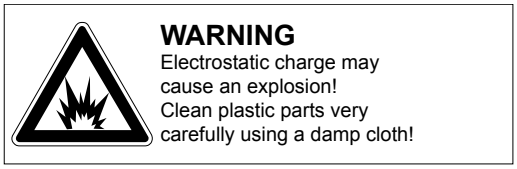

Fig. 2

Sound pressure level

Sound pressure level LpA < 70 dB according to EN ISO 20361

at maximum stroke length, maximum stroke rate, maximum back pressure (water)

3 Storage, transport and unpacking

Safety notes

WARNING!

The transporting of pumps which have been used with radioactive feed chemicals is forbidden!

They will also not be accepted by ProMinent!

WARNING!

Only return metering pumps for repair in a cleaned state and with a flushed liquid end - refer to "Decommissioning!

Only return metering pumps with a completed Decontamination Declaration form. The Decontamination Declaration constitutes an integral part of an inspection / repair order. A unit can only be inspected or repaired when a Declaration of Decontamination Form is submitted that has been completed correctly and in full by an authorised and qualified person on behalf of the pump operator.

You can find the "Decontamination Declaration" form at www.prominent.com/en/downloads or on the CD.

CAUTION!

Danger of environmental and material damage

The unit can be damaged or oil may escape due to incorrect or improper storage or transportation!

- The unit should only be stored or transported in a well packaged state - preferably in its original packaging.
- Only transport the unit with the locking screw - not the bleed plug - fitted to the oil filling opening.
- The packaged unit should also only be stored or transported in accordance with the stipulated storage conditions.
- The packaged unit should be protected from moisture and the ingress of chemicals.

Storage

Personnel: ■ Technical personnel

1. Plug the caps on the valves.
2. Check whether the seal screw is screwed into oil filler opening instead of the vent screw.
3. Preferably place the pump standing vertically on a pallet and secure against falling over.
4. Cover the pump with a tarpaulin cover - allowing rear ventilation.

Store the pump in a dry, sealed place in the following ambient conditions.

4 Overview of equipment, control elements

Power end

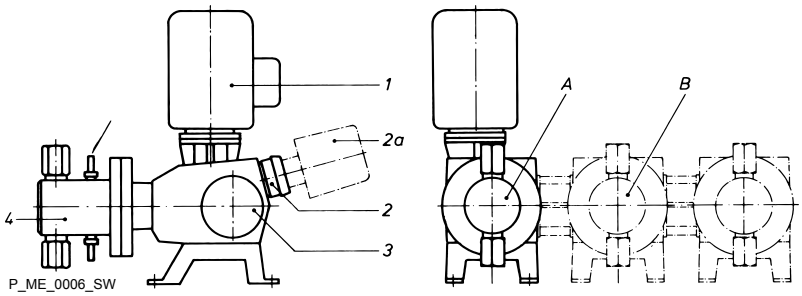

Fig. 3: Overview of the MTKa piston metering pump

1 Motor
2 Stroke length adjustment
2a Servomotor
3 Housing with gear
4 Liquid end
A Primary pump type MTKaH ...
B Externally mounted pump MTKaA ...

Liquid end

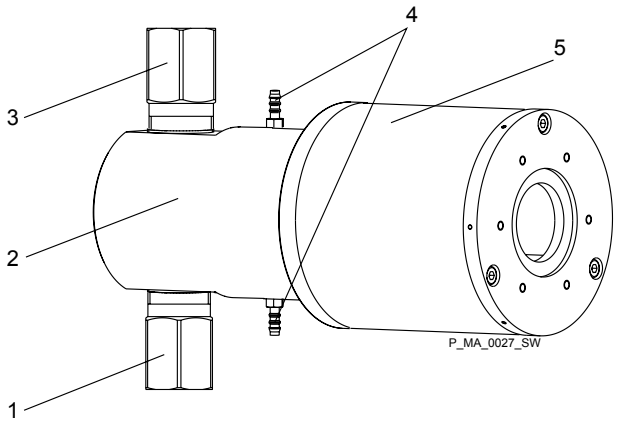

Fig. 4: View of the liquid end

1 Discharge valve
2 Dosing head
3 Suction valve
4 Hose nozzles for leakage/flushing connector
5 Protective cover

5 Functional description

Pump

The metering pump is an oscillating displacement pump, the stroke length of which can be adjusted. An electric motor drives the pump.

The heart of the liquid end is a highly resistant piston (4) made from coated stainless steel. The suction valve (1) closes as soon as the piston (4) is moved in to the dosing head and the feed chemical flows through the discharge valve (3) out of the dosing head. As soon as the piston moves in the opposite direction, the discharge valve (3) closes due to the negative pressure in the dosing head and fresh feed chemical flows through the suction valve (1) into the dosing head.

Use the flushing collar (6) to flush the sealing surface of the piston.

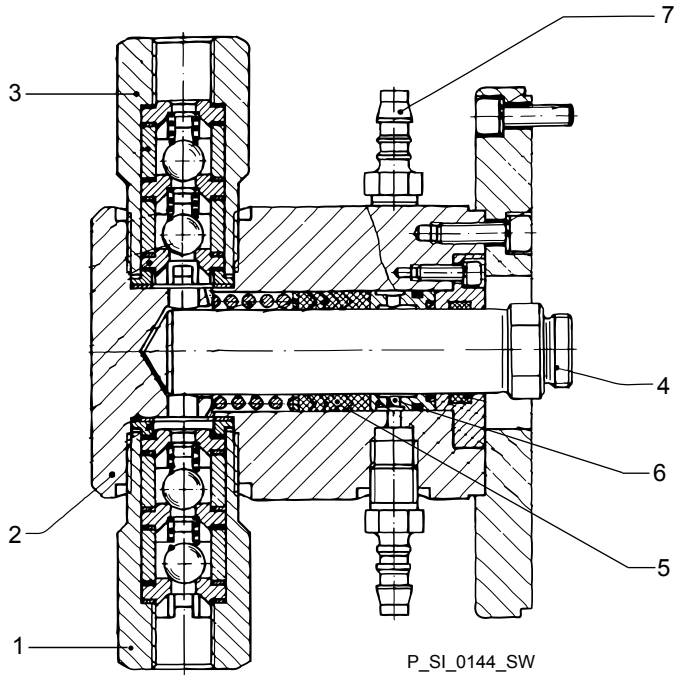

Fig. 5: Cross-section through the liquid end

1 Suction valve
2 Dosing head
3 Discharge valve
4 Piston
5 Packing collar
6 Flushing collar
7 Flushing connector

6 Assembly

Safety notes

– *Compare the dimensions on the dimension sheet and pump.*

Base

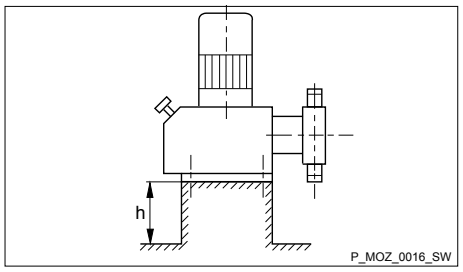

Fig. 6

WARNING!
Danger of electric shock
If water or other electrically conducting liquids penetrate into the drive housing, in any other manner than via the pump's suction connection, an electric shock may occur.

– Position the pump so that it cannot be flooded.

WARNING!
The pump can break through the base or slide off it

– Ensure that the base is horizontal, smooth and permanently load-bearing.

Capacity too low
Vibrations can disrupt the liquid end valves.

– *The supporting floor must not vibrate.*

Space requirement

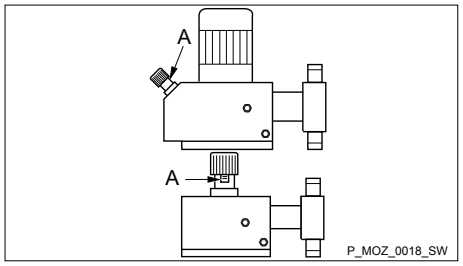

Fig. 7

CAUTION!
Danger from incorrectly operated or inadequately maintained pumps
Danger can arise from a poorly accessible pump due to incorrect operation and poor maintenance.

– Ensure that the pump is accessible at all times.
– Adhere to the maintenance intervals.

Install the pump so that control elements, such as the stroke length adjustment knob, the indicating dial A or the oil inspection window, are accessible.

In so doing, ensure there is enough space to carry out an oil change (vent screws, oil drainage screws, oil trough ...).

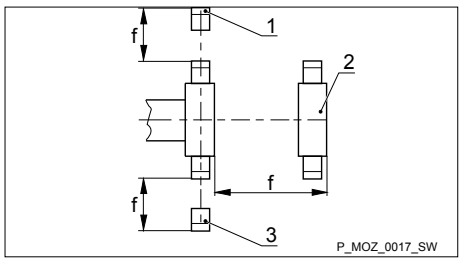

Fig. 8

1 Discharge valve
2 Dosing head
3 Suction valve

Ensure that there is sufficient free space (f) around the dosing head, as well as the suction and discharge valve, so that maintenance and repair work can easily be carried out on these components.

Liquid end alignment

Capacity too low

If the liquid end valves are not upright, they cannot close correctly.

– *Ensure that the discharge valve is upright.*

Fastening

Capacity too low

Vibrations can disrupt the liquid end valves.

– *Secure the metering pump so that no vibrations can occur.*

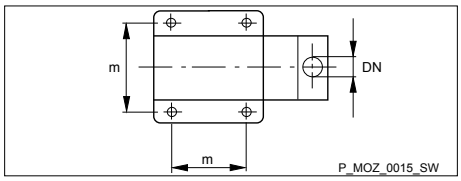

Fig. 9

Take the dimensions (m) for the fastening holes from the appropriate dimensional drawings or data sheets.

Fasten the pump base to the base using suitable screws.

Instructions

→ Screw the pump to the support surface with 4 sufficiently strong screws through the 4 holes in the frame.

7 Installation

7.1 Installation, hydraulic



WARNING!

EX pumps in areas at risk from explosion

- It is essential that metering pumps to be used in areas at risk from explosion are fitted with an appropriate safety relief valve on the outlet side of the metering pump (to protect it from excessive heating up from overloading and from impact sparks resulting from overloading triggered by the breakage of drive parts).
- Piston metering pumps are designed for applications in temperature class T3. Pumps are suitable for T4 with an additional flow control on the outlet side (to protect it from excess temperature following running dry) or a suitable temperature monitor.
- In the event of differing temperature classes amongst the diverse components, operation of the complete pumps should be based on the component with the lowest temperature class.
- Ensure that installations in areas at risk from explosion are checked by a "recognisably trained" skilled operative.
- Please note the relevant national regulations during installation!



WARNING!

Warning of feed chemical reactions to water

Feed chemicals that should not come into contact with water may react to residual water in the liquid end that may originate from works testing.

- Blow the liquid end dry with compressed air through the suction connector.
- Then flush the liquid end with a suitable medium through the suction connector.



WARNING!

The following measures are an advantage when working with highly aggressive or hazardous feed chemicals:

- Install a bleed valve with recirculation in the storage tank.
- Install an additional shut-off valve on the discharge or suction ends.



CAUTION!

Warning of backflow

A back pressure valve or a spring-loaded injection valve do not represent absolutely leak-tight closing elements.

- For this purpose use a shut-off valve, a solenoid valve or a vacuum breaker.

CAUTION!

Suction problems possible

The valve may no longer close properly with feed chemicals with a particle size greater than 0.3 mm.

– Install a suitable filter in the suction line.

CAUTION!

Warning against the discharge line rupturing

With a closed discharge line (e.g. due to a clogged discharge line or by closing a valve), the pressure that the metering pump generates can reach several times the permissible pressure of the system or the metering pump. This could lead to lines bursting, resulting in dangerous consequences with aggressive or toxic feed chemicals.

– Install a relief valve that limits the pressure of the pump to the maximum permissible operating pressure of the system.

CAUTION!

Warning against the discharge line bursting

Hose lines with insufficient pressure rating may burst.

– Only use hose lines with the required pressure rating.

CAUTION!

Uncontrolled flowing feed chemicals

Feed chemical can leak through a stopped metering pump when there is back pressure.

– Use an injection valve or vacuum breaker for this purpose.

CAUTION!

Uncontrolled flowing feed chemical

Feed chemical can leak through the metering pump in an uncontrolled manner in the event of excessive priming pressure on the suction side of the metering pump.

– Do not exceed the maximum permissible priming pressure for the metering pump.
– Organise installation properly.

CAUTION!

Warning against lines coming loose

Suction, discharge and relief lines installed incorrectly can come loose from the pump connection.

- Only use original hoses with the specified tube diameter and wall thickness.
- Only use clamp rings and hose nozzles that correspond to the respective hose diameter.
- Always connect the lines without mechanical tension.

  Only connect steel piping via a flexible piping section to a plastic valve body - see the following figure.

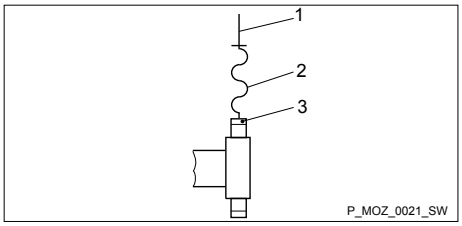

Fig. 10: Connect the steel piping to the plastic pump body as shown

1 Steel pipe
2 Flexible pipe section
3 Plastic valve body

CAUTION!

Warning of feed chemical spraying around

PTFE seals, which have already been used / compressed, can no longer reliably seal a hydraulic connection.

- New, unused PTFE seals must always be used.

CAUTION!

Warning of backflow

Liquid ends, foot valves, back pressure valves, relief valves or spring-loaded injection valves do not constitute absolutely leak-tight sealing elements.

- Use a shut-off valve, a solenoid valve or a vacuum breaker for this purpose.

- *Precise metering is only possible when the back pressure is maintained above 1 bar at all times.*
- *If metering at atmospheric pressure, a back pressure valve should be used to create a back pressure of approx. 1.5 bar.*

Route the leakage liquid drainage line

The leaked liquid is drained off via the flushing collar and a hose nozzle, without other parts of the liquid end coming into contact with the medium.

1. Connect a hose to the lower hose nozzle.
2. Route the hose into a collection vessel for the leakage liquid.

7.1.1 Basic installation notes

Safety notes

CAUTION!

Danger resulting from rupturing hydraulic components

Hydraulic components can rupture if the maximum permissible operating pressure is exceeded.

- Never allow the metering pump to run against a closed shut-off device.
- Install a relief valve in the discharge line.

CAUTION!

Hazardous feed chemicals can escape

With hazardous feed chemicals: Hazardous feed chemical can leak out when using conventional bleeding procedures with metering pumps.

- Install a bleed line with a return into the storage tank.

→ Shorten the return line so that it does not dip into the feed chemical in the storage tank.

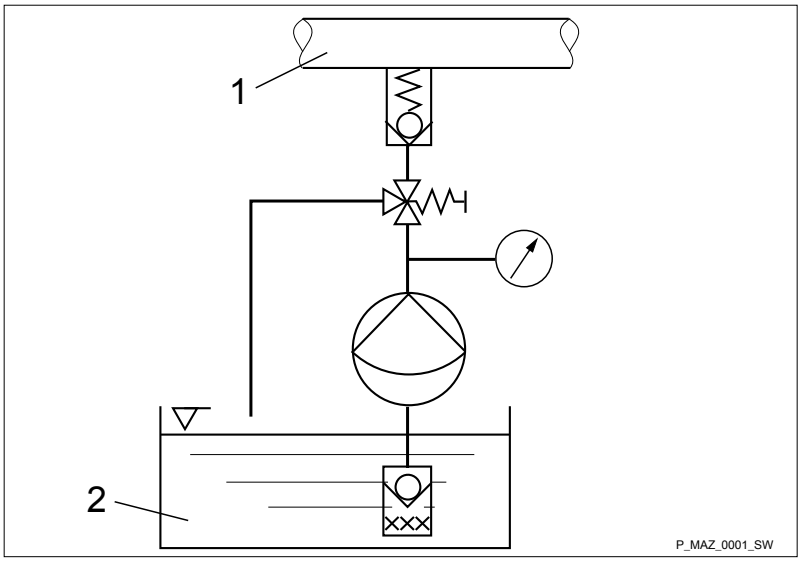

Fig. 11: Standard installation

1 Main line
2 Storage tank

Legend for hydraulic diagram

Symbol	Explanation	Symbol	Explanation
	Metering pump		Foot valve with filter meshes
	Injection valve		Level switch
	Multifunctional valve		Manometer

7.2 Installation, electrical



WARNING!

EX pumps in areas at risk from explosion

- Potential-free switches can be evaluated as simple electrical devices (EN 60079-14 or EN 50020).
- Only connect potential-free as well as non-isolating low voltage switch accessories, such as diaphragm rupture indicators, stroke frequency instruments etc., to an intrinsically safe power circuit in areas at risk from explosion.
- If several electrical components are connected together, test and confirm the technical safety of the entire connected system. This can either be in the form of a declaration of conformity from the supplier (ProMinent) for the entire unit or, with the supply of individual components, with the operator's explosion protection document.
- Only motor protection switches, mains switches and fuses permitted for use in areas at risk from explosion in line with the manufacturer's information may be used as electrical components in areas at risk from explosion.
- Note the enclosed documentation for the individual electrical components.



WARNING!

Danger of electric shock

Unprofessional installation may lead to electric shocks.

- Provide all shortened cable cores with cable end sleeves.
- Only technically trained personnel are authorised to undertake the electrical installation of the device.



WARNING!

Danger of electric shock

In the event of an electrical accident, it must be possible to quickly disconnect the pump, and any electrical ancillaries which may possibly be present, from the mains.

– Install an emergency cut-off switch in the mains supply line to the pump and any electrical ancillaries which may be present or
– Integrate the pump and electrical ancillaries which may be present in the emergency cut-off management of the system and inform personnel of the isolating option.



WARNING!

Danger of electric shock

This pump is equipped with a protective earth conductor, to reduce the risk arising from an electric shock.

– Connect the PE conductor to "earth" with a clean and permanent electrical connection.



WARNING!

Danger of electric shock

A mains voltage may exist inside the motor or electrical ancillaries.

– If the housing of the motor or electrical ancillaries has been damaged, you must disconnect it from the mains immediately. The pump must only be returned to service after an authorised repair.

What requires electrical installation?

- Motor
- External fan (optional)
- Stroke control drive (optional)
- Stroke adjusting drive (optional)
- Stroke sensor (optional)
- Frequency converter (optional)

Motor

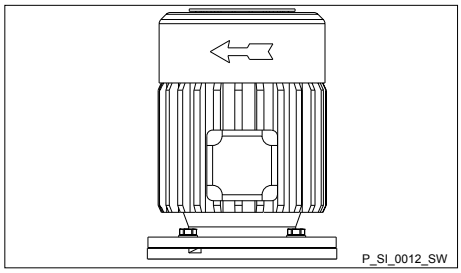

Fig. 12: Direction of rotation of motor

WARNING!

EX pumps in areas at risk from explosion

- Protect drive motors with appropriate motor protection switches. Only use motor protection permitted for this kind of application with Ex"e" motors. (Protection against heating from overloading)
- Ensure that motors are only installed and inspected by a "recognisably trained" skilled operative in areas at risk from explosion.
- Observe the enclosed operating instructions for the Ex motor.

CAUTION!

The motor can be damaged

Provide appropriate motor protection devices (e.g. motor protection switch with thermal overcurrent trip) to protect the motor against overloading.

Fuses do not provide motor protection.

CAUTION!

The pump can be damaged

The pump can be damaged if the motor drives the pump in the wrong direction.

- When connecting the motor, pay attention to the correct direction of rotation indicated by the arrow on the fan cover, as shown in Fig. 12.

Install an electrical isolating device in the mains supply cable, e.g. a mains switch, to be able to switch off the pump independently of the entire installation (e.g. for repair).

1. Install a motor protection switch, as the motors have no fuse.
2. Install an emergency cut-off switch or include the motor in the emergency cut-off management plan for the system.
3. Use a suitable cable between the motor terminal box and power supply.

- *Key motor data can be found on the motor nameplate.*
- *Motor data sheets can be requested for more information.*
- *The terminal wiring diagram is located in the terminal box.*

External fan

CAUTION!
Provide a separate power supply for the external fan with motors with external fans (identity code specification "R" or "Z").

Variable speed motors with frequency converter

Connect up the motor as per the wiring diagram for the controller, if it is controlled by an electronic control unit (such as direct current motors by a frequency converter).

Stroke length actuators / control drives

Connect the motors as per the enclosed wiring diagram or the wiring diagram on the inside of the housing.

CAUTION!
Only operate stroke length actuators / control drives when the pump is running!

Otherwise they will be damaged.

Stroke sensor (optional)

→ Connect the stroke sensor to a suitable monitoring device according to the technical data provided with the monitoring device and that of the stroke sensor - see chapter "Technical data".

Other units

→ Install the other units in line with their documentation.

8 Start up

Safety notes

WARNING!

EX pumps in areas at risk from explosion

– An appropriately skilled operative should check whether the appropriate installation information from the "Installation " chapter has been implemented correctly.

CAUTION!

Possible environmental and material damage

The screw plug in the oil filler neck is factory-fitted and, during operation, prevents any pressure equalisation between the power end housing and the surroundings. This ensure that oil can be pushed from the power end housing.

– Replace the screw plug on the oil filler neck by the air vent plug supplied.
– Retain the sealing plug for subsequent transport of the unit.

CAUTION!

Liquid end can be damaged

– Always fit a filter in the suction line with feed chemicals with a particle size greater than 0.3 mm

CAUTION!

Feed chemical could escape

– Check suction and discharge lines and liquid end with valves for leak-tightness and tighten if necessary.
– Check whether the necessary flushing pipes or bleed lines have been connected.

CAUTION!

Prior to commissioning, check that the power end motor and corresponding ancillary equipment is connected in compliance with the regulations.

CAUTION!

When using pumps with speed control, observe the instructions in the frequency converter operating instructions.

Installing a vent screw

Replace the sealing screw on the oil filler neck with the vent screw supplied - see chapter "Overview of equipment and control elements".

Checking the oil level

When the pump is idle, check whether the pump oil level slightly covers the oil inspection window.

This indicates that the pump has not lost oil and consequently been damaged.

Checking the direction of rotation

When commissioning the unit, check whether the drive motor is rotating correctly - check this against the arrow on the motor housing or the diagram in the chapter entitled "Electrical Installation."

Adjusting the stroke length



The stroke length can only be adjusted when the machine is stationary, provided the liquid ends are depressurised.

Checking for leakage

Check whether the leakage for the feed chemical used is between 10 and 120 drops /min.

The pump can now be handed over for operation.

9 During Operation

WARNING!

Personnel injury and material damage may occur

During use all units, protective equipment, additional devices must be fitted, operational and tightly closed.

WARNING!

Sparking caused by dry running

If the bearings in the power end run dry, sparks can be formed.

- Check for oil leaks.
- When the pump is idle, the pump oil level must slightly cover the lower oil inspection window.

Observe the instructions in the "Start up" chapter and the operating instructions for the other machine components.

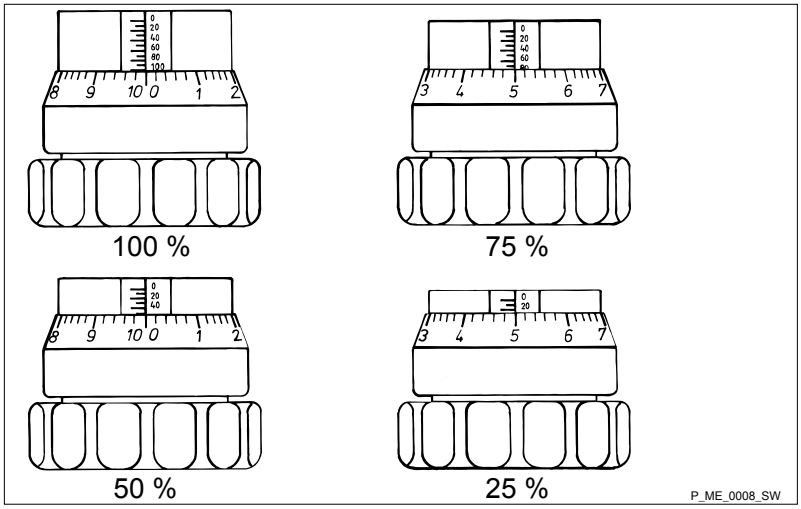

Fig. 13: 1 revolution (360°) = 10 % stroke length

10 Maintenance

Safety notes

WARNING!

EX pumps in areas at risk from explosion

- Ensure correct operation in general, particularly of the power end and bearing, by regular monitoring (for leaks, noises, temperatures, smell ...).
- Do not allow the pump to become hot due to a lack of oil.

  Regularly check lubricated metering pumps for the existence of lubricant, for example by checking the liquid level, visual leak control etc. If oil is leaking, examine the leakage point immediately and eliminate the cause.
- Check the correct operation of the relief valve downstream of the pump. In premises at risk from explosion, the relief valve should prevent the gear from becoming overloaded and becoming hot.
- When cleaning plastic components, ensure that no electrostatic charges are generated by excessive friction. - see warning label.
- Replace wear parts, such as bearings, as soon as unacceptable wear is detected. (The nominal service life cannot be calculated with lubricated bearings).
- Use genuine spare parts for replacement.
- Only perform tests and repairs in compliance with DIN EN IEC 60079-17 and only permit "experienced personnel who have the requisite knowledge" to perform the work.
- These measures constitute the minimum protective measurements stipulated by ProMinent. It is the duty of the operator to eliminate any other dangers identified by appropriate measures.

WARNING!

It is mandatory that you read the safety information and specifications in the "Storage, Transport and Unpacking" chapter prior to shipping the pump.

WARNING!

Warning of dangerous or unknown feed chemical

Should a dangerous or unknown feed chemical be used: It may escape from the hydraulic components when working on the pump.

- Take appropriate protective measures before working on the pump (e.g. safety glasses, safety gloves, ...). Observe the safety data sheet for the feed chemical.
- Drain and flush the liquid end before working on the pump.



WARNING!

Danger of an electric shock

When working on the motor or electrical auxiliary equipment, there is a danger of an electric shock.

– Before working on the motor, take note of the safety instructions in its operating instructions!
– Should external fans, servomotors or other auxiliary equipment be installed, these should also be disconnected and checked that they are voltage free.



WARNING!

Risk of fingers being crushed

Under unfavourable conditions, the stroke axle or displacement body can cause crushing of the fingers.

– Disconnect the pump from the mains power supply and ensure that it cannot be switched on again by unauthorised persons.



WARNING!

Risk of injury from the fan impeller

The fan impeller beneath motor's fan cowling can cause severe injuries while it is turning.

– The pump must only be connected to the mains voltage with the fan cowling closed.



CAUTION!

Warning of feed chemical spraying around

Feed chemical can spray out of the hydraulic components if they are manipulated or opened due to pressure in the liquid end and adjacent parts of the system.

– Disconnect the pump from the mains power supply and ensure that it cannot be switched on again by unauthorised persons.
– Depressurise the system before commencing any work on hydraulic parts.

Maintenance work



Under heavy loading (e.g. continuous operation) shorter maintenance intervals are recommended than those given.



Third party spare parts for the pumps may lead to problems when pumping.

– *Use only original spare parts.*
– *Use the correct spare parts kits. If in doubt, refer to the exploded views in the Appendix.*

Interval	Maintenance work
quarterly*	Check that the dosing head flange screws and turret flange screws are correctly seated.
	Check that the discharge valve and suction valve are correctly seated.
	Check the correct seating and state of the metering lines at both discharge and suction ends.
	Check the oil level.
	Check that the electrical connections are intact.
	Check whether the pump is transporting media correctly - run briefly at high power. Observe the maximum permissible operating pressure!
	Check whether leakage is correct: 10 ... 120 drops / min.

Interval	Maintenance work
After approx. 5,000 operating hours *	Change the gear oil.

* Under normal loading (approx. 30 % of continuous operation)

Under heavy loading (e.g. continuous operation): Shorter intervals.

Changing the gear oil



WARNING!

Risk of burns due to hot gear oil

The gear oil may become very hot when the pump is heavily loaded

– When draining oil, avoid contact with the oil running out.

Tab. 1: Gear oil

Gear oil	Supplied quantity	Part no.
Mobilgear 634 VG 460	1.0 l	1004542

Tab. 2: Gear oil filling volumes

Types	Volume, approx.
All	approx. 0.5 l

11 Repairs

Safety notes



WARNING!

EX pumps in areas at risk from explosion

– Ensure correct operation in general, particularly of the power end and bearing, by regular monitoring (for leaks, noises, temperatures, smell ...).



WARNING!

It is mandatory that you read the safety information and specifications in the "Storage, Transport and Unpacking" chapter prior to shipping the pump.



WARNING!

Warning of dangerous or unknown feed chemical

Should a dangerous or unknown feed chemical be used: It may escape from the hydraulic components when working on the pump.

– Take appropriate protective measures before working on the pump (e.g. safety glasses, safety gloves, ...). Observe the safety data sheet for the feed chemical.
– Drain and flush the liquid end before working on the pump.



WARNING!

Risk of fingers being crushed

Under unfavourable conditions, the stroke axle or displacement body can cause crushing of the fingers.

– Disconnect the pump from the mains power supply and ensure that it cannot be switched on again by unauthorised persons.



WARNING!

Risk of injury from the fan impeller

The fan impeller beneath motor's fan cowling can cause severe injuries while it is turning.

– The pump must only be connected to the mains voltage with the fan cowling closed.

CAUTION!

Warning of feed chemical spraying around

Feed chemical can spray out of the hydraulic components if they are manipulated or opened due to pressure in the liquid end and adjacent parts of the system.

– Disconnect the pump from the mains power supply and ensure that it cannot be switched on again by unauthorised persons.
– Depressurise the system before commencing any work on hydraulic parts.

11.1 Changing the piston

Installing the piston and doing head

1. Loosely attach the piston to the slide rod using the connecting nut.
2. Push the complete dosing head onto the piston and screw tightly to the flange
3. Now tighten the piston using the connecting nuts.

Commissioning packing collars

Correct pressure of the tensioning screw

Packing collars should limit, not prevent, the escape of feed chemical. Leakage is necessary to reduce friction and dissipate the resulting friction heat.

In Fig. 14, the feed chemical B presses from the left between piston b or the dosing head and the packing collar a (drop on the right!). The tensioning screw A (not shown) presses on the packing collar from the right.

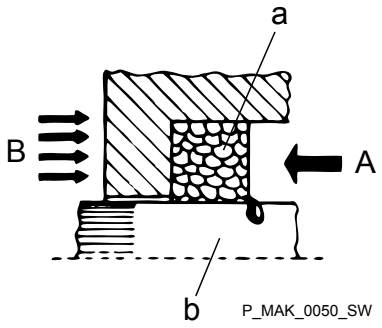

Fig. 14: Correct pressure of the tensioning screw

A Tensioning screw pressure
B Feed chemical pressure
a Packing collar
i Piston

Allow the pump to run with this leak for the first 10 ... 15 minutes:

Leakage in the first 10 ... 15 min.	50 ... 200 drops / min

Then:

1. Stop the pump.
2. Remove the protective cover.
3. Carefully tighten the tensioning screw.
4. Clamp the protective cover over the turret.
5. Start the pump.
6. Check the leakage.

Repeat steps 1 – 6 until minimum leakage is achieved:

Minimum leakage	10 ... 120 drops / min

The minimum leakage depends on the feed chemical, the feed chemical pressure, the temperature and the piston speed.

CAUTION!

The piston may be damaged

If the tensioning screw pressure is too high, low flow can occur and then result in damage to the piston and the packing collars.

– Do not over-tighten the tensioning screw.

The result of too high tensioning screw pressure

The feed chemical can no longer press though the packing collars - liquid lubrication is prevented. The piston runs dry. As a result the packing collars are scorched/burnt and the piston damaged. Leakage increases greatly.

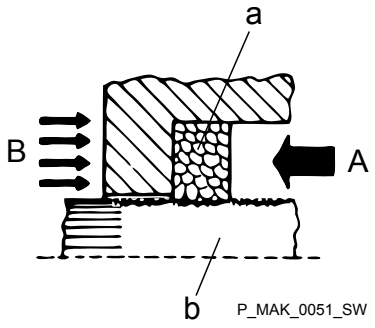

Fig. 15: The result of too high tensioning screw pressure

A Tensioning screw pressure
B Feed chemical pressure
a Packing collar
i Piston

12 Troubleshooting

Safety notes



WARNING!

EX pumps in areas at risk from explosion

- Ensure correct operation in general (no leaks, unusual noises, high temperatures, unusual smells etc.), particularly of the power end and bearings.
- Do not allow the pump to become hot due to a lack of oil!

  If oil is escaping, investigate the leak immediately and eliminate the cause.
- When cleaning plastic parts, ensure that excessive friction does not cause electrical charges - see warning label.
- Replace wear parts, such as bearings, as soon as unacceptable wear is detected. (The nominal service life cannot be calculated with lubricated bearings).
- Use genuine spare parts for replacement.
- Only perform tests and repairs in compliance with DIN EN IEC 60079-17 and only permit "experienced personnel who have the requisite knowledge" to perform the work.



WARNING!

Danger of an electric shock

Personnel working on electrical parts can be electrocuted if all electrical lines carrying current have not been disconnected.

- Disconnect the supply cable before working on the motor and prevent it from being reconnected accidentally.
- Any separately driven fans, servo motors, speed controllers or diaphragm rupture sensors fitted should also be disconnected.
- Check that the supply cables are de-energised.



WARNING!

Warning of dangerous or unknown feed chemical

Should a dangerous or unknown feed chemical be used: It may escape from the hydraulic components when working on the pump.

- Take appropriate protective measures before working on the pump (e.g. safety glasses, safety gloves, ...). Observe the safety data sheet for the feed chemical.
- Drain and flush the liquid end before working on the pump.



WARNING!

Risk of injury from the fan impeller

The fan impeller beneath motor's fan cowling can cause severe injuries while it is turning.

– The pump must only be connected to the mains voltage with the fan cowling closed.



CAUTION!

Danger of personnel injury and material damage

The use of untested third party parts can result in personnel injuries and material damage.

– Only fit parts to metering pumps, which have been tested and recommended by ProMinent.



CAUTION!

Warning of feed chemical spraying around

Feed chemical can spray out of the hydraulic components if they are manipulated or opened due to pressure in the liquid end and adjacent parts of the system.

– Disconnect the pump from the mains power supply and ensure that it cannot be switched on again by unauthorised persons.
– Depressurise the system before commencing any work on hydraulic parts.

Tasks

Fault description	Cause	Remedy	Personnel
Pump does not prime in spite of full stroke motion and bleeding.	The valves are dirty or worn.	Repair the valves.	Technical personnel
Pump does not reach high pressure rates.	The valves are dirty or worn.	Repair the valves.	Technical personnel
	The feed chemical has particles larger than 0.3 mm.	Install a suitable filter in the suction line.	Technical personnel
	The motor is wired incorrectly.	1. Check the mains voltage and mains frequency. 2. Wire the motor correctly.	Electrician
	The mains voltage has failed.	Eliminate the cause.	Electrician
The power end motor is very hot.	The discharge line is seriously constricted.	■ Rectify any constriction of the discharge line.	Technical personnel
All other faults.	Other causes.	Call ProMinent® Service.	

13 Decommissioning and Disposal

13.1 Decommissioning



WARNING!

Danger of an electric shock

When working on the motor or electrical auxiliary equipment, there is a danger of an electric shock.

- Before working on the motor, take note of the safety instructions in its operating instructions!
- Should external fans, servomotors or other auxiliary equipment be installed, these should also be disconnected and checked that they are voltage free.



WARNING!

Danger from chemical residue

There is normally chemical residue in the liquid end and on the housing after operation. This chemical residue could be hazardous to people.

- It is mandatory that the safety notes relating to the "Storage, Transport and Unpacking" chapter are read before shipping or transporting the unit.
- Thoroughly clean the liquid end and the housing of chemicals and dirt. Adhere to the safety data sheet for the feed chemical.



WARNING!

Warning of dangerous or unknown feed chemical

Should a dangerous or unknown feed chemical be used: It may escape from the hydraulic components when working on the pump.

- Take appropriate protective measures before working on the pump (e.g. safety glasses, safety gloves, ...). Observe the safety data sheet for the feed chemical.
- Drain and flush the liquid end before working on the pump.



CAUTION!

Warning of feed chemical spraying around

Feed chemical can spray out of the hydraulic components if they are manipulated or opened due to pressure in the liquid end and adjacent parts of the system.

- Disconnect the pump from the mains power supply and ensure that it cannot be switched on again by unauthorised persons.
- Depressurise the system before commencing any work on hydraulic parts.

CAUTION!

Danger of damage to the device

The device can be damaged by incorrect and improper storage or transportation.

– Take into account the information in the "Storage, Transport and Unpacking" chapter if the system is decommissioned for a temporary period.

Final decommissioning

1. Disconnect the pump from the mains power supply.
2. Depressurise and bleed the hydraulic system around the pump.
3. Flush the liquid end with a suitable medium - Observe the safety data sheet! Flush the dosing head thoroughly when using hazardous feed chemicals!
4. Drain the gear oil - refer to the chapter entitled "Maintenance".
5. Thoroughly clean the liquid end and the housing of chemicals and dirt.
6. Possible additional work - see chapter "Storage, Transport and Unpacking".

Temporary decommissioning

In addition:

1. Plug the caps on the valves.
2. Push the caps into place on the hose nozzles.
3. Preferably place the pump on a pallet.
4. Cover the pump with a tarpaulin cover - allowing rear ventilation!
5. Store the pump in a dry, sealed place under storage conditions in accordance with the chapter "Storage, Transport and Unpacking".

13.2 Disposal

CAUTION!

Environmental hazard due to gear oil

The pump contains gear oil, which can cause damage to the environment.

– Drain the gear oil from the pump.
– Note the local guidelines currently applicable in your country!



CAUTION!

Note the local guidelines generally currently applicable in your country!

14 Technical data

Only for "M - modified" design:



WARNING!

Risk of personal injuries

Please observe the ”Supplement for modified version“ at the end of the chapter!

It replaces and supplements the technical data!

14.1 Performance data for Meta MTKa

Main pumps with 1500 rpm motor at
50 Hz operation

Type	Minimum pump capacity at maximum back pressure			Maximum stroke rate	Suction lift	Connector size	Motor capacity	Shipping weight*
	bar	l/h	ml/ stroke	Strokes/min	m WS	G-DN	kW	kg
21606	216	6.1	1.42	72	4	1/4	0.18	18
24006	240	6.1	1.42	72	4	1/4	0.37	20
16208	162	8.1	1.42	96	4	1/4	0.18	18
22508	225	8.1	1.42	96	4	1/4	0.37	20
12910	129	10.2	1.42	120	4	1/4	0.18	18
21610	216	10.2	1.42	120	4	1/4	0.37	20
10812	108	12.2	1.42	144	4	1/4	0.18	18
21012	210	12.2	1.42	144	4	1/4	0.37	20
10213	102	13	3.01	72	4	1/4	0.18	18
11313	113	13	3.01	72	4	1/4	0.37	20
07617	76	17.3	3.01	96	4	1/4	0.18	18
10617	106	17.3	3.01	96	4	1/4	0.37	20
06122	61	21.7	3.01	120	4	1/4	0.18	18
10222	102	21.7	3.01	120	4	1/4	0.37	20
05126	51	26	3.01	144	4	1/4	0.18	18
09926	99	26	3.01	144	4	1/4	0.37	20
05425	54	24.6	5.71	72	4	3/8	0.18	18
06025	60	24.6	5.71	72	4	3/8	0.37	20
04033	40	32.8	5.71	96	4	3/8	0.18	18
05633	56	32.8	5.71	96	4	3/8	0.37	20
03241	32	41.1	5.71	120	4	3/8	0.18	18
05441	54	41.1	5.71	120	4	3/8	0.37	20
02749	27	49.3	5.71	144	4	3/8	0.18	18
05249	52	49.3	5.71	144	4	3/8	0.37	20

* The shipping weight applies to single head pumps without an add-on power end.

The permissible priming pressure at the suction side is approximately 50% of the max. permitted back pressure

All figures refer to water at 20 °C.

The suction lift applies to filled suction line and filled liquid end - when installed correctly.

Main pumps with 1800 rpm motor
under 60 Hz operation

Type	Minimum pump capacity at maximum back pressure		Maximum stroke rate	Suc-tion lift	Connector size	Motor capacity	Shipping weight*
	psi	l/h/gph	Strokes/min	m WS	G-DN	kW	kg
21606	3130	7.3/1.9	86	4	1/4	0.18	18
24006	3477	7.3/1.9	86	4	1/4	0.37	20
16208	2347	9.8/2.5	115	4	1/4	0.18	18
22508	3260	9.8/2.5	115	4	1/4	0.37	20
12910	1878	12.2/3.2	144	4	1/4	0.18	18
21610	3130	12.2/3.2	144	4	1/4	0.37	20
10812	1565	14.7/3.8	173	4	1/4	0.18	18
21012	3043	14.7/3.8	173	4	1/4	0.37	20
10213	1479	15.6/4.0	86	4	1/4	0.18	18
11313	1644	15.6/4.0	86	4	1/4	0.37	20
07617	1109	20.8/5.4	115	4	1/4	0.18	18
10617	1541	20.8/5.4	115	4	1/4	0.37	20
06122	888	26.0/6.8	144	4	1/4	0.18	18
10222	1479	26.0/6.8	144	4	1/4	0.37	20
05126	740	31.2/8.2	173	4	1/4	0.18	18
09926	1438	31.2/8.2	173	4	1/4	0.37	20
05425	782	29.5/7.7	86	4	3/8	0.18	18
06025	869	29.5/7.7	86	4	3/8	0.37	20
04033	587	39.4/10.3	115	4	3/8	0.18	18
05633	815	39.4/10.3	115	4	3/8	0.37	20
03241	469	49.3/12.9	144	4	3/8	0.18	18
05441	782	49.3/12.9	144	4	3/8	0.37	20
02749	391	59.2/15.6	173	4	3/8	0.18	18
05249	761	59.2/15.6	173	4	3/8	0.37	20

* The shipping weight applies to single head pumps without an add-on power end.

The permissible priming pressure at the suction side is approxi-mately 50% of the max. permitted back pressure

All figures refer to water at 20 °C.

The suction lift applies to filled suction line and filled liquid end - when installed correctly.

14.2 Precision

14.2.1 Reproducibility

Data	Value	Unit
Reproducibility	±0.5	% *

* for measurements taken under constant conditions, minimum 10 % stroke rate and water at 20 °C - when installed correctly, p< 1 bar

14.2.2 Metering precision

Data	Value	Unit
Metering precision	±1	% *

* at maximum stroke length and maximum back pressure

14.3 Viscosity

The liquid ends are generally suitable for the following viscosity ranges:

Design	Range	Unit
no valve springs	0 ... 200	mPas
with valve springs	200 ... 500	mPas
with appropriately designed installation	500 ... 1000	mPas
with appropriately designed installation and advice from ProMinent	> 1000	mPas

* Only when the installation is correctly adjusted

14.4 Wetted materials

Material version	Liquid end	Suction/ pressure connector	Seals	Valve balls	Valve seat	Piston
SST	Stainless steel 1.4404	Stainless steel 1.4404	PTFE/PTFE with graphite	Ceramic	Stainless steel 1.4404	Ceramic

14.5 Ambient conditions

14.5.1 Temperatures

Pump, compl.

Data	Value	Unit
Storage and transport temperature	-10 ... +50	°C
Ambient temperature in operation (drive + motor):	-10 ... +45	°C

SST liquid end

Data	Value	Unit
Max. temperature long-term at max. operating pressure	90	°C
Max. temperature for 15 min at max. 2 bar	150	°C
Minimum temperature	-10	°C

14.5.2 Air humidity

Data	Value	Unit
Maximum air humidity *:	95	% rel. humidity

*non-condensing (according to DIN IEC 60068-2-30)

14.6 Motor data

Electrical data

For motor data - refer to the nameplate

Motor data sheets, special motors, special motor flanges, external fan, temperature monitoring

- *Motor data sheets for motor can be downloaded at www.prominent.com/en/downloads. If enclosed, refer to the "Supplementary CD for ProMinent Pump Operating Instructions" for the motor data sheet for the motor with identity code specification "S".*
- *For motors other than those with identity code specifications "S", "M" or "N". Pay special attention to the operating instructions for the motors.*

For motor data - refer to the nameplate

Motor data sheets, special motors, special motor flanges, external fan, temperature monitoring

- *For further information for the motor with identity code specification "S", refer to the motor data sheet in the Appendix. Motor data sheets can be requested for all other motors.*
- *For other motors "S", "M" or "N" as identity code specifications: Pay special attention to the operating instructions of the motors.*
- *Special motors or special motor flanges are possible on request.*

14.7 Housing degree of protection

Data	Value
Protection against contact and humidity*	IP 55

*according to DIN VDE 470 (EN IEC 60529)

14.8 Stroke sensor (optional), intrinsically safe

Stroke sensor (option), intrinsically safe

Install the sensor according to the chapter "Installation, electrical".

Namur sensor (Specified for EX zones)

5–25 V DC, in accordance with Namur or DIN 19234, potential-free design.

Data	Value	Unit
Rated voltage *	8	VDC
Power consumption - active surface uncovered	> 3	mA
Power consumption - active surface covered	< 1	mA
Rated switching distance	1.5	mm

* Ri ~ 1 kΩ

Cable colour	Polarity
blue	-
brown	+

14.9 Sound pressure level

Sound pressure level

Sound pressure level LpA < 70 dB in accordance with EN ISO 20361:2010-10

at maximum stroke length, maximum stroke rate, maximum back pressure (water)

14.10 Supplement for modified versions

(With Identcode specification "Version": "M" - "modified")

Technical data

Technical data of pumps in the modified version can deviate from those of the standard pumps. They can be queried by stating the details of the serial number.

motor

The motor data sheets for the modified version are valid. They may deviate from the standard motor data sheets.

Spare parts

With a modified version, it is absolutely necessary to specify the details of the serial number requesting and ordering the spare and replacement parts.

15 Meta MTKa dimensional drawing

- *Compare the dimensions on the dimension sheet and pump.*
- *All dimensions are in mm.*

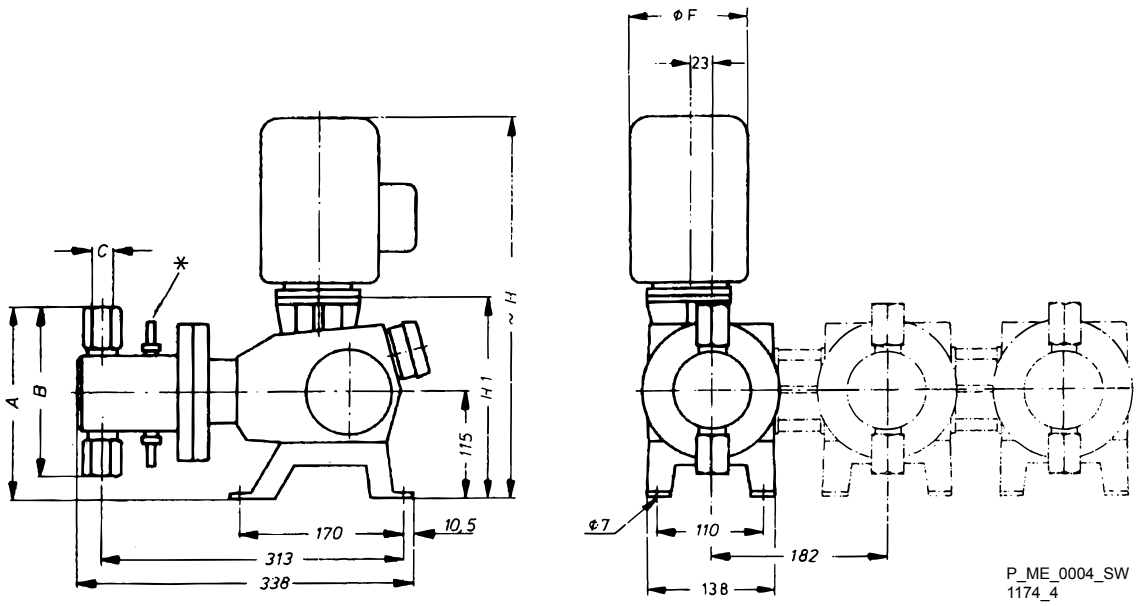

Tab. 3: Table of dimensions (all dimensions in mm)

Pump type	Liquid end	A	B	C
21606, 24006, 16208, 22508, 12910, 21610, 10812, 21012	FK 12.5	197.5	165	R 1/4"
10213, 11313, 07617, 10617, 06122, 10222, 05126, 09926	FK 25	197.5	165	R 1/4"
05425, 06025, 04033, 05633, 03241, 05441, 02749, 05249	FK 50	202.5	175	R 3/8"

	Standard motor	1-phase AC motor	Speed-controlled, externally-ventilated motors	Power end with flange
	Size 63; 0.18 kW B14 (V18) flange Ø 90	Size 71/0.37 kW Flange Ø 140 and 160	Flange Ø 140 0.37 kW / 0.75 kW	Flange 56 C/138
H	396	421	440 / 593	-
H1	231	422013	220	242

16 Diagrams for adjusting the capacity MTKa

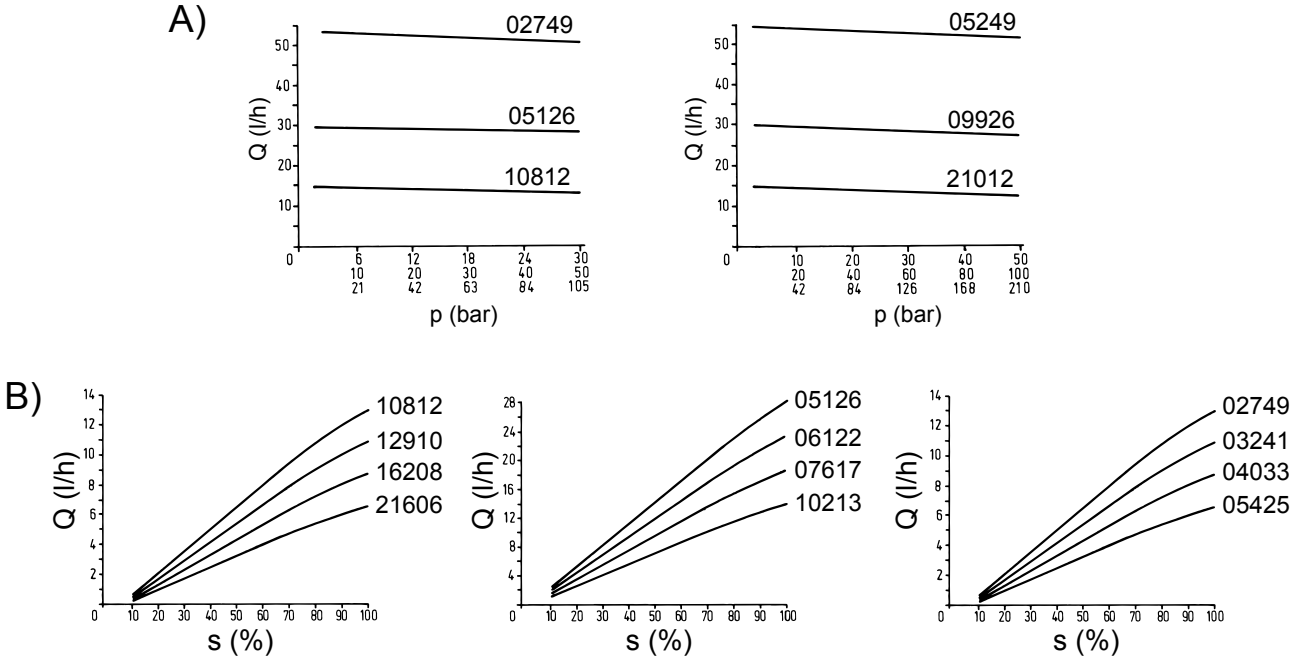

Fig. 16: A) Capacity Q depending on the back pressure p, B) Capacity Q with average back pressure depending on the stroke length s

The characteristic curves of other pump types are available on request.

17 Motor data sheets

Motor Datenblatt / Motor data sheet / Fiche technique pour moteur

Bestell Nr. **order no. / no. de commade**	**741218**	**Hersteller** **producer / producteur**	**ATB** **Mat.Nr. 306411**

Motor- Typ motor type type du moteur	AF63/4B-7	**Leistungsfaktor** power factor facteur de puissance	0,68 0,67	
Maschinenart type of machine désignation	3 Ph. Motor	**Wirkungsgrad** efficiency rendement	64% 64%	
Schutzart degree of protection degré de protection	IP55	**Bemessungsfrequenz** rated frequency fréquence nominale	50 Hz 60 Hz	
Bauform mounting construction	IMV18	**Bemessungsdrehzahl** rated speed vitesse nominale	1370 1680	U/min rpm t/mn
Bemessungsleistung rated output puissance nominale	0,180kW	**Wärmeklasse** temperature class class d'isolement	F	
Bemessungsspannung rated voltage tension nominale	⅄ / Δ 380-420/220-242V 380-460/220-265V	**Anzugsstrom** starting current courant de démarrage	3,4 3,7	fach fold fois
Bemessungsstrom rated current courant nominale	0,70 / 1,20A 0,64 / 1,10A	**Anzugsmoment** starting torque couple de démarrage	2,4 2,4	fach fold fois
Geprüft nach tested in acc. with contrôlé selon	EN 60034	**Kippmoment** pull-out torque couple de décrochage	2,4 2,4	fach fold fois
ATEX Nr.		**Umgebungstemperatur** ambient temperature température ambiante	40°C	
Ex-Schutzklasse ex-protective system		**Schaltung** connection branchement	⅄ / Δ	
		Drehzahlregelbereich speed ajustment range		

Anmerkung comments observation	* auf Anfrage beim Hersteller * upon request at manufacturer * sur demande auprès du producteur

ProMinent

Pumpentyp

Die Daten entsprechen den Angaben der Motorenhersteller. Kenndaten funktionsgleicher Motoren anderer Hersteller ändern sich nur unwesentlich. Angaben ohne Gewähr. The data correspond to the details given by the motor manufacturers. Ratings of motors with the same functions made by other producers show insignificant changes only. This information is supplied without liability. Les données techniques correspondent au descriptif du fabricant des moteurs. Les données techniques des moteurs similaires chez d' autres fabricants varient très peu. Données sont d' ordre général.

ProMinent Dosiertechnik GmbH . 69123 Heidelberg . Germany Nr./No. MD-741218 Datum/Date Sep 2010

18 Spare parts

The spare parts kit for the Meta (MTKa) piston metering pump

consists of:

1 - Ceramic metering piston

4 - Valve balls

4 - Ball seat discs

2 - Plunger packings made from PTFE/graphite

2 - Piston guide bands

14 - Flat seals

2 - O-rings

Spare parts kits

for liquid end	Pump types	Part no.
FK 12.5	21606, 24006, 16208, 22508, 12910, 21610, 10812, 21012	910470
FK 25	10213, 11313, 07617, 10617, 06122, 10222, 05126, 09926	910471
FK 50	05425, 06025, 04033, 05633, 03241, 05441, 02749, 05249	910472

19 EC Declaration of Conformity for Machinery

We,

- ProMinent Dosiertechnik GmbH
- Im Schuhmachergewann 5 - 11
- D - 69123 Heidelberg,

hereby declare that the product specified in the following complies with the relevant basic health and safety requirements of the EC Directive, on the basis of its functional concept and design and in the version distributed by us.

This declaration loses its validity in the event of a modification to the product not agreed with us.

Product Description:	Metering pump, Meta product range
Product type:	MTMa..., MTKa...
Serial number:	Please refer to nameplate on the device
Relevant EC directives:	EC Machinery Directive (2006/42/EC) EC EMC Directive (2004/108/EC) Compliance with the protection targets of the Low Voltage Directive (2006/95/EC) according to Appendix I, No. 1.5.1 of the Machinery Directive 2006/42/EC is maintained.
Harmonised standards applied, in particular:	EN ISO 12100 EN 809 EN 61010-1 EN 61000-6-2/4

Date: 20/09/2013

20 EC Declaration of Conformity for Machinery Used in Areas at Risk of Explosion

For pumps with explosion protection:

We,

- ProMinent Dosiertechnik GmbH
- Im Schuhmachergewann 5 - 11
- DE - 69123 Heidelberg,

hereby declare that the product specified in the following complies with the relevant basic health and safety requirements of the EC Directive, on the basis of its functional concept and design and in the version distributed by us.

This declaration loses its validity in the event of a modification to the product not agreed with us.

Product Description:	Metering pump, Meta product range, Version "Explosion protection" in accordance with "ATEX 95"
Product type:	MTMa, MTKa.., characteristic value "Electrical connection" = "P" or "L" and characteristic value of motor design = "1" or "2" or "Elec. connection" = "0, 1, 2, 3 or 4" and motor design = "A"
Serial number:	Please refer to nameplate on the device
Relevant EC directives:	EC Machinery Directive (98/37/EC) EC Low Voltage Directive (73/23/EEC) EC EMC Directive (89/336/EEC subs. by 92/31/EEC) EC Explosion Prevention Directive (94/9/EC)
Harmonised standards applied, in particular:	Pump without motor: EN ISO 12100-1/2, EN 809, EN 13463-1/5 Motor Ex "e": EN 50014, EN 50019 Motor Ex "d": EN 60079-0, EN 60079-1, EN 60079-7, EN 61241-0, EN 61241-1 Stroke sensor: EN 60079-0, EN 60079-11, EN 60079-26
Applied national standards and other technical specifications in particular:	DIN 44081 (Thermal protection of explosion-proof "d" motors)

Date: 11/07/2003

ProMinent GmbH
Im Schuhmachergewann 5-11
69123 Heidelberg
Germany
Telephone: +49 6221 842-0
Fax: +49 6221 842-419
Email: info@prominent.com
Internet: www.prominent.com

985037, 2, en_GB

© 2022