POWERMATIC®

Operating Instructions and Parts Manual
Woodturning Lathe
Model 3520B

Powermatic
427 New Sanford Road
LaVergne, Tennessee 37086
Ph.: 800-274-6848
www.powermatic.com

Part No. M-1352001
Revision D 10/2014
Copyright © 2014 Powermatic

Warranty and Service

Powermatic warrants every product it sells against manufacturers' defects. If one of our tools needs service or repair, please contact Technical Service by calling 1-800-274-6846, 8AM to 5PM CST, Monday through Friday.

Warranty Period
The general warranty lasts for the time period specified in the literature included with your product or on the official Powermatic branded website.

- Powermatic products carry a limited warranty which varies in duration based upon the product. (See chart below)
- Accessories carry a limited warranty of one year from the date of receipt.
- Consumable items are defined as expendable parts or accessories expected to become inoperable within a reasonable amount of use and are covered by a 90 day limited warranty against manufacturer's defects.

Who is Covered
This warranty covers only the initial purchaser of the product from the date of delivery.

What is Covered
This warranty covers any defects in workmanship or materials subject to the limitations stated below. This warranty does not cover failures due directly or indirectly to misuse, abuse, negligence or accidents, normal wear-and-tear, improper repair, alterations or lack of maintenance. Powermatic woodworking machinery is designed to be used with Wood. Use of these machines in the processing of metal, plastics, or other materials may void the warranty. The exceptions are acrylics and other natural items that are made specifically for wood turning.

Warranty Limitations
Woodworking products with a Five Year Warranty that are used for commercial or industrial purposes default to a Two Year Warranty. Please contact Technical Service at 1-800-274-6846 for further clarification.

How to Get Technical Support
Please contact Technical Service by calling 1-800-274-6846. **Please note that you will be asked to provide proof of initial purchase when calling.** If a product requires further inspection, the Technical Service representative will explain and assist with any additional action needed. Powermatic has Authorized Service Centers located throughout the United States. For the name of an Authorized Service Center in your area call 1-800-274-6846 or use the Service Center Locator on the Powermatic website.

More Information
Powermatic is constantly adding new products. For complete, up-to-date product information, check with your local distributor or visit the Powermatic website.

How State Law Applies
This warranty gives you specific legal rights, subject to applicable state law.

Limitations on This Warranty
POWERMATIC LIMITS ALL IMPLIED WARRANTIES TO THE PERIOD OF THE LIMITED WARRANTY FOR EACH PRODUCT. EXCEPT AS STATED HEREIN, ANY IMPLIED WARRANTIES OF MERCHANTABILITY AND FITNESS FOR A PARTICULAR PURPOSE ARE EXCLUDED. SOME STATES DO NOT ALLOW LIMITATIONS ON HOW LONG AN IMPLIED WARRANTY LASTS, SO THE ABOVE LIMITATION MAY NOT APPLY TO YOU.

POWERMATIC SHALL IN NO EVENT BE LIABLE FOR DEATH, INJURIES TO PERSONS OR PROPERTY, OR FOR INCIDENTAL, CONTINGENT, SPECIAL, OR CONSEQUENTIAL DAMAGES ARISING FROM THE USE OF OUR PRODUCTS. SOME STATES DO NOT ALLOW THE EXCLUSION OR LIMITATION OF INCIDENTAL OR CONSEQUENTIAL DAMAGES, SO THE ABOVE LIMITATION OR EXCLUSION MAY NOT APPLY TO YOU.

Powermatic sells through distributors only. The specifications listed in Powermatic printed materials and on the official Powermatic website are given as general information and are not binding. Powermatic reserves the right to effect at any time, without prior notice, those alterations to parts, fittings, and accessory equipment which they may deem necessary for any reason whatsoever.

Product Listing with Warranty Period

90 Days – Parts; Consumable items
1 Year – Woodworking Machinery used for industrial or commercial purposes
5 Year – Woodworking Machinery

NOTE: Powermatic is a division of JPW Industries, Inc. References in this document to Powermatic also apply to JPW Industries, Inc., or any of its successors in interest to the Powermatic brand.

Table of Contents

Warranty and Service 2
Table of Contents 3
Warning 4
Introduction 5
Specifications 6
Unpacking 7
  Contents of the Shipping Container 7
Assembly 8
  Comparator Rear Bracket 9
  Tool Caddy 9
  Guard 9
  Bed Extension (Optional Accessory) 10
  Shelf Assemblies (Optional) 11
Grounding Instructions 12
  Single Phase Operation 13
  Three Phase Operation 13
  Extension cords 13
Adjustments 13
  Headstock and Tailstock Movement 13
  Cam Tightness 14
  Tool Support 14
  Locking Handles 14
  Live Center and Cone 15
  Indexer 15
  Centers – Installing and Removing 15
  Face Plate – Installing and Removing 16
  Comparator – Installing and Using 16
  Speed Change 17
  Sheave and Belt Alignment 18
  Checking Spindle Play 18
  Sheave/Drive Belt Replacement 18
Operating Controls 19
Operation 20
  Turning Tools 21
  Spindle Turning 22
  Cutting Techniques 23
  Face Plate and Bowl Turning 25
  Bowl Turning Techniques 26
Maintenance 27
Indexer Positions 28
Troubleshooting 29
Recommended Lathe Speeds (per diameter of workpiece) 30
Replacement Parts 30
  Headstock Assembly 31
  Parts List: Headstock Assembly 32
  Stand and Bed Assembly 34
  Parts List: Stand and Bed Assembly 35
  Optional Accessories: Bed Extensions 36
  Optional Accessories: Outboard Turning Stand 37
  Optional Accessories: Face Plates, Tool Supports and Misc. 38
Electrical Connections 39
Electrical: Remote ON/OFF Switch (Optional Accessory) 40

Warnings

1. Read and understand the entire owner's manual before attempting assembly or operation.
2. Read and understand the warnings posted on the machine and in this manual. Failure to comply with all of these warnings may cause serious injury.
3. Replace the warning labels if they become obscured or removed.
4. This Lathe is designed and intended for use by properly trained and experienced personnel only. If you are not familiar with the proper and safe operation of a Lathe, do not use until proper training and knowledge have been obtained.
5. Do not use this Lathe for other than its intended use. If used for other purposes, Powermatic disclaims any real or implied warranty and holds itself harmless from any injury that may result from that use.
6. Always wear approved safety glasses/face shields while using this machine. Everyday eyeglasses only have impact resistant lenses; they are not safety glasses.
7. Before operating this Lathe, remove tie, rings, watches and other jewelry, and roll sleeves up past the elbows. Remove all loose clothing and confine long hair. Non-slip footwear or anti-skid floor strips are recommended. Do **not** wear gloves.
8. Wear ear protectors (plugs or muffs) during extended periods of operation.
9. Some dust created by power sanding, sawing, grinding, drilling and other construction activities contain chemicals known to cause cancer, birth defects or other reproductive harm. Some examples of these chemicals are:

   - Lead from lead based paint.
   - Crystalline silica from bricks, cement and other masonry products.
   - Arsenic and chromium from chemically treated lumber.

   Your risk of exposure varies, depending on how often you do this type of work. To reduce your exposure to these chemicals, work in a well-ventilated area and work with approved safety equipment, such as face or dust masks that are specifically designed to filter out microscopic particles.
10. Do not operate this machine while tired or under the influence of drugs, alcohol or any medication.
11. Do not expose this machine to rain, or operate machine in damp locations.
12. Make certain the switch is in the **OFF** position before connecting the machine to the power supply.
13. Make certain the machine is properly grounded.
14. Make all machine adjustments or maintenance with the machine unplugged from the power source.
15. Remove adjusting keys and wrenches. Form a habit of checking to see that keys and adjusting wrenches are removed from the machine before turning it on.
16. Keep the safety guard in place at all times when the machine is in use. If removed for maintenance purposes or for turning procedures which do not permit its use, exercise extreme caution and replace the guard immediately after the operation is complete.
17. Check damaged parts. Before further use of the machine, a guard or other part that is damaged should be carefully checked to determine that it will operate properly and perform its intended function. Check for alignment of moving parts, binding of moving parts, breakage of parts, mounting and any other conditions that may affect its operation. A guard or other part that is damaged should be properly repaired or replaced.
18. Provide for adequate space surrounding work area and non-glare, overhead lighting.
19. Keep the floor around the machine clean and free of scrap material, oil and grease.
20. Keep visitors a safe distance from the work area. **Keep children away.**
21. Make your workshop child proof with padlocks, master switches or by removing starter keys.

Warnings

22. Give your work undivided attention. Looking around, carrying on a conversation and “horse-play” are careless acts that can result in serious injury.
23. Maintain a balanced stance at all times so that you do not fall or lean against the centers, workpiece or other moving parts. Do not overreach or use excessive force to perform any machine operation.
24. Use the right tool at the correct speed and feed rate. Do not force a tool or attachment to do a job for which it was not designed. The right tool will do the job better and safer.
25. Use recommended accessories; improper accessories may be hazardous.
26. Keep turning tools sharp and clean for the best and safest performance, and position the tools properly in relation to the workpiece.
27. Turn off the machine before cleaning. Use a brush or compressed air to remove chips or debris — do not use your hands.
28. Do not stand on the machine. Serious injury could occur if the machine tips over.
29. Never leave the Lathe running unattended. Turn the power off and do not leave the machine until it comes to a complete stop.
30. Remove loose items and unnecessary work pieces from the area before starting the machine.
31. Check the workpiece carefully for splits, knots or other obstructions which may cause a safety risk while turning.
32. Adjust the tool support to the proper height and position for the work. Rotate the workpiece by hand to check clearance with the tool support.
33. Select the appropriate speed for the turning job at hand. Start at low speed and allow the Lathe to ramp up to operating speed.
34. Never stop a rotating workpiece with your hand.
35. If gluing up a workpiece, always use a high-quality glue of the type necessary for that particular workpiece.

Familiarize yourself with the following safety notices used in this manual:

⚠CAUTION This means that if precautions are not heeded, it may result in minor injury and/or possible machine damage.

⚠WARNING This means that if precautions are not heeded, it may result in serious injury or possibly even death.

- - SAVE THESE INSTRUCTIONS - -

Introduction

This manual is provided by Powermatic covering the safe operation and maintenance procedures for a Model 3520B Lathe. This manual contains instructions on installation, safety precautions, general operating procedures, maintenance instructions and parts breakdown. This machine has been designed and constructed to provide consistent, long-term operation if used in accordance with instructions set forth in this manual. If there are any questions or comments, please contact either your local supplier or Powermatic. Powermatic can also be reached at our web site: www.powermatic.com.

Specifications

Model Number 3520B
Stock Number 1352001

Capacities:
Working distance between centers ..... 34-1/2”
Working distance between centers, 18” bed extension mounted ..... 48”
Maximum distance between spindle face and tailstock quill ..... 36”
Swing over bed ..... 20”
Swing over toolrest base ..... 17”
Maximum diameter outboard turning ..... 38”

Motor and Electricals:
Motor type ..... totally enclosed fan cooled, induction
Horsepower ..... 2HP (1.5 kW)
Voltage ..... 220 V
Cycle 60Hz
Motor FLA (full load amperage) 6.2
Power requirements ..... 220V, 3Ph or 1Ph
Drive system ..... Poly V belt, inverter drive
VFD input amperage 15.7A (1PH), 8.4A (3PH)
VFD output to motor 7.5A (3PH)
Recommended circuit* ..... 20 A

* *subject to local and national electrical codes*

Headstock and Spindle:
Spindle speeds (RPM) ..... high 125-3200; low 50-1200
Spindle thread size ..... 1-1/4” x 8 TPI
Spindle direction ..... forward/reverse
Headstock spindle taper ..... #2 Morse
Hole through headstock spindle, diameter ..... 5/8”
Outboard external threads ..... 1-3/16”–18 UNC
Indexing positions 48

Tailstock:
Tailstock quill taper ..... #2 Morse
Hole through tailstock spindle, diameter ..... 3/8”
Tailstock quill travel ..... 4-1/2” (114 mm)

Measurements:
Maximum overall length ..... 77-1/4” (1854 mm)
Overall height to top of headstock ..... 49-1/2” (1257 mm)
Distance from floor to centerline of spindle ..... 44” (1118 mm) adjustable
Footprint of stand ..... 50”L x 24”W (1270 x 610 mm)
Tool support post diameter ..... 1” (25.4mm)

Materials:
Headstock body ..... cast iron
Bed ..... cast iron
Legs ..... cast iron
Tool rest and base ..... cast iron
Comparator brackets ..... cast iron

Weights:
Net ..... 630 lb (286 kg)
Shipping ..... 682 lb (309 kg)

The above specifications were current at the time this manual was published, but because of our policy of continuous improvement, Powermatic reserves the right to change specifications at any time and without prior notice, without incurring obligations.

Unpacking

Open shipping container and check for shipping damage. Report any damage immediately to your distributor and shipping agent. Do not discard any shipping material until the Lathe is assembled and running properly.

Compare the contents of your container with the following parts list to make sure all parts are intact. Some parts can be found in separate boxes packed around the Lathe. Missing parts, if any, should be reported to your distributor. Read the instruction manual thoroughly for assembly, maintenance and safety instructions.

Contents of the Shipping Container

1 Lathe Bed, with Headstock, Tailstock, & Tool Support Base – (A)
2 Leg Assemblies – (B)
1 Guard – (C)
1 Tool Support, 14" – (D)
1 Face Plate, 3" – (E)
1 Live Center – (F)
1 Spur Center, 1" – (G)
1 Index Pin – (H)
1 Live Center Pin – (J)
1 Knockout Rod – (K)
1 Face Plate Wrench – (L)
1 Tool Caddy – (M)
4 Levelers – (N)
12 Socket Hd. Cap Screws, 3/8" x 1-1/4" – (O)
12 Lock Washers, 3/8" – (P)
10 Flat Washers, 3/8" – (R)
2 Comparator Centers – (S)
1 Comparator Rear Bracket with Lock Handle – (T)
1 Owner's Manual
1 Warranty Card

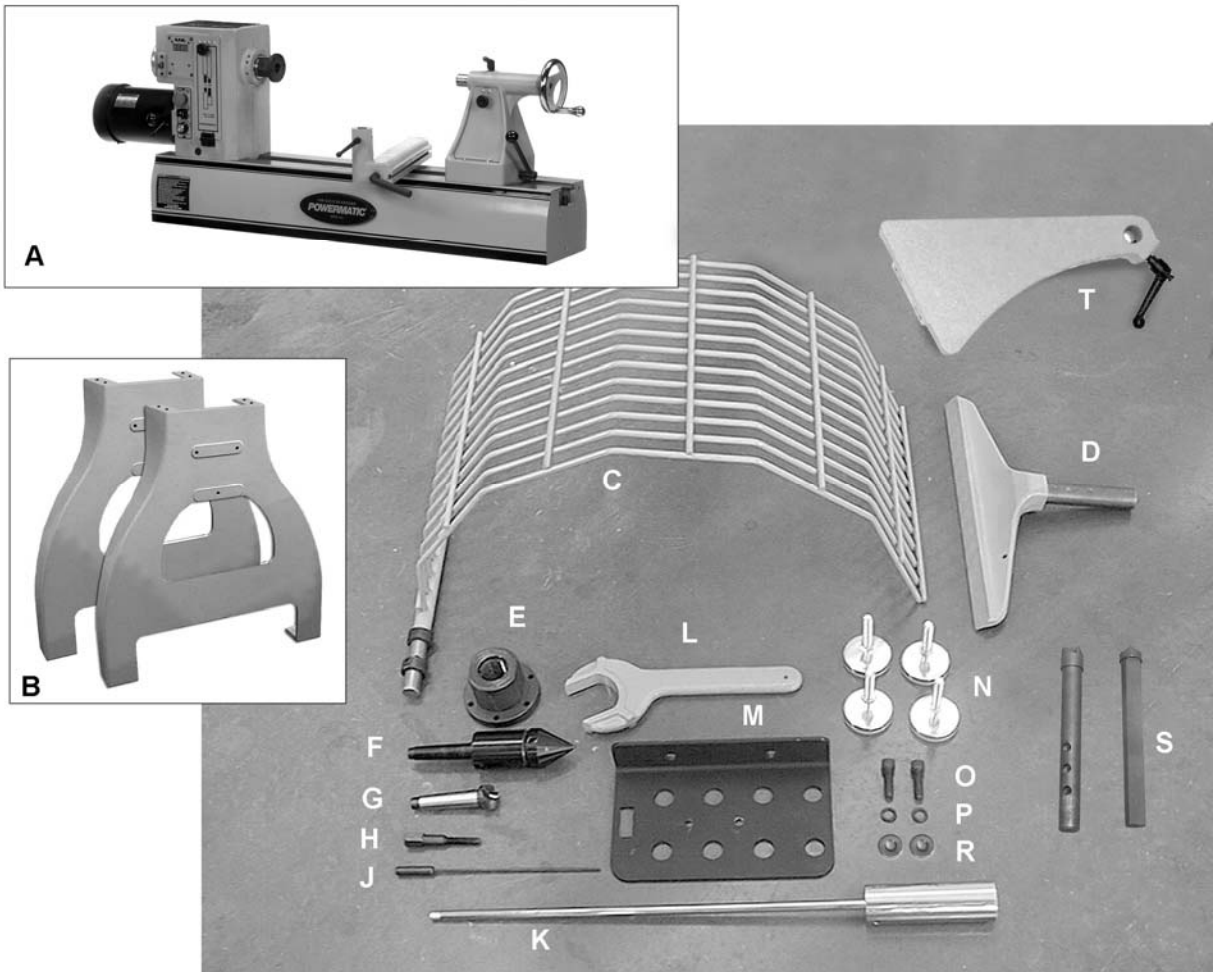

⚠WARNING **Read and understand the entire contents of this manual before attempting set-up or operation! Failure to comply may cause serious injury.**

Assembly

Tools required for assembly

14mm wrench
4mm and 8mm hex wrenches

⚠WARNING The Lathe should be disconnected from power during assembly.

1. Remove any screws or straps that hold the Lathe parts to the pallet, and remove protective wrapping. Set all the boxes containing legs and accessories to the side.
2. Before assembling the legs, decrease the weight on the Lathe bed: Remove the stop bolt at each end of the bed, and slide off the headstock, tailstock and tool support base *(Refer to "Headstock and Tailstock Movement" on pages 13-14 for any clarification on removing these).*

⚠CAUTION The headstock is heavy; use caution when removing it from the lathe bed.

3. Turn the lathe bed upside down on the shipping pallet (make sure there is nothing beneath that would scratch the bed ways).
4. Install the legs to the bed using eight socket head cap screws with eight lock washers and eight flat washers (Figure 1). Tighten the screws firmly with an 8mm hex wrench.
5. Screw the levelers into the threaded holes of the legs (Figure 1). Tighten the hex nuts against the bottom of the legs with a 14mm wrench. The levelers can be adjusted at any time to ensure the Lathe is stable and level.
6. Use an assistant to help stand the Lathe right side up on its legs.
7. The Lathe should be located in a dry area, on a sturdy floor, and with sufficient lighting. Leave plenty of space around the machine for operations and routine maintenance work.
8. Exposed metal areas of the Lathe, such as the bed and spindles, have been factory coated with a protectant. This should be removed with a soft cloth and a cleaner-degreaser. Clean the bed areas under the headstock, tailstock and tool support base. Do not use an abrasive pad, and do not allow solvents to contact painted or plastic areas.
9. Re-install headstock, tool support base, tailstock and stop bolts.

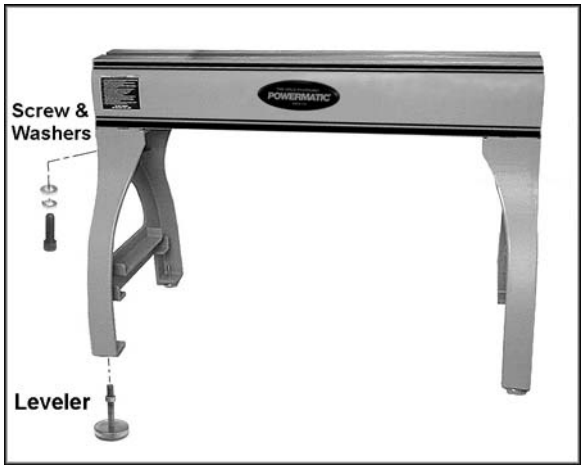

Figure 1

Comparator Rear Bracket

Mount the comparator rear bracket (A, Figure 2) to the back of the tailstock with two 3/8 x 1-1/4 socket head cap screws, two 3/8 lock washers and two 3/8 flat washers (B, Figure 2). The bracket has a slot so it can be aligned with the bracket on the headstock. (See “Comparator – Installing and Using” for further information.)

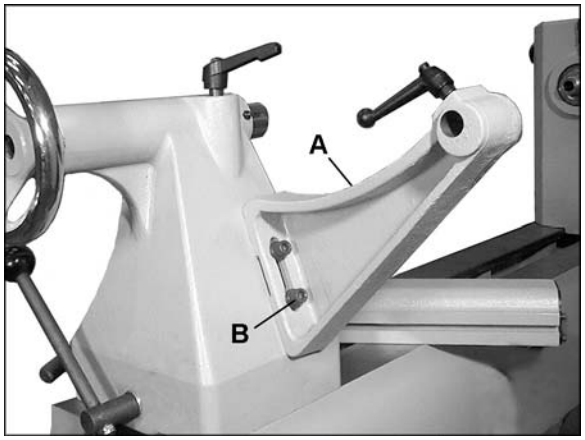

Figure 2

Tool Caddy

The tool caddy, shown in Figure 3, can be mounted to the left end or right end of the Lathe. The left end, near the headstock area, is generally preferred for convenience. Use two socket head cap screws and two lock washers with an 8mm hex wrench to secure the tool caddy to the threaded holes in the Lathe.

The tool caddy has holes for placing the knockout rod, spur center, live center, live center pin, comparator centers, and faceplate wrench.

Accessories can also be stored in the tailstock, as shown in Figure 4.

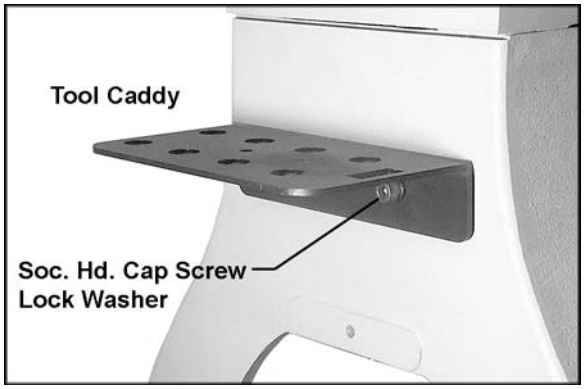

Figure 3

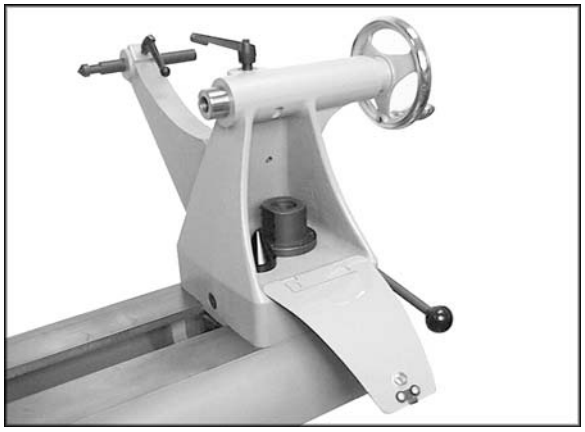

Figure 4

Guard

WARNING **The guard must always be used in operations that will allow its use.**

1. On the guard, loosen the set screw on the outer collar (shown in Figure 5) with a 4mm hex wrench. Slide the outer collar off the guard support rod.
2. Insert the guard support rod into the mounting bracket at the rear of the headstock, as shown in Figure 5. You will have to lift up on the spring pin, as shown, to slide the guard support rod into the mounting bracket. Release the spring pin and it will snap into position as you slide the support rod farther in.
3. Install the outer collar and tighten the set screw.

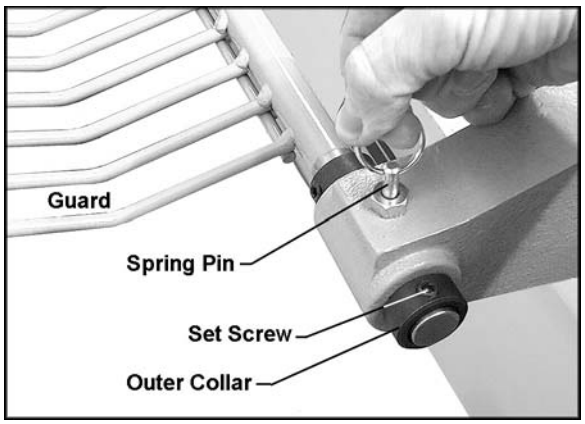

Figure 5

4. The guard can be pivoted to one of two positions: Operating mode (shown on front cover) or tilted back for stock loading (shown in Figure 6).

5. Pull up on the spring pin, and begin tilting the guard, then release the spring pin. When the guard reaches either of the two positions, the spring pin will engage.

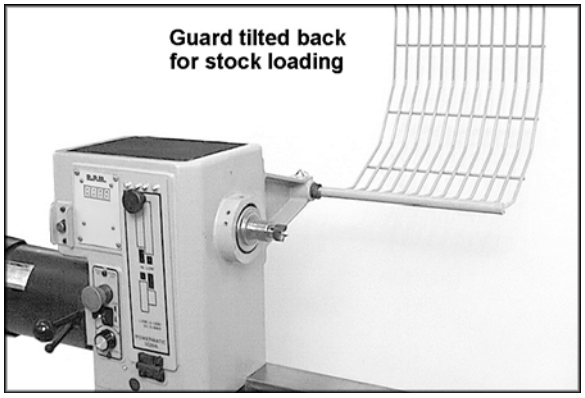

Figure 6

Bed Extension (Optional Accessory)

An optional 18" bed extension assembly, stock number 6294727B, is available for the Lathe (see your Powermatic dealer). To mount the bed extension to the Lathe:

1. Slide the tailstock away from the edge of the bed.

2. Have an assistant hold the bed extension flush to the end of the Lathe bed, and insert three 3/8 x 1-3/4 socket head cap screws, three 3/8 lock washers and three 3/8 flat washers, through the holes in the bed extension into the threaded holes on the Lathe. See Figure 7.

3. Shift the bed extension upward so that it is slightly higher than the Lathe bed. Tighten the screws with an 8mm hex wrench just enough to hold the bed extension to the Lathe bed.

   IMPORTANT: The surface of the bed extension **must** be leveled with the surface of the Lathe bed to allow smooth movement of the tailstock across the seam.

4. Use a dead blow mallet, or a hammer with a block of wood, to tap down the bed extension until it is flush with the Lathe bed. See Figure 8. **Never use a steel-faced hammer directly against the bed surfaces**. Tap the bed extension where needed until its surface is aligned with the Lathe bed, and the inside ways are aligned.

5. Firmly tighten the three socket head cap screws. Make sure your alignment of the bed surfaces doesn't shift while tightening the screws.

6. Unscrew the stop bolt from the Lathe bed (Figure 7), and screw it into the hole at the end of the bed extension.

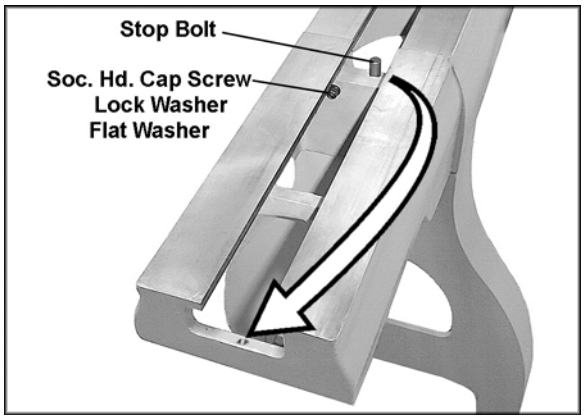

Figure 7
(optional 18" bed extension shown)

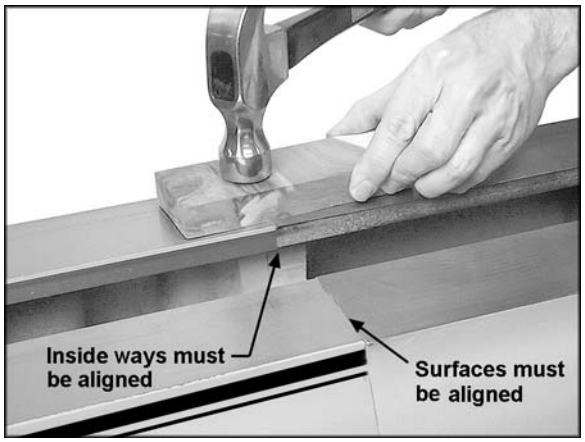

Figure 8

For outboard turning, where the headstock is moved to the opposite end of the Lathe to accommodate large bowl blanks, you can (1) mount the 18” bed extension to the three lower holes on the Lathe frame, and (2) mount a vertical extension post [included with the optional bed extension] to the tool rest base. See Figure 9.

For large outboard work, an outboard turning stand (# 6294732) is available – see page 37.

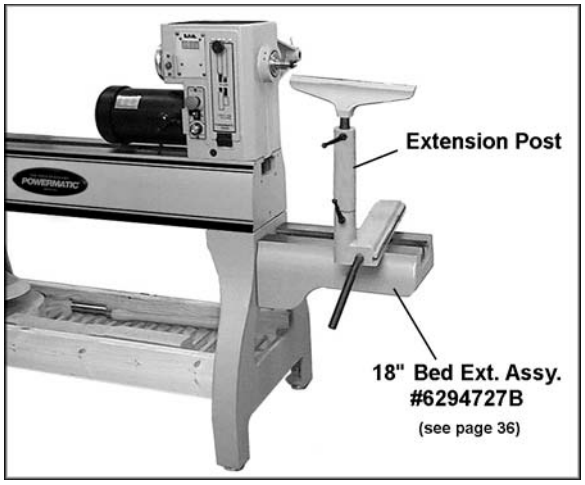

Figure 9
(shown with optional accessories)

Shelf Assemblies (Optional)

The double ledges on the inside of the Lathe legs will provide support for a shelf (not provided), which is convenient for storing larger items while keeping them easily accessible.

Figures 10-11-12 illustrate three methods of creating a shelf, using common lumber and basic tools.

IMPORTANT TIP: It is unlikely that a full-size shelf can be completely built and then inserted between the Lathe legs. Therefore, construct the shelf in pieces and insert screws only *after* the shelf has been established beneath the Lathe.

Shelf Style 1 (Figure 10)

Lay two 2x6 boards flat upon the inner ledges. Boards of 48” length are suitable, although 48-1/2” is optimal.

Figure 10

Shelf Style 2 (Figure 11)

Lay two 2x4’s (or 2x6’s) on edge into the outer ledges. Boards of 48” length are suitable, 48-1/2” optimal.

Cut two pieces from a plywood board, and screw them to the top edges of the 2x4’s. (One 48” plywood piece will not fit through the legs of the Lathe; use at least two pieces.) Make the plywood pieces flush with the outside edge of the 2x4’s.

Figure 11

Shelf Style 3: (Figure 12)

This is a basket-style shelf consisting of two 2x6’s and dowel rods. The advantage of this design is that most wood chips will fall through the shelf instead of accumulating on it. The instructions below are for building the shelf shown in Figure 12.

Materials used:

2 – 2x6’s (48” suitable, 48-1/2” optimal).

8 – wood dowels, 4’ length, 5/8” diameter.

1. Mark your hole centers (2” centers) along the length of a 2x6. Place the holes so that the tops of the dowels will be even with the tops of the ledges on the Lathe. Also, adjust your hole centers as necessary so that the first and last dowel will begin at approximately the same distance from the ledge at both ends of the Lathe.
2. Use a 5/8” spade bit chucked in a drill press or in a portable drill. Bore the holes *through* one 2x6; this will be the rear piece.
3. On the other 2x6, do not bore through but only deep enough to securely hold the ends of the dowel rods. This will be the front piece and will provide a pleasing appearance at the front of your Lathe.
4. When all holes have been bored, place the 2x6’s on edge in the outer ledges of the Lathe.
5. Cut the dowel rods to length with a miter saw or hand saw, so that after insertion the rods will be flush with the back of the rear 2x6.
6. Insert the dowel rods through the holes in the rear 2x6, as shown in Figure 12.
7. A strip of wood can be screwed to the rear 2x6 to cover the dowel holes and prevent the dowels from working out.

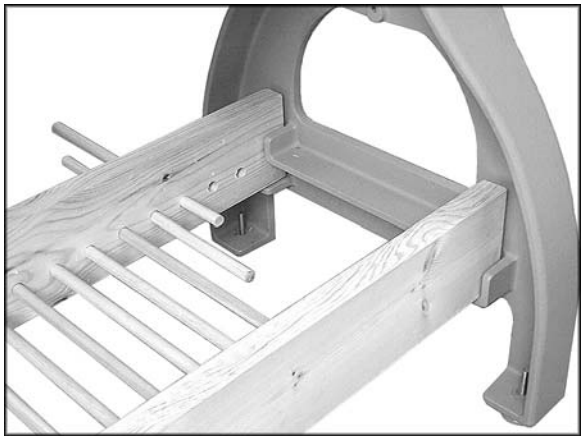

Figure 12

Grounding Instructions

WARNING Electrical connections must be made by a qualified electrician in compliance with all relevant codes. This machine must be properly grounded to help prevent electrical shock and possible fatal injury.

This machine must be grounded. In the event of a malfunction or breakdown, grounding provides a path of least resistance for electric current to reduce the risk of electric shock.

Improper connection of the equipment-grounding conductor can result in a risk of electric shock. The conductor, with insulation having an outer surface that is green with or without yellow stripes, is the equipment-grounding conductor. If repair or replacement of the electric cord or plug is necessary, do not connect the equipment-grounding conductor to a live terminal.

Check with a qualified electrician or service personnel if the grounding instructions are not completely understood, or if in doubt as to whether the tool is properly grounded.

Repair or replace a damaged or worn cord immediately.

The Lathe will operate on single phase or three phase, 230 volt power supply. Make sure the characteristics of your power supply match the specifications on the motor plate of the Lathe. It is recommended that the lathe be connected to a 20 Amp circuit with circuit breaker or time delay fuse. **Local codes take precedence over recommendations.**

Single Phase Operation

A three wire pigtail for use on 230 volt single phase power is attached to the inverter and may be “hard-wired” to the power source, or connected to a UL/CSA listed receptacle plug.

Connect the 230 volt supply to the black and white leads and ground the green lead.

If you are hard-wiring the Lathe to a panel, make sure a disconnect is available for the operator. During hard-wiring of the Lathe, make sure the fuses have been removed or the breakers have been tripped in the circuit to which the Lathe will be connected. Place a warning placard on the fuse holder or circuit breaker to prevent it being turned on while the machine is being wired.

Three Phase Operation

If three phase power is used, it will be necessary to replace the pigtail wire attached to the inverter with a 12/4 wire and connect the three hot leads to the inverter at R, S, T as shown in the wiring diagram on page 39. Always connect the ground lead.

Extension cords

If an extension cord is necessary, make sure the cord rating is suitable for the amperage listed on the machine’s motor plate. An undersized cord will cause a drop in line voltage resulting in loss of power and overheating.

Use the chart in Figure 13 as a general guide in choosing the correct size cord. If in doubt, use the next heavier gauge. The smaller the gauge number, the heavier the cord.

Adjustments

Headstock and Tailstock Movement

To slide the headstock or tailstock, swing the locking handle (A, Figure 14) backward or forward until the headstock/tailstock can slide freely.

Recommended Gauges (AWG) of Extension Cords

	Extension Cord Length *					
Amps	25 feet	50 feet	75 feet	100 feet	150 feet	200 feet
< 5	16	16	16	14	12	12
5 to 8	16	16	14	12	10	NR
8 to 12	14	14	12	10	NR	NR
12 to 15	12	12	10	10	NR	NR
15 to 20	10	10	10	NR	NR	NR
21 to 30	10	NR	NR	NR	NR	NR

*based on limiting the line voltage drop to 5V at 150% of the rated amperes.
NR: Not Recommended.

Figure 13

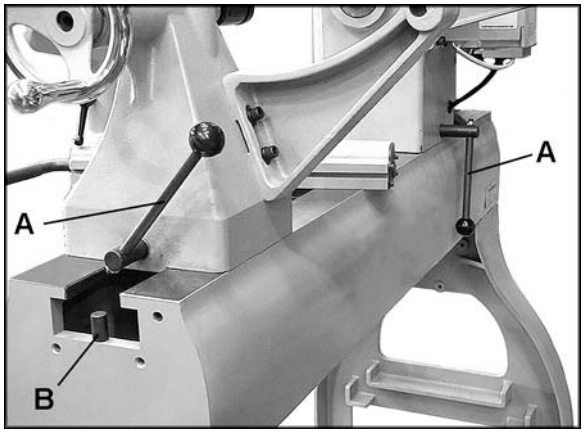

Figure 14

When the headstock/tailstock is positioned, rotate the locking handle to tighten it securely.

To remove headstock, tailstock or toolrest base from the bed, unscrew and remove either of the stop bolts (B, Figure 14). After re-mounting these items on the Lathe, re-insert the stop bolt.

For most turning operations, except outboard turning, the headstock should be positioned at the left end of the bed, and only the tailstock moved to accomodate the workpiece.

Cam Tightness

If the headstock, tailstock or tool rest base does not tighten properly down against the Lathe bed when the locking handle is tightened, it may need adjusting. Figure 15 uses the tailstock as the example:

1. Unscrew and remove the stop bolt on the end of the lathe bed (B, Figure 14) and slide the tailstock off the end of the bed.
2. Turn the tailstock on its side, and tighten the lock nut with a wrench. See Figure 15.
3. Mount tailstock on bed and insert the stop bolt.

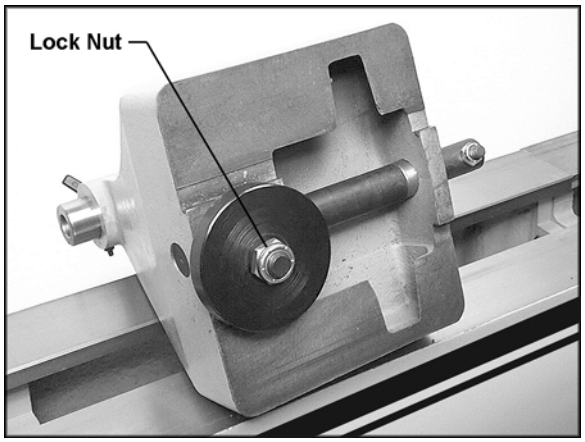

Figure 15

Tool Support

A 14” tool support is provided with your Lathe. It is designed to allow adjustment for height, position on the bed, and angle to the work.

Loosen the locking handle on the tool support base (C, Figure 16) to slide the support base forward or back, and to angle it to the bed. Tighten the locking handle firmly before operating the Lathe.

Loosen the small handle (D, Figure 16) to raise or lower the tool support and angle it to the work. Tighten the handle before operating the Lathe.

The small handle (D, Figure 16) can be inserted into one of three holes on the tool support base. The position shown in Figure 16 is preferred so that the locking handle contacts the groove in the tool rest shaft.

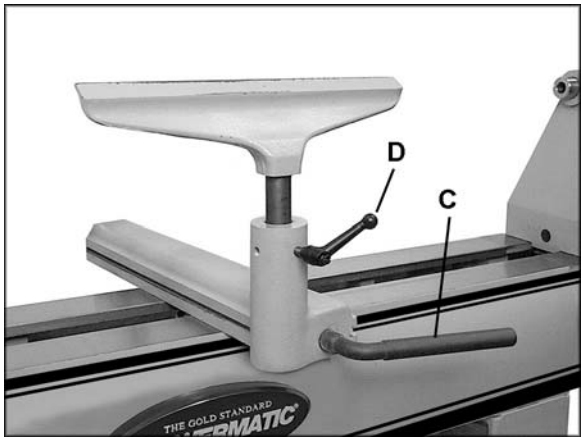

Figure 16

Locking Handles

Each small locking handle such as D, Figure 16 can be rotated to a more convenient position. Simply lift up on the handle, rotate it on the pin, then release it, making sure it seats itself on the pin.

Live Center and Cone

The live center cone, shown in Figure 17, screws clockwise onto the threads of the live center body.

To remove the cone from the live center, first insert the live center pin through the hole in the live center body as shown in Figure 17. If the pin will not insert at first, rotate the cone until the pin can be inserted. The cone can now be removed by holding the body stationary while unscrewing the cone.

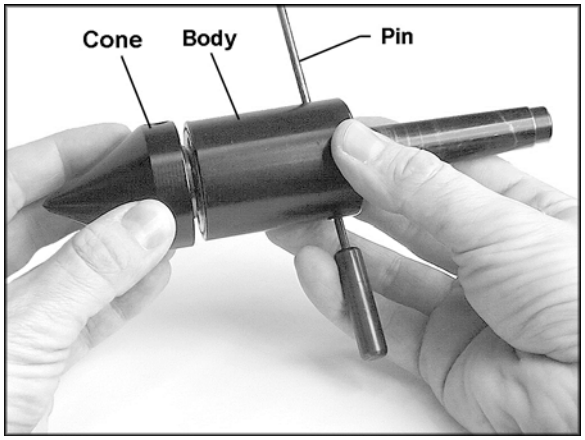

Figure 17

Indexer

The indexer allows you to cut evenly spaced features in a workpiece while keeping the Lathe headstock spindle locked; for example, when cutting flutes on a spindle blank with a router, while the spindle blank is secured within the Lathe centers.

There are 12 holes in the spindle collar spaced 30° apart, and 4 holes in the headstock casting which accept the index pin (see Figures 18 and 19). The combination of holes will allow you to mark your workpiece for evenly spaced features.

1. To use the indexer, thread the index pin (Figure 18) into one of the four holes until the index pin engages the spindle and prevents it from turning. This will be your first indexing position.
2. Unscrew and remove the index pin, and look down the hole, carefully counting the number of holes as you rotate the spindle using the handwheel. Continue to rotate the spindle until you reach the hole needed for your second flute cutting, then re-insert the index pin.
3. Refer to the more detailed instructions and chart on page 28 to determine in which holes to place the index pin relative to the number of flutes desired in your workpiece.

NOTE: Remove index pin before turning on the Lathe.

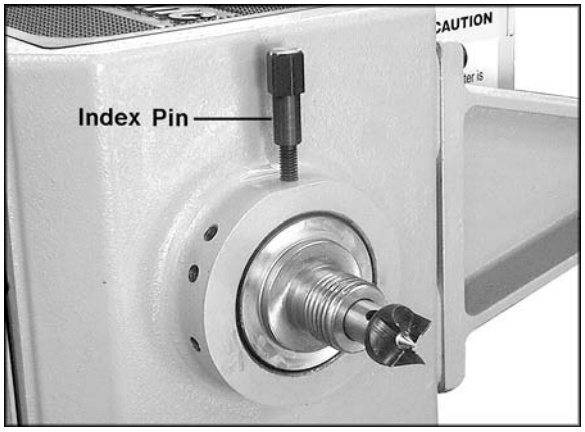

Figure 18

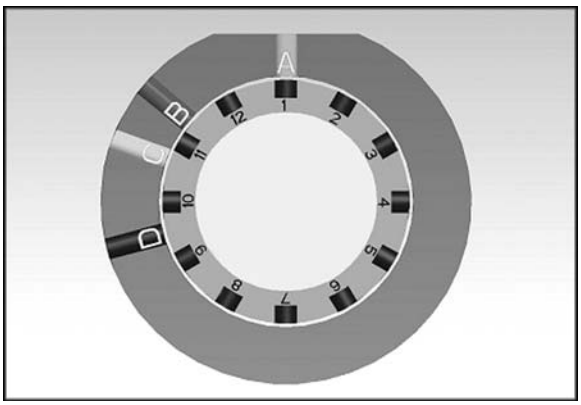

Figure 19

Centers – Installing and Removing

1. Disconnect Lathe from power source.
2. To *install* a spur center or live center (the spur center should first be mounted to your workpiece; see under “Operation” for more details), clean the tapered end of the center and the inside of the headstock taper spindle, then push the center into the headstock spindle.

3. To *remove* a spur center or live center, first remove the workpiece from the Lathe. Insert the knockout rod (Figure 20) through the hole in the handwheel and firmly tap the tapered end of the spur center. The sliding collar on the knockout rod helps give the necessary impact without having to use a mallet against the end of the rod.

IMPORTANT: Hold the center by either placing your thumb and forefinger on the outside diameter of the spur center, or wrapping the center with a rag. The center can be damaged if allowed to fall.

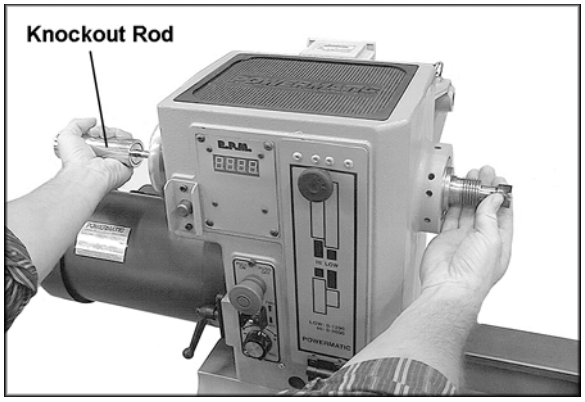

Figure 20

Face Plate – Installing and Removing

1. Disconnect Lathe from power source.
2. Mount the face plate to your bowl blank.
3. Push in the spindle lock button (Figure 21) and rotate the handwheel slightly until the spindle locks. Keep the spindle lock button pushed in.
4. Install the face plate onto the threads of the headstock spindle and rotate clockwise hand-tight. When the Lathe is turned on (forward rotation), the rotational force will snug the face plate even further onto the threads.

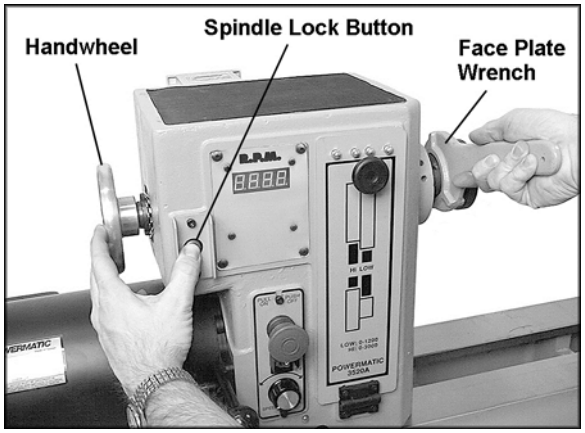

Figure 21

WARNING **If at any time you will be *reversing* spindle rotation, make sure the two set screws in the face plate are tight! One of these is shown in Figure 22. Failure to do this may cause the face plate to loosen from the headstock spindle.**

5. To *remove* the face plate, loosen the two socket set screws (Figure 22). Engage the spindle lock button and turn the face plate counterclockwise with the face plate wrench, as shown in Figure 21.

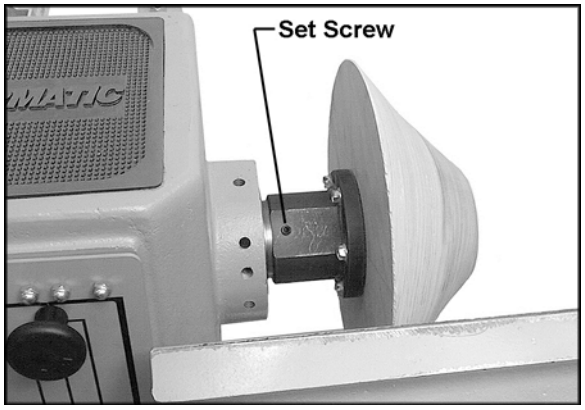

Figure 22

Comparator – Installing and Using

The spindle comparator consists of two comparator centers inserted into the brackets at the back of the Lathe. The comparator is used to mount a finished, or “reference spindle” from which measurements can be taken, the measurements being transferred to the new piece which is being turned.

WARNING **The guard must be removed to use the spindle comparator. Use caution and wear a face mask when turning without the guard installed.**

1. Remove the guard from the headstock bracket.

2. Install the comparator *spur center* into the headstock bracket, by lifting up on the spring pin and inserting the comparator spur center until its point is about even with the point of the spur center in the headstock spindle. See Figure 23. The spring pin in the bracket should engage one of the holes in the comparator center at this position.

3. Install the *rear* comparator center in the tailstock bracket and tighten the bracket handle. See Figure 24.

4. Mount the spur center with the spindle blank that you will be turning. Loosen the tailstock locking handle, and slide the tailstock until the live center is about 1-inch from the spindle blank, then tighten the locking handle. Advance the live center using the tailstock handwheel, until the live center is secured in the spindle blank.

5. Mount the reference spindle between the comparator centers, as shown in Figure 24.

   NOTE: The reference spindle should be mounted last after all adjustment of the tailstock and ram has been accomplished with the spindle blank. Likewise, when turning operation is complete, remove the reference spindle first.

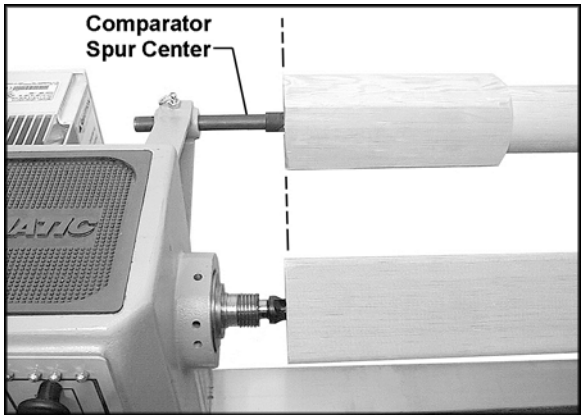

Figure 23

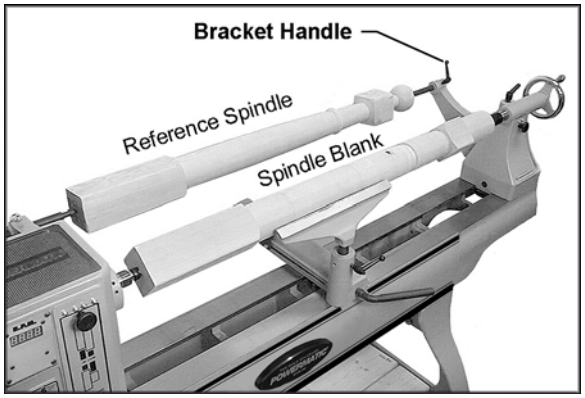

Figure 24
(shown with optional 18" bed extension)

Speed Change

1. Disconnect Lathe from power source.

2. To change speed ranges, pull open the access door on the headstock.

3. Loosen the pivot lock handle (A, Figure 25) and lift up the tension handle (B, Figure 25) to raise the motor. Tighten the pivot lock handle (A, Figure 25) to hold the motor in the raised position.

4. There should be sufficient slack in the belt to reposition it to the other steps on the sheaves. The label on the access door shows the required belt position.

5. Loosen the pivot lock handle (A, Figure 25) and lower the motor to tension the belt. Be sure that the Poly-V grooves of the belt seat properly in the corresponding groove of the sheave. Do not overtension; a very light pressure on the tension handle (B, Figure 25) is adequate to prevent belt slippage.

6. Tighten the pivot lock handle (A, Figure 25).

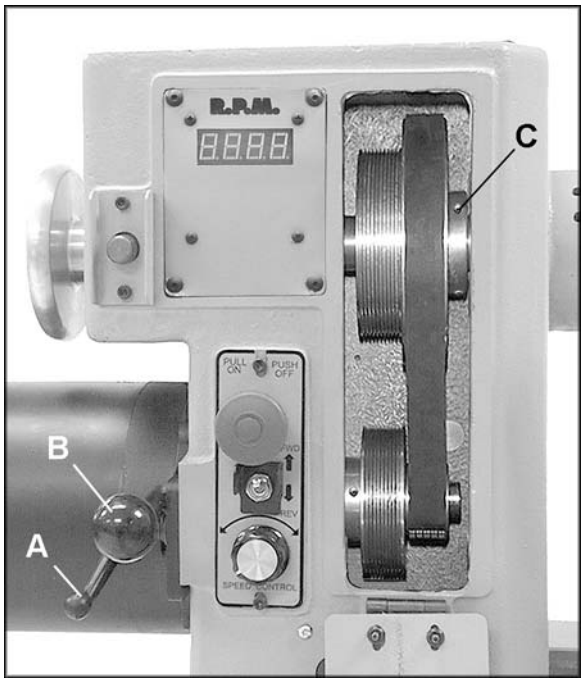

Figure 25
Belt shown in LOW speed range position

Sheave and Belt Alignment

The motor and spindle sheaves are aligned with each other at the factory, but if any service is performed that affects their alignment it is very important that they be realigned. To realign them, loosen the two set screws on the spindle sheave (C, Figure 25) with a hex wrench, and slide the spindle sheave into the proper position. Re-tighten set screws.

When sheaves and belt are properly aligned, there should be no unusual pulsing sounds or noise coming from the belt.

Checking Spindle Play

The spindle bearing has been set at the factory for general turning applications. There should be no "end play" or looseness along the spindle's axis. If any looseness should ever occur, it may be rectified by carefully tightening the bearing lock nut on the spindle, as follows. (See Figure 26).

1. Use a screwdriver to carefully bend back any tabs on the tabbed lock washer (C, Figure 26) that interfere with the insets on the bearing lock nut (B, Figure 26).
2. Place the end of a flat head screwdriver down against one of the insets of the bearing lock nut (B, Figure 26).
3. Tap the handle of the screwdriver with a mallet so that it turns the bearing lock nut (B, Figure 26) tighter in a clockwise direction. Rotate the bearing lock nut only about 1/16" at a time.

⚠CAUTION Do not over tighten the bearing lock nut or the spindle bearings will overheat.

4. The bearing lock nut should be tightened just enough to remove the end play and the spindle should still rotate very freely. Run the lathe for a time, and check for heat from the spindle bearings. If the bearings are running hot, the bearing lock nut is too tight and should be loosened slightly.
5. After the bearing lock nut (B, Figure 26) has been properly adjusted, *carefully* bend back into place any tabs on the tabbed lock washer (C, Figure 26).

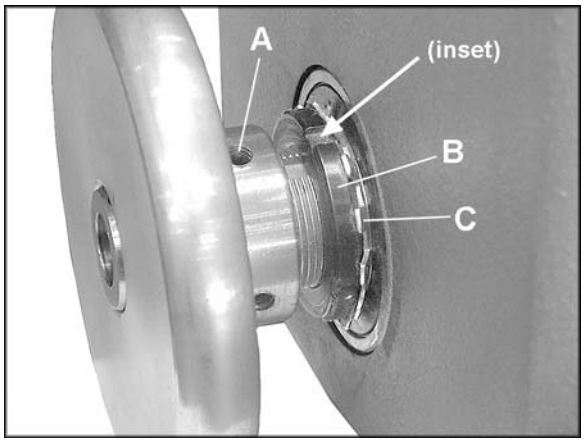

Figure 26

Sheave/Drive Belt Replacement

Replacing the spindle sheave can be a difficult procedure; it is recommended that the headstock be taken to an authorized service center for this.

1. Disconnect Lathe from power source.
2. Loosen the pivot lock handle (A, Figure 27) and lift up the tension handle (B, Figure 27) to raise the motor.
3. Tighten the pivot lock handle (A, Figure 27) to hold the motor in the raised position. Slip the belt off the pulleys.
4. Loosen the two set screws on the handwheel (A, Figure 26) with a hex wrench, and pull the handwheel off the headstock spindle.
5. Loosen and remove the bearing lock nut (B, Figure 26) and tabbed lock washer (C, Figure 26).
6. Slide the spindle a little way out of the headstock, just enough to remove sheave or belt.

   NOTE: You may have to tap the end of the spindle with a wood block to move it. (Do NOT use a steel face hammer directly against the spindle.)
7. If replacing the spindle sheave, loosen the two set screws (C, Figure 27), and slide the sheave off the spindle.
8. Install the new spindle sheave, loosely securing the two set screws. Make sure the sheave is oriented properly.
9. Slide the spindle back into place, install tabbed lock washer (C, Figure 26), and bearing lock nut (B, Figure 26). Check for any spindle play at this point (See "Checking Spindle Play").
10. Re-install the handwheel and tighten the set screws (A, Figure 26).
11. Align the new sheave (see "Sheave and Belt Alignment") then tighten the two set screws (C, Figure 26) securely on the sheave.
12. Loosen the pivot lock handle and lower the motor using the tension handle. Re-tighten the pivot lock handle.

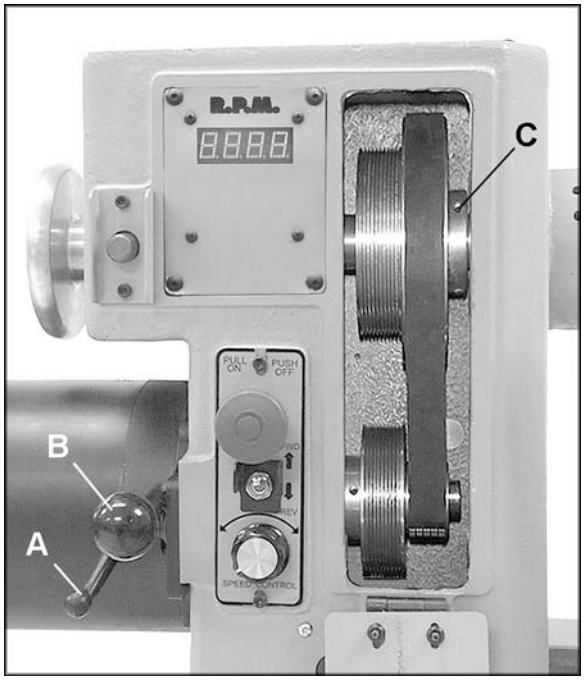

Figure 27

Operating Controls

See Figure 28.

(A) On/Off Button: Push in to stop the Lathe; pull out to start.

NOTE: If there is a power outage while operating the Lathe, the Lathe will not automatically restart once power is restored. Cycle the on/off switch in order to restart the machine.

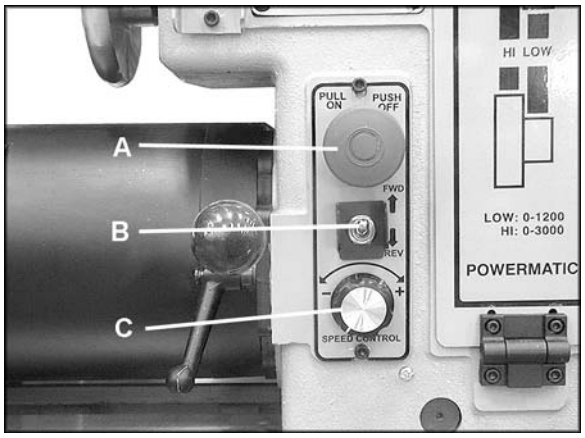

Figure 28

(B) Forward/Reverse

WARNING **When turning with a face plate, make sure both set screws on the face plate are tight (see Figure 22) before reversing the spindle. Failure to comply may cause the face plate to spin loose from the spindle.**

(C) Speed Control Dial: Always start the Lathe at the lowest speed, with the dial rotated all the way counterclockwise.

A.C. Inverter *(mounted to rear of headstock)*

The 3520B Lathe uses the latest technology in A.C. inverter drives to provide infinitely variable spindle speeds within the specified ranges (shown under “Specifications” on page 6). The inverter controls the speed of the motor by varying the frequency of the voltage supplied to the motor. The inverter provides an acceleration ramp that eliminates the shock of normal starting. Also, a braking feature eliminates long coasting periods after the Lathe is turned off.

The 2 horsepower motor is specially designed for use with inverter drives, and is balanced to reduce noise and minimize vibration.

The A.C. Inverter does not require any programming – it is pre-programmed from the factory. **The buttons on the face of the inverter should never be pushed at any time.** Use only the controls on the front of the headstock.

If you suspect there is a problem with the inverter or the inverter settings, contact Powermatic technical service at 1-800-274-6848.

CAUTION **A lightning strike or power surge may cause the inverter to fail. When lathe is not in use, disconnect power plug, or have a 3- or 4-pole disconnect installed on the power side.**

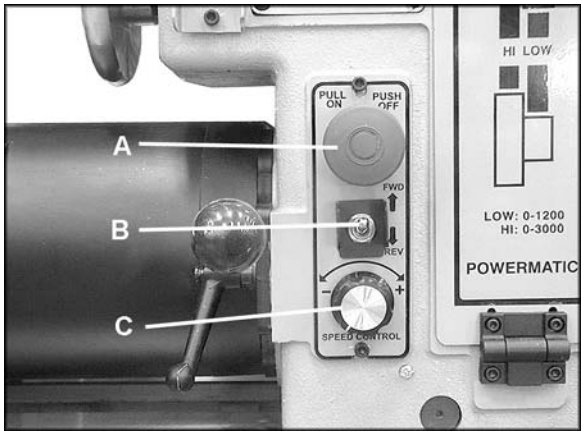

Figure 28 (repeated)

Operation

The information which follows is general in nature and is not intended to be a complete course in wood turning. Nothing can replace the knowledge gained by talking with experienced woodturners or consulting books, articles, etc. Above all, simple trial and error will aid in developing proficiency in the craft.

Inspection

Before operating the lathe, check that everything is in proper working order:

1. Level your machine; use the adjustable levelers to help reduce vibration.
2. Check bearings; adjust only if endplay exists.
3. Check belt; it should be snug but not overly tight.
4. Bed ways; keep clean, use steel wool to remove any rust spots, and apply paste wax to prevent buildup of rust and finishes.
5. Tool support; use a mill file to remove nicks and dings.
6. Spindle tapers; should be clean and free of dust and chips for proper seating of tapers.
7. Tailstock; clean and lubricate ram and locking device.
8. Lighting; proper lighting is essential to eliminate shadows and reduce eye strain.

Turning Tools

If possible, select only quality, high-speed steel turning tools. High-speed steel tools hold an edge and last longer than ordinary carbon steel. As one becomes proficient in turning, a variety of specialty tools for specific applications can be acquired. The following tools provide the basics for most woodturning projects (see Figure 29):

Skews – 1-1/2" and 1" or 1-1/4", used to make finishing cuts and details.

Large Roughing Gouge – 1" to 1-1/4", used to eliminate waste wood.

Spindle Gouges – 1/4", 3/8", 1/2", used to turn beads, coves and other details.

Deep Fluted Bowl Gouge – 1/4", 3/8" and 1/2", used for turning bowls & plates.

Square Scraper (Bedan) – 3/8" or 1/2", used to create square shoulders.

Large Round Nose (Domed) Scraper – 1-1/2", used to reduce ridges on interior of bowls, round edges of bowls, etc.

Parting Tool - 1/8", used for scraping, making a cut-off, or to set diameters for sizing.

For safety and best performance, *keep tools sharp*. If a tool stops cutting or requires excessive pressure to make a cut, it needs to be sharpened. A number of brand name sharpening jigs and fixtures are available; however, a woodturner should learn to sharpen tools freehand.

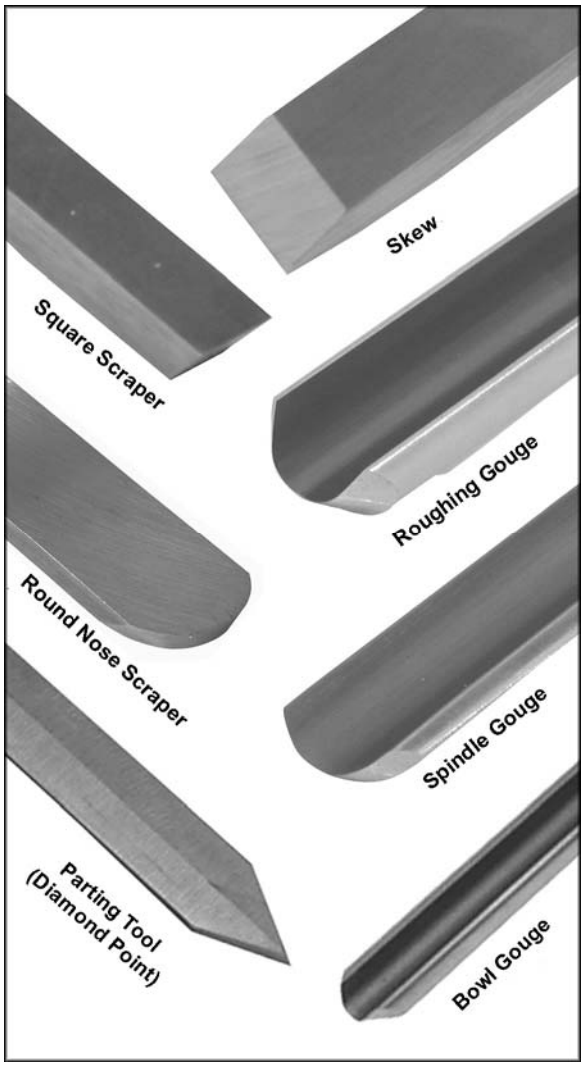

Figure 29
Basic Turning Tools

For best results, use a slow speed grinder (1800 rpm) fitted with a 60-grit aluminum oxide wheel (for shaping) and a 100-grit alum. oxide wheel (for final sharpening and touchup). The grinder should be located near your lathe and at a comfortable height. A diamond dresser will keep the wheels true and eliminate glazing.

Never allow the tool to rest in one place on the wheel, keep it moving and use a light touch.

Carbon steel tools can overheat easily and should be cooled frequently. If the edge turns blue, it has lost its temper and should be ground past the blue area. High-speed steel tools are not as likely to overheat, but can be damaged if allowed to get red hot. High-speed steel tools should not be quenched for cooling. Honing with a diamond lap or slipstone will save trips to the grinder and keep the edge fresh.

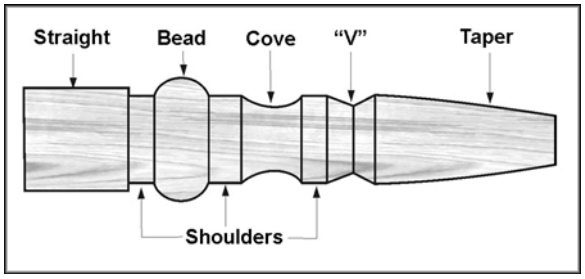

Figure 30

Spindle Turning

Spindle turning takes place between the centers of the lathe. It requires a spur or drive center in the headstock and a live or dead center in the tailstock. A cup center rather than a cone center in the tailstock will often reduce the risk of splitting the stock.

Figure 30 shows the basic profile shapes in spindle turning.

Stock Selection

Stock for spindles should be straight grained and free of checks, cracks, knots and other defects. It should be cut 1/8" to 1/4" larger than the finished diameter and may require additional length so the ends can be removed later. Larger stock should have the corners removed to produce an octagon making the piece easier to rough down to a cylinder.

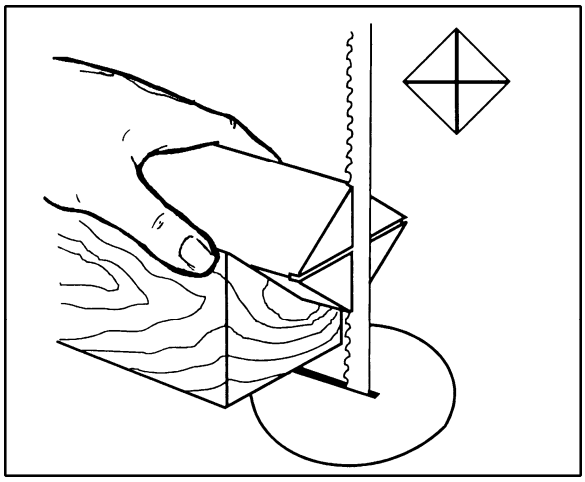

Figure 31

1. With a combination square, or plastic center finder for round stock, locate and mark center on each end of the workpiece. Accuracy is not critical on full rounds but extremely important on stock where square sections are to remain. Put a dimple in the stock with an awl or nail, or use a spring-loaded automatic center punch.

2. Extremely hard woods may require kerfs cut into the ends of the stock (Figure 31) using a band saw, so the wood will accept the spur center and the live center.

3. Drive the spur center about 1/4" into the workpiece, using a wood mallet or dead blow hammer as shown in Figure 32. Be careful that you do not split the workpiece. **Never use a steel face hammer and never drive the workpiece onto the spur center while it is mounted in the Lathe spindle.**

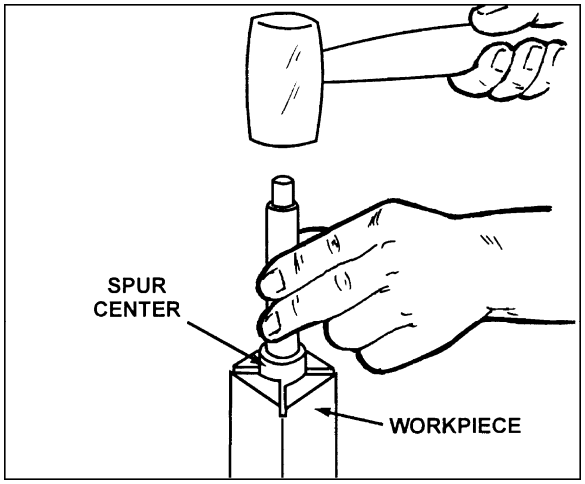

Figure 32

4. Make sure the headstock is locked to the Lathe bed.
5. Clean the tapered end of the spur center and the inside of the headstock spindle.
6. Insert the tapered end of the spur center (with the attached workpiece) into the headstock spindle.
7. Support the workpiece while bringing the tailstock into position about 1” away from the end of the workpiece. Lock the tailstock to the bed.
8. Advance the tailstock spindle with the handwheel in order to seat the live center into the workpiece. Use enough pressure to secure the workpiece between the centers so that it won’t fly off, but do not use excessive pressure.
9. Tighten the spindle locking handle.

⚠CAUTION The tailstock ram is capable of exerting excessive pressure against the workpiece and the headstock. Apply only sufficient force with the tailstock to hold the workpiece securely in place. Excessive pressure can overheat center bearings and damage both workpiece and Lathe.

10. Move tool support into position. It should be parallel to the workpiece, just below the centerline and approximately 1/8" to 1/4" from the corners of the workpiece to be turned, as in Figure 33. Tighten support base to Lathe bed.
11. Rotate workpiece by hand to check for proper clearance.
12. Start lathe at lowest speed and bring it up to the appropriate RPM for the size of workpiece used. Consult digital readout on the headstock.

Cutting Techniques

Roughing Out

1. Begin with a large roughing gouge. Place the tool on the tool support with the heel of the tool on the surface to be cut.
2. Slowly and gently raise tool handle until cutting edge comes into contact with the workpiece.
3. Beginning about 2” from the tailstock end of the workpiece, roll the flute (hollowed-out portion) of the tool in the direction of the cut. See Figure 34. Make long sweeping cuts in a continuous motion to rough the piece down to a cylinder.

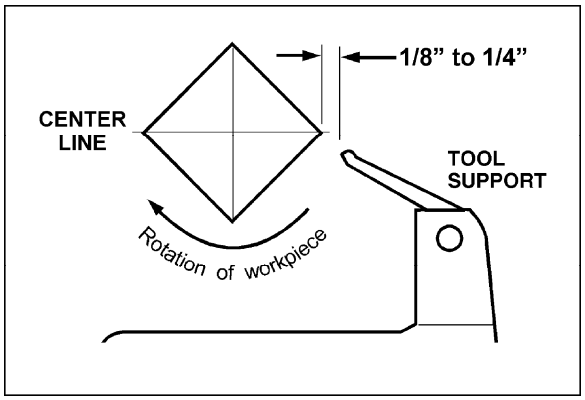

Figure 33

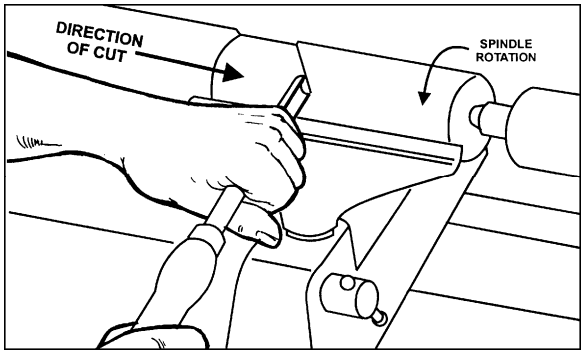

Figure 34

4. Keep as much of the bevel of the tool as possible in contact with the workpiece to ensure control and avoid catches. NOTE: Always cut down-hill, or from large diameter to small diameter. Always work *toward* the end of a work-piece, never start cutting at the end.

5. Once the workpiece is roughed down to a cylinder, smooth it with a large skew. Keep the skew handle perpendicular to the spindle and use only the center third of the cutting edge for a long smoothing cut (touching one of the points of the skew to the spinning workpiece may cause a catch and ruin the workpiece).

6. Add details to the workpiece with skew, parting tool, scraper or spindle gouge.

Beads

1. Make a parting cut for what is to be a bead to the desired depth. Place the parting tool on the tool support and move tool forward to make the full bevel of the tool come into contact with the workpiece. Gently raise handle to make cut to the appropriate depth.

2. Repeat for other side of the bead.

3. Using a small skew or spindle gouge, start in the center between the two cuts and cut down each side to form the bead. Roll the tool in direction of cut.

Coves

1. Use a spindle gouge. With the flute of the tool at 90 degrees to the workpiece, touch the point of the tool to the workpiece and roll in towards the bottom of the cove. See Figure 35. **Stop at the bottom; attempting to go up the opposite side may cause the tool to catch.**

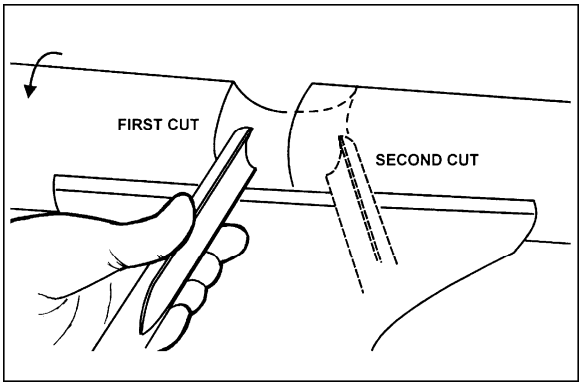

Figure 35

2. Move the tool over the desired width of the cove.

3. With the flute facing the opposite direction, repeat step 1 for other side of cove. Stop at bottom of cut.

"V" Cuts

1. Use the long point of the skew. (NOTE: Do not press the long point of the skew directly into the workpiece to create the "V"; this will result in a burned or burnished "V" with fibers being rolled up at both sides.)

2. Lightly mark the center of the "V" with the tip of the skew.

3. Move the point of the skew to the right half of the desired width of your cut.

4. With the bevel parallel to the right side of the cut, raise the handle and push the tool in to the desired depth, as shown in Figure 36.

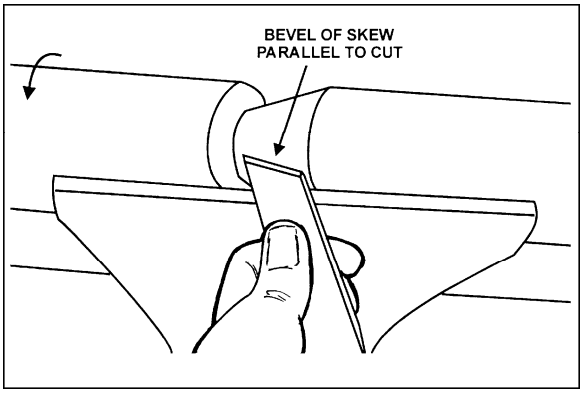

Figure 36

5. Repeat from the left side. The two cuts should meet at the bottom and leave a clean "V" cut.

6. Additional cuts may be taken to add to either the depth or width of the cut.

Parting Off

1. Use parting tool.

2. Adjust lathe speed to lower RPM for parting through a workpiece.

3. Place tool on tool support and raise the handle until it starts to cut and continue to cut toward the center of the workpiece.

4. Loosely hold on to the piece in one hand as it separates from the waste wood.

Sanding and Finishing

Leaving clean cuts will reduce the amount of sanding required. Move the tool support out of the way, adjust the lathe to a **low speed**, and begin with fine sandpaper (120 grit or finer). Coarser sandpaper will leave deep scratches that are difficult to remove, and dull crisp details on the spindle. Progress through each grit without skipping grits (for example, do not jump from 120 grit to 220 grit). Fold the sandpaper into a pad; do not wrap sandpaper around your fingers or the workpiece.To apply a finish, the workpiece can be left on the lathe.

Turn off the lathe and use a brush or paper towel to apply the finish. Remove excess finish before restarting lathe. Allow to dry and sand again with 320 or 400 grit sandpaper. Apply second coat of finish and buff.

Face Plate and Bowl Turning

Face plate turning is normally done on the inboard side of the headstock over the bed. Larger workpieces must be turned on the outboard side (remove tailstock and tool support base, and move headstock to opposite end of bed - see Figure 9).

Mounting Stock

Use of a face plate is the most common method for holding a block of wood for turning bowls and plates:

1. Select stock at least 1/8" to 1/4" larger than each dimension on the finished workpiece.
2. Always select the largest diameter face plate that can be used for the workpiece to be turned.
3. True one surface of the workpiece for mounting against the face plate.
4. Using the face plate as a template, mark the location of the mounting holes on the workpiece, and drill pilot holes of the appropriate size. Face plates are drilled for No. 12 screws. (Phillips and square drive screws will hold up better than slotted screws. Sheel metal screws are case hardened with deeper and sharper threads than wood screws.)

If the mounting screws on the face plate interfere with the workpiece, a glue or waste block can be used:

5. Make a block the same diameter as the face plate, Figure 37. Both waste block and workpiece should have flat surfaces for gluing.
6. Glue the block to the workpiece. Avoid using brown paper or newspaper between the waste block and workpiece. It may work fine if you are using scrapers, but a slight catch with a bowl gouge can separate the two.

NOTE: When using a waste block, be careful with the adhesive you select. Dry workpieces can be bonded with ordinary white or yellow glue but must be clamped to ensure a good bond. Green workpieces require cyanoacrylate type glue.

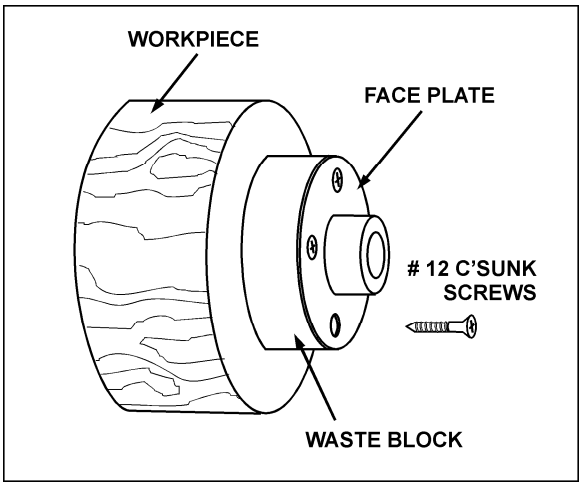

Figure 37

Faceplate or Chuck?

While faceplates are the simplest, most reliable method of holding a block of wood for turning, chucks can also be used. As there are dozens of chucks to choose from, the woodturner should first consider all the different types of turning that will be done, and read reports or discuss with other turners who own chucks before making a decision.

A chuck is not a requirement, but is handy when working on more than one piece at a time. Rather than removing screws, you simply open the chuck and change workpieces.

The most popular ones are four jaw scroll chucks with a variety of jaws to accommodate different size tenons. Most also come with a screw chuck as well.

Wood Selection

Firewood is the cheapest, most widely available stock to use while learning to turn bowls. Simply waste wood for a while practicing turning techniques. Develop skill with each tool before attempting to make a finished piece. It is best to start with dry wood, without worrying about drying or distortion. Once turning becomes comfortable, try green wood which cuts very easily. As the turner gains experience, he or she will find extraordinary grain and figure in the form of burls, crotches and bark inclusions.

Checks and Cracks

Green wood will check and crack. For best results, leave logs in as long a length as you can handle. As the material starts to dry, surface cracks will develop on the ends of the log. Cut off two to three inches and you should find good, sound wood. Also cut the log in half along the pith to avoid having it in the finished piece. Most checks radiate from the pith.

As you turn bowls from green wood, make sure you maintain a consistent wall thickness throughout the piece. Leaving a piece thick in some areas and thin in others will cause the wood to dry unevenly and promote checks and cracks.

Distortion

Distortion is a problem associated with turning green wood. It will vary from one type of wood to the next. Typically, fruitwoods tend to distort more than others. It also varies with the time of year the tree was cut and how the logs are stored.

Tools for Bowl Turning

The deep fluted bowl gouge is the most essential and versatile tool for most bowl and plate turning. The bowl gouge is heavier and easier to control than other types of gouges. It also allows removal of wood much faster and with less vibration than other gouges. Most average sized bowl work can be accomplished with a 3/8" or 1/2" bowl gouge. A 1/4" bowl gouge is best suited for smaller bowls and light finishing cuts. Larger 3/4" and 1" bowl gouges are only used for extremely large pieces.

Large domed scrapers can also be used to help clean up the interior surfaces of bowls. A light touch with the scraper slightly tilted will eliminate some of the ridges occasionally left by an inexperienced bowl gouge.

Bowl Turning Techniques

To Shape Outside of Bowl

1. Odd shaped burls, crotches and other irregular shaped blanks require special preparation before mounting in a chuck or onto a faceplate. Remove the bark, if there is any, from what appears to be the center of the top of the workpiece.
2. Drive spur center into the top of the workpiece with a mallet or dead blow hammer.
3. Slip the spur center into the headstock taper and bring the tailstock with a live or ball bearing center into position. Lock the tailstock to the bed and advance the tailstock spindle in order to seat the cup center into the workpiece. Tighten the ram locking handle.
4. Turn workpiece by hand to ensure proper clearance.
5. Start lathe at lowest speed and bring it up to the maximum safe speed for the size of work to be turned (see page 30). If the machine starts to vibrate, lower the speed until vibration stops.
6. Rough out the outside of the bowl with the 1/2" deep fluted bowl gouge, holding the handle of the tool firmly against your hip. For best control, use your whole body to move the gouge through the workpiece.
7. As the bowl takes shape, work on the bottom (tailstock end) to accomodate attaching a face plate.
8. Turn a short tenon (about 1/8" long) the size of the hole in the faceplate. See Figure 38. This will allow centering the workpiece when the faceplate is attached.

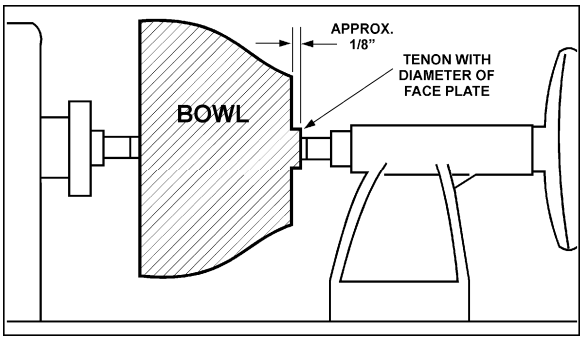

Figure 38

9. (NOTE: If you plan to use a chuck, turn a tenon of the appropriate length and diameter to fit your chuck.)
10. Stop the lathe, remove workpiece and attach face plate or chuck (see "Mounting Stock" on page 25).

WARNING The surfaces of faceplate and workpiece should mount flush to each other.

11. Finish turning the outside of bowl with 1/2" or 3/8" bowl gouge. Leave additional material at base of bowl for support while turning interior. This will be removed later.

To Shape Interior of Bowl

1. Stop the lathe and move tailstock away. (You may want to remove the center from the tailstock to avoid bumping it with your elbow.)
2. Adjust tool support in front of the bowl just below centerline, at a right angle to the lathe ways.
3. Rotate workpiece by hand to check clearance.
4. Face off top of bowl by making a light shearing cut across the top of workpiece, from rim to center.

5. Place 1/2" bowl gouge on tool support at center of the workpiece with the flute facing top of bowl. The tool handle should be level and pointed toward the four o'clock position, as shown in Figure 39.

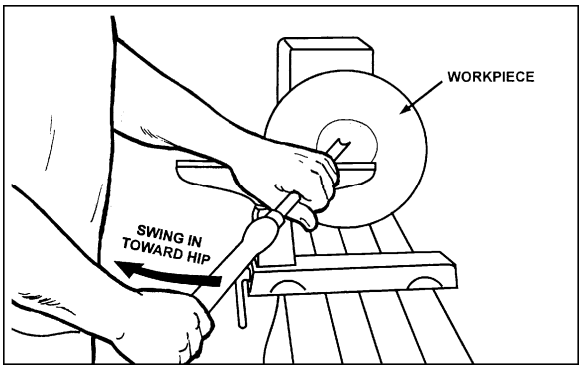

Figure 39

6. Use the left hand to control cutting edge of gouge, while right hand swings tool handle around toward your body (Figure 39). The flute should start out facing top of workpiece, and rotate upward as it moves deeper into the bowl to maintain a clean even curve. As the tool goes deeper into the bowl, progressively work out toward the rim. It may be necessary to turn the tool support into the piece as you get deeper into the bowl.

   (NOTE: Try to make one, very light continuous movement from the rim to the bottom of the bowl to ensure a clean, sweeping curve through the piece. Should there be a few small ridges left, a light cut with a large domed scraper can even out the surface.)

7. Develop wall thickness at the rim and maintain it as you work deeper into the bowl (Once the piece is thin toward the bottom, you cannot make it thinner at the rim). When the interior is finished, move the tool support to exterior to re-define bottom of bowl. (General rule of thumb: the base should be approximately 1/3 the overall diameter of the bowl).

8. Work the tight area around faceplate or chuck with 1/4" bowl gouge.

9. Begin the separation with a parting tool, but do not cut all the way through yet.

Sanding and Finishing

1. Remove the tool support and adjust lathe speed to approximately 500 RPM. High speed can build friction while sanding and cause heat check in some woods.

2. Begin with fine sandpaper (120 grit) and progress through each grit, using only light pressure. Coarser sandpaper tends to leave deep scratches that are hard to eliminate. Use power-sanding techniques to avoid concentric sanding marks around your finished piece. Avoid rounding over the rim and foot with sandpaper; try to keep details crisp. Finish sanding with 220 grit.

3. Remove sanding dust with tack rags or compressed air and, with lathe turned off, apply first coat of finish. Let stand for several minutes, wipe off excess. Allow to dry before sanding again with 320 or 400 grit sandpaper.

4. Turn lathe back on and continue the separation cut almost all the way through the base. Stop at about 3" and use a small fine tooth saw to separate the bowl from the waste.

5. Apply second finish coat and allow to dry before buffing.

Maintenance

⚠WARNING Before doing maintenance on the Lathe, disconnect it from the electrical supply by pulling out the plug or switching off the main switch. Failure to comply may cause serious injury.

Maintenance on the 3520B Lathe should be performed at periodic intervals to ensure that the machine is in proper working order, that all fasteners are tight, and all necessary adjustments have been made. Inspection and maintenance should be performed at least twice a year, but more frequently if the Lathe receives constant use.

Clean and oil the lathe bed(s) so that headstock, tailstock and tool support base will slide easily. Clean any rust spots that may develop on the bed with a commercial rust remover.

Use compressed air to blow out the interior of the headstock, in order to keep sawdust and chips from accumulating on belts and sheaves. Also blow off debris that accumulates on the inverter. **Do not disassemble inverter to clean!**

Frequently clean out the morse tapers on both headstock and tailstock. Commercially available taper cleaners may be acquired from tool stores.

Indexer Positions

How to use the chart

The indexer is shown as viewed from the tailstock end of the Lathe. Points A, B, C and D are the holes in the head casting. The holes in the spindle collar may be considered as numbered 1 through 12.

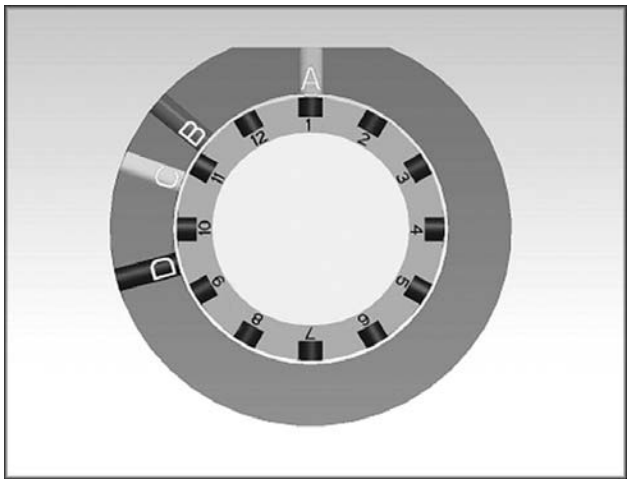

Example: You wish to rout 9 flutes on your spindle blank. Locate the “9” in the “No. of Flutes” column; each flute angle will be 40°. The index pin should first be inserted into hole combination “A-1”. Make your first flute at this position. Back off the index pin and rotate the spindle until the index pin can be inserted into hole combination “A-5”; this will be followed by “A-9”. Succeeding flutes will be made with the index pin in the B position: “B-2”, “B-6” and so on.

No. of Flutes 360° divided by...	Angle	Letter	#	Letter	#	Letter	#	Letter	#
1	360.00	**A**	1						
2	180.00	**A**	1,7						
3	120.00	**A**	1,5,9						
4	90.00	**A**	1,4,7,10						
5	72.00	----------							
6	60.00	**A**	1,3,5,7,9,11						
8 *	45.00	**A**	1,4,7,10					**D**	2,5,8,11
9	40.00	**A**	1,5,9	**B**	2,6,10	**C**	4,8,12		
10	36.00	----------							
12	30.00	**A**	1 to 12						
15	24.00	----------							
16	22.50	----------							
18	20.00	**A**	1,3,5,7,9,11	**B**	2,4,6,8,10,12	**C**	2,4,6,8,10,12		
20	18.00	----------							
24 *	15.00	**A**	1 to 12					**D**	1 to 12
30	12.00	----------							
36	10.00	**A**	1 to 12	**B**	1 to 12	**C**	1 to 12		
other interesting patterns....									
18	20.00	**A**	1,3,5,7,9,11	**B**	1,3,5,7,9,11	**C**	1,3,5,7,9,11		

NOTE: A dashed line indicates that particular set of angles is not possible with the indexer.

Figure 40

Troubleshooting

Trouble	Probable Cause	Remedy
Motor fails to develop full power.	Power line overloaded.	Correct overload condition.
	Undersize wires in power supply system.	Increase supply wire size.
	Faulty inverter.	Contact Powermatic Technical Service.
	Worn motor.	Replace motor.
Motor or spindle stalls or will not start.	Excessive cut.	Reduce depth of cut.
	Improper belt adjustment, or worn or broken belt.	Adjust or replace belt as needed (see pages 18-19).
	Improper cooling of motor.	Blow out sawdust from motor housing fan.
	Worn spindle bearings.	Replace bearings.
	Worn motor.	Replace motor.
Excessive vibration.	Workpiece warped, out of round, has major flaw, or was improperly prepared for turning.	Correct problem by planing or sawing workpiece, or discard entirely and use new workpiece.
	Worn spindle bearings.	Replace spindle bearings.
	Worn drive belt.	Replace drive belt. See pages 18-19.
	Motor mount lock handle is loose.	Tighten lock handle (A, Figure 25).
	Lathe on uneven surface.	Adjust levelers.
Lathe runs at one speed only.	Potentiometer faulty.	Replace potentiometer.
	Electronic AC inverter is not programmed properly, or is defective, or there is loose wiring.	Contact Powermatic Technical Service to help identify problem; 800-274-6846.
Tools tend to grab or dig in.	Dull tools.	Keep tools sharp (see page 21).
	Tool support set too low.	Reposition tool support height. See page 23.
	Tool support set too far from workpiece.	Reposition tool support closer to workpiece. See page 23.
	Improper tool being used.	Use correct tool for operation.
Headstock moves when applying pressure with Tailstock.	Excessive pressure being applied by tailstock (more than 500 lbs. of force).	Slide headstock to the left end, then apply pressure to workpiece with tailstock. Apply **only** sufficient force with tailstock to hold workpiece securely in place.
Tailstock moves when applying pressure.	Cam lock nut needs adjusting.	Tighten cam lock nut (Figure 15).
	Lathe bed and tailstock mating surfaces are greasy or oily.	Remove tailstock and clean surfaces with a cleaner/degreaser. Re-apply light coat of oil to Lathe bed surface.

Recommended Lathe Speeds (per diameter of workpiece)

Diameter of Work	Roughing RPM	General Cutting RPM	Finishing RPM
Under 2”	1520	3000	3000
2” to 4”	760	1600	2290
4” to 6”	510	1080	1500
6” to 8”	380	810	1125
8” to 10”	300	650	900
10” to 12”	255	540	750
12” to 14”	220	460	640
14” to 16”	190	400	560
16” to 20”	175	325	450
20” to 24”	175	260	375

Replacement Parts

Replacement parts are listed on the following pages. To order parts or reach our service department, call 1-800-274-6848, Monday through Friday (see our website for business hours, www.powermatic.com). Having the Model Number and Serial Number of your machine available when you call will allow us to serve you quickly and accurately.

Headstock Assembly

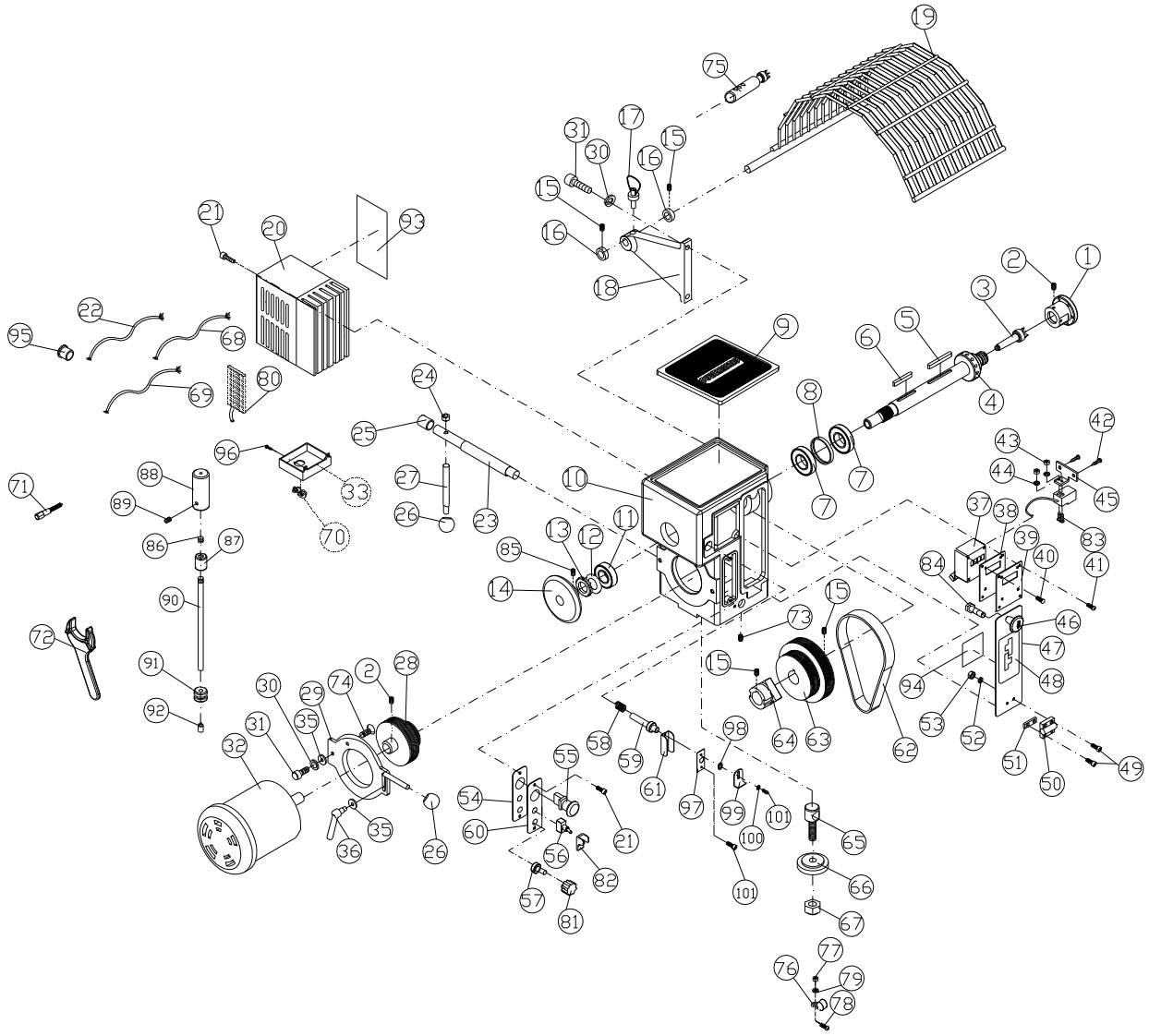

Parts List: Headstock Assembly

Index No.	Part No.	Description	Size	Qty
1	6294736	Faceplate	3”	1
2	6295796	Nyloc Insert Socket Set Screw	1/4-20x3/8”	4
3	6294725	Spur Center	MT2	1
4	3520B-204	Spindle		1
5	3520B-205	Key	8x8x75	1
6	3520B-206	Key	8x8x45	1
7	BB-6207ZZ	Bearing	6207ZZ	2
8	3520B-208	Bushing		1
9	3520B-209	Cushion		1
10	3520B-210	Headstock		1
11	BB-6206VV	Bearing	6206VV	1
12	6864006	Bearing Lock Washer		1
13	6549006	Bearing Nut		1
14	3271081	Handwheel		1
15	TS-0270011	Socket Set Screw	5/16-18x1/4”	6
16	6143004	Collar Retaining		2
17	6644005	Plunger		1
18	3064711	Lathe Guard Bracket		1
19	6294728	Safety Guard		1
20	JWL1642-164A	Inverter, VFD015S21U	2HP, 220V	1
21	6710015	Socket Head Cap Screw	#10-24x1/2”	10
22	JWL1642-170	Signal Cord		1
23	3520B-223	Headstock Clamping Shaft		1
24	TS-0640091	Nylon Lock Hex Nut	3/8”-16	1
25	6095038	Bushing		1
26	6430045	Knob		2
27	3268219	Handle, Headstock		1
28	3719189	Motor Sheave		1
29	2595036	Motor Assembly Plate		1
30	TS-0720091	Lock Washer	3/8	3
31	TS-0209061	Socket Head Cap Screw	3/8-16x1-1/4”	3
32	3520B-232	Motor	2HP, 220V, 60Hz	1
	PM2000-MF	Motor Fan		1
	70-4101-2	Motor Fan Cover		1
33	JWL1642-166	Bracket		1
35	TS-0680042	Flat Washer	3/8	2
36	6350031	Motor Plate Locking Handle		1
37	JWL1642-130A	Digital Readout		1
	JWL1642-130S	Digital Readout Sensor (not shown)		1
38	3520B-238	Plate		1
39	3520B-239	DRO Cover		1
40	JWL1642-127	Tap Screw	M3x10	4
41	TS-0253031	Socket Head Button Screw	#10-24x1/2”	4
42	JWL1642-134	Tap Screw	1/4”x1/2”	2
43	TS-1540011	Nut	M3	2
44	TS-2361031	Lock Washer	M3	2
45	JWL1642-135	Bracket		1
46	6295717	Knob		1
47	3520B-247	Door Panel		1
48	3520B-248	Speed Label		1
49	6708019	Socket Head Cap Screw	#8-32x5/8”	2
50	6365012	Door Hinge		1
51	6295911	Pad		1
52	6860704	Flat Washer	#8	2
53	6508007	Nut	#8-32	2
54	3520B-254	Control Panel		1
55	6295839	Push/Pull Switch		1
56	6821492	Switch Fwd/Rev		1
57	6295915	Control Pot Assembly		1
58	6813062	Spring		1

Index No.	Part No.	Description	Size	Qty
59	3601006	Spindle Lock Plunger		1
60	3520B-260	Control Label		1
61	6294786	Spindle Lock Bracket		1
62	6077228	Micro V-Belt	260J	1
63	3719188	Spindle Sheave		1
64	3520B-264	Locking Collar		1
65	3058001	Clamp Bolt		1
66	3092095	Clamp		1
67	6520009	Nylon Lock Hex Nut	5/8”-11	1
68	6294787	Power Cord		1
69	6294790	Motor Cord		1
70	JWL1642-165	Strain Relief		3
71	3520B-271	Index Pin		
72	6294744	Face Plate Wrench		1
73	3520B-273	Set Screw	#10-24x1”	1
74	6716139	Flat Head Socket Screw	3/8-16×1”	4
75	3520B-275	Spindle Comparator Spur Center		1
76	JWL1642-183	Cable Clamp		2
77	TS-0560071	Hex Nut	#10-24	2
78	TS-081C082	Phillips Pan Head Machine Screw	#10-24x1-1/2”	2
79	TS-069204	Washer	#10	2
80	JWL1642-169	Braking Resistor		1
81	6430047	Knob		1
82	3520B-282	Bracket		1
83	6295838	Phillips Round Head Machine Screw	M3x20	2
84	TS-1490021	Hex Cap Screw	M8x16	1
85	TS-0267021	Socket Set Screw	1/4-20x1/4”	2
	6294754	Knockout Rod Assembly (includes # 86 thru 92)		1
86	TS-0270031	Socket Set Screw	5/16-18x3/8”	1
87	3520B-287	Slide Hammer		1
88	3520B-288	Slide Handle		1
89	6295796	Nyloc Insert Socket Set Screw	1/4-20x3/8	2
90	3520B-290	Rod		1
91	3520B-291	Retaining Collar		1
92	3520B-292	Brass Tip		1
93	3520B-293	Inverter Label		2
94	3520B-294	Warning Label		1
95	3520B-295	Cord Snap Ring		1
96	3520B-296	Phillips Pan Head Machine Screw	M3-0.5Px10	3
	3520B-SLP	Spindle Lock Package (includes #97 thru 100)		1
97	3520B-900	Spindle Lock Plate		1
98	4224B-143	Wear Resistant Washer		1
99	4224B-1122	Spindle Lock Tab		1
100	TS-069204	Flat Washer	#10	1
101	TS-0253031	Socket Head Button Screw	#10-24x1/2”	2

Stand and Bed Assembly

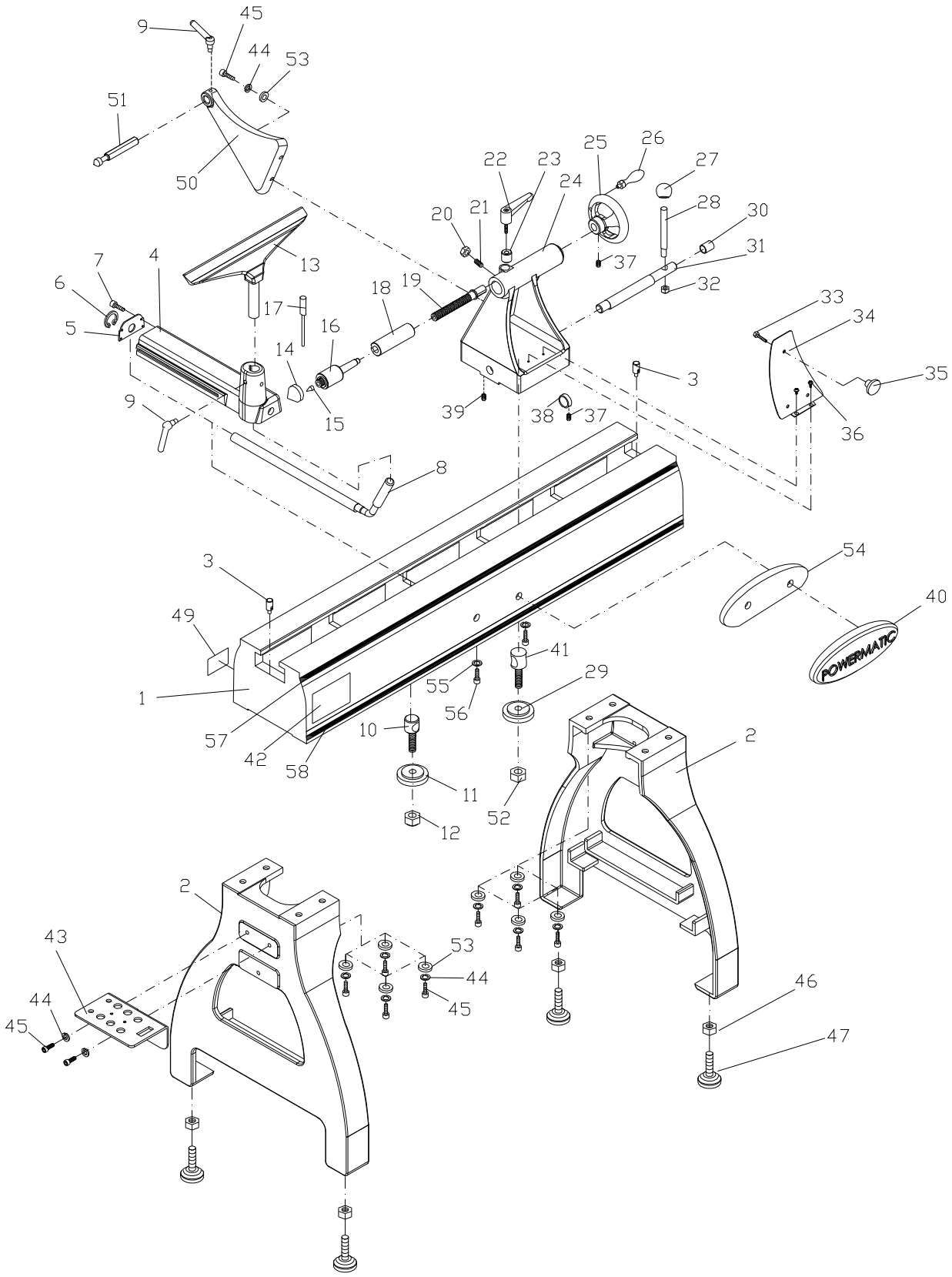

Parts List: Stand and Bed Assembly

Index No.	Part No.	Description	Size	Qty
1	3520B-101	Bed		1
2	3520B-102	Leg		2
3	6295754	Stop Bolt		2
	6294797	Tool Rest Support Assembly (includes index #4 thru #12)		1
4	3520B-104	Tool Rest Support Base		1
5	3520B-105	End Cover		1
6	3520B-106	C-Ring	S-22	1
7	6710015	Socket Head Cap Screw	#10-24x1/2”	4
8	3520B-108	Tool Support Rod		1
9	6294763	Locking Handle		2
10	3520B-110	Bolt		1
11	6294770	Clamp		1
12	TS-0650081	Nylon Lock Hex Nut	3/4”-10	1
13	6294742	Tool Support	14”	1
	6295902	Live Center Assembly (includes index #14 thru #17)		1
14	6295905	Live Center Cone		1
15	6295904	Live Center Tip		1
16	6295903	Live Center Body		1
17	6295906	Live Center Rod		1
18	3520B-118	Quill		1
19	6295909	Lead Screw		1
20	TS-0560071	Hex Nut	#10-24	1
21	3520B-121	Set Screw	#10-24x3/4”	1
22	6295910	Lock Handle		1
23	3728005	Quill Lock Sleeve		1
24	3520B-124	Tailstock		1
25	3520B-125	Tailstock Handwheel		1
26	3520B-126	Tailstock Handle		1
27	6430045	Knob		1
28	3268217	Handle		1
29	3092095	Clamp		1
30	6095038	Bushing		1
31	3708012	Tailstock Clamping Shaft		1
32	TS-0640091	Nylon Lock Hex Nut	3/8”-16	1
33	TS-1490021	Hex Cap Screw	M8x16	1
34	3520B-134	Cover Plate		1
35	6295717	Lock Knob		1
36	TS-081C022	Phillips Pan Head Machine Screw	#10-24x3/8”	2
37	TS-0270011	Socket Set Screw	5/16x1/4”	2
38	3096003	Collar		1
39	6760102	Set Screw	#10-32x1”	1
40	3520B-140	Powermatic Nameplate		1
41	3058001	Bolt		1
42	6294773	Warning Label		1
43	3520B-143	Shelf		1
44	TS-0720091	Lock Washer	3/8”	12
45	TS-0209061	Socket Head Cap Screw	3/8x1-1/4”	12
46	TS-0570031	Hex Nut	3/8”-16	4
47	6442000	Adjustable Leveler		4
49	3520B-149	I.D Label		1
50	3520B-150	Comparator Rear Bracket		1
51	3520B-151	Comparator Rear Center		1
52	6520009	Nylon Lock Hex Nut	5/8”-11	1
53	TS-0680042	Flat Washer	3/8”	10
54	3520B-154	Backer Plate		1
55	TS-0680021	Flat Washer	1/4”	2
56	TS-0207061	Socket Head Cap Screw	1/4”-20x1”	2
57	3520B-157	Stripe		1
58	3520B-158	Stripe		1

Optional Accessories: Bed Extensions

Index No.	Part No.	Description	Size	Qty
	6294727B	**18” Bed Extension Assembly** (includes items 1 thru 6)		
1	3520B-310	Extension Post		1
2	6294763	Locking Handle		1
3	3520B-311	18” Bed Extension		1
4	TS-0680042	Flat Washer	3/8”	3
5	TS-0720091	Lock Washer	3/8”	3
6	TS-0209081	Socket Head Cap Screw	3/8-16x1-3/4”	3
	6294726B	**50” Bed Extension Assembly** (includes items 7 thru 15)		
7	3520B-101	50” Bed		1
8	3520B-102	Leg		1
9	TS-0570031	Hex Nut	3/8-16x1”	2
10	6442000	Leveler		2
11	TS-0720091	Lock Washer	3/8”	4
12	TS-0209061	Socket Head Cap Screw	3/8”x1-1/4”	4
13	TS-0680042	Flat Washer	3/8”	3
14	TS-0720091	Lock Washer	3/8”	3
15	TS-0209081	Socket Head Cap Screw	3/8-16x1-3/4”	3

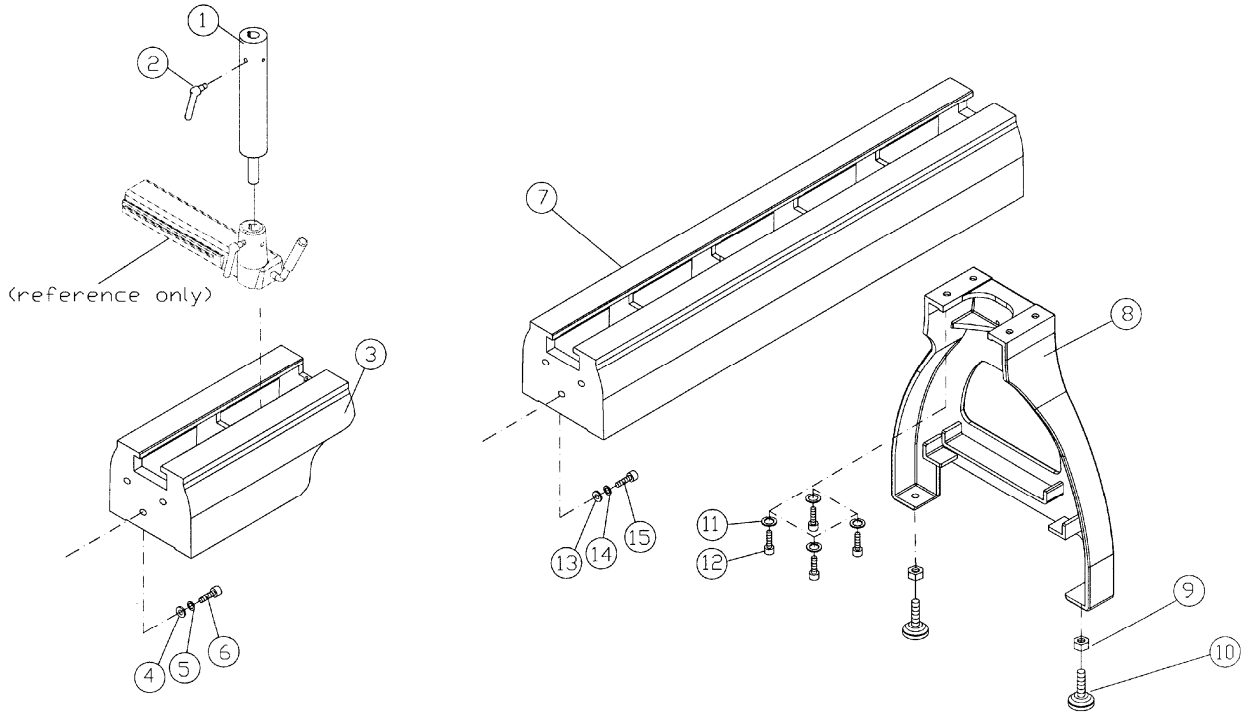

Optional Accessories: Outboard Turning Stand

Index No.	Part No.	Description	Size	Qty.
	6294732	Heavy Duty Outboard Turning Stand Assembly (items 1 thru 7)		
1	3042503	Turning Stand Base		1
2	6295897	Offset Tool Support Pin	1.00” diameter	1
3	6295898	Offset Tool Support Casting	1.00” hole	1
4	2695026	Screw Lock Assembly		3
5	3423055	Turning Stand Leg		1
6	6861700	Lock Washer	5/8”	2
7	6769002	Socket Head Cap Screw	5/8”-18 x 2”	2

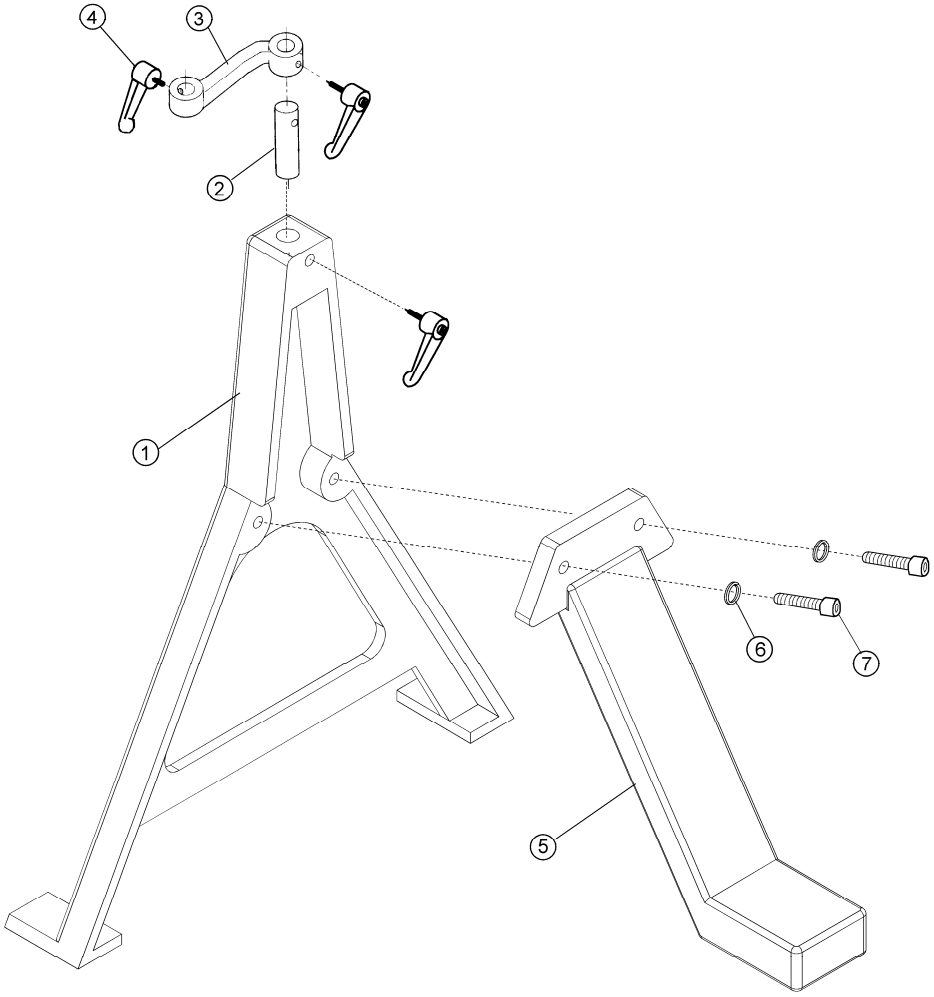

Optional Accessories: Face Plates, Tool Supports and Misc.

Index No.	Part No.	Description	Size	Qty.
1	6295902	Ball Bearing Tailstock Center (not shown)		
2	6294736	3” Face Plate	1-1/4-8	
3	6294733	Remote ON/OFF Switch		
4	6294740	Bowl Turning Tool Support (R.H.)		
5	6294751	Bowl Turning Tool Support (L.H.)		
6	6294739	6” Tool Support		
7	6294742	14” Tool Support		

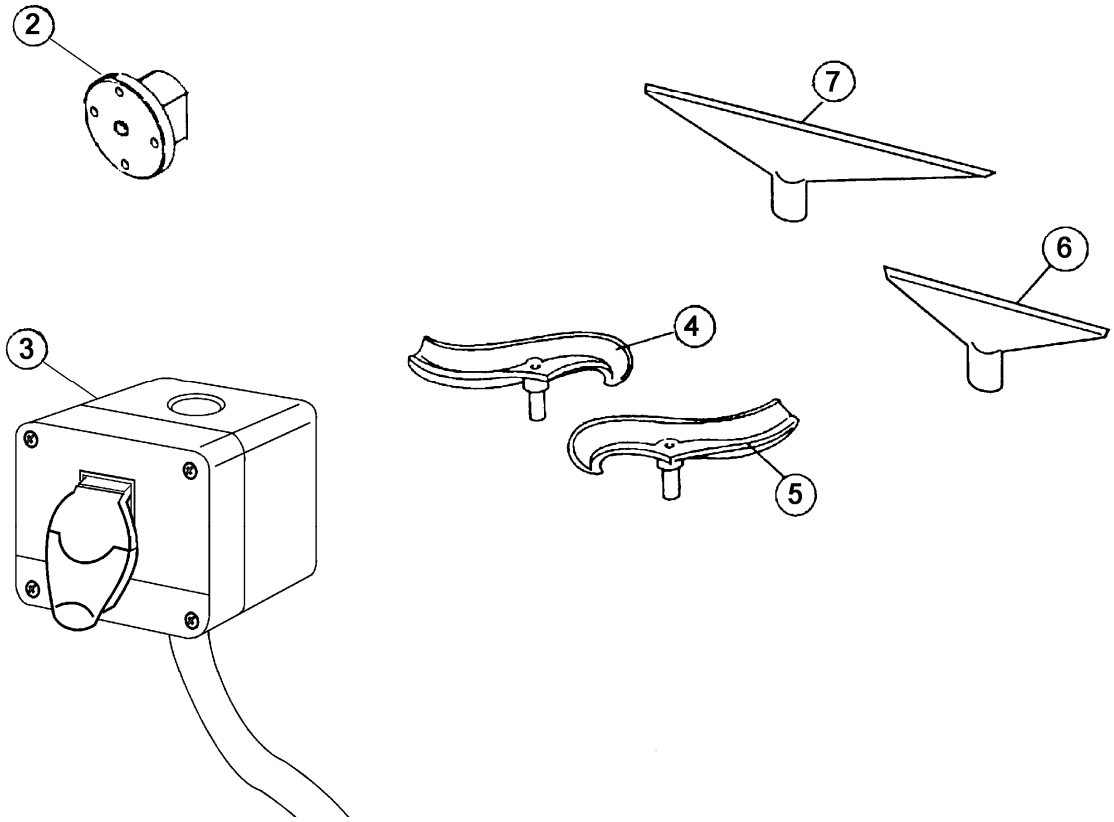

Electrical Connections

3520B Lathe Electrical Connections

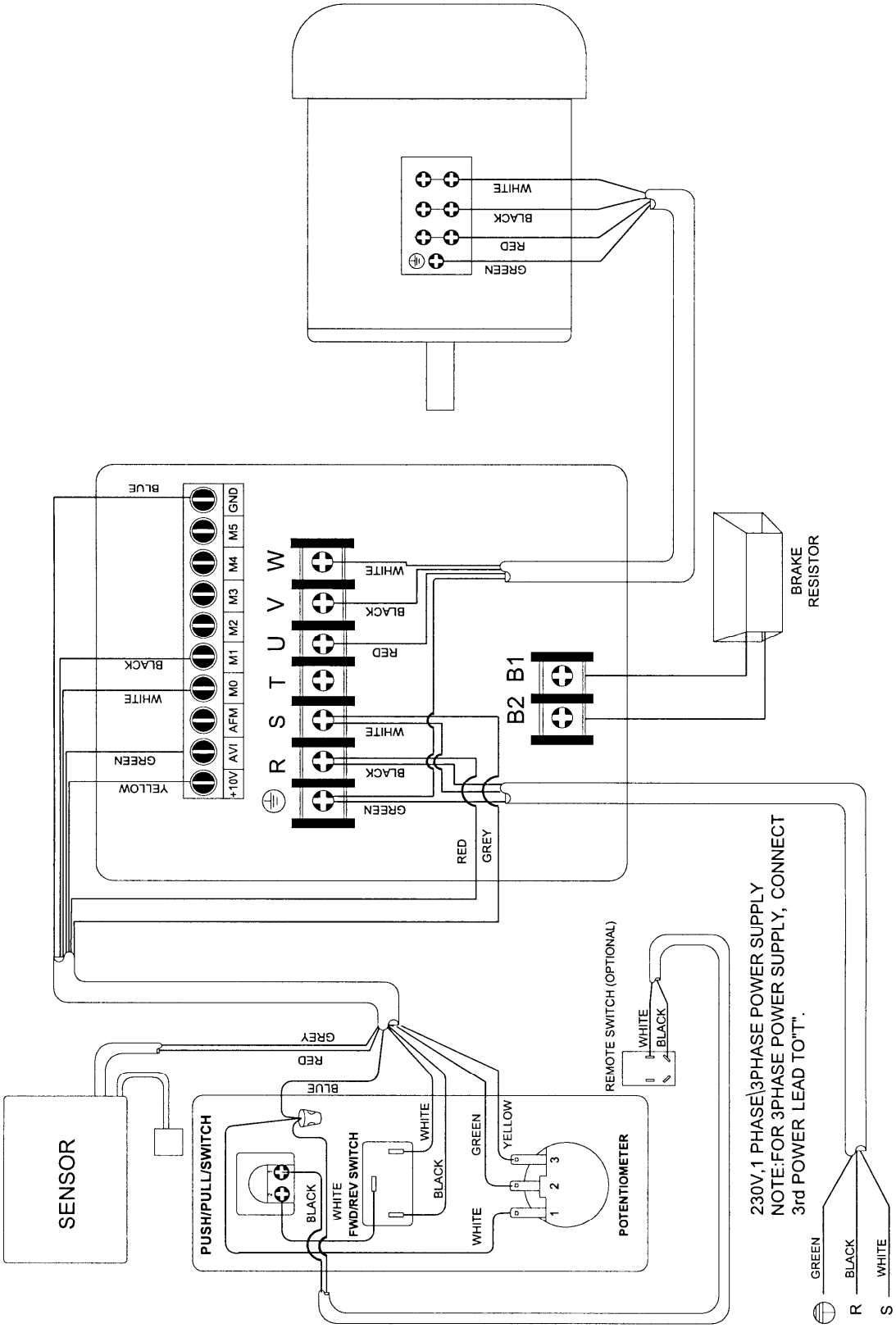

Electrical: Remote ON/OFF Switch (Optional Accessory)

NOTE: *The Lathe can only operate when both the headstock and remote switches are in the "ON" position*.

To mount the remote switch to your Lathe, proceed as follows.

1. Disconnect all electrical power to the Lathe.
2. Remove the two screws from the control panel. Do NOT disconnect control panel from wiring harness.
3. Run the remote switch's wiring harness through the opening in the back of the headstock and out through the front of the headstock.
4. Connect the remote switch's wiring harness to the back of the Push/Pull switch (refer to the electrical schematic on page 40).
5. Reinstall the control panel to the headstock. From the back of the headstock, lightly pull out any excess wire that may be inside the headstock.
6. The magnetic back on the remote switch will allow the switch to be placed anywhere on the Lathe.
7. Connect electrical power to the Lathe and resume operations.

427 New Sanford Road
LaVergne, Tennessee 37086
Phone: 800-274-6848
www.powermatic.com