

INSTALLATION AND PROGRAMMING GUIDE

1100R Series
Wireless Repeater

GET STARTED

The 1100R Series Wireless Repeater increases the wireless communication range between the receiver and transmitters. The 1100RE features 128-bit AES encryption.

Up to eight repeaters can be installed on a wireless system. The repeater is powered from a 12 VDC power supply and includes a 24-hour battery backup.

Compatibility

- All DMP 1100 Series Wireless Receivers using software Version 106 or higher
- All DMP panels with a built-in wireless receiver
- Encryption requires panel version 183 or higher and wireless receiver Version 300 or higher
- The 1100R is not compatible with the 1100T Wireless Translator

What's Included

- One 1100R Wireless Repeater
- 800 mAh Lithium Polymer Rechargeable Battery
- 376L Plug-In DC Power Supply
- Hardware pack

Procedure

To install a 1100R, this guide walks you through these required steps:

1. Program the panel.
2. Enable or disable the tamper.
3. Select a location.
4. Mount the repeater.
5. Power the repeater.

INSTALLATION

1 Program the Panel

After completing each of the following steps, press **CMD** to advance to the next option. Refer to the panel programming guide as needed.

1. Reset the panel.
2. At a keypad, enter **6653** (PROG) to access the **PROGRAMMER** menu.
3. In **ZONE INFORMATION**, enter the wireless zone number from the table below. If using multiple repeaters, they must be programmed as sequential zone numbers.

DMP PANEL	AVAILABLE ZONES	ZONE RANGES
XTLplus and XTLtouch	99	1 - 99
XT50 with built-in receiver	48	11 - 14, 21 - 24, 31 - 34, 41 - 44, 51 - 54, 61 - 64, 71 - 74, 81 - 84, 80, 85 - 99
XT30 and XT50 (1100D Series)	32	11 - 14, 21 - 24, 31 - 34, 41 - 44, 51 - 54, 61 - 64, 71 - 74, 81 - 84
XR150 (1100X Series)	100	500 - 599
XR550 (1100X Series)	500	500 - 999

4. At ***UNUSED***, enter the name of the repeater or repeater's location for easy identification later.
5. Select **AUX 1** (auxiliary 1) as the **ZONE TYPE**.
6. At **WIRELESS?** select **YES**.
7. At **SERIAL NO**, enter the repeater's eight-digit serial number.
8. At **SUPRVSN TIME**, enter a supervision time. Default is **240**.
9. At the **NEXT ZONE** prompt, select **NO** for more programming options.
10. Program **ARMED OPEN** and **DISARMED OPEN** as **TROUBLE** so that a power trouble sends a trouble alert.
11. Program **ARMED SHORT** and **DISARMED SHORT** as **ALARM** so that a tamper sends an alarm alert.
12. Press **CMD** until **STOP** displays. Press a top row select key or area to save programming.

2 Enable or Disable the Tamper

The 1100R is equipped with a case and wall tamper. When the housing cover is removed, the case tamper activates and the 1100R sends a tamper trouble to the panel when the system is disarmed, and an alarm when the system is armed.

A two-position header is provided to enable or disable the wall tamper. To enable the tamper, place the jumper on the top two pins. To disable the tamper, place the jumper on the bottom two pins.

3 Select a Location

Mount the 1100R on a wall and away from large, metal objects. Mounting on or near metal surfaces impairs performance.

The 1100R is typically mounted between the 1100 Series Wireless Receiver and the 1100 Series Wireless Transmitters that are out of range. Mount the 1100R as far from the 1100 Series Receiver as needed to provide the required system range.

Use an 1106 Universal Wireless Transmitter to determine the location of the 1100R.

The 1106 provides a Survey LED capability to allow one person to confirm communication with the wireless receiver or panel while the cover is removed.

1. Hold the 1106 in the exact desired location.
2. Press the tamper switch to send data to the panel and determine if communication is confirmed or faulty.

Confirmed: If communication is confirmed, for each press or release of the tamper switch the LED blinks immediately on and immediately off. Repeat this test to confirm five separate consecutive LED blinks. Any indication otherwise means proper communication has not been established.

Faulty: If communication is faulty, the LED remains on for about 8 seconds or flashes multiple times in quick succession. Relocate the 1106 or wireless receiver until the LED confirms clear communication.

The DMP logo LED on the 1100R will turn green indicating the signal strength of the repeater is good. If the DMP logo LED is red, the repeater should be re-located to a location that allows the logo LED to remain green.

4 Mount the Repeater

1. Remove the cover.
2. Secure the 1100R to the wall using the supplied screws in the mounting hole locations shown in Figure 2.
3. If the wall tamper is enabled, ensure a screw is placed through the 5th hole located behind the circuit board to secure the carbon spaces to the wall.

The 1100R automatically establishes communication with the receiver when it's powered up.

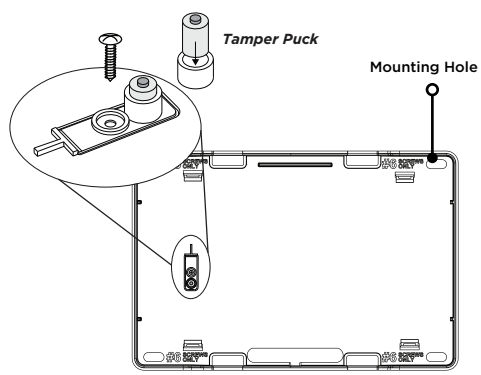

Figure 1: Inside of the 1100R Housing

5 Power the Repeater

The 1100R can be powered from a 12 VDC external power supply such as the included DMP model 376L or an optional external DC power supply such as the DMP model 505-12. In addition to powering the 1100R, the power supply also charges the back-up battery on the 1100R that should be connected at the time of the installation. If the DC power source is removed, the power failure is indicated as an open condition on the 1100R zone.

Connect a Plug-In DC Power Supply

Use the following steps to connect the model 376L plug-in DC power supply to the 1100R:

1. Connect the black wire with the white stripe to the R (red terminal) on the 1100R.
2. Connect the black wire to the B (black) terminal on the 1100R.
3. Plug the power supply into a wall outlet not controlled by a switch.

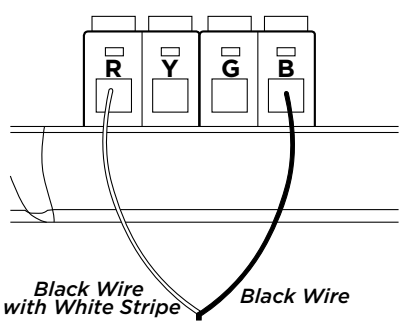

Figure 2: DC Plug-In Power Supply

Connect an External Power Supply

Observe positive and negative polarity on all connections. Using a 22 AWG wire, connect the DC power terminal block to the DC terminal on the 505-12 power supply PCB. See Figure 4.

Note: The DC plug-in power also charges the backup battery. The 376L plug-in power supply must be located within 100 feet of the repeater using the 22 AWG wire or 250 feet using 18 AWG wire.

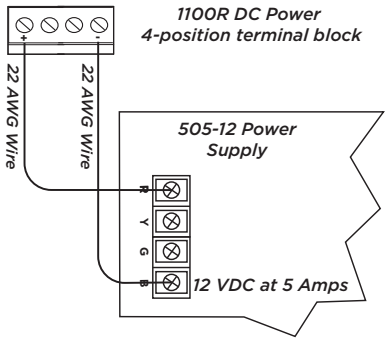

Figure 4: External Power Supply

ADDITIONAL INFORMATION

Primary Power Loss Indication

When the 1100R is used with XT Series panels, a zone trouble indication for the repeater zone occurs within three minutes of a loss of primary power.

When used with the XR150/XR550 Series panel, a power loss indication is displayed at the keypad bus as -ACPWR for the repeater zone. This occurs within three minutes but a zone trouble report to the Central Station receiver is delayed for one hour.

Replace the Backup Battery

The 1100R's rechargeable battery provides up to 24 hours of backup battery power when AC or DC power is not available. The battery is intended for backup power only. It should not operate the 1100R on a daily basis. If the battery is low, or not plugged into the battery connector, a low battery condition is indicated for the 1100R's zone.

Use only a DMP Model 1100RBAT800/8 for the 1100R backup battery. Replace the battery every three years. Use the steps below to remove and install a new 1100RBAT800/8 backup battery:

1. Remove the 1100R housing cover.
2. Disconnect the battery lead connector from the 1100R BAT header and remove the PCB from the housing.
3. Remove the battery from the double sided tape.
4. Secure the new battery on the 1100R housing with double sided sticky tape.
5. Place the PCB back in the housing and reconnect the battery lead connector to the 1100R BAT header.
6. Replace the 1100R housing cover.

LISTED COMPLIANCE SPECIFICATIONS

Commercial Fire

After all transmitters are in position, the WLS option of the panel's Walk Test must be operated and all transmitters programmed for Fire (FI) or Supervisory (SV) must show that their checkin message was received. Refer to the panel programming guide for Trip Counter for DMP Wireless check-in Test (WLS) which describes that both numbers of the counter must match. If not and a failed wireless zone is display at END, decrease that transmitters range with the receiver and perform the WLS Walk Test again.

UL 864 Section 85.2.1 Information:

- Minimum signal level needed at the receiver: -30 dBm
- Maximum ambient rf noise level: -3.7 dBm

Powering from 376L Plug-In Power Supply

When using the Model 376L Transformer for Commercial Fire installations, the 1100R must be mounted on a UL listed gangbox and connected by conduit to a Commercial Fire listed transformer enclosure.

Powering from External 12 VDC Power Supply

The 1100R is powered from a 12 VDC power supply such as a DMP Model 505-12. In addition to powering the repeater, the power supply also charges the back-up battery of the repeater. If the DC power source is removed, the power failure is indicated as an open condition on the repeater zone.

SPECIFICATIONS

Operating Temperature	32°F - 120°F
Primary Operating Voltage	12 VDC, 30 mA
Standby Battery	1100RBAT800/8
Voltage	3.7 VDC
Capacity	800 mAh
Type	Lithium Polymer, rechargeable
Standby	24 hours
Frequency Range	905-924 MHz
Dimensions	5.5" W x 3.75" H x 1" D
Color	White
Housing Material	Flame Retardant ABS

Accessories

1100RBAT800/8	Replacement Rechargeable Battery (8 pack)
505-12	12 VDC Power Supply
376L	Plug-In DC Power Supply

Ordering Information

1100R-W	Standard Wireless Repeater
1100RE-W	Encrypted Wireless Repeater

Patents

- U.S. Patent No. 7, 239, 236

Certifications

- California State Fire Marshal (CSFM)
- FCC Part 15 Registration ID: CCKPCO114R6
  CCKPC0245
- Industry Canada: 5251A-PC0114R6
  5251A-PC0245
- New York City (FDNY)

Underwriters Laboratory (UL) Listed

ANSI/UL 365	Police Station Connected Burglar
ANSI/UL 609	Local Burglar Alarm Units and Systems
ANSI/UL 1023	Household Burglar Alarm System Units
ANSI/UL 1076	Proprietary Burglar Alarm Units
ANSI/UL 1610	Central Station Burglar Alarm Units
ANSI/UL 985	Household Fire Warning System
ANSI/UL 864	Fire Protective Signaling Systems

Compatible With Devices Listed For

- ANSI/UL 634 Connections and Switches for use with Burglar Alarm Systems Accessory
- ANSI/UL 639 Intrusion Detections Units Accessory

FCC Information

This device complies with Part 15 of the FCC Rules. Operation is subject to the following two conditions:

1. This device may not cause harmful interference, and
2. This device must accept any interference received, including interference that may cause undesired operation.

Changes or modifications made by the user and not expressly approved by the party responsible for compliance could void the user's authority to operate the equipment.

Note: This equipment has been tested and found to comply with the limits for a Class B digital device, pursuant to part 15 of the FCC Rules. These limits are designed to provide reasonable protection against harmful interference in a residential installation. This equipment generates, uses and can radiate radio frequency energy and, if not installed and used in accordance with the instructions, may cause harmful interference to radio communications. However, there is no guarantee that interference will not occur in a particular installation. If this equipment does cause harmful interference to radio or television reception, which can be determined by turning the equipment off and on, the user is encouraged to try to correct the interference by one or more of the following measures:

- Reorient or relocate the receiving antenna.
- Increase the separation between the equipment and receiver.
- Connect the equipment into an outlet on a circuit different from that to which the receiver is connected.
- Consult the dealer or an experienced radio/TV technician for help.

Industry Canada Information

This device complies with Industry Canada License-exempt RSS standard(s). Operation is subject to the following two conditions:

1. This device may not cause interference, and
2. This device must accept any interference, including interference that may cause undesired operation of the device.

Le présent appareil est conforme aux CNR d'Industrie Canada applicables aux appareils radio exempts de licence. L'exploitation est autorisée aux deux conditions suivantes:

1. l'appareil ne doit pas produire de brouillage, et
2. l'utilisateur de l'appareil doit accepter tout brouillage radioélectrique subi, même si le brouillage est susceptible d'en compromettre le fonctionnement.

Designed, engineered, and manufactured in Springfield, MO using U.S. and global components.

LT-1824 1.02 23234

© 2023

INTRUSION • FIRE • ACCESS • NETWORKS

2500 North Partnership Boulevard
Springfield, Missouri 65803-8877

800.641.4282 | DMP.com