Phone: 800-669-1303 or 801-561-0303
Fax: 801-255-2312
Email: treborservice@idexcorp.com

EVOLVE 55E PUMP

Operation / Maintenance Manual



http://www.treborintl.com

CONTENTS

1 INSTALLATION 3
1.1 UNPACKING 3
1.2 UTILITIES / CONNECTION 3
1.3 OPTIONAL END-OF-STROKE PROBE INSTALLATION 5
1.4 REMOTE EXHAUST CONNECTION 5
2 OPTIONS 7
2.1 FLUID PORT CONNECTION OPTIONS 7
2.2 FLUID FITTINGS / SURGE SUPPRESSOR CONNECTION 7
2.3 OPTIONAL LEAK SENSING 8
2.3.a Installation 8
2.3.b Sensor Signal Specifications 8
3 START-UP 10
3.1 PERFORMANCE CHARTS 10
4 MAINTENANCE 13
4.1 PREVENTIVE MAINTENANCE SCHEDULE 13
4.1.a Preventive Maintenance Record 14
4.2 RECOMMENDED SPARE PARTS 15
4.3 TOOLS 15
4.4 PARTS ILLUSTRATION 16
4.5 PARTS LIST 17
4.6 CLEAN-UP 17
4.7 DISASSEMBLY 18
4.7.a Head Removal 18
4.7.b Body Disassembly 19
4.7.c Control Base Disassembly 19
4.7.d Pump Cleaning 19
4.8 ASSEMBLY 19
4.8.a Control Base Assembly 20
4.8.b Body Assembly 21
4.8.c Head and Body Assembly 22
4.8.d Final Assembly 22
4.9 TESTING 24
4.9.a Performance Test 24
4.9.b Pump Drying Procedure 24
4.9.c Dry Suction Test 24
5 TROUBLESHOOTING 25
6 WARRANTY 26
7 CONTACT INFORMATION 28
7.1 GENERAL CONTACT INFORMATION 28
7.2 TECHNICAL SUPPORT 28
7.3 REGIONAL REPRESENTATIVES 28

1 INSTALLATION

1.1 UNPACKING

After unpacking, the pump should be checked for any damage that may have occurred during shipment. Damage should be reported to the carrier immediately.

Although extensive efforts are made to deliver pumps to our customers completely dry, new pumps may contain residual moisture from their final DI water test.

The following items should be included within the shipping container:

Qty	Item	Description
1	Pump	Evolve 55E Pump
1	ME55E	Operation/Maintenance Manual

1.2 DAMPER PORT TORQUE INSPECTION

The Damper Port Plug on the pump is torqued before leaving the factory. However, relaxation may occur due to handling, material creep, or other unforeseen events. Trebor recommends that Damper Port be torqued upon pump install. The following procedure should be used.

1. Do Not remove Damper Port Plug. (Replace seals if Damper Port is removed).
2. Torque the Damper Port Plug to 50 in-lbs using 3/4" pin tool and a torque wrench.

1.3 UTILITIES / CONNECTION

It is recommended that the pump be positioned within 15° from level to maintain self-priming ability and pumping efficiency. Allow sufficient room for tubing connectors. The pump mounts on a quick-change base for easy installation.

The pump has dual exhaust locations on the backside of the base. The exhaust locations require 1/2" (12mm) minimum clearance behind the control base. Care should be taken to elevate the pump whenever possible to help prevent flooding when the pump is located in a wet bench plenum. For remote exhaust connection, see Section 1.4.

Air Inlet: 1/4" FNPT (3/8" Dia. [8mm] supply tube minimum).

Air Supply: 20-100 psig (.14 - .69 MPa) clean dry air or nitrogen (see Performance Charts, Section 3.1).

Fluid Ports: Inlet/Outlet fluid fittings and surge suppressor require torqueing during pump installation. See Section 2 for connection diagram and torque values.

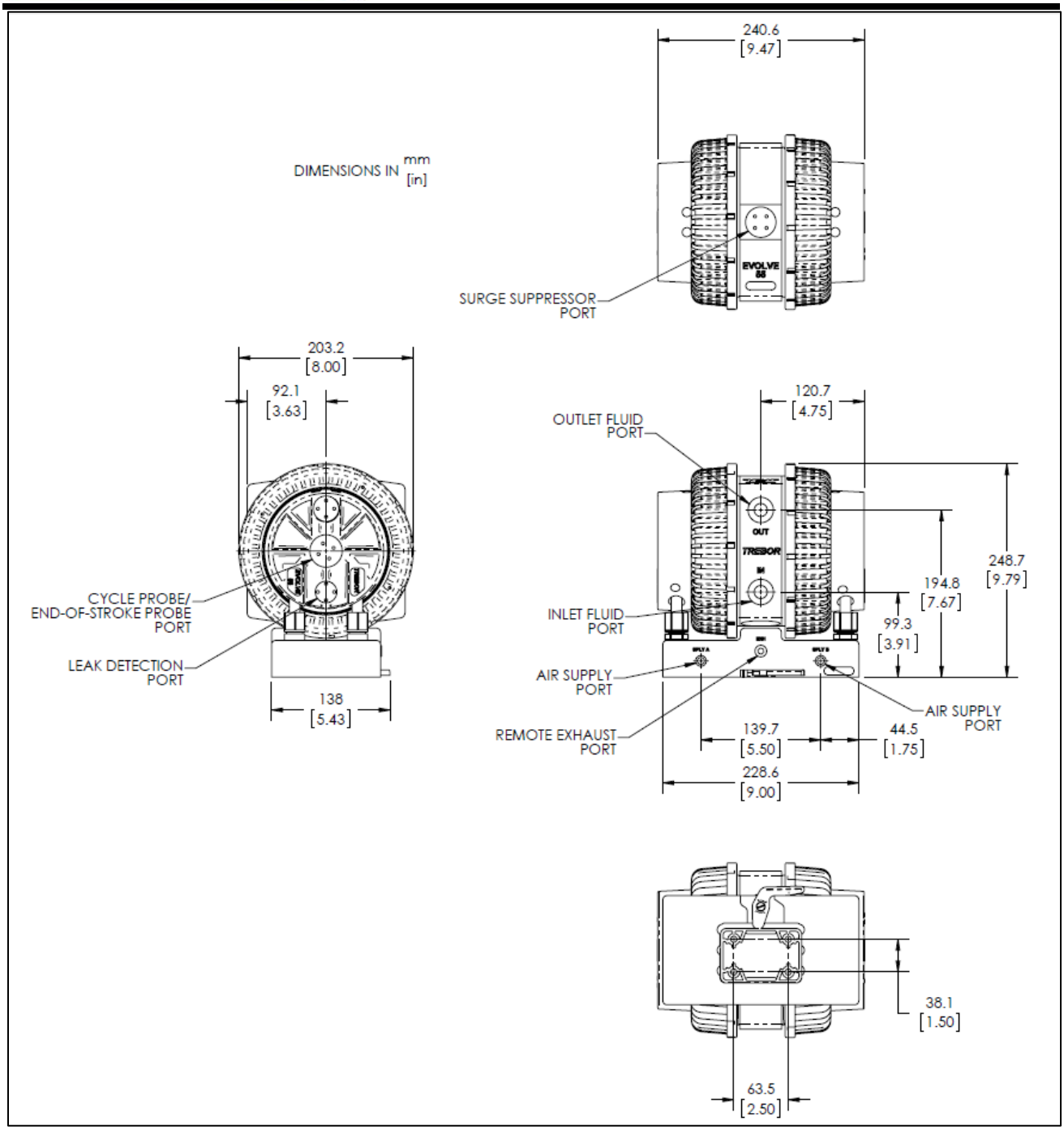

Figure 1-1: Dimensional Views

ATTENTION: The pump should be operated with clean, dry air or nitrogen. Particulate, water, and oils in the air supply can damage the pump.

NOTE:

It is recommended that a filter be placed on the discharge side of the pump.

1.4 OPTIONAL END-OF-STROKE PROBE INSTALLATION

Optic Cable: 1mm core; 1/4" PFA protective tubing.

- Install seal into head.
- Install probe assembly into head.
- Thread probe cap into head hand tight only. No tool needed.
- Connect fiber optic cable to sensor. NOTE: Minimize bends in fiber optic cable to 2" radius minimum to help ensure optimum signal strength.

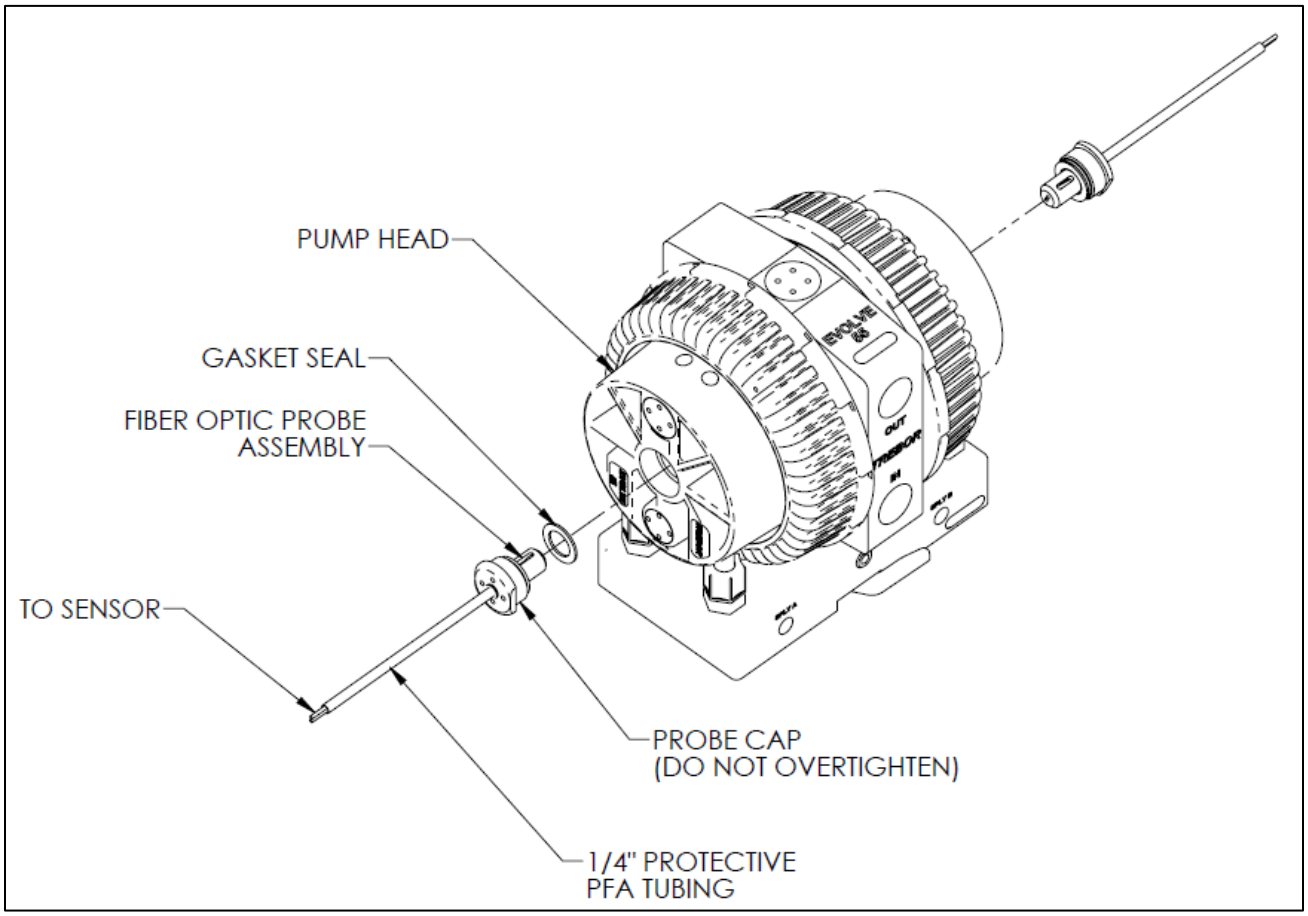

Figure 1-2: End-of-Stroke Sensor Installation

1.5 REMOTE EXHAUST CONNECTION

Some installations may benefit from remotely exhausting air from the pump to eliminate unwanted air turbulence or to prevent potentially damaging chemical vapors from entering the pump air cavities.

- Remove existing Muffler Assemblies from the pump base.
- Replace Muffler Assemblies with Exhaust Plug
- Remove Pipe Plug (¼" NPT) from the pump base. Install the appropriately sized fitting and tubing (not provided) to remote exhaust.

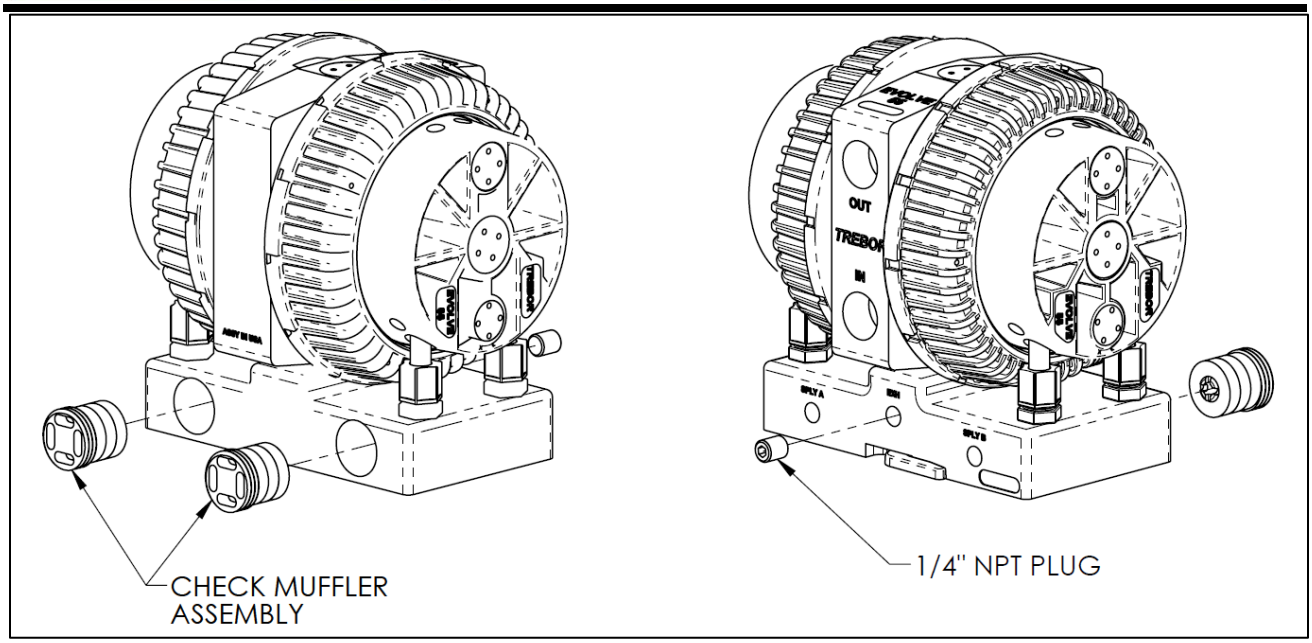

Figure 1-3: Remote Exhaust Connection

NOTE: To maintain optimum pump performance use 3/8” (8mm) tubing minimum at a length of 10 ft. (3 meters) maximum.

2 OPTIONS

2.1 FLUID PORT CONNECTION OPTIONS

NOTE 1: Use O-ring to seal stainless steel or other rigid plumbing.

Available Options

A) Perlast O-Ring Adapter

B) PTFE Gasket Adapter

The Evolve 55 pump uses molded ultrapure PFA fluid port adapters. Two types of adapters are available: one with a Perlast o-ring and one using a PTFE gasket. Both adapters end in a ¾" pipe. The adapter can be ordered with a standard pipe or tube fitting (see below for options) or can be customized to fit any facility piping. Figure 2-1 shows the fluid port adapters

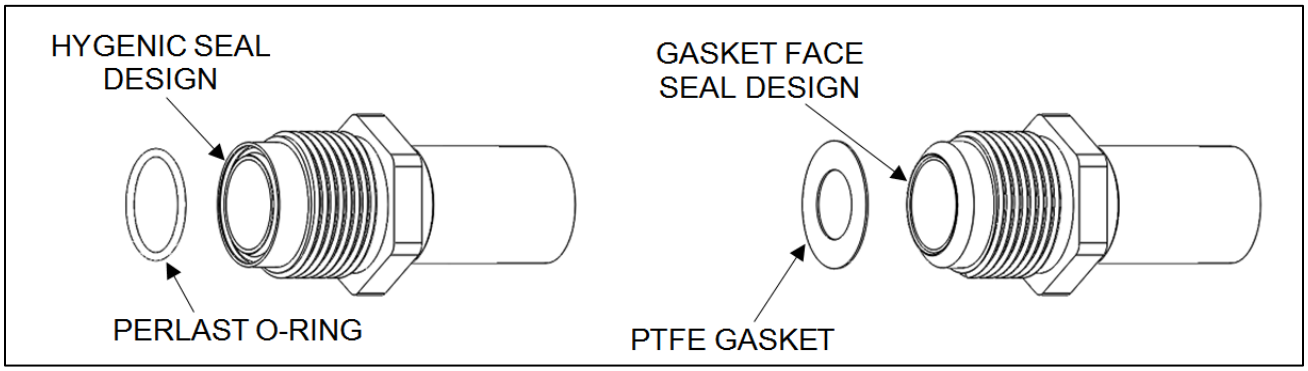

Figure 2-1: Perlast O-ring and PTFE Gasket Fluid Port Adapters

Available Pipe Connection Fittings:

- ¾" Pipe Stubout
- ¾" Tube Stubout
- ½" Flare Fitting
- ¾" Flare Fitting
- 1" Flare Fitting
- ¾" Pillar Fitting
- ¾" Female NPT Fitting

These fittings can be ordered with either the Perlast O-ring adapter or the PTFE Gasket adapter. If additional pipe fitting types are needed, contact your sales associate. Custom configurations are available to adapt the Evolve 55 to any facility configuration.

2.2 FLUID FITTINGS / SURGE SUPPRESSOR CONNECTION

Surge Suppressor	Assembled Height: mm (IN)
MODEL SS40	373 (14.7)
MODEL SS85	435 (17.1)
MODEL SS95	356 (14.0)

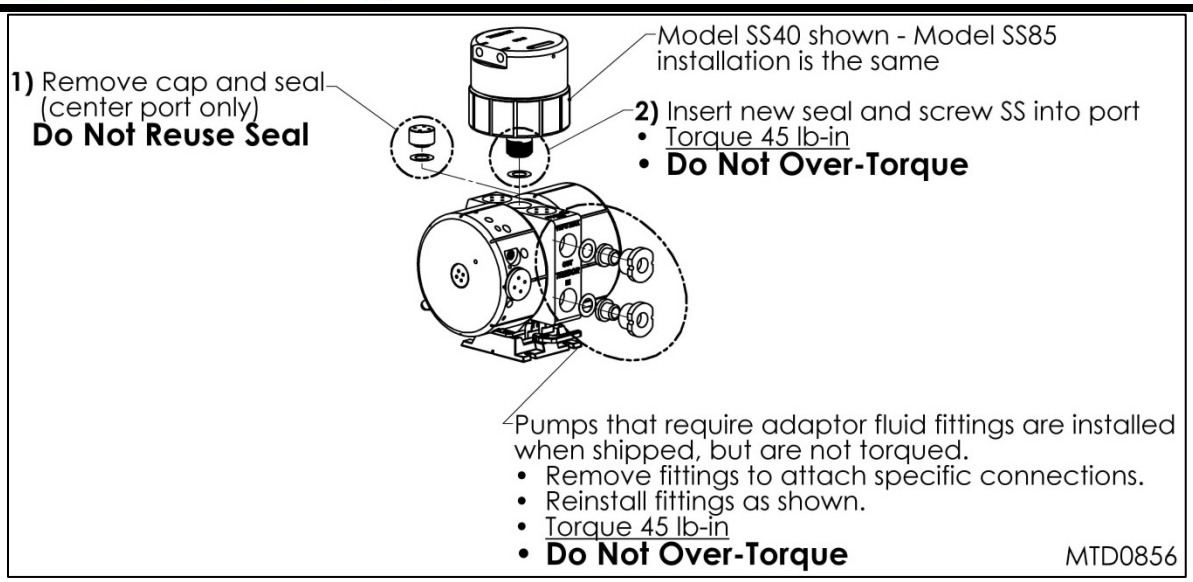

Figure 2-2: Generic Connection Diagram

NOTE: See Surge Suppressor Operation Manual for detailed installation instructions.

2.3 OPTIONAL LEAK SENSING

2.3.a Installation

- Remove plug and seal from port. Probe is self-sealing.
- Install probe assembly into leak sensor port.
- Thread probe cap into port. (NOTE: Do not over tighten; damage to threads will occur.)
- Push protective tubing into probe cap.
- Connect fiber optic cable to sensor (NOTE: Minimize bends in fiber optic cable to 2" radius minimum to help ensure optimum signal strength.) Fiber optic cable can be cut to desired length using the cable cutter provided.

2.3.b Sensor Signal Specifications

- The sensor signal is normally closed. In the event of a leak, no light signal is returned to the sensor.

NOTE: See your fiber optic sensor installation instructions for proper connection and adjustment.

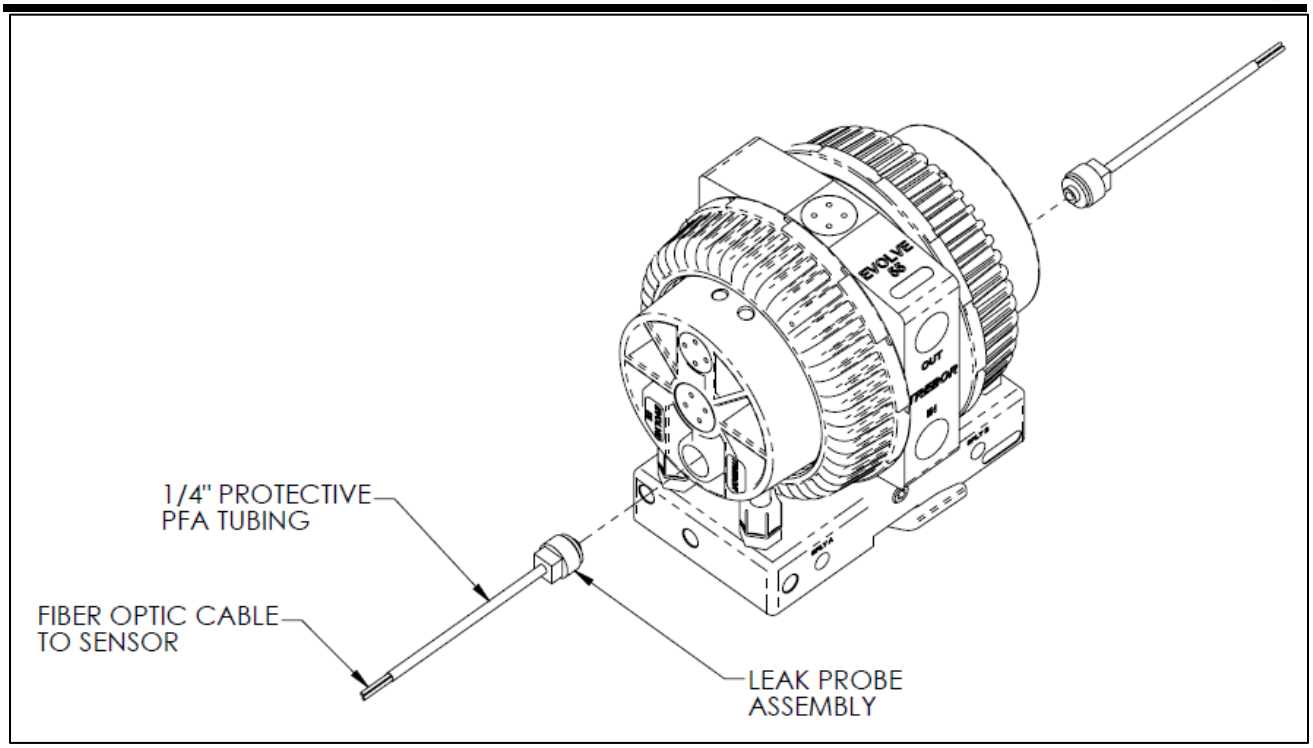

Figure 2-3: Leak Probe Assembly

3 START-UP

- Pump air supply pressure must be regulated. (See Figure 3-2: Pressure vs. Fluid Temperature Chart.)
- Open the fluid suction (IN) line valve, if necessary.
- Open the fluid discharge (OUT) line valve, if necessary.
- Program external control to desired settings
- Start slowly with air regulator at low (> 20 psi) pressure setting. Increase pressure to attain desired flow, up to the maximum rating (See Section 3.1).
- Refer to Troubleshooting, Section 5, if pump fails to start.

ATTENTION: Prolonged periods (> 5 minutes) of dry running can damage critical internal pump parts.



CAUTION: When handling potentially dangerous fluids under pressure, the pump and its fittings should be placed in an enclosure away from operators.

3.1 PERFORMANCE CHARTS

Pumping capacity is a function of air supply pressure and volume, suction head, suction line restrictions, discharge head, discharge line restriction, and fluid specific gravity and viscosity.

NOTE: The following chart is for specification to be used to size system.

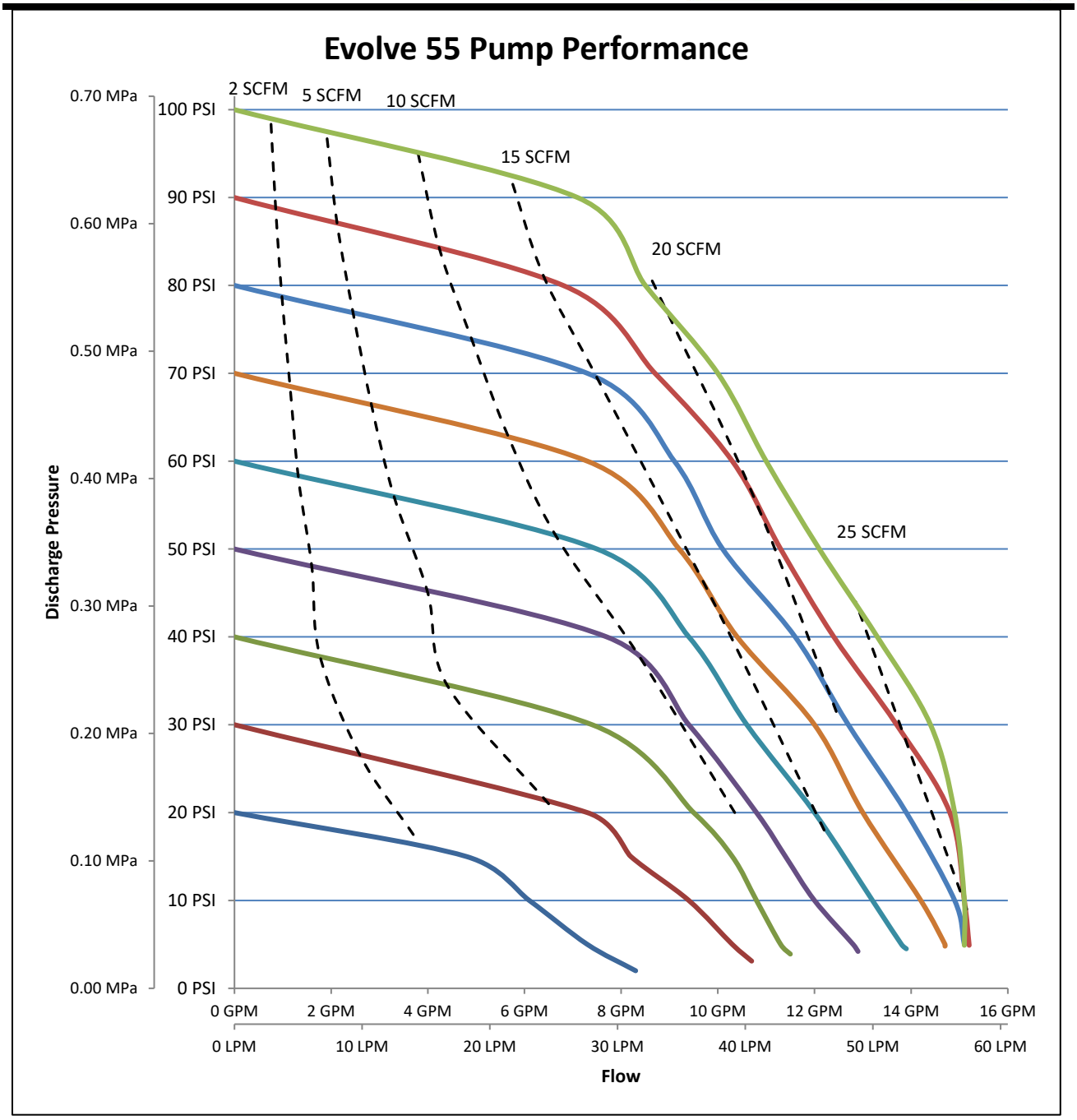

Figure 3-1: Pump Performance Curves with Air Consumption

NOTE: Test information is based on specific conditions and limited sampling. Use for general reference only.

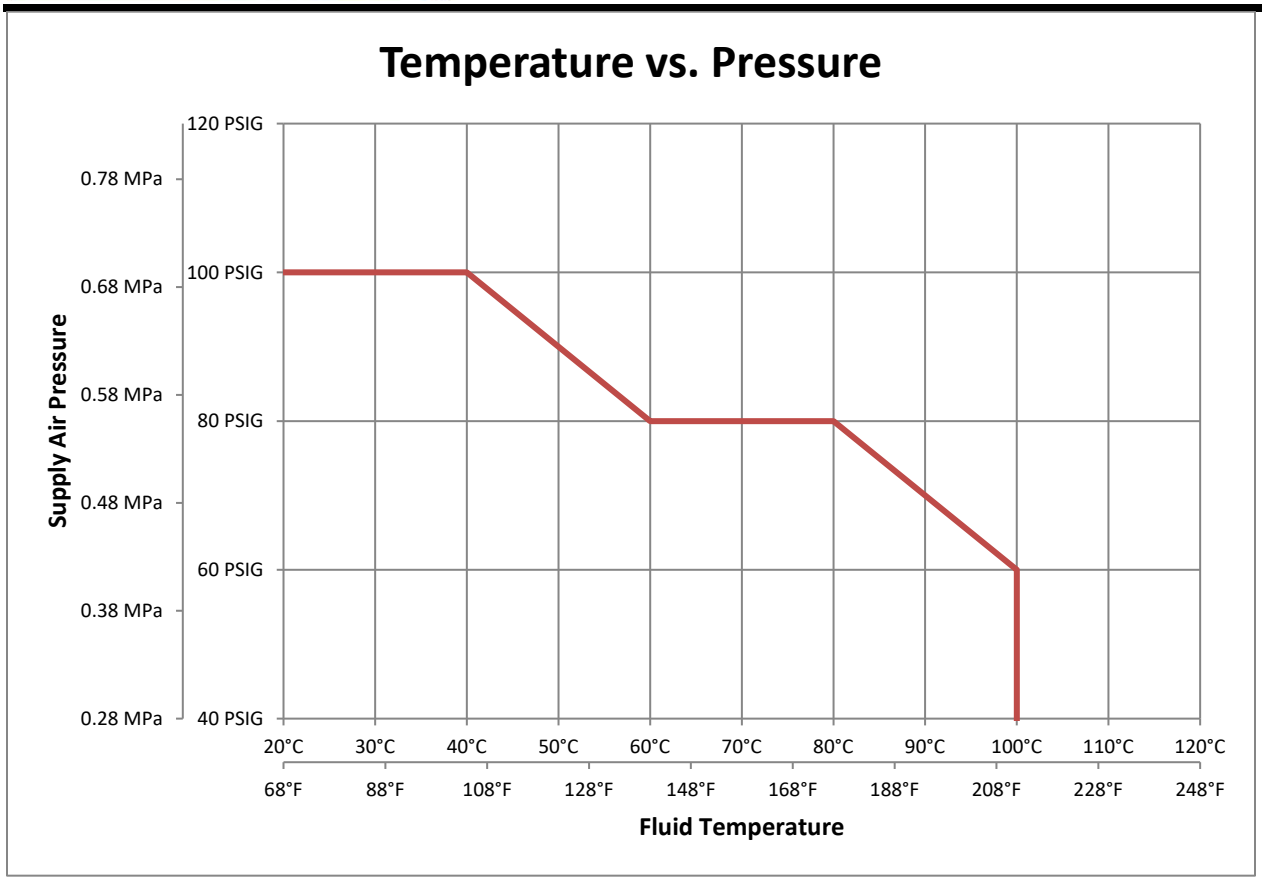

Figure 3-2: Pressure vs. Fluid Temperature Chart
Recommended Maximum Pump Operating Levels

NOTE:

1. The above graphs are not representative of all operating conditions – field application results may vary.
2. Be sure that fittings and tubing used are capable of operating conditions.

Noise level while operating is approximately 80 dB

4 MAINTENANCE

Trebor pump maintenance can be divided into two categories: air system maintenance and fluid system maintenance. The purpose of air system maintenance is to prevent air system failures such as stalling or erratic cycling. The purpose of fluid system maintenance is to maintain suction and lift capabilities.

Pump Rebuild Service

Trebor International provides a factory rebuild service for customers using Trebor products. Trebor will rebuild any standard pump (exclusive of options). Please contact Trebor International Sales Department for current rebuild pricing. The fixed rebuild price includes a factory rebuild and parts equivalent to the standard rebuild kit. Each factory rebuild comes with a new one-year warranty. Repairs requiring more extensive part replacements will be quoted prior to proceeding with the pump rebuild. If the pump has exceeded its useful life and cannot be rebuilt, the customer may elect to purchase a new Trebor pump. If the customer chooses not to rebuild or replace the pump, an evaluation charge will be required.

All returned pumps are to be shipped freight prepaid with a valid Purchase Order for the cost of rebuild service. Please contact Trebor International prior to returning your pump to obtain an RMA Number and Pump Return Data Sheet to ensure proper safety precautions. Each pump will be evaluated and repaired within 5 working days of the receipt of pump at Trebor facility.

4.1 PREVENTIVE MAINTENANCE SCHEDULE

The following maintenance schedule is recommended to optimize pump performance and minimize failures. Certain operating conditions that require more frequent maintenance intervals have been noted. In positive pressure inlet conditions where suction or lift is not required, fluid system maintenance may be extended.

Adhering to the recommended preventative maintenance schedule along with periodic inspection of the pump will ensure continued efficient operation and overall reliable pump performance.

It is recommended that the Preventive Maintenance Record (Section 4.1.a) be copied, maintained, and kept with this unit for future reference.

EVOLVE 55D Maintenance Schedule

	Install	30 Days	3 Months	6 Months	9 Months	12 Months	15 Months	18 Months	21 Months	24 Months
Quick Exhaust Seal										R
Muffler Media										R
Shaft Seal and Shaft										R
Check Balls and O-Rings										R
Diaphragms										R
Check Plug Seal										R
Suction and Discharge Check Cage										I
I=Inspect, R=Replace										

4.1.a Preventive Maintenance Record

Company Name: _____

Company Address: _____

_____

Product: EVOLVE 55E Serial Number: _____

Date: _____ Tech: _____ Notes: _____

Date: _____ Tech: _____ Notes: _____

Date: _____ Tech: _____ Notes

4.2 RECOMMENDED SPARE PARTS

KRE55E-00-A Spares Rebuild Kit, which includes:

Part No	Qty	Description			
KME55E-00-A	1	**Maintenance Kit**			
		Includes:	(2)	98003047	Quick Exhaust Seal
			(2)	1900B0016	Quick Exhaust Port
			(2)	AK205	Muffler Assembly
KDE55E-00-A	1	**Diaphragm Kit**			
		Includes:	(4)	BK019	Diaphragm
			(2)	W0151	Fiber Optic Target
98001415	4	PTFE Check Ball			
98002334	4	PTFE O-ring			
98003079	2	Shaft Seal			
BK032	1	Shaft			
AK153	2	Check Cap Seal			
AM084	1	Damper Port Seal			
W0116	2	Exhaust Port Gasket			
AM020	2	Top Pilot Port Gasket			
AK120	2	Bottom Pilot Port Gasket			
AM037	2	Leak Port Gasket			
BK009	16	Diaphragm Retention Pin, PP			

4.3 TOOLS

The following tool kit is recommended as standard service equipment.

KTE55-00-A Tool Kit, which includes:

Part No	Qty	Description
98003108	1	Torque Wrench, 30-150 ft.-lbs., 1/2” Drive Handle
98003150	1	Tool Case
98003305	1	Drive Handle
98003306	1	Wrench, Adj., 15/16”
T0126	1	Tool, Shaft Insert
T0132	1	Rebuild Fixture
T0146	1	Tool, Pin, 3/4x1/4 Drive
T0147	1	Tool, Pin, 1x1/4 Drive
T0148	1	Tool, Pin, 1/2x1/4 Drive
T0149	1	Tool, Pin, Optic Cap, 3/4
T0174	1	Evolve 55 Torque Tool
T0175	1	Diaphragm Pin Tool

NOTE: If the optional AK003-01 (PVDF Union Nut) is chosen, tool T0129 is recommended for standard service equipment disassembly.

4.4 PARTS ILLUSTRATION

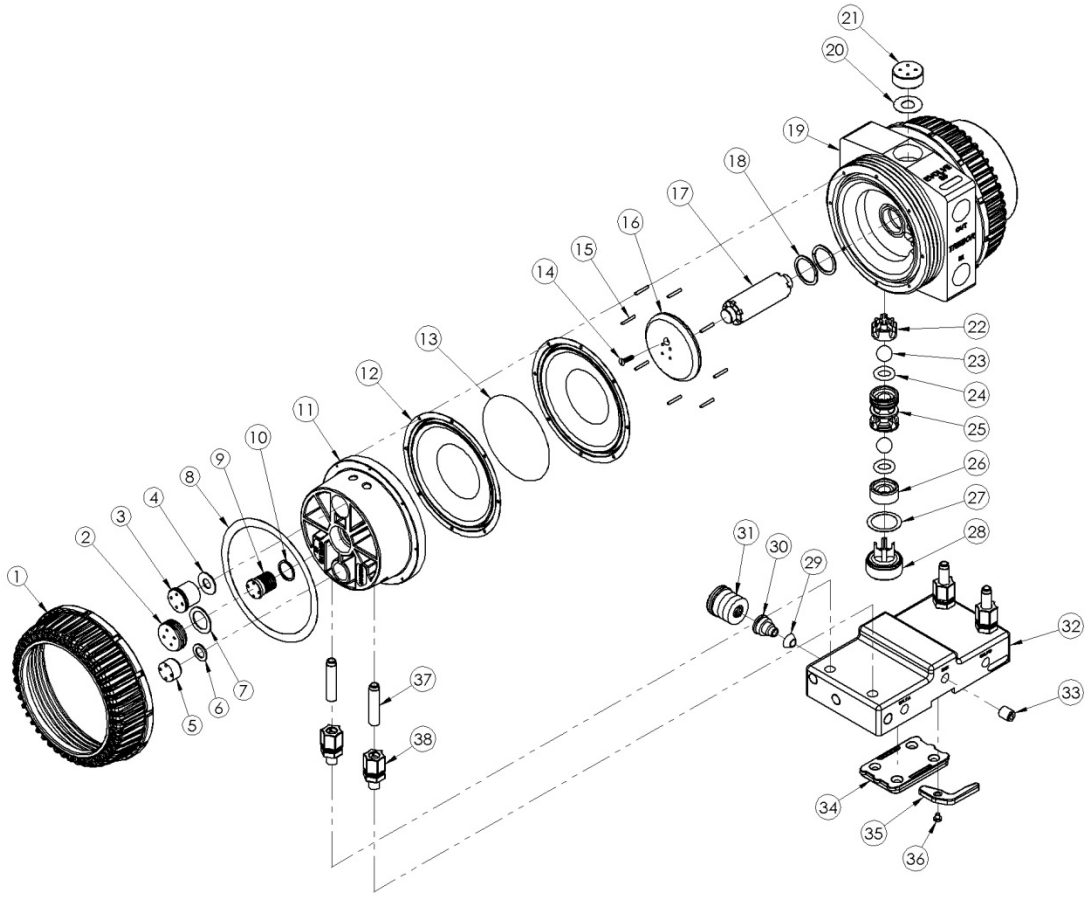

Figure 4-1: Evolve 55E Itemized Parts

4.5 PARTS LIST

ILL NO	PART NO	QTY	DESCRIPTION	PM YEAR #	MATERIAL
1	BK005	2	Union Nut		GFPP
1	AK003-01	2	PVDF Union Nut (optional – not shown)		PVDF
2	BK026	2	Top Pilot Port Plug		PP
3	BK027	2	Exhaust Port Plug		PP
4	W0116	2	Exhaust Port Gasket		PTFE
5	AM035	2	Leak Port Plug		PP
6	AM037	2	Leak Port Gasket		PTFE
7	AM020	2	Top Pilot Port Gasket		PTFE
8	AK097	2	PTFE Slip Ring		PTFE
9	BK025	2	Bottom Pilot Port Plug		PP
10	AK120	2	Bottom Pilot Port Gasket		PTFE
11	BK004	2	Pump Head		PP
12	BK019	4	Diaphragm	2	PTFE
13	W0151	2	Fiber Optic Target	2	PTFE
14	98003911	2	Flathead Screw (#10-24X3/4)		PTFE
15	BK009	16	Polypropylene Pin		PP
16	BK033	2	Push Plate		PTFE
17	BK032	1	Shaft	2	PFA
18	98003079	2	Shaft Seal	2	PTFE
19	BK001	1	Pump Body		PTFE
20	AM084	1	Damper Port Gasket		PTFE
21	AM075	1	Damper Port Plug		PTFE
22	AK026	2	Discharge Check Cage		PTFE
23	98001415	4	Check Ball	2	PTFE
24	98002334	4	O-ring	2	PTFE
25	AK068	2	Suction Check Cage		PTFE
26	AK066	2	Suction Check Seat		PTFE
27	AK153	2	Check Bore Gasket	2	PTFE
28	AK149	2	Check Bore Plug		PTFE
29	98003047	2	Quick Exhaust Seal	1 & 2	Viton
30	1900B0016	2	Quick Exhaust Port	1 & 2	UHMW
31	AK205	2	Muffler Assembly	1 & 2	PP
32	BK028	1	External Control Base		PP
33	98003080	1	1/4” NPT Plug		PP
34	AK088	1	Base Attachment Plate		PP
35	AK108	1	Lever		PP
36	98003071	1	Lever Attachment Screw		PP
37	AK182	4	Transfer Tube		PFA
38	98003260	4	Jaco Fitting		PP

4.6 CLEAN-UP

To help remove potentially dangerous chemicals prior to service or shipment, the pump should be flushed with DI water or disassembled and thoroughly cleaned. Allow DI water to flush through the inlet and out the outlet to prevent pressure build up.



CAUTION: When handling pump, wear appropriate personal protection gear, including safety glasses.

4.7 DISASSEMBLY

During the life of the pump, it will be necessary to perform certain preventative maintenance procedures to ensure its continued high performance. This section and the next (4.8 assembly) are provided for the user's convenience in disassembly and re-assembly procedures.

4.7.a Head Removal

- Loosen quick grip nuts on the transfer tubes from the Jaco fittings in the base using 13/16" open-end wrench.
- Remove pump assembly from the pump control base.
- Immerse or flush the pump assembly using DI water and a neutralizing agent.
- Install mounting fittings in pump fluid adapter ports and lock body into bench mounting fixture. **NOTE: Securely attach mounting fixture to work surface using hardware provided.**

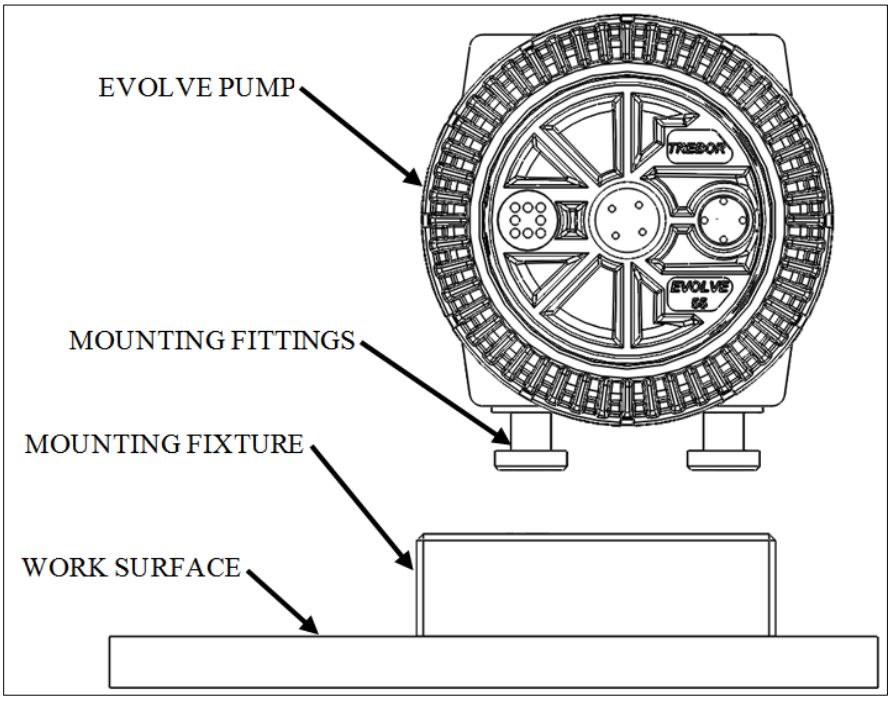

Figure 4-2: Pump and Mounting Fixture

- Remove the transfer tubes from pump heads (using latex gloves to assist grip).
- Remove the leak port plug and seal
- Remove the top and bottom pilot plugs and seals
- Remove the exhaust port plug and seal
- Using the torque tool, turn the union nuts counter-clockwise to remove.
- Remove head and check diaphragms for cracks or cuts.
- To remove diaphragms, slit diaphragm with a sharp knife and pull the diaphragms from the grooves. (Do not pry on diaphragm seal groove, as this will damage the sealing surface.)

CAUTION: Following disassembly, parts should be thoroughly washed to be free from chemical residue for handling purposes.

4.7.b Body Disassembly

- Remove flat head screw from push plate
- Unscrew push plate from the shaft in a counter-clockwise direction. Pull other push plate and shaft from pump body.
- Remove suction plugs and seal on bottom of pump body using 1” pin tool.
- Remove suction seat using 1” pin tool.
- Remove ball and O-ring.
- Unscrew suction check using 1” pin tool turning it counter-clockwise.
- Remove second set of O-rings and balls and pull out discharge check cage.
- Remove shaft seals from pump shaft seal groove in the center of the shaft bore using the tip of a razor knife. Take care not to damage the shaft bore. NOTE: Do not reuse seals.
- Remove damper plug and seal using 3/4” pin tool.

4.7.c Control Base Disassembly

- Unlock control base from quick-change mount by pulling out lever on front of base to unlock mount. Then slide base back until it stops. Lift base off mount.
- Using pH test strips evaluate whether base has any contamination in air passages, especially the muffler area. If present, neutralize using best methods prior to disassembly.
- Unscrew and loosen Jaco nut until transfer tubes can be removed. Do not remove the Jaco fitting from the base unless the fitting is damaged.
- Unscrew and remove muffler assemblies from base using the 1”pin tool.
- Remove the quick exhaust port using the 1/2” pin tool.
- Remove the quick exhaust seal. If needed, apply low-pressure air to each air supply port to aid in seal removal.

4.7.d Pump Cleaning

- Gently spray clean with DI water, or rinse by dunking all components in DI water, to remove any trace materials remaining after disassembly.

4.8 ASSEMBLY

Prior to beginning assembly, inspect all parts to ensure they are clean and dry. Wear clean protective gloves. Precautions should be exercised to prevent contaminating any of the air chamber surfaces with chemicals during handling.

4.8.a Control Base Assembly

- **Perform this step only if the Jaco fitting was removed during disassembly.** Inspect Jaco fittings for damage. If damaged replace with black polypropylene Jaco Fittings (Jaco Part No. 10-8-4-P-PG. These parts can be ordered from Trebor or purchased separately)
- **Perform this step only if the Jaco fitting was removed during disassembly.** Apply PTFE thread tape to the NPT threads on the Jaco fittings. Do not tape more than ½ of the threads. Thread the fittings into pump base - depth is .08 inch from bottom of wrench hex to top of pump base as shown. See Figure 4-3. Loosen the nut.

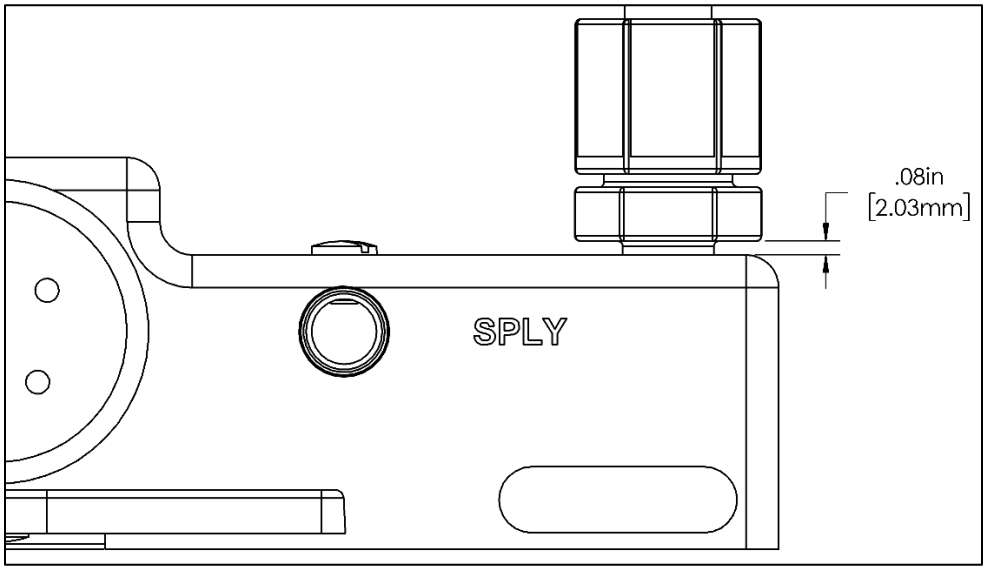

Figure 4-3: Jaco Fitting Final Position

- Insert the Quick Exhaust Seal into the bottom of the muffler port. See
- Thread the Quick Exhaust Port into the port. Torque to 20 in-lbs. using the 1/2” pin tool.

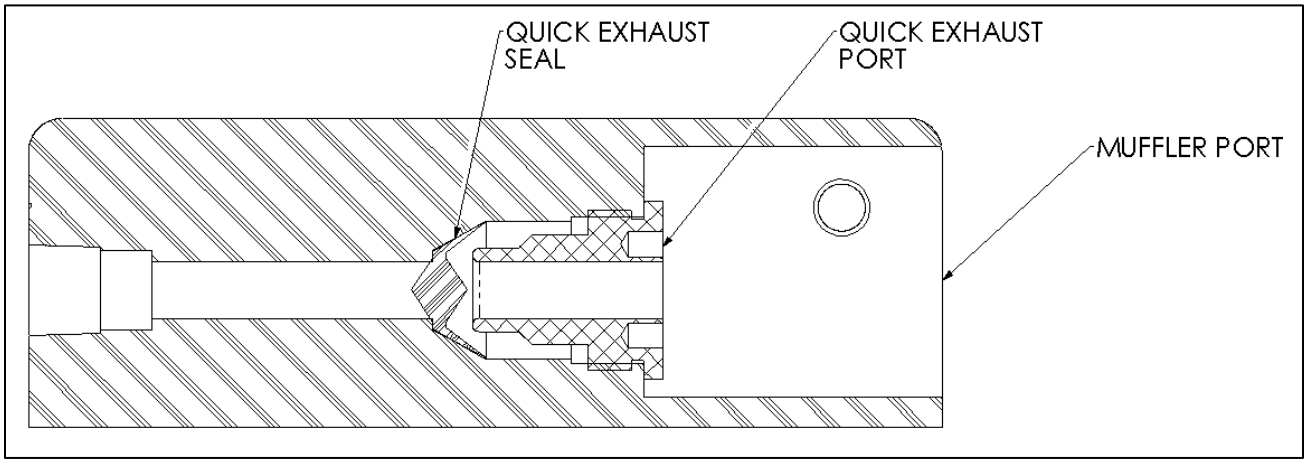

Figure 4-4: Quick Exhaust Port Assembly

- Thread muffler assemblies into base using 1” pin tool. Tighten until muffler assembly is flush with control base.

4.8.b Body Assembly

- Install seal and damper plug into body using 3/4” pin tool, torque to 50in-lbs.
- Remove pump from assembly fixture.
- Turn pump upside down to access check bores.
- Install discharge check cage into bore making sure small end fits into relief in bottom of bore.
- Drop ball into check cage, then O-ring.
- Install suction sleeve into the bore; tighten using 1” pin tool. Tighten until engagement with O-ring is achieved, then unthread the sleeve to align the slots in the sleeve with the slots on the body. Do not over tighten as damage may occur.
- Install second ball into check cage, then O-ring.
- Install suction seat using the 1” pin tool. Tighten until engagement with O-ring is achieved, then unthread just enough to ensure the O-ring is free to move.
- Install check seal onto check bore shoulder and thread suction plug into bore using 1” pin tool, torque to 60in-lbs.
- Repeat for the second bore.
- Install two shaft seals in shaft bore groove with slits 180° apart.
- Thread one push plate onto shaft until push plate bottoms out on shaft shoulder.
- Tighten push plate to 48 oz-in, and then rotate CW until locking screw hole is aligned with the next available hole in shaft. The first push plate can be visually aligned separate from the body.
- Install push plate locking screw. Tighten to 12 oz-in.
- Thread shaft onto shaft insert tool and insert shaft into bore. See Figure 4-5. This prevents damage to the TFE shaft seals and prevents dislodgement of shaft seals.

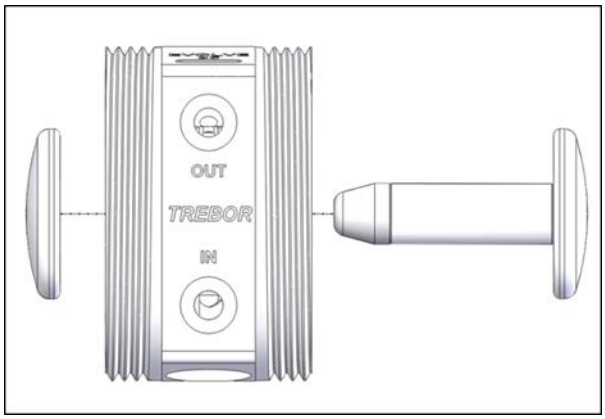

Figure 4-5: Shaft Insert Diagram with Tool

- Insert shaft through shaft bore as shown
- Thread remaining push plate until push plate bottoms out on shaft shoulder.

- The second push plate, while in the pump body, cannot be visually aligned. Tighten push plate to 48 oz-in, then insert alignment pin into locking screw hole. Rotate push plate CW until locking screw hole is aligned with the next available hole in shaft and alignment pin drops into the shaft hole. Remove alignment pin.
- Install push plate locking screw. Tighten to 12 oz-in.

4.8.c Head and Body Assembly

- Install the mounting fittings in the pump fluid adapter ports
- Thread union nut on one side hand tight. Do not install head or diaphragm at this point. This will protect body during initial pump assembly.
- Place pump body with the union nut on the table.
- Place one head on the table with the air chamber facing up.
- Insert 8 PP pins into the 8 small holes around the circumference of the main seal.
- Place the white fiber optic target between and centered between two diaphragms.
- Place the diaphragms onto the body, ensuring that the PP pins pass through all 8 holes in both diaphragms.
- While holding the diaphragms in place, lift the pump head and place it on the pump body. Ensure the transfer tube port openings are directed toward the bottom of the pump. Fit all 8 PP pins into the holes in the pump head.
- While holding the pump head in place, position the slip ring onto the pump head
- Thread the union nut onto the pump body and tighten by hand.
- Turn the pump body over and remove the union nut.
- Repeat the process of installing the diaphragms over the PP pins on the body and attach the head to the body with the second union nut.
- Using the torque tool and the torque wrench, tighten the union nuts slowly to 125 ft.-lbs. Repeat for the second union nut.

4.8.d Final Assembly

- For the following instructions, see Figure 4-6 for port locations and top/bottom alignments.
- Insert the Bottom Pilot Port Gasket into the center hole. Thread the Bottom Pilot Port Plug into the hole. Apply 35 in-lbs. with the pin tool.
- Insert the top pilot port gasket into the center hole. Thread the top pilot port plug into the hole. Apply 40 in-lbs. with pin tool.
- Insert Exhaust Port Gasket into the top hole. Thread the Exhaust Port Plug into the hole. Apply 35 in-lbs. with the pin tool.
- Place leak seal into leak port. Thread plug into leak port. Apply 35 in-lbs. torque.
- Thread transfer tube into head ports using Latex gloves for added grip. Ensure that the shoulder of the transfer tube touches the flat surface around the port hole.
- Repeat for second pump head.

- Place control base on mounting base. Slide base forward. Slide locking lever to secure base.
- Ensure that the quick grip nuts on the Jaco fittings are loosely attached.
- Carefully guide the transfer tubes into the Jaco fittings. Gently manipulate the pump until all four transfer tubes are fully seated in the Jaco fittings.
- Hand-tighten all four of the quick grip nuts. Then use a wrench to turn the nuts 1½ to 2 more turns to fully seal the fitting.
- Follow pump connection instructions above.

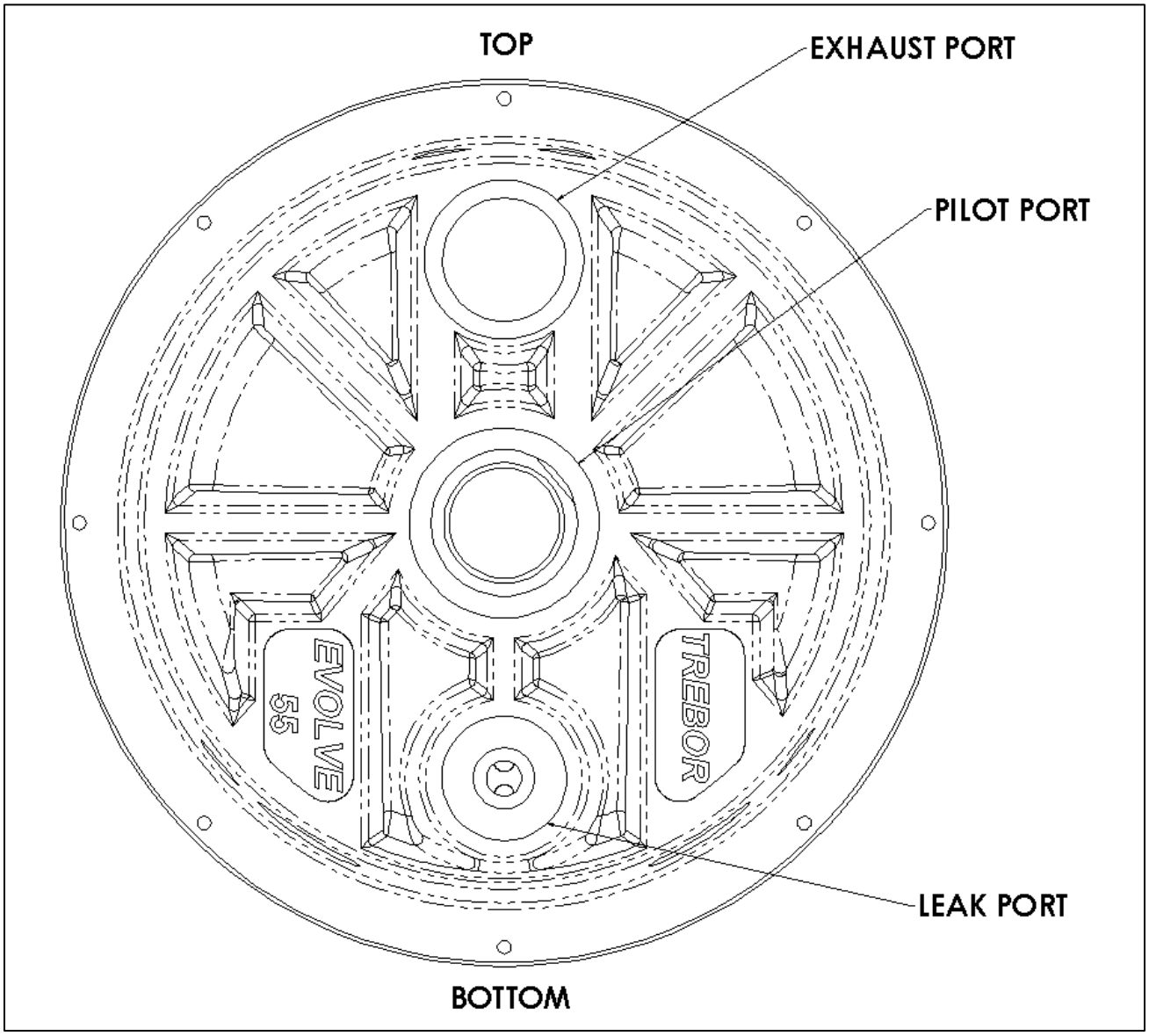

Figure 4-6: Port Location and Alignment of Pump Head

4.9 TESTING

4.9.a Performance Test

- Connect the pump to a fluid and air supply. See above instructions.
- With the air supply at 0 psi open the air supply valve
- Increase the air pressure until the pump starts to cycle (Note: Pump cycling is controlled by the external control system. The pump will not operate without an operating external controller.)
- Record the start pressure, Target = 28psig
- Pump must prime and even cycling must be achieved before continuing
- Increase pressure to 60 psi and allow pump to run for 5 minutes
- Check for fluid leaks, listen for air leaks, and check for irregular operation
- Close the air supply valve and disconnect the pump
- If required, prepare the pump for drying

4.9.b Pump Drying Procedure

- Connect vacuum hose to fluid discharge
- Connect purge line to fluid inlet
- Apply 60 psig air pressure to the fluid inlet
- Cycle pump & vacuum dry by rotating pump side to side for 30 seconds.
- Turn off Air Supply and allow the pump to purge for 5 minutes.

4.9.c Dry Suction Test

- Connect to air supply. See above instructions.
- Connect a vacuum capable line with instrumentation to the pump fluid inlet
- Apply 20 psig air pressure to the pump (Note: Pump cycling is controlled by the external control system. The pump will not operate without an operating external controller.)
- Measure and record the suction value
- Target = 12 in-Hg.

5 TROUBLESHOOTING

Pump Will Not Start, Fails to Operate

Cause:	Solution:
• Insufficient air pressure.	• Must be minimum 15 psi at pump air hook-up.
• Air lines not attached properly.	• Check external controller.
• Insufficient air volume (low supply pressure during running).	• See Performance Charts (Figure 3-1) for requirements. Check for both regulator and control valve capabilities.
• Fluid discharge line blocked. Downstream valve closed, filter plugged or other obstruction.	• Remove obstruction.
• Probe failure	• Check fiber optic probes for correct operation. • Check external controller. • Check for excessive bends in fiber optic cable. • Clean or trim fiber optic cable at the sensor.

Bubbles in Fluid Discharge

Cause:	Solution:
• Leaking fluid inlet fitting.	• Replace adapter seal.
• Leaking main seal.	• Tighten union nut to 125 ft-lbs. • Replace diaphragms • Check head and body seal grooves for nicks or scratches.
• Pump inlet line pressure reached saturation point (due to high suction requirement).	• Increase diameter of suction supply line (reduces restriction). • Reduce output flow.
• Ruptured (perforated) diaphragm.	• Replace diaphragms.
• Check bore caps leaking.	• Tighten check bore caps • Replace seals.

Fluid Leaks

Cause:	Solution:
• Union nut torque low	• Tighten union nuts to 125 ft.-lbs.
• Leaking main seal.	• Replace diaphragms. • Check head and body seal grooves for nicks or scratches.
• Check bore cap.	• Tighten cap • Remove and replace seal.
• Ruptured diaphragm(s)	• Replace diaphragms, and any parts that may have been damaged by fluid exposure.

Erratic Cycling

Cause:	Solution:
• Air line or fittings leak in external controller.	• Replace tubing or tighten fittings. • Replace controller.
• Suction line restricted (cavitation).	• Reduce fluid restriction.
• Quick exhaust seal not sealing.	• Inspect for particles between seal and port. Replace seal.
• Check ball(s) not seating.	• Inspect check assembly for damage; replace if necessary. • Make sure check balls move freely in sleeves.
• Transfer tube leaking.	• Tighten transfer tubes and quick grip nuts as described in Section 4.8.a.

6 WARRANTY

EVOLVE 55 PUMP

Trebor International, Inc. (“Trebor”) warrants to the original end-use purchaser that no product sold by Trebor that bears a Trebor brand* (“Trebor Product”) shall fail under normal use and service due to a defect in material or workmanship for **24 months** from date of shipment from Trebor’s factory.

If Trebor determines that Trebor Product has failed under normal use and service due to a defect in material or workmanship within the warranty period for such Trebor Product, Trebor will repair or replace such Trebor Product at no charge to the original end-use purchaser. The determination to repair or replace shall be made by Trebor in its sole discretion. The repaired or replacement Trebor Product shall be shipped to the original end-user purchaser freight collect unless the original end-user purchaser makes other arrangements for shipment. The original end-user purchaser shall bear all risk of loss or damage during shipment. Repaired and replacement Trebor Product shall be warranted only for the remainder of the original warranty period.

The above warranty and repair or replacement obligation does not apply if: (i) a Trebor Product is altered, changed, modified or tampered with in any way, other than an alteration, change or modification made by or with the authorization of Trebor, (ii) a Trebor Product is damaged after deposit with the carrier for shipment, (iii) a Trebor Product is not used and maintained in accordance with Trebor’s recommended operating and maintenance manuals, instructions and procedures, (iv) a Trebor Product is not properly incorporated or installed in, or not properly combined with, another product, component or part with which such Trebor Product is used (“Other Product”), (v) the failure or substandard performance of a Trebor Product is directly or indirectly attributable to, or directly or indirectly results from or arises out of, the failure or substandard performance of an Other Product, (vi) the failure or substandard performance of a Trebor Product is directly or indirectly attributable to, or directly or indirectly results from or arises out of, compliance with any design, specification or requirement of the original end-use purchaser, (vii) a Trebor Product is used in a manner, with a substance or for a purpose

other than the normal manner, substance and purpose for which it is intended or is otherwise subjected to abnormal use or service, (viii) a Trebor Product is subjected to a power surge, brown out or other similar occurrence, or (ix) the failure or substandard performance of a Trebor Product is directly or indirectly attributable to, or directly or indirectly results from or arises out of, normal wear and tear of the Trebor Product (including, without limitation, things such as worn seals, clogged passages or values, damage due to corrosive, insoluble, or abrasive substances, etc.).

To be eligible for warranty repair or replacement, the original end-use purchaser must notify Trebor of the Trebor Product failure in writing within the warranty period for such Trebor Product and, if requested by Trebor, the product must be promptly returned for inspection and evaluation, freight prepaid, to either Trebor’s factory at 8100 South 1300 West, West Jordan, Utah 84088 or to a Trebor authorized distributor. The original end-user purchaser must also promptly provide Trebor or its authorized distributor with all such information as either of them may request concerning the maintenance, operation, use and failure of any Trebor Product that is claimed to have failed due to a defect in material or workmanship. Return of a Trebor Product to Trebor’s factory requires a Return Material Authorization (RMA) from Trebor, and the RMA number must be included with the returned Trebor Product. The original end-user purchaser shall bear all risk of loss or damage during shipment.

THE ABOVE WARRANTY, RIGHTS AND REMEDIES ARE THE SOLE AND EXCLUSIVE WARRANTY, RIGHTS AND REMEDIES PROVIDED BY TREBOR TO ANY PURCHASER OR USER OF ANY PRODUCT AND ARE IN LIEU OF ALL OTHER WARRANTIES, RIGHTS AND REMEDIES, EXPRESS, STATUTORY OR IMPLIED, AND TREBOR DISCLAIMS ALL OTHER WARRANTIES, RIGHTS AND REMEDIES, EXPRESS, STATUTORY OR IMPLIED, IN RELATION TO ANY PRODUCTS, INCLUDING, WITHOUT LIMITATION, ANY IMPLIED WARRANTIES WITH RESPECT TO MERCHANTABILITY, FITNESS FOR ANY PARTICULAR PURPOSE, COMPATIBILITY OR INTEROPERABILITY WITH OTHER PRODUCTS, ACCURACY, PERFORMANCE AND NON-INFRINGEMENT, AND ANY WARRANTIES ARISING FROM ANY COURSE OF DEALING, USAGE OR TRADE PRACTICE. EXCEPT FOR THE ABOVE LIABILITIES AND OBLIGATIONS, TREBOR SHALL HAVE NO LIABILITY OR OBLIGATION TO ANY PURCHASER OR USER OF ANY PRODUCT IN CONNECTION WITH THE FAILURE, IMPROPER PERFORMANCE, MALFUNCTION, INACCURACY OR NON-CONFORMANCE OF, OR ANY DEFECT OR DEFICIENCY IN, ANY PRODUCT.

Under no circumstances shall Trebor have (i) any liability for any claim, loss, damage, injury, liability, obligation, cost or expense that directly or indirectly relates to or arises out of the use or failure of any product or (ii) any liability for any penalties or any indirect, consequential, incidental, special, punitive or reliance damages, including, without limitation, lost or unrealized sales, revenues, profits, income, cost savings or business, lost or unrealized contracts, loss of goodwill, damage to reputation, loss of property, loss of material being processed, loss of information or data, loss of production, downtime, or increased costs, even if Trebor is advised or placed on notice of the possibility of such damages and notwithstanding the failure of any essential purpose of any product.

Statements and data relating to products on Trebor's website and in Trebor's promotional, marketing and technical literature and materials are not warranties. Purchasers and users of products have the sole responsibility for determining the suitability of products for specific uses and applications.

Trebor makes no warranty with respect to product that does not bear a Trebor brand ("Non-Trebor Products"). Any warranty with respect to Non-Trebor products is limited to a pass through of the manufacturer's warranty to the extent permitted or authorized by the manufacturer.

In any event, Trebor's total liability to any purchaser or user of any product shall limited to the original price paid to Trebor for such product.

No Trebor distributor or other person is authorized to modify this Standard Limited Warranty or impose any liability or obligation on Trebor other than expressly provided herein.

7 CONTACT INFORMATION

7.1 GENERAL CONTACT INFORMATION

Web: www.treborintl.com

Phone Number: (801) 561-0303
Toll Free Number: (800) 669-1303
Fax Number: (801) 255-2312

Email: treborinfo@idexcorp.com
treborsales@idexcorp.com

Address: Trebor International
8100 South 1300 West
West Jordan, Utah 84088 U.S.A.

7.2 TECHNICAL SUPPORT

Email: treborservice@idexcorp.com

Phone Number: (801) 244-6156

7.3 REGIONAL REPRESENTATIVES

Web: http://www.treborintl.com/about_contact_us.asp#