Contact Us

Asia Pacific Headquarters
Suite 2503-10A, 25/F, Exchange Tower,
33 Wang Chiu Road, Kowloon Bay,
Kowloon, Hong Kong
Tel: (852) 2866 3108
Fax: (852) 2520 6227

Australia
356 Chisholm Road
Auburn NSW 2144, Australia
Tel: (612) 9795 2800
Fax: (612) 9738 1699

China - Beijing
Room 1203-1205,
North Wing Junefield Plaza Central Tower,
No. 10 Xuan Wu Men Wai Street,
XiCheng District, Beijing, PRC
Tel: (8610) 5095 2188

China - Guangzhou
Guangzhou Office
Unit 2202B, 22/F, Leatop Plaza,
32 Zhujiang East Road, Tianhe Dist.,
Guangzhou 510623, PRC
Tel: (8620) 8595 5188

China - Shanghai
Shanghai Sales Office
7/F, Emerson Building, 1582 Gumei
Rd, Shanghai, PRC
Tel: (8621) 3338 7333

India - Mumbai
601-602, 6/F Delphi B-Wing,
Central Avenue,
Hiranandani Business Park,
Powai, Mumbai 400076, India
Tel: (9122) 6786 0793
Fax: (9122) 6662 050

Egypt
P.O. Box 11799
11 &12/ 1138 Mustafa
Refaat Street Sheraton,
Heliopolis Cairo, Egypt
Tel: +20 2 226 5854

India - Pune
Plot No. 23, Rajiv Gandhi Infotech Park,
Phase - II, Hinjewadi,
Pune 411 057, Maharashtra, India
Tel: (9120) 4200 2000
Fax: (9120) 4200 2099

Japan
No. 3-9-5 Shin-Yokohama,
Shin-yokohama Tosho Building,
Kohoku-ku, Yokohama,
222-0033 Japan
Tel: (8145) 475 6371
Fax: (8145) 475 3565

Middle East & Africa
PO Box 26382
Jebel Ali Free Zone - South
Dubai, UAE
Tel: (9714) 811 8100
Fax: (9714) 886 5465

Philippines
10/F SM Cyber West Avenue,
EDSA cor. West Avenue,
Barangay Bungad, Diliman,
Quezon City 1105, Philippines
Tel: (632) 689 7200 ext. 4395

South Africa
11 Quark Crescent
Linbro Business Park
Sandton 2065, South Africa
Toll Free: 0800 980 3711

Saudi Arabia
PO Box 34332 - 3620
3620 Building 7874, Unit 1,
67th street 2nd Industrial City
Dammam, Saudi Arabia
Toll Free: 800 844 3426
Tel: (966) 3814 7560
Fax: (966) 3814 7570

South Korea
5/F, NIA Building,
Cheonggyecheon-ro,
Jung-gu 04520, Seoul Korea
Tel: (822) 3483 1500
Fax: (822) 592 7883

Thailand
34/F, Interlink Tower,
1558/133, Bangna Trad,
Bangkok 10260, Thailand
Tel: (662) 716 4700
Fax: (662) 751 4241

United Arab Emirates
Jebel Ali Free Zone
P.O. Box 26382, Dubai
United Arab Emirates
Toll Free: 80004413428
Tel: +97148118100
Fax: +97148865465

Scan to visit:

Copeland

@CopelandAP
@Copeland_APAC

Copeland.com

Asia 23 B02 01- R02 Issued 08/2023

©2023 Copeland LP. All rights reserved.

谷轮 涡旋压缩机
智能控制模块
Copeland Compressor Electronics Module

使用说明书
User Manual
中文 / English



COPELAND



感谢您从谷轮购买涡旋压缩机智能控制模块和其相关配件包

新一代谷轮涡旋压缩机智能控制模块是一款突破性创新产品，具有高级诊断、智能保护和对外通讯等功能，增强了压缩机的性能和可靠性。该模块采集有用的压缩机运行信息，帮助工程商或售后人员快速准确的诊断故障和解决商用制冷系统中的问题，减少不必要的成本浪费。

目录

连接手机 App	03
产品特点和技术规格	04
拨码开关设定	08
报警代码定义	10
喷液和喷气增焓控制附件包	12
模块安装	14
现场改造	15
接线图	16

连接手机 App

和手机应用程序App连接后，您可以读取压缩机运行信息或者下载历史运行数据。通过手机应用程序，方便您实时查看压缩机运行状态以此判断该制冷系统或压缩机的健康情况，这也有助于缩短系统调试时间并帮助售后人员快速准确的排查故障。

当压缩机在运行时，模块每隔20秒存储一次运行数据，模块里的芯片大概能储存72小时(有效运行时间)历史运行数据。压缩机停机时将不记录任何数据，旧的数据会被新的数据覆盖。建议下载历史数据时选择必要的时间段，下载全部的数据将花费您比较长的时间。

第一步： 在App商店搜索“**Copeland Electronics Module**”安装在您的手机上。
苹果iOS系统手机可以直接在苹果应用商店下载安装。
安卓系统手机目前支持在“腾讯应用宝”应用商店下载安装。

Copeland Electronics Module
Emerson Climate Technologies, Inc.

第二步： 打开手机蓝牙，寻找蓝牙并配对“Emerson xxxxxxx”
(注：后8位数字为模块标签上的序列号)

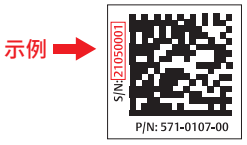

产品特点和技术规格

该控制模块包含一块集成电路板，藉由连接在制冷压缩机内部和外部制冷系统的传感器来跟踪压缩机的运行状态。如果一个不安全的故障被探测到，该模块将切断压缩机接触器来停止压缩机，并显示故障报警。

该模块有两个设计版本以适配不同平台的压缩机:

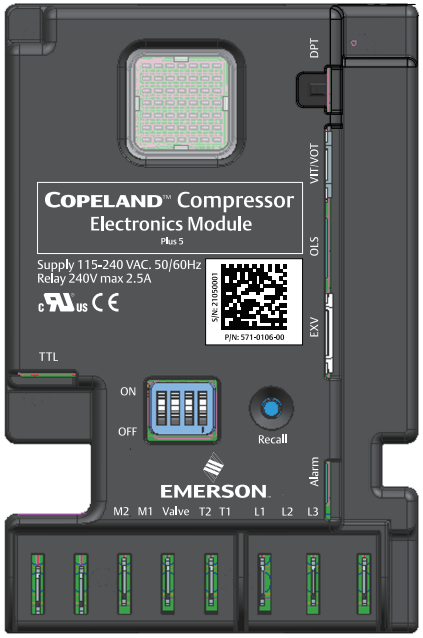

571-0106-00, Plus 5

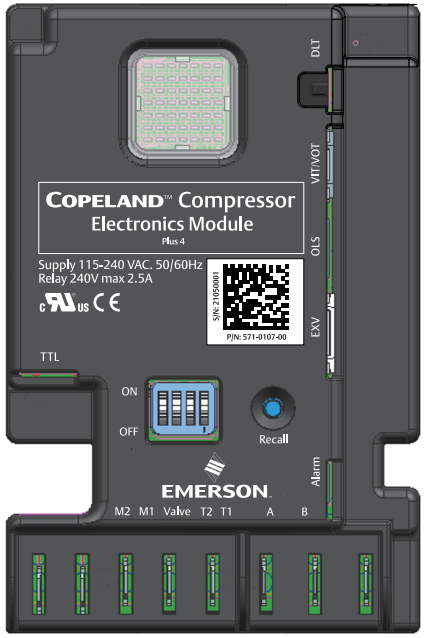

571-0107-00, Plus 4

冷冻大涡旋ZB150-ZB220，ZFI96-ZFI140系列压缩机出厂时接线盒内已预安装此模块(Plus 5)，这些压缩机的马达代码中有一个"R"，例如：ZFI122KQE-TRD。

喷液系列ZSI06-ZSI21和喷气增焓系列ZFI09-ZFI81压缩机可以选择含有此模块(Plus 4)的配件包。

模块产品规格:

模块料号	571-0106-00	571-0107-00
版本	Plus 5	Plus 4
T1/T2 供电电压 & 频率	115-240 Vac, 50-60Hz	115-240 Vac, 50-60Hz
T1/T2 容许的电压范围	97 -264 Vac	97-264 Vac
T1/T2 低电压保护值	90/170 Vac	90/170 Vac
T1/T2 低电压复位值	95/185 Vac	95/185 Vac
模块功率消耗	25 VA	25 VA
M1/M2 触点额定电流,电压	2.5A, 240Vac	2.5A, 240Vac
Alarm报警输出触点额定电流,电压	2.5A, 240Vac	2.5A, 240Vac
电磁阀供电额定电流,电压	0.4A, 240Vac	0.4A, 240Vac
马达温度传感器过热保护阻值	> 4.5KΩ ± 25%	NA
马达温度传感器开路保护阻值	>220KΩ	NA
马达温度传感器短路保护阻值	<40Ω	NA
马达温度传感器复位阻值	< 2.75KΩ	NA
马达保护复位延时时间	30 分钟	NA
环境温度	-30° 至70°C	-30° 至 70°C
模块认证	UL, CE	UL, CE
模块IP等级	IP20	IP20

模块接口定义:

接口	描述	571-0106-00	571-0107-00
		Plus 5	Plus 4
T1/T2	模块供电接口, 115-240 VAC, 50-60Hz	·	·
L1/L2 /L3	连接马达三相火线 (出厂已接线)	·	
M1/M2	接系统控制回路，与压缩机接触器线圈串联	·	
	接压缩机接触器线圈，开关信号		·
A/B	接系统开关信号，来自温控器或低压开关		·
Valve	回油电磁阀 (适用于并联系统回油)	·	·
DPT	连接涡旋排气口内置温度传感器 (出厂已接线)	·	
DLT	连接压缩机排气管外置温度传感器		·
VIT/VOT	板换进出口过热度控制传感器 (适用EVI喷气压缩机)	·	·
OLS	油位保护传感器 (可选, 单机或并联应用)	·	·
EXV	EXV 电子膨胀阀 (适用喷液或喷气压缩机)	·	·
Alarm	报警输出接口，至蜂鸣器	·	·
TTL	电脑或RS485通讯接口 (需转接板)	·	·
Recall	报警数据查询按钮	·	·

产品特点和技术规格

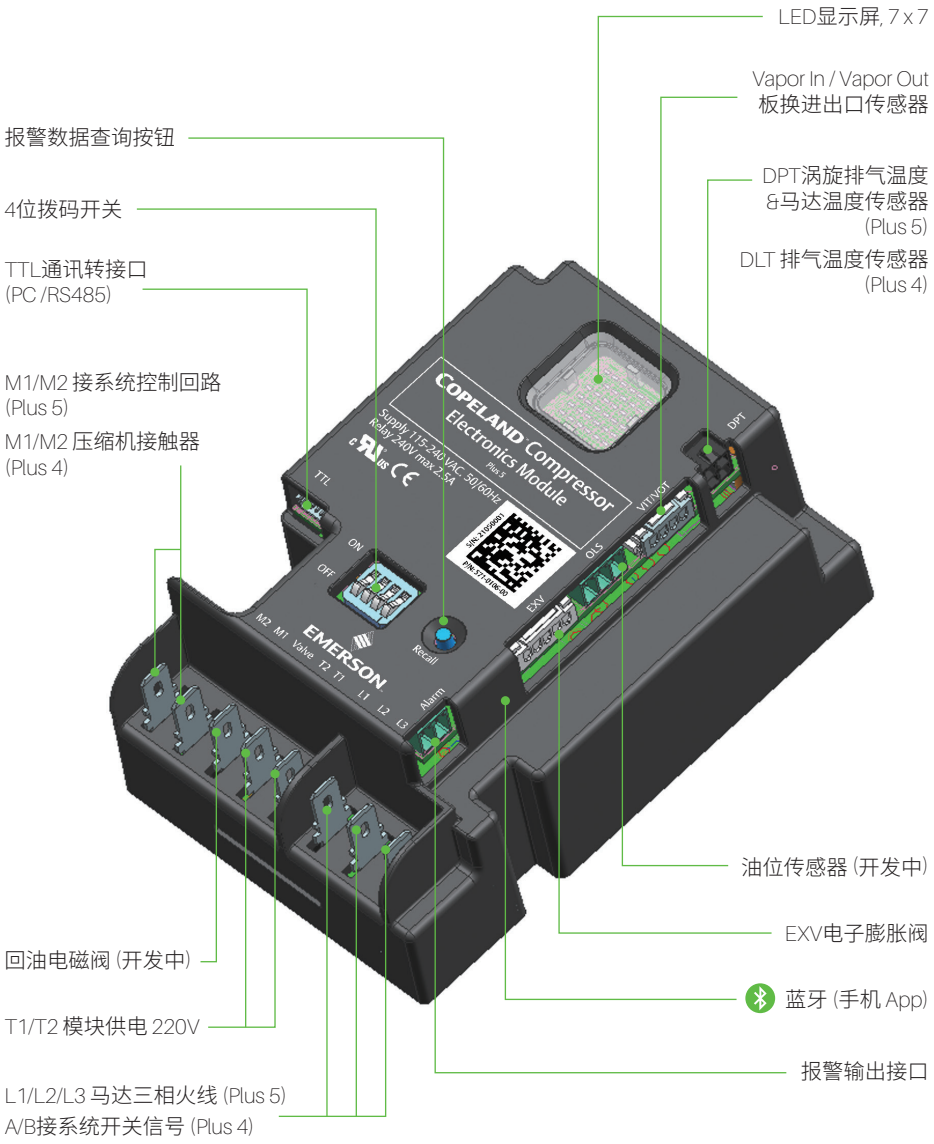

主要功能	571-0106-00	571-0107-00
	Plus 5	Plus 4
马达保护		
马达温度传感器过热保护	·	
马达堵转保护	·	
马达缺相保护	·	
马达反转保护	·	
高级保护		
排气温度过热保护	·	·
压缩机频繁启停保护	·	·
模块低电压保护	·	·
喷液或喷气增焓控制		
喷液控制	·	·
喷气增焓控制	·	·
油位管理(开发中)		
油位保护藉由油位传感器	·	·
回油管理藉由电磁阀	·	·
自我诊断与数据管理		
LED 矩阵显示运行状态和查看历史报警	·	·
读取压缩机运行信息	·	·
下载历史数据	·	·
对外通讯		
报警输出至蜂鸣器	·	·
蓝牙连接手机	·	·
PC 通讯和RS485 通讯 (开发中)	·	·

拨码开关设定

Bit1拨码开关用于选择排气温度目标值；Bit2拨码开关控制启用或关闭油位管理功能；Bit3和Bit4拨码开关组合用于选择喷射模式和板换进出口过热度目标。



Plus 5 模块: 571-0106-00

位置	Bit 1	Bit 2	Bit 3	Bit 4
OFF	涡旋排气口温度 DPT 120°C (OFF)	关闭油位管理 (OFF)	关闭喷射控制 (ON-OFF) 喷液 (ON-ON) 喷气5K过热度 (OFF-OFF) 喷气10K过热度 (OFF-ON)	
ON	压缩机排气口温度 DLT 110°C (ON)	启用油位管理 (ON)		

Plus 4 模块: 571-0107-00

位置	Bit 1	Bit 2	Bit 3	Bit 4
OFF	压缩机排气口温度 DLT 110°C (OFF)	关闭油位管理 (OFF)	关闭喷射控制 (ON-OFF) 喷液 (ON-ON) 喷气5K过热度 (OFF-OFF) 喷气10K过热度 (OFF-ON)	
ON	压缩机排气口温度 DLT 95°C (OFF)	启用油位管理 (ON)		

拨码开关在典型应用中设定示例:

Plus 5 模块: 571-0106-00

压缩机型号	拨码开关设定				应用
	Bit 1	Bit 2	Bit 3	Bit 4	
ZFI96 ZFI122 ZFI140	OFF	OFF	OFF	OFF	DPT 120°C + 喷气5K (出厂默认设置)
	涡旋排气口温度 控制目标DPT 120°C	关闭油位管理	喷气5K板换过热度		
	OFF	OFF	OFF	ON	DPT 120°C + 喷气10K (适用温度滑移制冷剂)
	涡旋排气口温度 控制目标DPT 120°C	关闭油位管理	喷气10K板换过热度		
	OFF	ON	OFF	OFF	DPT 120°C + 喷气5K + 油位控制 (单机或并联)
	涡旋排气口温度 控制目标DPT 120°C	启用油位管理	喷气5K板换过热度		
	OFF	OFF	ON	OFF	DPT 120°C + 关闭喷射控制 (适用于客户自己做EVI控制)
	涡旋排气口温度 控制目标DPT 120°C	关闭油位管理	关闭喷射控制		
ZB150 ZB190 ZB220	OFF	OFF	ON	OFF	DPT 120°C + 关闭喷射控制 (出厂默认设置)
	涡旋排气口温度 控制目标DPT 120°C	关闭油位管理	关闭喷射控制		
	OFF	ON	ON	OFF	DPT 120°C + 关闭喷射控制 + 油位控制 (单机或并联)
	涡旋排气口温度 控制目标DPT 120°C	启用油位管理	关闭喷射控制		
	OFF	OFF	ON	ON	DPT 120°C + 喷液 (适用吸气管路增加喷液)
	涡旋排气口温度 控制目标DPT 120°C	关闭油位管理	喷液		

Plus 4 模块: 571-0107-00

压缩机型号	拨码开关设定				应用
	Bit 1	Bit 2	Bit 3	Bit 4	
ZFI09-ZFI81	OFF	OFF	OFF	OFF	DLT 110°C + 喷气5K (出厂默认设置)
	压缩机排气口温度 控制目标DLT 110°C	关闭油位管理	喷气5K板换过热度		
	OFF	OFF	OFF	ON	DLT 110°C + 喷气10K (适用温度滑移制冷剂)
	压缩机排气口温度 控制目标DLT 110°C	关闭油位管理	喷气10K板换过热度		
	OFF	ON	OFF	OFF	DLT 110°C + 喷气5K + 油位控制
	压缩机排气口温度 控制目标DLT 110°C	启用油位管理	喷气5K板换过热度		
	OFF	OFF	ON	OFF	适用于客户自己做EVI控制， 不用此模块
	不控制排温	关闭油位管理	关闭喷射控制		
ZSI06-ZSI21	OFF	OFF	ON	ON	DLT 110°C + 喷液 (出厂默认设置)
	压缩机排气口温度 控制目标DLT 110°C	关闭油位管理	喷液		
	ON	OFF	ON	ON	DLT 95°C + 喷液
	压缩机排气口温度 控制目标DLT 95°C	关闭油位管理	喷液		
ZB58-ZB114	ON/OFF	ON	ON	OFF	适用于客户仅选用模块 做油位管理
	不控制排温	启用油位管理	关闭喷射控制		

报警代码定义

故障代码	LED屏幕	类型	故障代码描述	Plus 5	Plus 4	故障触发条件	故障排除参考
0	长亮	NA	正常运行	•	•	NA	NA
0	闪烁	NA	压缩机正常停机	•	•	NA	NA
1	闪烁	停机	排气温度过热保护	•	•	≥ 控制目标值+15℃； 停机保护10分钟后自动复位	1/ 检查制冷剂充注,是否充注不足或系统泄漏 2/ 检查吸气过热度是否偏高,确认是否缺氟或膨胀阀开度过小或气管保温不足 3/ 测量低压压力和高压压力,判断低压控制器设定和高低压保护器是否异常 4/ 检查喷射系统,EXV是否损坏或脏堵或冰堵 5/ 检查压缩机,确认压缩机电流是否异常或内部可能已缺油磨损
2	闪烁	停机	排气温度传感器短路	•	•	Ω < 500Ω； 停机保护10分钟后自动复位	1/ 检查传感器和模块连接是否正常 2/ 检查传感器线束是否破损,更换传感器
			排气温度传感器开路	•	•	Ω > 1000KΩ 停机保护10分钟后自动复位	1/ 检查传感器和模块连接是否正常 2/ 检查传感器线束是否破损,更换传感器
3	闪烁	警告	板换进气口温度传感器短路	•	•	Ω < 500Ω	1/ 检查传感器和模块连接是否正常 2/ 检查传感器线束是否破损,更换传感器
			板换进气口温度传感器开路	•	•	Ω > 500KΩ	1/ 检查传感器和模块连接是否正常 2/ 检查传感器线束是否破损,更换传感器
4	闪烁	警告	板换出气口温度传感器短路	•	•	Ω < 500Ω	1/ 检查传感器和模块连接是否正常 2/ 检查传感器线束是否破损,更换传感器
			板换出气口温度传感器开路	•	•	Ω > 500KΩ	1/ 检查传感器和模块连接是否正常 2/ 检查传感器线束是否破损,更换传感器
5	闪烁	警告	板换进气口温度传感器超范围	•	•	VIT <-40°C 或 VIT>75°C	1/ 检查传感器安装位置是否正确 2/ 检查系统制冷剂充注是否过低和取液是否正常
6	闪烁	警告	板换出气口温度传感器超范围	•	•	VOT <-40°C 或 VOT>75°C	1/ 检查传感器安装位置是否正确 2/ 检查系统制冷剂充注是否过低和取液是否正常
7	闪烁	锁定	低油位锁定	•	•	开发中,待定	待定
8	闪烁	停机	模块低电压	•	•	< 170/95V； 停机保护5分钟后自动复位	1/ 检查供电电压是否异常 2/ 更换模块
9	闪烁	锁定	模块内部故障	•	•	模块故障	1/ 关机后重新上电 2/ 更换模块
A	闪烁	警告	模块蓝牙通信器件故障	•	•	连续5次通信故障	1/ 关机后重新上电 2/ 更换模块
C	闪烁	锁定	模块内部版本配置故障	•	•	内部配置故障	1/ 更换模块
E	闪烁	停机	马达温度传感器过热	•		Ω > 4.5KΩ； 停机保护30分钟后自动复位	1/ 检查供电电压是否异常 2/ 检查系统制冷剂充注和吸气过热度 3/ 检查压缩机是否超范围运行 4/ 检查接触器
F	闪烁	锁定	马达温度传感器过热锁定	•		连续5次停机	1/检查供电电压是否异常 2/检查系统制冷剂充注和吸气过热度 3/检查接触器

故障代码	LED屏幕	类型	故障代码描述	Plus 5	Plus 4	故障触发条件	故障排除参考
G	闪烁	停机	马达温度传感器短路	•		Ω < 40Ω； 停机保护30分钟后自动复位	1/ 检查传感器引线和模块连接是否正常
			马达温度传感器开路	•		Ω > 220KΩ； 停机保护30分钟后自动复位	1/ 检查传感器引线和模块连接是否正常
H	闪烁	锁定	马达温度传感器开路锁定	•		6小时持续开路	1/ 检查传感器引线和模块连接是否正常
			马达温度传感器短路锁定	•		6小时持续短路	1/ 检查传感器引线和模块连接是否正常
J	闪烁	停机	缺相	•		停机保护5分钟后自动复位	1/ 检查电源输入 2/ 检查供电系统保险丝/断路器 3/ 检查接触器
K	闪烁	锁定	缺相锁定	•		连续10次停机	1/ 检查电源输入 2/ 检查供电系统保险丝/断路器 3/ 检查接触器
L	闪烁	锁定	反相锁定	•		反相	1/ 检查输入相序是否异常 2/ 检查接触器 3/ 检查模块L1-L2-L3端口接线
M	闪烁	警告	压缩机强制运行	•		模块检测到停机故障但无法停止压缩机	1/ 检查接触器触点是否粘连 2/ 检查模块M1-M2保护触点是否短路 3/ 检查系统控制回路是否旁通模块M1-M2触点
N	闪烁	警告	压缩机频繁启动警告(默认配置)	•	•	在一个开停机周期内压缩机运行时间小于1分钟且24小时内频繁启停超过48次	1/ 检查系统制冷剂充注和压控设定 2/ 检查温控器设定值
P	闪烁	锁定	压缩机频繁启动锁定(需手动配置)	•	•	在一个开停机周期内压缩机运行时间小于1分钟且24小时内频繁启停超过48次	1/ 检查系统制冷剂充注和压控设定 2/ 检查温控器设定值

喷液和喷气增焓控制附件包

谷轮生提供客户喷液和喷气增焓控制附件包，1.8米线长和4.5米线长可选。

喷液控制附件包

组件料号 1.8米线长(1)	组件料号 4.5米线长	应用于 ZSI压缩机型号	EXV电子膨胀阀 阀体口径(识别号)
562-0471-00	NA	ZSI06-ZSI21	Ø1.3mm (TS113C03)

备注: (1) 562-0471-00 包含在ZSI压缩机BOM536/539

EVI喷气增焓控制附件包

组件料号 1.8米线长	组件料号 4.5米线长	应用于 ZFI压缩机型号	EXV电子膨胀阀 阀体口径(识别号)
562-0471-01	562-0471-02	ZFI09-ZFI26	Ø1.3mm (TS113C03)
562-0471-03	562-0471-04	ZFI36-ZFI39	Ø1.65mm (TS116C03)
562-0471-05	562-0471-06	ZFI50-ZFI59	Ø1.65mm (TS116C03)
562-0471-07	562-0471-08	ZFI68-ZFI81	Ø1.8mm (TS118C03)
562-0460-00	562-0460-01	ZFI96-ZFI140	Ø2.4mm (TS124C03)

喷液喷气附件包BOM物料分解

1.8米线长附件包

应用于压缩机型号		ZSI06-ZSI21	ZFI09-ZFI26	ZFI36-ZFI39	ZFI50-ZFI59	ZFI68-ZFI81	ZFI96-ZFI140
附件包组件		562-0471-00	562-0471-01	562-0471-03	562-0471-05	562-0471-07	562-0460-00
1	控制模块	571-0107-00	571-0107-00	571-0107-00	571-0107-00	571-0107-00	随压缩机
2	模块托架	074-1855-00	074-1855-00	074-1855-00	NA	NA	NA
3	螺丝组件	521-0355-00	521-0355-00	521-0355-00	NA	NA	NA
4	排气温度温传感器	543-0317-00	543-0317-00	543-0317-00	543-0317-00	543-0317-00	随压缩机
5	喷气进出口温度传感器	NA	043-0285-00	043-0285-00	043-0285-00	043-0285-00	043-0285-00
6	EXV 前置过滤器	013-0212-00	013-0212-00	013-0212-00	013-0212-00	013-0212-00	013-0212-00
7	EXV线圈	023-0111-00	023-0111-00	023-0111-00	023-0111-00	023-0111-00	023-0111-00
8	EXV阀体	010-0240-00	010-0240-00	010-0240-01	010-0240-01	010-0240-02	010-0240-03
9	防水接头 - 单孔	NA	NA	NA	036-1868-00	036-1868-00	036-1868-00
10	防水接头 – 七孔	NA	NA	NA	036-1869-00	036-1869-00	036-1869-00
11	感温包套管	028-3998-00	028-3998-00	028-3998-00	028-3998-00	028-3998-00	028-3998-00
12	感温包固定弹片	032-0962-00	032-0962-00	032-0962-00	032-0962-00	032-0962-00	032-0962-00
13	接线端子	521-0398-00	521-0398-00	521-0398-00	521-0398-00	521-0398-00	521-0398-00

4.5米线长附件包

应用于压缩机型号		ZSI06-ZSI21	ZFI09-ZFI26	ZFI36-ZFI39	ZFI50-ZFI59	ZFI68-ZFI81	ZFI96-ZFI140
附件包组件		NA	562-0471-02	562-0471-04	562-0471-06	562-0471-08	562-0460-01
1	控制模块	NA	571-0107-00	571-0107-00	571-0107-00	571-0107-00	随压缩机
2	模托架	NA	074-1855-00	074-1855-00	NA	NA	NA
3	螺丝组件	NA	521-0355-00	521-0355-00	NA	NA	NA
4	排气温度温传感器	NA	543-0317-01	543-0317-01	543-0317-01	543-0317-01	随压缩机
5	喷气进出口温度传感器	NA	043-0285-01	043-0285-01	043-0285-01	043-0285-01	043-0285-01
6	EXV 前置过滤器	NA	013-0212-00	013-0212-00	013-0212-00	013-0212-00	013-0212-00
7	EXV线圈	NA	023-0111-01	023-0111-01	023-0111-01	023-0111-01	023-0111-01
8	EXV阀体	NA	010-0240-00	010-0240-01	010-0240-01	010-0240-02	010-0240-03
9	防水接头 - 单孔	NA	NA	NA	036-1868-00	036-1868-00	036-1868-00
10	防水接头 – 七孔	NA	NA	NA	036-1869-00	036-1869-00	036-1869-00
11	感温包套管	NA	028-3998-00	028-3998-00	028-3998-00	028-3998-00	028-3998-00
12	感温包固定弹片	NA	032-0962-00	032-0962-00	032-0962-00	032-0962-00	032-0962-00
13	接线端子	NA	521-0398-00	521-0398-00	521-0398-00	521-0398-00	521-0398-00

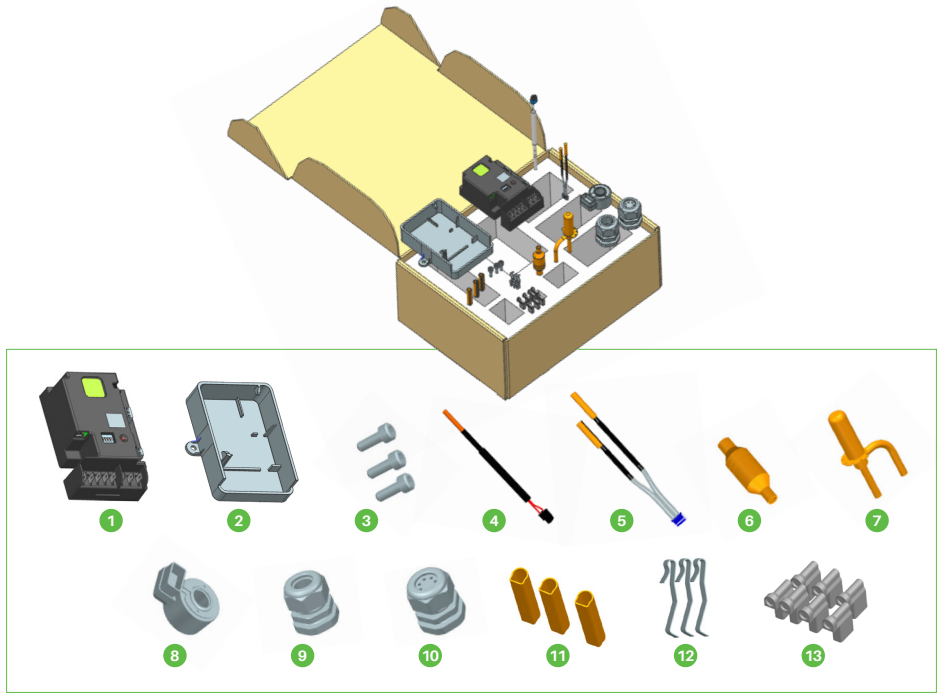



ZFI20-39, ZSI06-21

对ZFI20-39和ZSI06-21系列涡旋压缩机,该模块安装一个单独的模块托架内,并固定在冷凝机组电控箱中;

模块托架

该模块是通过压缩机接线盒或者模块托架盒内的2个爪型卡口安装固定,拆卸模块只需掰离爪型卡扣即可。

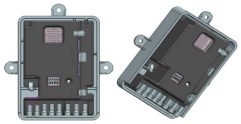



ZFI50-81

对ZFI50-81 Summit 平台, 该模块可以安装在压缩机接线盒内;



ZB150-220, ZFI96-140

对ZB150-220和ZFI96-140系列大涡旋压缩机,
该模块出厂已经安装在压缩机接线盒内;

新一代谷轮涡旋压缩机智能控制模块可应用于以下型号的压缩机现场维修更换,包括ZSI喷液控制模块,ZFI喷气增焓控制模块,ZFI低温大涡旋压缩机P47 智能模块和喷气增焓控制模块。

型号	现场改造要点
ZSI06-ZSI21	· 移除旧模块组件包括控制板,变压器,接线盒和排气温度传感器 · 用新模块,模块托架和排气温度传感器安装替换; EXV电子膨胀阀通用 · 根据新的接线图接线,接线逻辑同之前
ZFI20-ZFI81	· 移除旧模块组件包括控制板,变压器,接线盒,排气温度传感器, 喷气进口和喷气出口传感器 · 用新模块,模块托架 (ZFI20-ZFI39),防水接头(ZFI50-ZFI81), 排气温度传感器,喷气进口和喷气出口传感器安装替换; EXV电子膨胀阀通用 · 根据新的接线图接线,接线逻辑同之前
ZFI96-ZFI140	· 移除旧模块组件包括控制板,变压器,接线盒,排气温度传感器, 喷气进口和喷气出口传感器 · 移除压缩机接线盒内的P47模块 · 用新模块,防水接头,喷气进口和喷气出口传感器安装替换; EXV电子膨胀阀通用; · 根据新的接线图接线,接线复杂度降低

ZSI06-ZSI14 单相压缩机 (配plus 4模块)

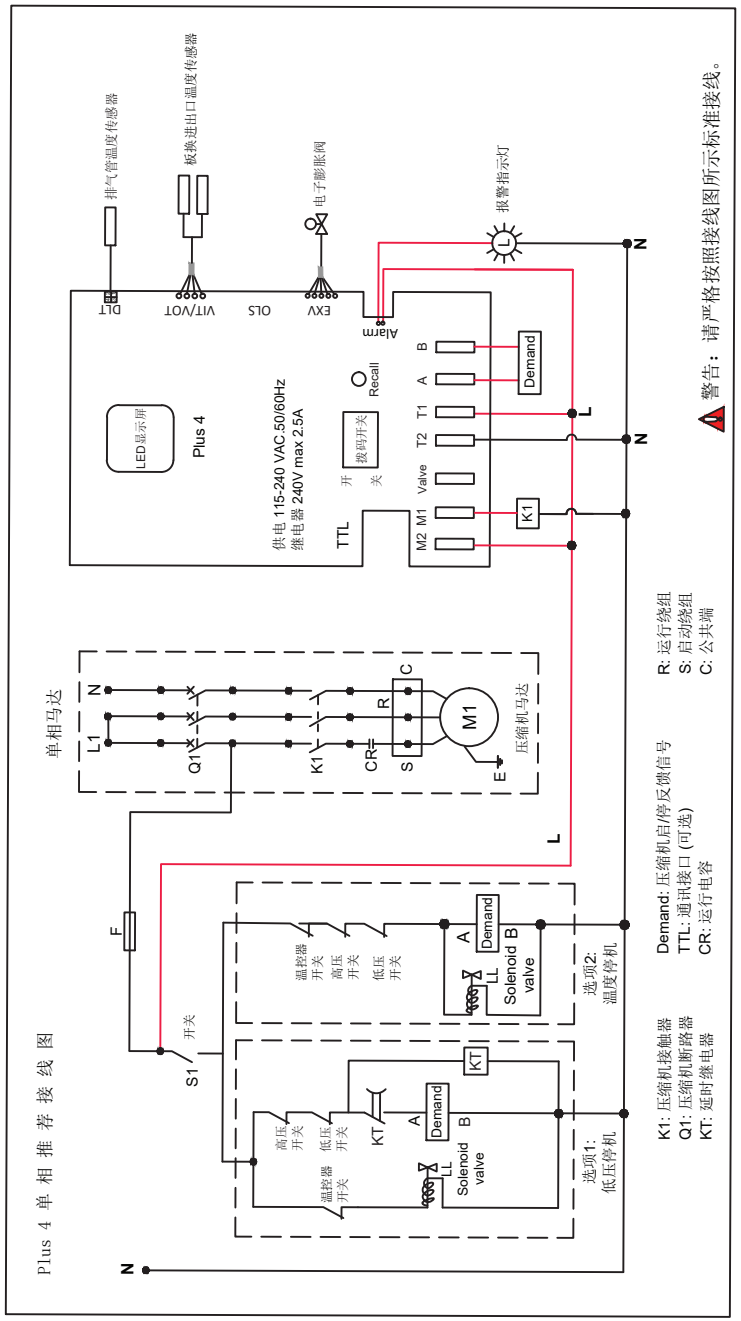

ZSI06-ZSI21, ZFI09-ZFI81三相压缩机 (配plus 4模块)

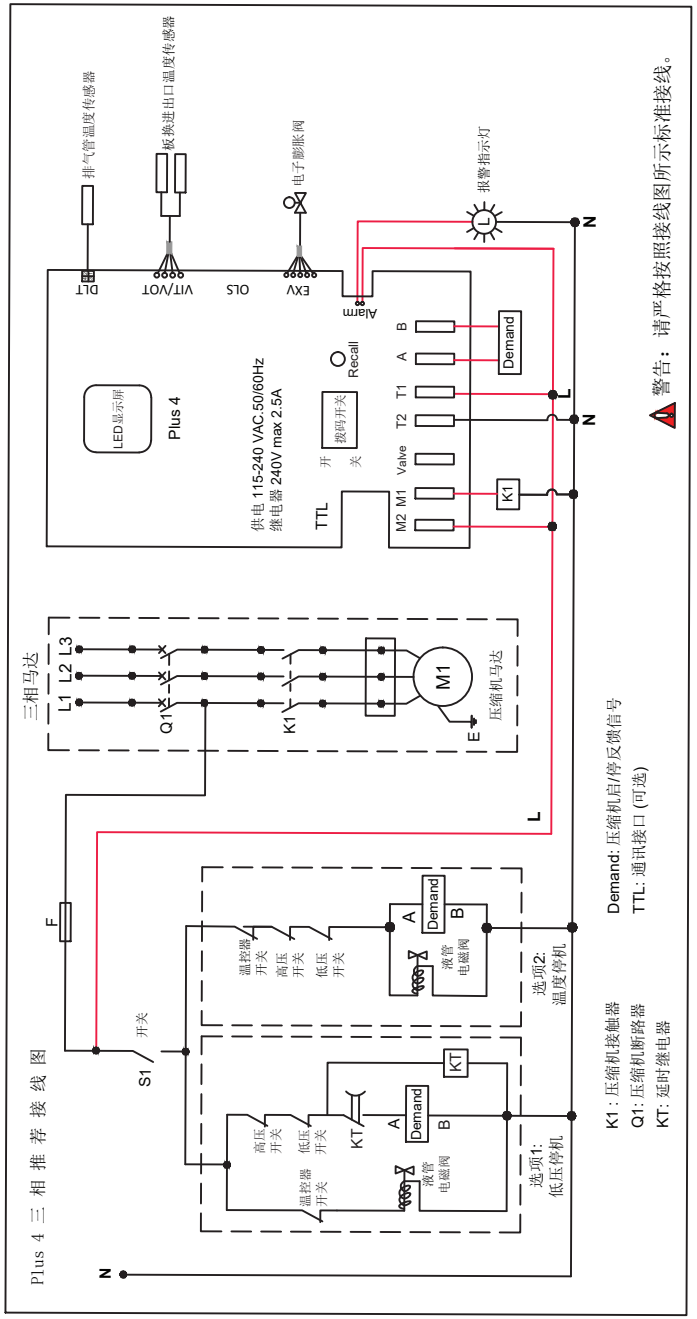

ZFI96-ZFI140 三相压缩机 (配plus 5模块)

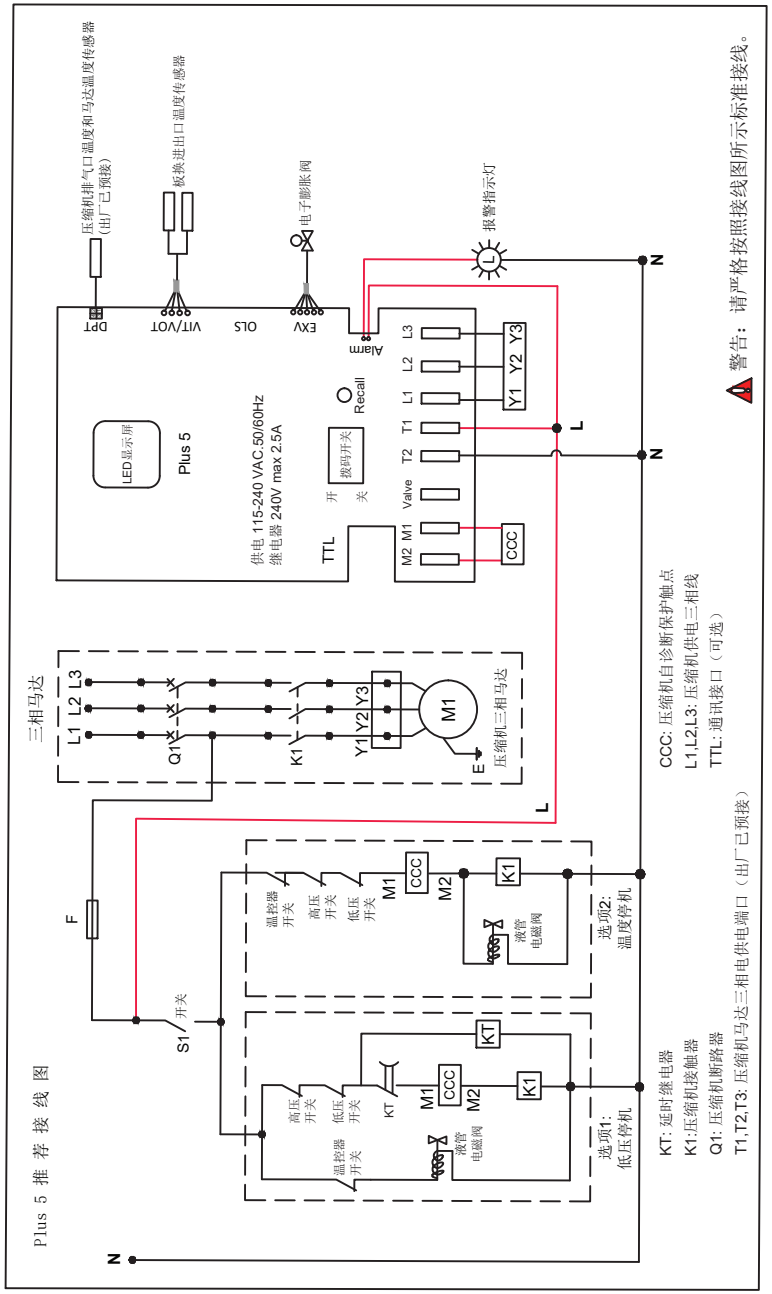

控制模块

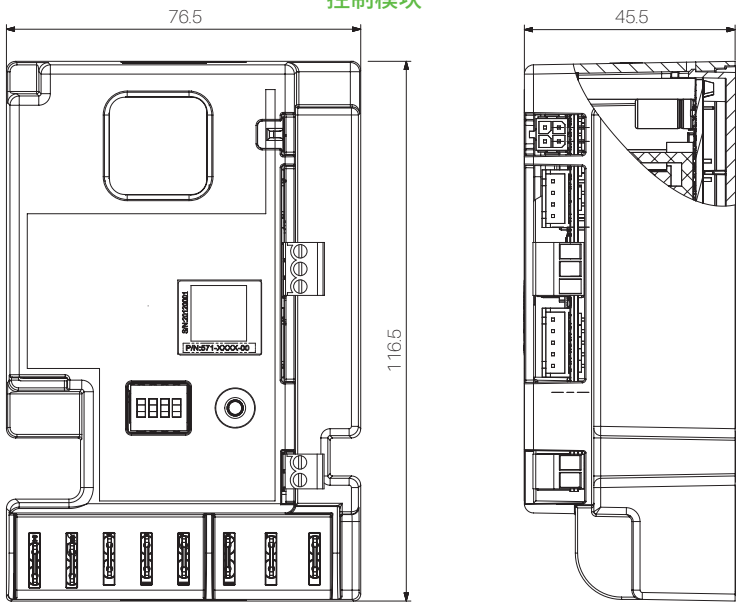

模块托架

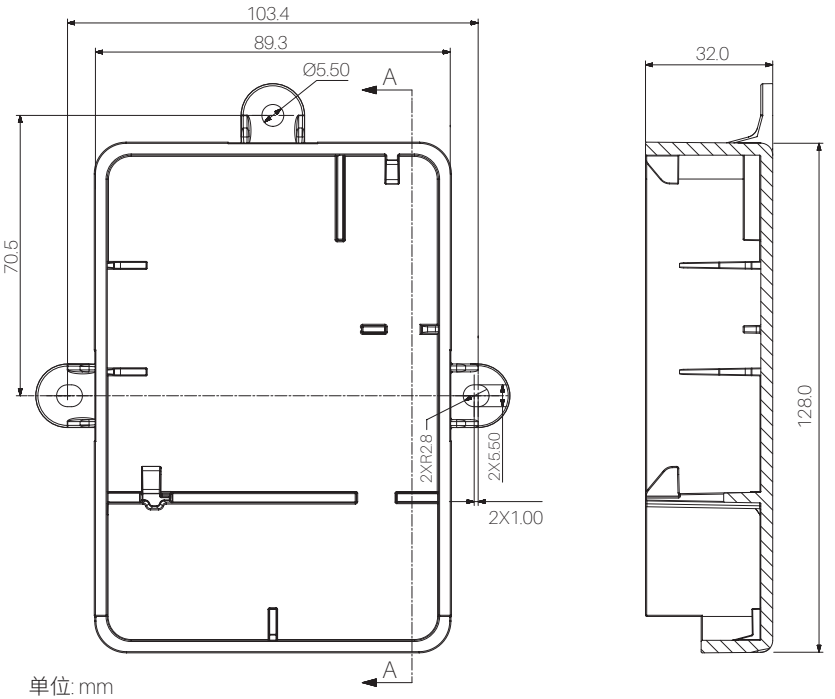

单位: mm



Thank you for purchasing the compressor electronics module and the related kits from Copeland.

The next generation of Copeland's compressor electronics module presents a breakthrough in innovation, by providing advanced diagnostics, intelligent protection and communications that enhances compressor performance and reliability. The module assists contractors or service providers in the troubleshooting of commercial refrigeration systems by providing valuable information to help diagnose issues quickly and accurately, significantly reducing costly downtimes.

Contents

Connecting to the Mobile App	21
Product features and technical specifications	22
Dip-switch setting	26
Alarm code definition and troubleshooting reference	28
Liquid injection and vapor injection control kits	30
Module installation	32
Field retrofit	33
Wiring diagrams	34

Connecting to the Mobile App

Accessing critical compressor information is made more convenient by connecting your smartphone via the mobile app. The real-time data and condition of the compressor is downloaded to the mobile device, helping service technicians identify potential problems before they happen, preventing system downtimes. Historical data helps technicians to analyze and quickly resolve problems in the field.

When the compressor starts, the module stores the running data every 20 seconds. The chip records approximately 72 hours (effective running time) of historical data. No data is recorded when the compressor is not in operation. Once the compressor is restarted, the old data will be overwritten by newly recorded data. It is recommended to select the necessary time periods when downloading historical data, as downloading times may depend on the volume of data downloaded.

Step 1: Search for "**Copeland Electronics Module**" in App store and install on your device.
The App is available in both iOS and Android system. iOS users download from App Store and Android users download from Google Play

Copeland Electronics Module
Emerson Climate Technologies, Inc.

Step 2: Enable Bluetooth connection on your device and search for the Copeland electronics module. Select and initiate pairing with "Emerson xxxxxxxx". (Note: The last 8 digits refers to the serial number on each module seen on the module sticker)

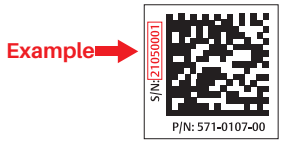

Product features and technical specifications

The control module contains a circuit board that monitors the operation of the refrigeration scroll compressor based on various sensor throughout the compressor. If an unsafe operation is detected, the module will immediately shutdown the compressor by turning off the pilot voltage to the contactor effectively cutting of its power and will display an alarm code.

The module includes 2 design versions for different product platforms:

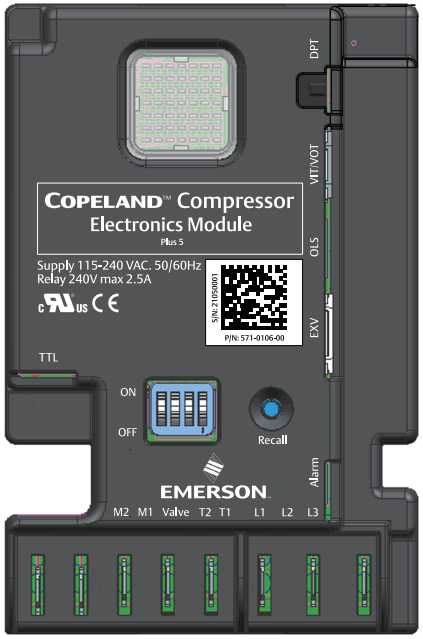

571-0106-00, Plus 5

The ZB150-ZB220, ZFI96-ZFI140 large scroll compressors are equipped with this module. The module (Plus 5 type) is installed in the compressor electrical box. Copeland scroll compressors equipped with this electronic module will have a "R" in the electrical code. Example: ZFI122KQE-TRD.

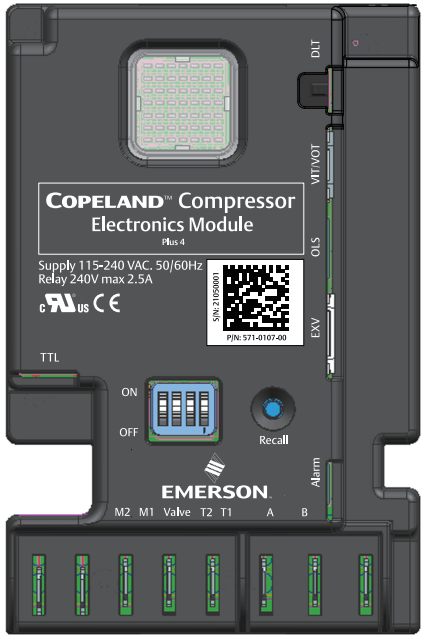

571-0107-00, Plus 4

The liquid injection scroll compressors ZSI06-ZSI21 and vapor injection scroll compressors ZFI09-ZFI81 use this module (Plus 4 type) via its accessory kit package.

Module product specifications:

Module Part Number	571-0106-00	571-0107-00
Type Code	**Plus 5**	**Plus 4**
T1/T2 Power Supply & Frequency	115-240 Vac, 50-60Hz	115-240 Vac, 50-60Hz
Allowable Voltage Range	97 -264 Vac	97-264 Vac
T1/T2 Low Voltage Trip	90/170 Vac	90/170 Vac
T1/T2 Low Voltage Reset	95/185 Vac	95/185 Vac
Power Consumption	25 VA	25 VA
M1/M2 Contact Rating	2.5A, 240Vac	2.5A, 240Vac
Alarm Contact Rating	2.5A, 240Vac	2.5A, 240Vac
Solenoid Valve Contact Rating	0.4A, 240Vac	0.4A, 240Vac
Motor Temperature Overheat Trip Resistance	> 4.5KΩ ± 25%	NA
Open Motor Thermistor Trip Resistance	>220KΩ	NA
Shorted Motor Thermistor Trip Resistance	<40Ω	NA
Motor Temperature Reset Resistance	< 2.75KΩ	NA
Reset Time After Motor Trip	30 minutes	NA
Ambient temperature range	-30° to 70°C	-30° to 70°C
Approvals	UL, CE	UL, CE
Protection Class	IP20	IP20

An explanation of the terminal designations follows:

Terminal	Description	571-0106-00	571-0107-00
		Plus 5	**Plus 4**
T1/T2	Module power supply, 115-240 VAC, 50-60Hz	•	•
L1/L2 /L3	Phase inputs corresponding to compressor input power L1-L2-L3	•	
M1/M2	Normally open control circuit contacts; M2- M1 should be wired in series with the compressor contactor coil	•	
	Connect to compressor contactor coil, On/Off control output		•
A/B	Compressor start/stop demand signal, from low pressure switch or thermostat		•
Valve	Solenoid valve terminal (For oil return in Rack application)	•	•
DPT	Connect to motor and scroll discharge port temperature sensors	•	
DLT	Connect to discharge line temperature sensor		•
VIT/VOT	Vapor in sensor and vapor out sensor terminal (EVI compressor is required)	•	•
OLS	Oil level sensor terminal (Optional, it is required in single unit or rack application)	•	•
EXV	EXV terminal	•	•
Alarm	Alarm terminal, output to buzzer	•	•
TTL	For PC interface and RS485 communication (Require a separated transition board)	•	•
Recall	Recall button to display diagnosis data via LED	•	•

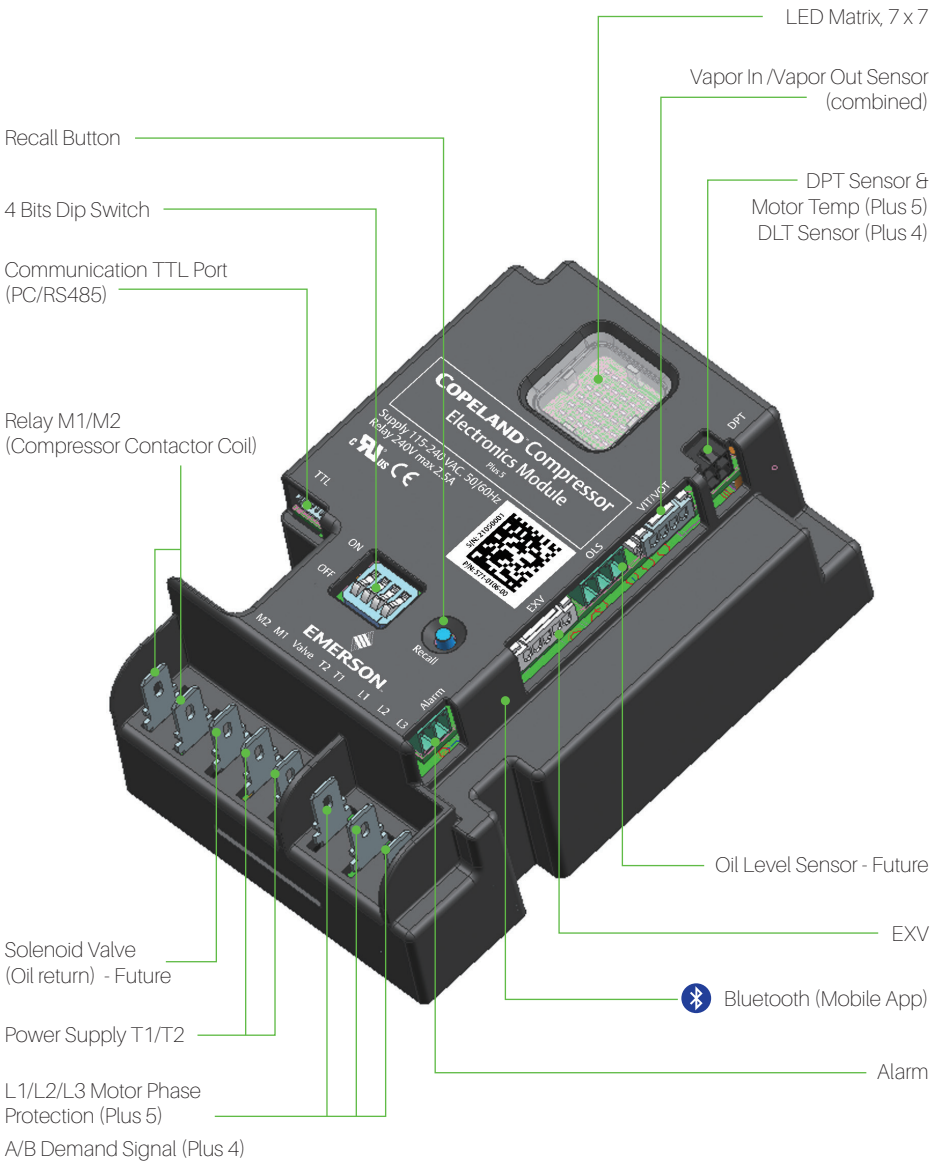

Key Functions	571-0106-00	571-0107-00
	Plus 5	Plus 4
Motor protection		
Motor temperature overheat protection	•	
Locked rotor protection	•	
Motor missing phase protection	•	
Reverse phase protection	•	
Advanced protection		
Discharge temperature overheat protection	•	•
Compressor running short cycling protection	•	•
Module low voltage protection	•	•
Injection control via EXV		
Liquid injection control	•	•
Vapor injection control	•	•
Oil level management (To be released)		
Oil level protection via oil level sensor	•	•
Oil return via solenoid valve	•	•
Diagnosis & data management		
LED matrix display running status and alarm history	•	•
Read the running information	•	•
Download history data (total 72 hours effective running time data storage)	•	•
Communication		
Alarm terminal output to buzzer	•	•
Bluetooth connection to mobile phone	•	•
PC interface or RS485 communication via TTL terminal (To be released)	•	•

Dip-switch setting

Bit 1 dip-switch is used for selecting compressor discharge temperature control target. Bit2 is enable or disable for oil level control. The combination of Bit 3 and Bit 4 is for injection control mode and vapor injection superheat target.



Plus 5 Module: 571-0106-00

Location	Bit 1	Bit 2	Bit 3	Bit 4
OFF	Discharge port temperature control target at 120°C (OFF)	Disable oil level control (OFF)	Disable injection (ON-OFF) Liquid Injection (ON-ON) Vapor Injection 5K Superheat (OFF-OFF) Vapor Injection 10K Superheat (OFF-ON)	
ON	Discharge line temperature control target at 110°C (ON)	Enable oil level control (ON)		

Plus 4 Module: 571-0107-00

Location	Bit 1	Bit 2	Bit 3	Bit 4
OFF	Discharge line temperature control target at 110°C (OFF)	Disable oil level control (OFF)	Disable Injection (ON-OFF) Liquid Injection (ON-ON) Vapor Injection 5K Superheat (OFF-OFF) Vapor Injection 10K Superheat (OFF-ON)	
ON	Discharge line temperature control target at 95°C (ON)	Enable oil level control (ON)		

An example of dip-switch setting in some typical applications:

Plus 5 Module: 571-0106-00

Compressor models	Dip-switch setting				Typical applications
	Bit 1	Bit 2	Bit 3	Bit 4	
ZFI96 ZFI122 ZFI140	OFF	OFF	OFF	OFF	DPT + Vapor Injection 5K **(Default factory setting)**
	Discharge port temperature control target at 120°C	Disable oil level control	Vapor Injection 5K Superheat		
	OFF	OFF	OFF	ON	DPT + Vapor Injection 10K (for glide-refrigerants)
	Discharge port temperature control target at 120°C	Disable oil level control	Vapor Injection 10K Superheat		
	OFF	ON	OFF	OFF	DPT + Vapor Injection 5K + Oil Level Control
	Discharge port temperature control target at 120°C	Enable oil level control	Vapor Injection 5K Superheat		
	OFF	OFF	ON	OFF	DPT + Disable Injection (for customers who do not use Copeland EVI control kits)
	Discharge port temperature control target at 120°C	Disable oil level control	Disable Injection		
ZB150 ZB190 ZB220	OFF	OFF	ON	OFF	DPT + Disable Injection **(Default factory setting)**
	Discharge port temperature control target at 120°C	Disable oil level control	Disable Injection		
	OFF	ON	ON	OFF	DPT + Disable Injection + Oil Level Control
	Discharge port temperature control target at 120°C	Enable oil level control	Disable Injection		
	OFF	OFF	ON	ON	DPT + Liquid Injection (enable liquid injection to suction line)
	Discharge port temperature control target at 120°C	Disable oil level control	Liquid injection		

Plus 4 Module: 571-0107-00

Compressor models	Dip-switch setting				Typical applications
	Bit 1	Bit 2	Bit 3	Bit 4	
ZFI09-ZFI81	OFF	OFF	OFF	OFF	DLT + Vapor Injection 5K **(Default factory setting)**
	Discharge line temperature control target at 110°C	Disable oil level control	Vapor Injection 5K Superheat		
	OFF	OFF	OFF	ON	DLT + Vapor Injection 10K (for glide-refrigerants)
	Discharge line temperature control target at 110°C	Disable oil level control	Vapor Injection 10K Superheat		
	OFF	ON	OFF	OFF	DLT + Vapor Injection 5K + Oil Level Control
	Discharge line temperature control target at 110°C	Enable oil level control	Vapor Injection 5K Superheat		
	OFF	OFF	ON	OFF	Disable Injection (for customers who do not use Copeland EVI control kits)
	Non-functional	Disable oil level control	Disable injection		
ZSI06-ZSI21	OFF	OFF	ON	ON	DLT 110°C + Liquid Injection **(Default factory setting)**
	Discharge line temperature control target at 110°C	Disable oil level control	Liquid injection		
	ON	OFF	ON	ON	DLT 95°C + Liquid Injection
	Discharge line temperature control target at 95°C	Disable oil level control	Liquid injection		
ZB58-ZB114	ON/OFF	ON	ON	OFF	Disable Injection + Oil Level Control
	Non-functional	Enable oil level control	Disable injection		

Alarm code definition and troubleshooting reference

Alarm Code	LED Matrix	Type	Code fault description	Plus 5	Plus 4	Fault condition	Trouble shooting reference
0	ON	NA	Normal operation	•	•	NA	NA
0	Flash	NA	Normal compressor power off	•	•	NA	NA
1	Flash	Trip	Discharge temperature overheating	•	•	≥control target +15°C 10 minutes reset time after trip	1/ Check if refrigerant charge is sufficient or leak in system 2/ Check if superheat is high, confirm refrigerant charge, expansion valve opening and suction tube insulation 3/ Gage high pressure and low pressure, check low pressure setting and high pressure switch 4/ Review liquid or vapor injection system, check if EXV was damaged or blocked 5/ Check compressor, measure the current, maybe wear inside due to lack of oil
2	Flash	Trip	Discharge temperature sensor short circuit	•	•	Ω < 500Ω 10 minutes reset time after trip	1/ Check sensor connection with the module 2/ Check continuity of sensor wiring harness, replace the sensor
			Discharge temperature sensor open circuit	•	•	Ω > 1000KΩ 10 minutes reset time after trip	1/ Check sensor connection with the module 2/ Check continuity of sensor wiring harness, replace the sensor
3	Flash	Warning	Vapor in temperature sensor short circuit	•	•	Ω < 500Ω	1/ Check sensor connection with the module 2/ Check continuity of sensor wiring harness, replace the sensor
			Vapor in temperature sensor open circuit	•	•	Ω > 500KΩ	1/ Check sensor connection with the module 2/ Check continuity of sensor wiring harness, replace the sensor
4	Flash	Warning	Vapor out temperature sensor short circuit	•	•	Ω < 500Ω	1/ Check sensor connection with the module 2/ Check continuity of sensor wiring harness, replace the sensor
			Vapor out temperature sensor open circuit	•	•	Ω > 500KΩ	1/ Check sensor connection with the module 2/ Check continuity of sensor wiring harness, replace the sensor
5	Flash	Warning	Vapor in temperature sensor out of range	•	•	VIT <-40°C or VIT>75°C	1/ Check sensor installation location 2/ Check if refrigerant charge in system is low and if liquid supply to EXV is sufficient
6	Flash	Warning	Vapor out temperature sensor out of range	•	•	VOT <-40°C or VOT>75°C	1/Check sensor installation location 2/Check if refrigerant charge in system is low and if liquid supply to EXV is sufficient
7	Flash	Lockout	Low oil level lockout	•	•	In Development, TBD	TBD
8	Flash	Trip	Module input voltage is low	•	•	< 170/95V; 5 minutes reset time after trip	1/ Check supply voltage 2/ Replace the module
9	Flash	Lockout	Module internal fault	•	•	Module malfunction	1/ Reset power supply of the module 2/ Replace the module
A	Flash	Warning	Module internal Bluetooth component fault	•	•	5 times consecutive communication error	1/ Reset power supply of the module 2/ Replace the module
C	Flash	Lockout	Module version fault	•	•	Internal configuration fault	1/ Replace the module
E	Flash	Trip	Motor temperature sensor overheating	•		Ω > 4.5KΩ 30 minutes reset time after trip	1/ Check supply voltage 2/ Check refrigerant charge in system and superheat 3/ Check if compressor run out of the operating envelope 4/ Check the contactor
F	Flash	Lockout	Motor temperature sensor overheating lockout	•		5 times consecutive trip	1/ Check supply voltage 2/ Check refrigerant charge in system and superheat 3/ Check the contactor

Alarm Code	LED Matrix	Type	Code fault description	Plus 5	Plus 4	Fault condition	Trouble shooting reference
G	Flash	Trip	Motor temperature sensor short circuit	•		Ω < 40Ω 30 minutes reset time after trip	1/ Check sensor connection with the module
			Motor temperature sensor open circuit	•		Ω > 220KΩ 30 minutes reset time after trip	1/ Check sensor connection with the module
H	Flash	Lockout	Motor temperature sensor open circuit lockout	•		Continuously for 6 Hours	1/ Check sensor connection with the module
			Motor temperature sensor short circuit lockout	•		Continuously for 6 Hours	1/ Check sensor connection with the module
J	Flash	Trip	Phase missing	•		5 minutes reset time after trip	1/ Check incoming power supply 2/ Check fuses / breakers 3/ Check contactor
K	Flash	Lockout	Phase missing lockout	•		10 times consecutive trip	1/ Check incoming power supply 2/ Check fuses / breakers 3/ Check contactor
L	Flash	Lockout	Phase reverse lockout	•		Phase Reverse	1/ Check incoming phase sequence 2/ Check contactor 3/ Change module phasing wires L1-L2-L3
M	Flash	Warning	Compressor forced running	•		The module has detected the trip error but compressor is still running	1/ Check contactor contacts 2/ Check if the M1-M2 output is shorted or not 3/ Check if the system control wiring bypass M1-M2 or not
N	Flash	Warning	Compressor short cycling warning (Default)	•	•	Compressor running <1 minute for 1 short cycle and short cycles >48 times in 24 hours	1/ Check refrigerant charge in system and pressure control setting 2/ Check cold room thermostat setting
P	Flash	Lockout	Compressor short cycling lockout (Manual configuration)	•	•	Compressor running <1 minute for 1 short cycle and short cycles >48 times in 24 hours	1/ Check refrigerant charge in system and pressure control setting 2/ Check cold room thermostat setting

Liquid injection and vapor injection control kits

Copeland provides customers with full liquid injection and vapor injection control kits with 1.8m or 4.5m wire lengths.

Liquid injection control kits

Part number with 1.8m wire length[1]	Part number with 4.5m wire length	Applicable ZSI models	EXV valve orifice size (Identification code)
562-0471-00	NA	ZSI06-ZSI21	Ø1.3mm (TS113C03)

Note: (1) 562-0471-00 includes in ZSI compressor bill of materials (BOM536/539)

Vapor injection control kits

Part number with 1.8m wire length	Part number with 4.5m wire length	Applicable ZFI models	EXV valve orifice size (Identification code)
562-0471-01	562-0471-02	ZFI09-ZFI26	Ø1.3mm (TS113C03)
562-0471-03	562-0471-04	ZFI36-ZFI39	Ø1.65mm (TS116C03)
562-0471-05	562-0471-06	ZFI50-ZFI59	Ø1.65mm (TS116C03)
562-0471-07	562-0471-08	ZFI68-ZFI81	Ø1.8mm (TS118C03)
562-0460-00	562-0460-01	ZFI96-ZFI140	Ø2.4mm (TS124C03)

Injection control kits BOMs breakdown

Part number with 1.8m wire length

Applied Compressor		ZSI06-ZSI21	ZFI09-ZFI26	ZFI36-ZFI39	ZFI50-ZFI59	ZFI68-ZFI81	ZFI96-ZFI140
Injection Control Kits		562-0471-00	562-0471-01	562-0471-03	562-0471-05	562-0471-07	562-0460-00
1	Control module	571-0107-00	571-0107-00	571-0107-00	571-0107-00	571-0107-00	with Comp
2	Module bracket	074-1855-00	074-1855-00	074-1855-00	NA	NA	NA
3	Blots group	521-0355-00	521-0355-00	521-0355-00	NA	NA	NA
4	DLT/DPT sensor	543-0317-00	543-0317-00	543-0317-00	543-0317-00	543-0317-00	with Comp
5	Vapor in/out sensor	NA	043-0285-00	043-0285-00	043-0285-00	043-0285-00	043-0285-00
6	EXV filter	013-0212-00	013-0212-00	013-0212-00	013-0212-00	013-0212-00	013-0212-00
7	EXV-coil	023-0111-00	023-0111-00	023-0111-00	023-0111-00	023-0111-00	023-0111-00
8	EXV-valve	010-0240-00	010-0240-00	010-0240-01	010-0240-01	010-0240-02	010-0240-03
9	Gland Cable - single hole	NA	NA	NA	036-1868-00	036-1868-00	036-1868-00
10	Gland Cable - 7 holes	NA	NA	NA	036-1869-00	036-1869-00	036-1869-00
11	Tube for sensor	028-3998-00	028-3998-00	028-3998-00	028-3998-00	028-3998-00	028-3998-00
12	Spring clip	032-0962-00	032-0962-00	032-0962-00	032-0962-00	032-0962-00	032-0962-00
13	Pin connector group	521-0398-00	521-0398-00	521-0398-00	521-0398-00	521-0398-00	521-0398-00

Part number with 4.5m wire length

Applied Compressor		ZSI06-ZSI21	ZFI09-ZFI26	ZFI36-ZFI39	ZFI50-ZFI59	ZFI68-ZFI81	ZFI96-ZFI140
Injection Control Kits		NA	562-0471-02	562-0471-04	562-0471-06	562-0471-08	562-0460-01
1	Control module	NA	571-0107-00	571-0107-00	571-0107-00	571-0107-00	with Comp
2	Module bracket	NA	074-1855-00	074-1855-00	NA	NA	NA
3	Blots group	NA	521-0355-00	521-0355-00	NA	NA	NA
4	DLT/DPT sensor	NA	543-0317-01	543-0317-01	543-0317-01	543-0317-01	with Comp
5	Vapor in/out sensor	NA	043-0285-01	043-0285-01	043-0285-01	043-0285-01	043-0285-01
6	EXV filter	NA	013-0212-00	013-0212-00	013-0212-00	013-0212-00	013-0212-00
7	EXV-coil	NA	023-0111-01	023-0111-01	023-0111-01	023-0111-01	023-0111-01
8	EXV-valve	NA	010-0240-00	010-0240-01	010-0240-01	010-0240-02	010-0240-03
9	Gland cable - single hole	NA	NA	NA	036-1868-00	036-1868-00	036-1868-00
10	Gland cable - 7 holes	NA	NA	NA	036-1869-00	036-1869-00	036-1869-00
11	Tube for sensor	NA	028-3998-00	028-3998-00	028-3998-00	028-3998-00	028-3998-00
12	Spring clip	NA	032-0962-00	032-0962-00	032-0962-00	032-0962-00	032-0962-00
13	Pin connector group	NA	521-0398-00	521-0398-00	521-0398-00	521-0398-00	521-0398-00

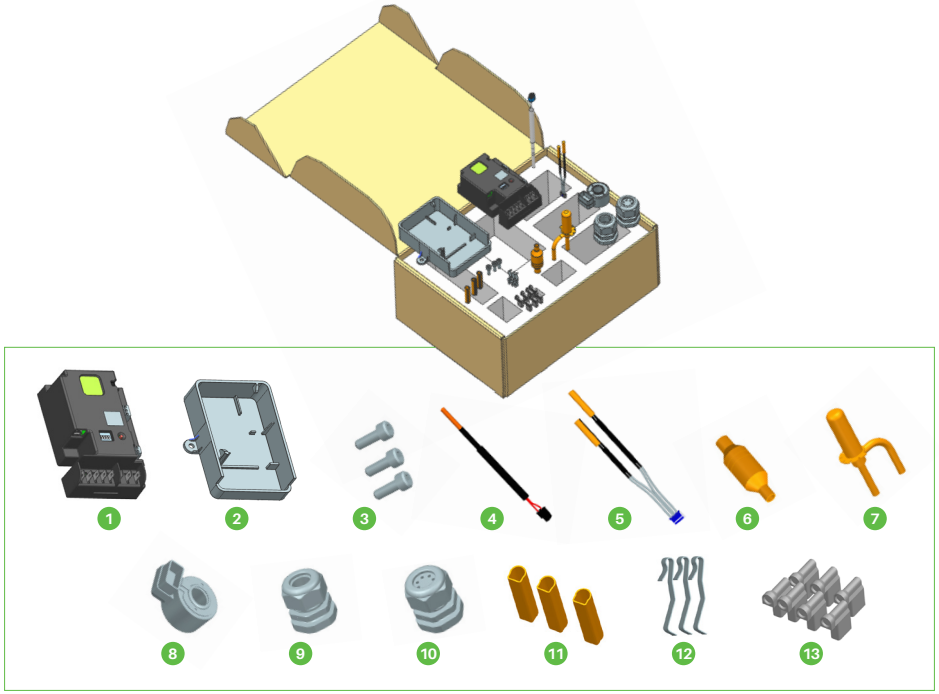



ZFI20-39, ZSI06-21

For ZFI20-39 and ZSI06-21 scroll compressors, the module is installed in a separate bracket box and fixed into the condensing unit system.

Module Bracket

Two holding tabs secure the module in the compressor terminal box or the module bracket box. To remove, depress the holding tabs and lift the module.

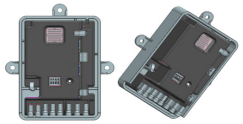



ZFI50-81

For ZFI50-81 Summit scroll compressors, this module could be installed in the compressor terminal box.



ZB150-220, ZFI96-140

For ZB150-220 and ZFI96-140 Large scroll compressors, the module will be shipped already installed in the compressor terminal box.

The new generation Copeland compressor electronics modules are only intended to be used as field retrofits for ZSI liquid injection control modules, ZFI vapor injection control modules, large ZFI scroll P47 CoreSense modules and vapor injection control modules.

Models	Field Retrofit Steps
ZSI06-ZSI21	• Remove the old module kits including control board, transformer, box and DLT sensor • Replace with the new module, module bracket and DLT sensor. EXV can share the old one • Refer to the new wiring diagram
ZFI20-ZFI81	• Remove the old EVI module kits including control board, transformer, box, DLT sensor, Vapor-in sensor and Vapor out sensor • Replace with the new module, module bracket (for ZFI09-ZFI39), cable glands (for ZFI50-ZFI81), DLT sensor and vapor –In/out sensor. EXV can share the same • Refer to the new wiring diagram
ZFI96-ZFI140	• Remove the old EVI module kits including control board, transformer, box, DLT sensor, Vapor-in sensor and Vapor out sensor • Remove the old P47 module in compressor terminal box • Replace with the new module, Vapor–In/out sensor EXV can share the same • Refer to the new wiring diagram

ZSI06-ZSI14 single-phase compressor (plus 4 module)

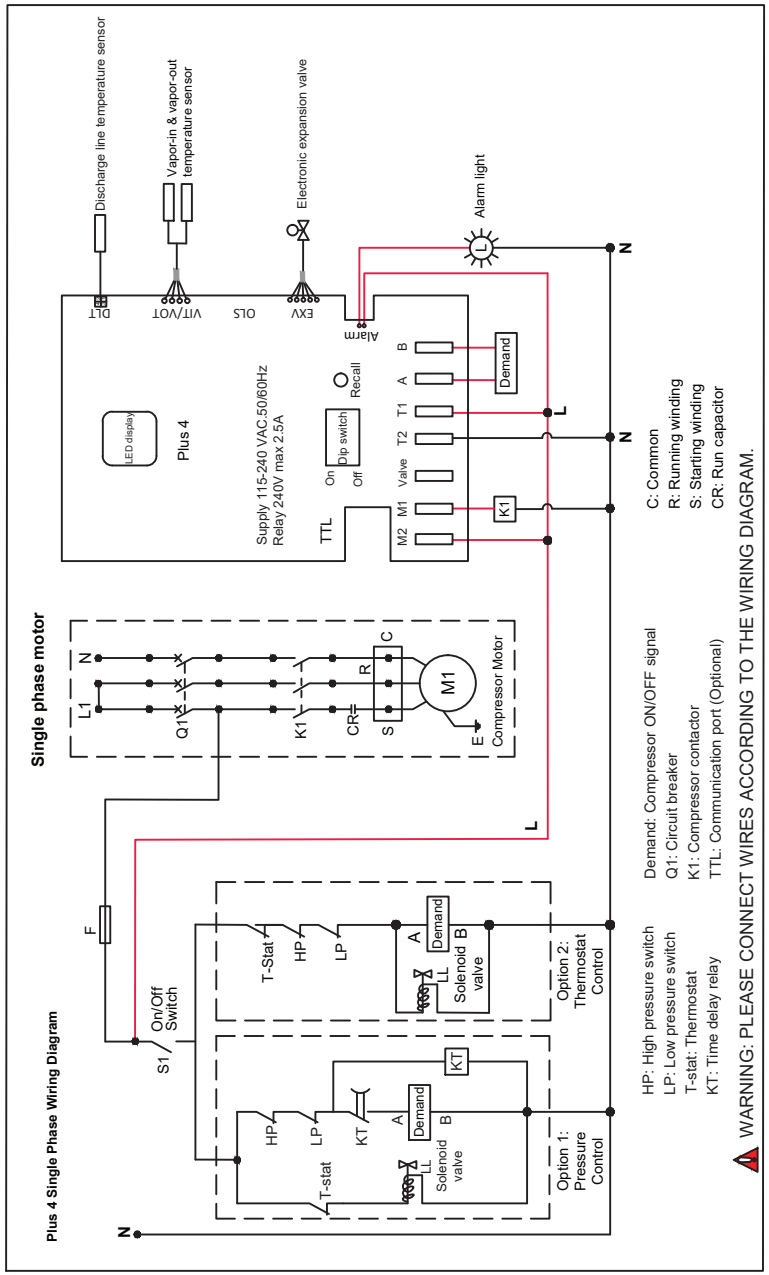

ZSI06-ZSI21, ZFI09-ZFI81 three-phase compressor (plus 4 module)

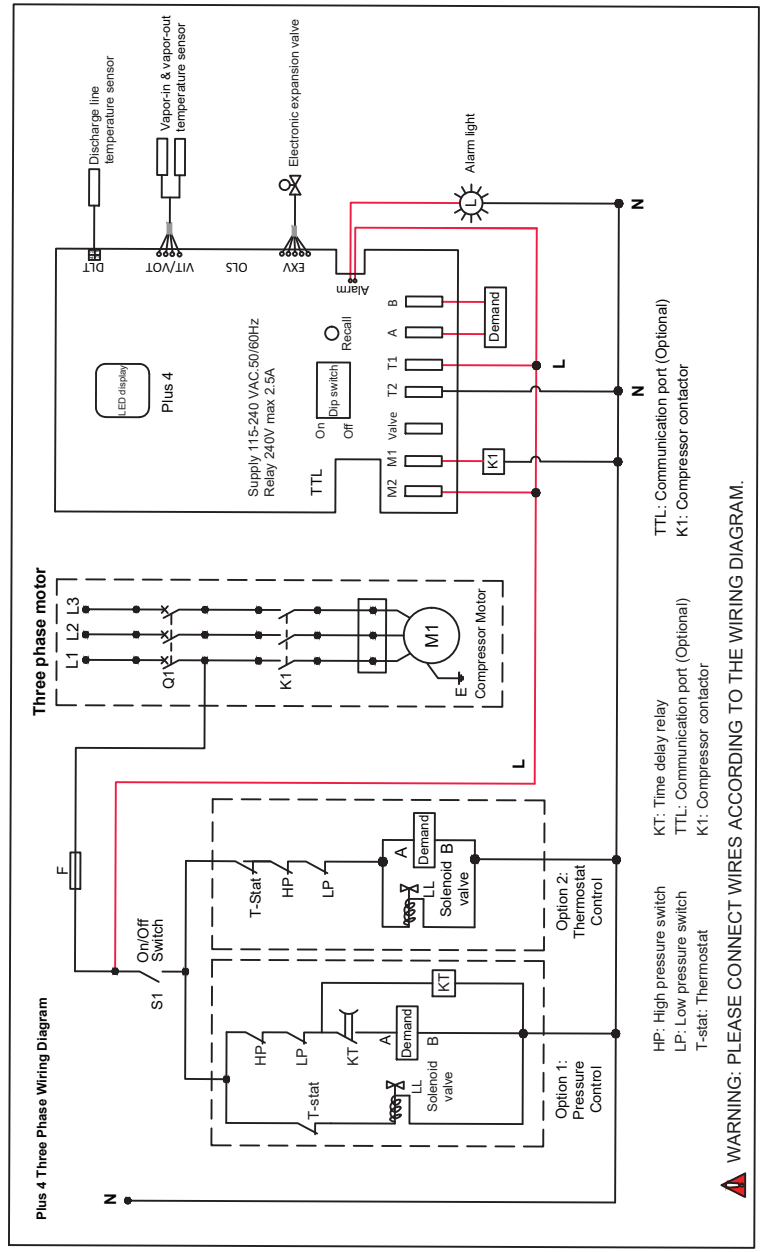

ZFI96-ZFI140 three-phase compressor (plus 5 module)

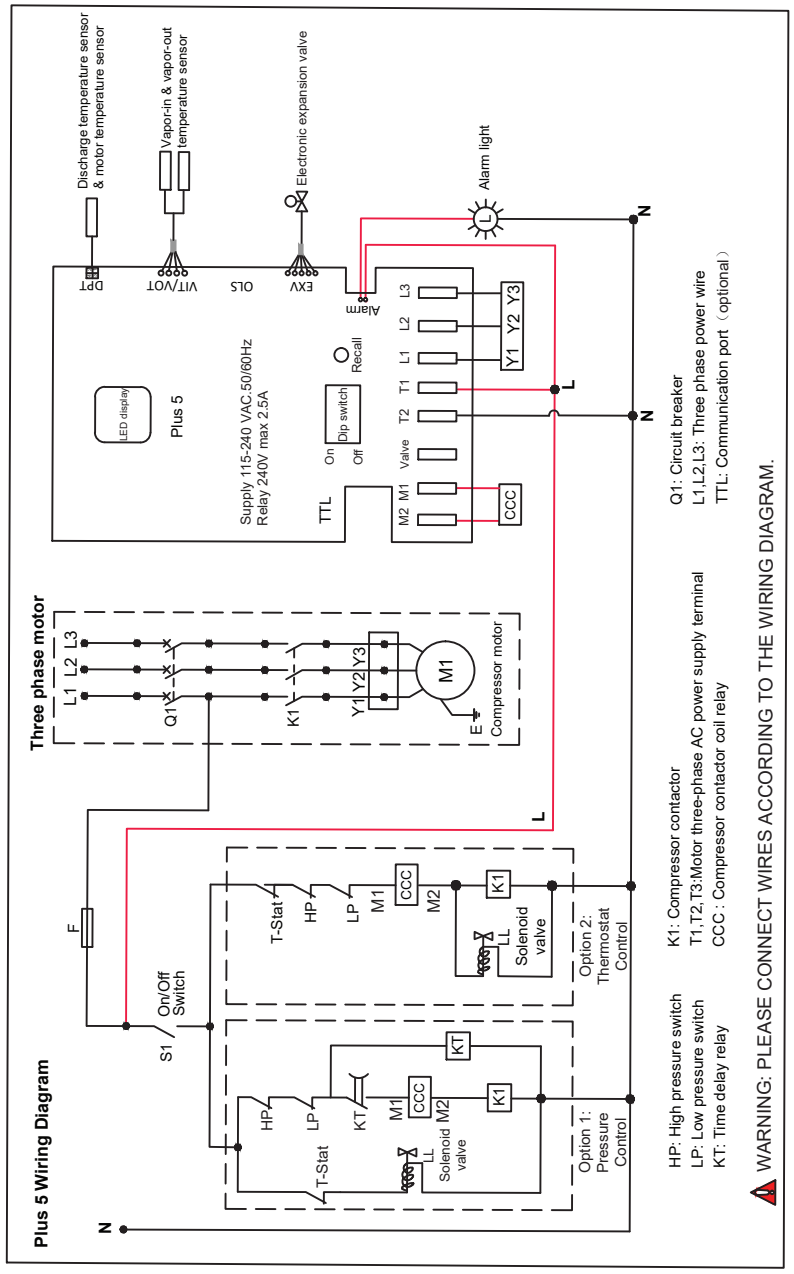

Control Module

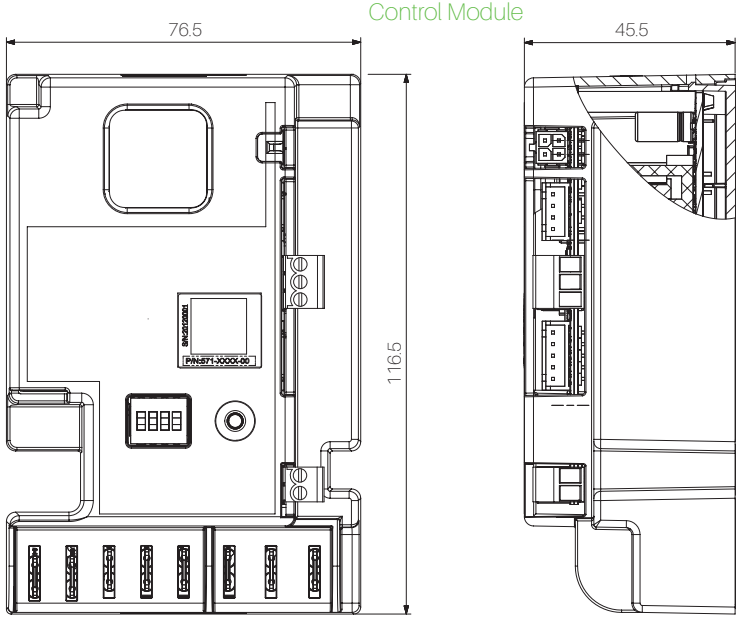

Module Bracket

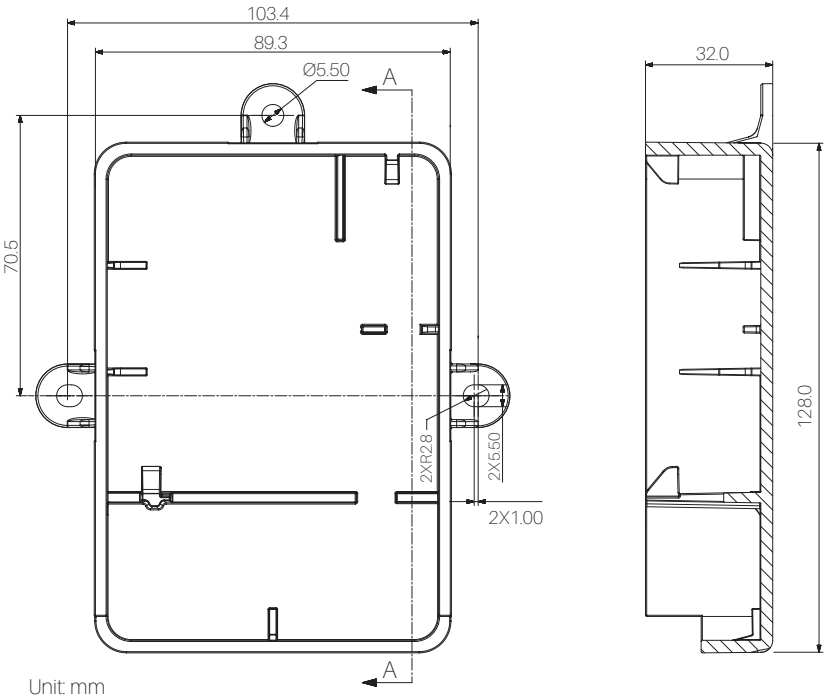

Unit: mm