DRV8802-Q1 汽车用直流电机驱动器集成电路 (IC)

1 特性

- 符合汽车应用要求
- 符合 AEC-Q100 标准的下列结果
  - 器件温度 1 级：-40°C 至 125°C 的环境运行温度范围
  - 器件人体模型 (HBM) 静电放电 (ESD) 分类等级 2
  - 器件充电器件模型 (CDM) ESD 分类等级 C4B
- 双 H 桥电流控制电机驱动器
  - 驱动两个直流电机
  - 制动模式
  - 两个绕组电流控制位支持多达 4 个电流级别
  - 低金属氧化物半导体场效应晶体管 (MOSFET) 导通电阻
- 24V，25°C 时 1.6A 最大驱动电流
- 内置 3.3V 基准输出
- 行业标准并行数字控制接口
- 8V 至 45V 工作电源电压范围
- 耐热增强型表面贴装封装

2 应用

- 汽车制热、通风与空调控制 (HVAC)
- 汽车用阀门
- 车用信息娱乐

3 说明

DRV8802-Q1 器件为汽车应用提供一个集成电机驱动器解决方案。 此器件具有两个 H 桥驱动器，用来驱动直流电机。 每个输出驱动器块由配置为 H 桥的 N 通道功率 MOSFET 组成，以驱动电机绕组。 DRV8802-Q1 器件可为每个 H 桥提供高达 1.6A 的峰值电流或 1.1A 的 RMS 输出电流（在 24V 与 25°C 下提供适当散热功能）。

一个简单的并行数字控制接口与行业标准器件兼容。可对衰减模式进行设定，以便在被禁用时实现电机制动或缓动。

提供针对过流保护、短路保护、欠压闭锁以及过热保护的内部关断功能。

DRV8802-Q1 器件采用具有 PowerPAD™ 的 28 引脚散热薄型小外形尺寸 (HTSSOP) 封装（环保型：符合 RoHS 标准且不含铅/溴）。

器件信息(1)

产品型号	封装	封装尺寸（标称值）
DRV8802-Q1	HTSSOP (28)	9.70mm x 4.40mm

(1) 如需了解所有可用封装，请见数据表末尾的可订购产品附录。

简化应用示意图

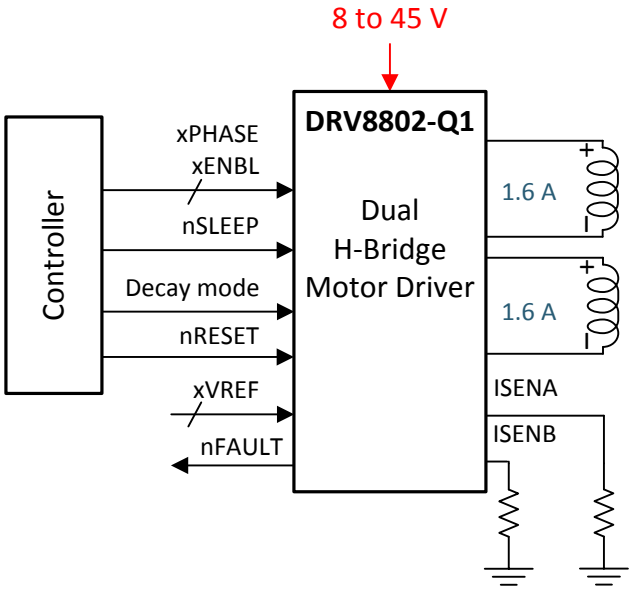

PRODUCTION DATA information is current as of publication date. Products conform to specifications per the terms of the Texas Instruments standard warranty. Production processing does not necessarily include testing of all parameters.

目录

1 特性 ... 1
2 应用 ... 1
3 说明 ... 1
4 修订历史记录 ... 2
5 **Pin Configuration and Functions** ... 3
6 **Specifications** ... 5
6.1 Absolute Maximum Ratings ... 5
6.2 Handling Ratings ... 5
6.3 Recommended Operating Conditions ... 5
6.4 Thermal Information ... 5
6.5 Electrical Characteristics ... 6
6.6 Typical Characteristics ... 7
7 **Detailed Description** ... 8
7.1 Overview ... 8
7.2 Functional Block Diagram ... 8
7.3 Feature Description ... 9
7.4 Device Functional Modes ... 12
8 **Application and Implementation** ... 13
8.1 Application Information ... 13
8.2 Typical Application ... 13
9 **Power Supply Recommendations** ... 15
9.1 Bulk Capacitance ... 15
9.2 Power Supply and Logic Sequencing ... 15
10 **Layout** ... 15
10.1 Layout Guidelines ... 15
10.2 Layout Example ... 16
10.3 Thermal Information ... 16
11 器件和文档支持 ... 18
11.1 Trademarks ... 18
11.2 Electrostatic Discharge Caution ... 18
11.3 术语表 ... 18
12 机械封装和可订购信息 ... 18

4 修订历史记录

日期	修订版本	注释
2014 年 6 月	A	最初发布。

Copyright © 2014, Texas Instruments Incorporated

5 Pin Configuration and Functions

28-Pin HTSSOP With PowerPAD
PWP Package
Top View

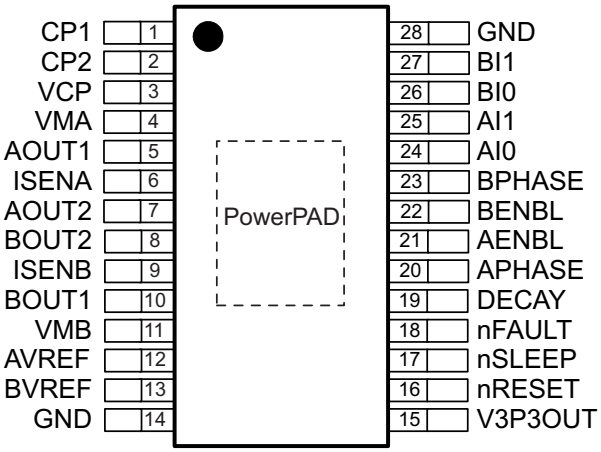

Pin Functions

PIN		TYPE(1)	DESCRIPTION	EXTERNAL COMPONENTS OR CONNECTIONS
NAME	NO.			
POWER AND GROUND				
CP1	1	IO	Charge pump flying capacitor	Connect a 0.01-µF 50-V capacitor between CP1 and CP2.
CP2	2	IO	Charge pump flying capacitor	
GND	14	—	Device ground	
	28			
V3P3OUT	15	O	3.3-V regulator output	Bypass to GND with a 0.47-µF 6.3-V ceramic capacitor. Can be used to supply VREF.
VMA	4	—	Bridge A power supply	Connect to motor supply (8 to 45 V). Both pins must be connected to same supply.
VMB	11	—	Bridge B power supply	
VCP	3	IO	High-side gate drive voltage	Connect a 0.1-µF 16-V ceramic capacitor and a 1-MΩ resistor to VMx.
CONTROL				
AI0	24	I	Bridge A current set	Sets bridge A current: 00 = 100%, 01 = 71%, 10 = 38%, 11 = 0
AI1	25	I		
AENBL	21	I	Bridge A enable	Logic high to enable bridge A
APHASE	20	I	Bridge A phase (direction)	Logic high sets AOUT1 high, AOUT2 low
AVREF	12	I	Bridge A current set reference input	Reference voltage for winding current set. Can be driven individually with an external DAC for microstepping, or tied to a reference (for example, V3P3OUT).
BVREF	13	I	Bridge B current set reference input	
BI0	26	I	Bridge B current set	Sets bridge B current: 00 = 100%, 01 = 71%, 10 = 38%, 11 = 0
BI1	27	I		
BENBL	22	I	Bridge B enable	Logic high to enable bridge B
BPHASE	23	I	Bridge B phase (direction)	Logic high sets BOUT1 high, BOUT2 low
DECAY	19	I	Decay (brake) mode	Low = brake (slow decay), high = coast (fast decay)
nRESET	16	I	Reset input	Active-low reset input initializes internal logic and disables the H-bridge outputs
nSLEEP	17	I	Sleep mode input	Logic high to enable device, logic low to enter low-power sleep mode

(1) I = input, O = output, OZ = tri-state output, OD = open-drain output, IO = input/output

Copyright © 2014, Texas Instruments Incorporated

Pin Functions (continued)

PIN		TYPE[(1)]	DESCRIPTION	EXTERNAL COMPONENTS OR CONNECTIONS
NAME	NO.			
STATUS				
nFAULT	18	OD	Fault	Logic low when in fault condition (overtemperature, overcurrent)
OUTPUT				
AOUT1	5	O	Bridge A output 1	Connect to motor winding A
AOUT2	7	O	Bridge A output 2	
BOUT1	10	O	Bridge B output 1	Connect to motor winding B
BOUT2	8	O	Bridge B output 2	
ISENA	6	IO	Bridge A ground and current sense	Connect to current sense resistor for bridge A
ISENB	9	IO	Bridge B ground and current sense	Connect to current sense resistor for bridge B

Copyright © 2014, Texas Instruments Incorporated

6 Specifications

6.1 Absolute Maximum Ratings

over operating free-air temperature range (unless otherwise noted)[(1)(2)]

			MIN	MAX	UNIT
Power supply voltage	$V_{(VMx)}$		–0.3	47	V
Charge pump voltage	VCP, CP1, CP2		–0.3	$V_{(VMx)}$+7	V
Digital pin voltage	xPHASE, xENBL, nSLEEP, nFAULT, nRESET, xI0, xI1, DECAY		–0.5	7	V
Reference input voltage	$V_{(xVREF)}$		–0.3	4	V
Sense pin voltage	$V_{(ISENx)}$		–0.3	0.8	V
H-bridge output Current	xOUT1, xOUT2, ISENx	Peak motor drive, t < 1 µS	Internally limited		A
		Continuous motor drive[(3)]		1.6	A
Continuous total power dissipation			See the *Power Dissipation* section		
Operating virtual junction temperature, T_J			–40	150	°C
Operating ambient temperature, T_A			–40	125	°C

(1) Stresses beyond those listed under absolute maximum ratings may cause permanent damage to the device. These are stress ratings only, and functional operation of the device at these or any other conditions beyond those indicated under recommended operating conditions is not implied. Exposure to absolute–maximum–rated conditions for extended periods may affect device reliability.
(2) All voltage values are with respect to network ground terminal.
(3) Power dissipation and thermal limits must be observed.

6.2 Handling Ratings

				MIN	MAX	UNIT
T_{stg}	Storage temperature range			–60	150	°C
$V_{(ESD)}$	Electrostatic discharge	Human body model (HBM), per AEC Q100-002[(1)]		–2000	2000	V
		Charged device model (CDM), per AEC Q100-011	Corner pins (1, 14, 15, and 28)	–750	750	
			Other pins	–500	500	

(1) AEC Q100-002 indicates HBM stressing is done in accordance with the ANSI/ESDA/JEDEC JS-001 specification.

6.3 Recommended Operating Conditions

		MIN	MAX	UNIT
$V_{(VMx)}$	Power supply voltage[(1)]	8.2	45	V
$V_{(xVREF)}$	VREF input voltage[(2)]	1	3.5	V
$I_{(OUT1x, OUT2x)}$	H-Bridge Output Current		1.6	A
$I_{L(V3P3OUT)}$	V3P3OUT load current		1	mA

(1) All VMx pins must be connected to the same supply voltage.
(2) Operational at $V_{(xVREF)}$ between 0 V and 1 V, but accuracy is degraded.

6.4 Thermal Information

THERMAL METRIC[(1)]		PWP 28 PINS	UNIT
$R_{\theta JA}$	Junction-to-ambient thermal resistance	38.9	°C/W
$R_{\theta JC(top)}$	Junction-to-case (top) thermal resistance	23.3	
$R_{\theta JB}$	Junction-to-board thermal resistance	21.2	
ψ_{JT}	Junction-to-top characterization parameter	0.8	
ψ_{JB}	Junction-to-board characterization parameter	20.9	
$R_{\theta JC(bot)}$	Junction-to-case (bottom) thermal resistance	2.6	

(1) For more information about traditional and new thermal metrics, see the *IC Package Thermal Metrics* application report, SPRA953.

Copyright © 2014, Texas Instruments Incorporated

6.5 Electrical Characteristics

over operating free-air temp range of -40°C to 125°C (unless otherwise noted)

PARAMETER		TEST CONDITIONS	MIN	TYP	MAX	UNIT
POWER SUPPLIES						
$I_{(VMx)}$	VMx operating supply current	$V_{(VMx)}$ = 24 V, $f_{(PWM)}$ < 50 kHz		5	8	mA
$I_{(VMx_Q)}$	VMx sleep mode supply current	$V_{(VMx)}$ = 24 V		10	20	µA
$V_{(UVLO)}$	VMx undervoltage lockout voltage	$V_{(VMx)}$ rising		7.8	8.2	V
V3P3OUT REGULATOR						
$V_{(V3P3OUT)}$	V3P3OUT voltage	I_O = 0 to 1 mA	3.1	3.3	3.5	V
LOGIC-LEVEL INPUTS						
V_{IL}	Input low voltage				0.7	V
V_{IH}	Input high voltage		2.1			V
V_{hys}	Input hysteresis			0.45		V
I_{IL}	Input low current	V_I = 0	–20		20	µA
I_{IH}	Input high current	V_I = 3.3 V			100	µA
nFAULT OUTPUT (OPEN-DRAIN OUTPUT)						
V_{OL}	Output low voltage	I_O = 5 mA			0.5	V
I_{OH}	Output high leakage current	V_O = 3.3 V			1	µA
DECAY INPUT						
V_{IL}	Input low threshold voltage	For slow decay mode	0		0.8	V
V_{IH}	Input high threshold voltage	For fast decay mode	2			V
I_I	Input current				±40	µA
H-BRIDGE FETS						
$r_{DS(on)}$	HS FET on resistance	V_M = 24 V, I_O = 1 A, T_J = 25°C		0.63		Ω
		V_M = 24 V, I_O = 1 A, T_J = 85°C		0.76	0.9	
		V_M = 24 V, I_O = 1 A, T_J = 125°C		0.85	1	
$r_{DS(on)}$	LS FET on resistance	V_M = 24 V, I_O = 1 A, T_J = 25°C		0.65		Ω
		V_M = 24 V, I_O = 1 A, T_J = 85°C		0.78	0.9	
		V_M = 24 V, I_O = 1 A, T_J = 125°C		0.85	1	
$I_{lkg(OFF)}$	Off-state leakage current		–20		20	µA
MOTOR DRIVER						
$f_{(PWM)}$	Internal PWM frequency			50		kHz
$t_{(blank)}$	Current-sense blanking time			3.75		µs
t_r	Rise time	V_M = 24 V	100		360	ns
t_f	Fall time	V_M = 24 V	80		250	ns
$t_{(dead)}$	Dead time			400		ns
PROTECTION CIRCUITS						
$I_{(OCP)}$	Overcurrent protection trip level		1.8		5	A
$T_{(SD)}$	Thermal shutdown temperature	Die temperature	150	160	180	°C
CURRENT CONTROL						
$I_{(xVREF)}$	xVREF input current	$V_{(xVREF)}$ = 3.3 V	–3		3	µA
$V_{(TRIP)}$	xISENSE trip voltage	$V_{(xVREF)}$ = 3.3 V, 100% current setting	635	660	685	mV
		$V_{(xVREF)}$ = 3.3 V, 71% current setting	445	469	492	
		$V_{(xVREF)}$ = 3.3 V, 38% current setting	225	251	276	
$G_{(ISENx)}$	Current sense amplifier gain	Reference only		5		V/V

Copyright © 2014, Texas Instruments Incorporated

6.6 Typical Characteristics

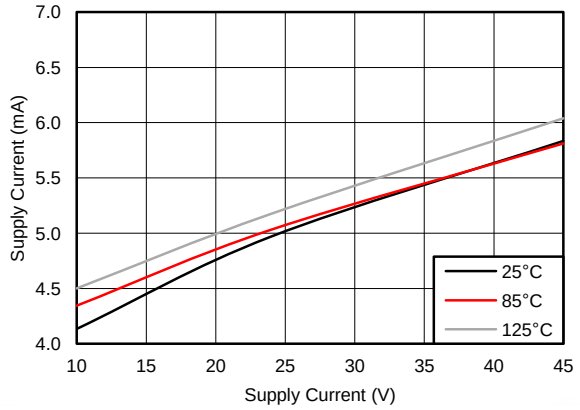

Figure 1. $I_{(VMx)}$ vs $V_{(VMx)}$

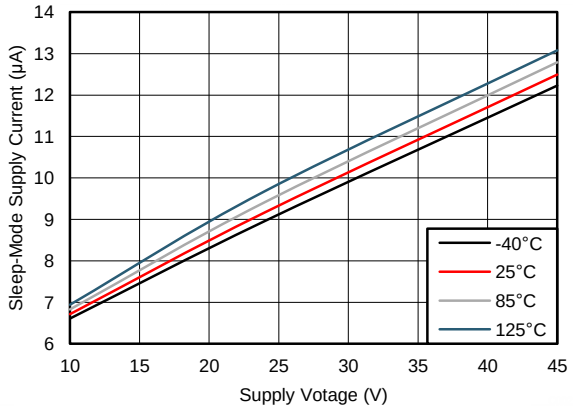

Figure 2. $I_{(VMx_Q)}$ vs $V_{(VMx)}$

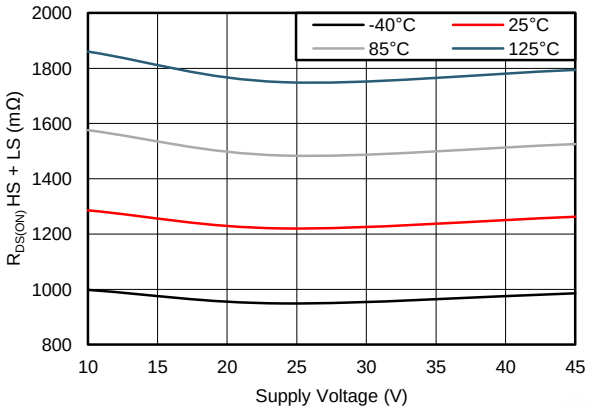

Figure 3. $r_{DS(on)}$ vs $V_{(VMx)}$

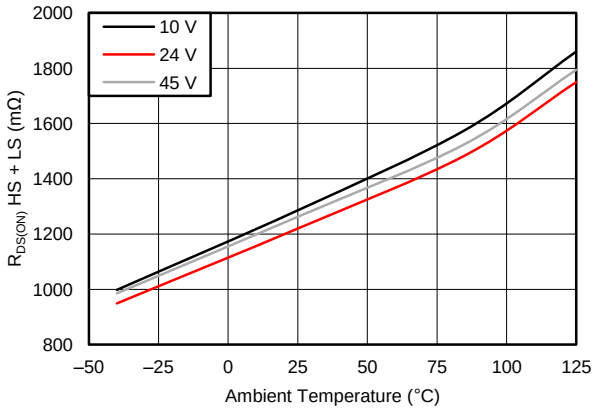

Figure 4. $r_{DS(on)}$ vs Temperature

7 Detailed Description

7.1 Overview

The DRV8802-Q1 device provides an integrated motor driver solution for automotive applications. The device has two H-bridge drivers, and is intended to drive DC motors. The output driver block for each consists of N-channel power MOSFET's configured as H-bridges to drive the motor windings. The DRV8802-Q1 device can supply up to 1.6-A peak or 1.1-A RMS output current (with proper heatsinking at 24 V and 25°C) per H-bridge. A simple parallel digital control interface is compatible with industry-standard devices. Decay mode is programmable to allow braking or coasting of the motor when disabled. Internal shutdown functions are provided for over current protection, short circuit protection, under voltage lockout and overtemperature.

7.2 Functional Block Diagram

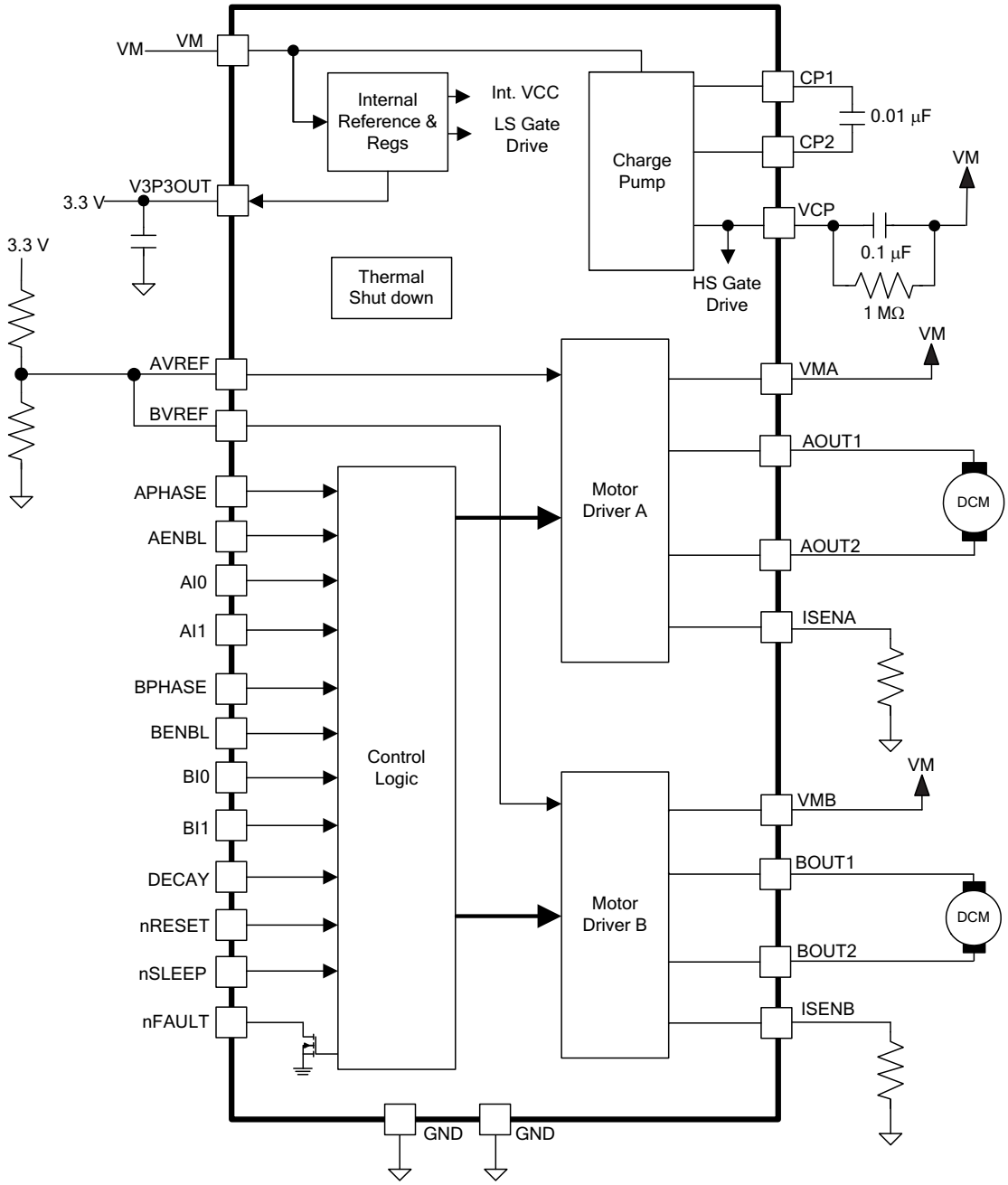

Copyright © 2014, Texas Instruments Incorporated

7.3 Feature Description

7.3.1 PWM Motor Drivers

The DRV8802-Q1 device contains two H-bridge motor drivers with current-control PWM circuitry. Figure 5 shows a block diagram of the motor control circuitry.

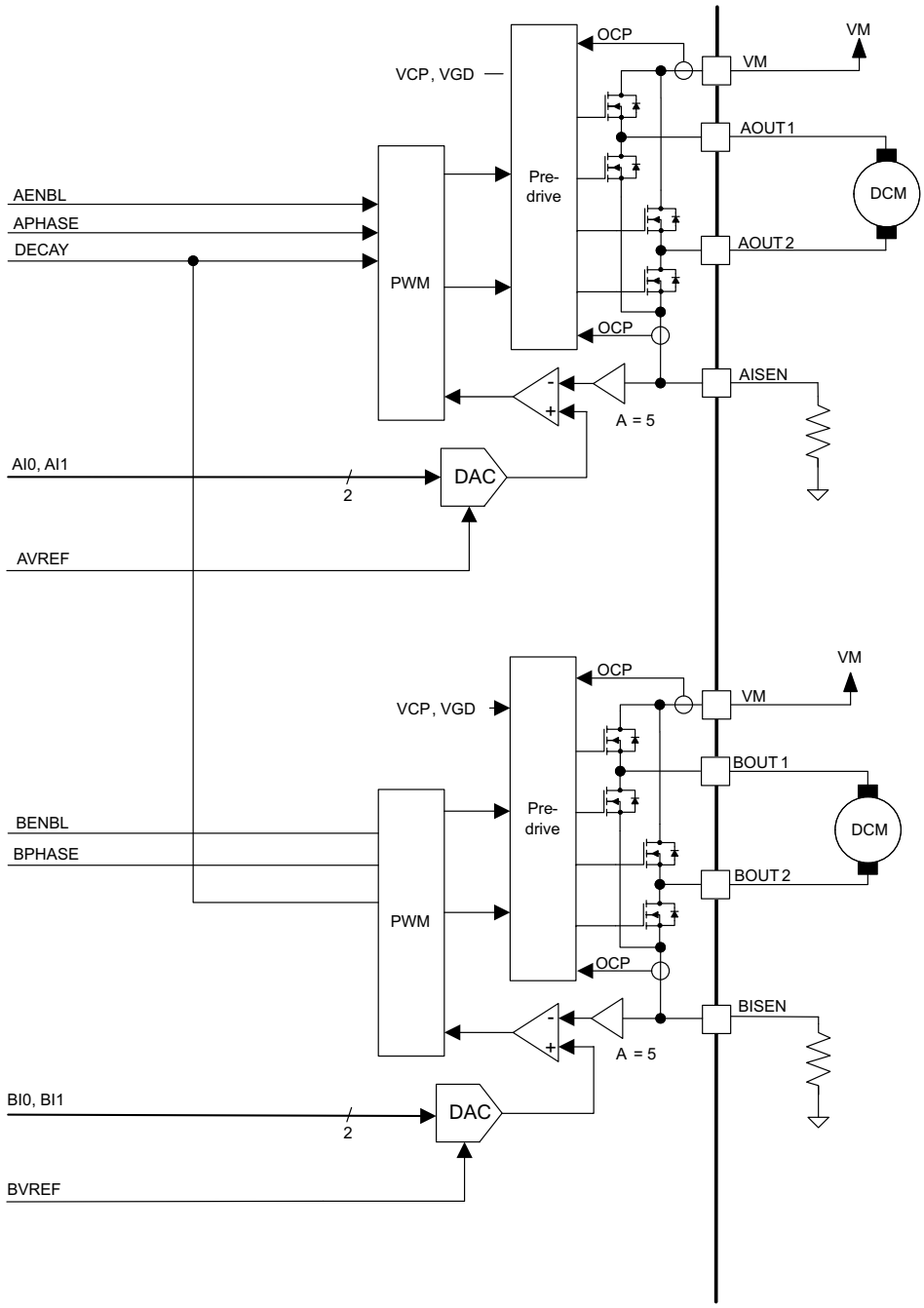

Figure 5. Motor Control Circuitry

Note that there are multiple VM pins (VMx). All VMx pins must be connected together to the motor supply voltage.

Feature Description (continued)

7.3.2 Bridge Control

The xPHASE input pins control the direction of current flow through each H-bridge, and therefore control the direction of rotation of a DC motor. The xENBL input pins enable the H-bridge outputs when active high, and can also be used for PWM speed control of the motor. Table 1 lists the H-bridge logic.

Table 1. H-Bridge Logic

xENBL	xPHASE	xOUT1	xOUT2
0	X	see (1)	see (1)
1	1	H	L
1	0	L	H

(1) Depends on state of the DECAY pin. See the *Decay Mode and Braking* section.

7.3.3 Current Regulation

The current through the motor windings is regulated by a fixed-frequency PWM current regulation, or current chopping. When an H-bridge is enabled, current rises through the winding at a rate dependent on the DC voltage and inductance of the winding. When the current hits the current chopping threshold, the bridge disables the current until the beginning of the next PWM cycle.

For stepping motors, current regulation is normally used at all times, and can change the current that is used to microstep the motor. For DC motors, current regulation is used to limit the start-up and stall current of the motor.

The PWM chopping current is set by a comparator that compares the voltage across a current sense resistor connected to the xISEN pins, multiplied by a factor of 5, with a reference voltage. The reference voltage is input from the xVREF pins, and is scaled by a 2-bit DAC that allows current settings of 38%, 71%, and 100% of full-scale, plus zero.

Use Equation 1 to calculate the full-scale (100%) chopping current.

$$I_{(CHOP)} = \frac{V_{(xVREF)}}{5 \times R_{(ISENx)}} \tag{1}$$

For example:

If a 0.5-Ω sense resistor is used and the voltage on the xVREF pin is 3.3 V, the full-scale (100%) chopping current is 3.3 V / (5 × 0.5 Ω) = 1.32 A.

Two input pins per H-bridge (xI1 and xI0) are used to scale the current in each bridge as a percentage of the full-scale current set by the xVREF input pin and sense resistance. Table 2 lists the function of the pins.

Table 2. H-Bridge Pin Functions

xI1	xI0	RELATIVE CURRENT (% FULL-SCALE CHOPPING CURRENT)
1	1	0% (Bridge disabled)
1	0	38%
0	1	71%
0	0	100%

Note that when both xI bits are 1, the H-bridge is disabled and no current flows.

For example:

If a 0.5-Ω sense resistor is used and the voltage on the xVREF pin is 3.3 V, the chopping current is 1.32 A at the 100% setting (xI1, xI0 = 00). At the 71% setting (xI1, xI0 = 01) the current is 1.32 A × 0.71 = 0.937 A. At the 38% setting (xI1, xI0 = 10) the current is 1.32 A × 0.38 = 0.502 A. If (xI1, xI0 = 11) the bridge is disabled and no current will flow.

Copyright © 2014, Texas Instruments Incorporated

7.3.4 Decay Mode and Braking

During PWM current chopping, the H-bridge is enabled to drive current through the motor winding until the PWM current chopping threshold is reached. See case 1 in Figure 6. The current-flow direction shown indicates the state when the xENBL pin is high.

When the chopping current threshold is reached, the H-bridge can operate in two different states, fast decay or slow decay.

In fast decay mode, when the PWM chopping current level has been reached, the H-bridge reverses state to allow winding current to flow in a reverse direction. As the winding current approaches zero, the bridge is disabled to prevent any reverse current flow. See case 2 in Figure 6 for fast decay mode.

In slow decay mode, winding current is re-circulated by enabling both of the low-side FETs in the bridge. See case 3 in Figure 6.

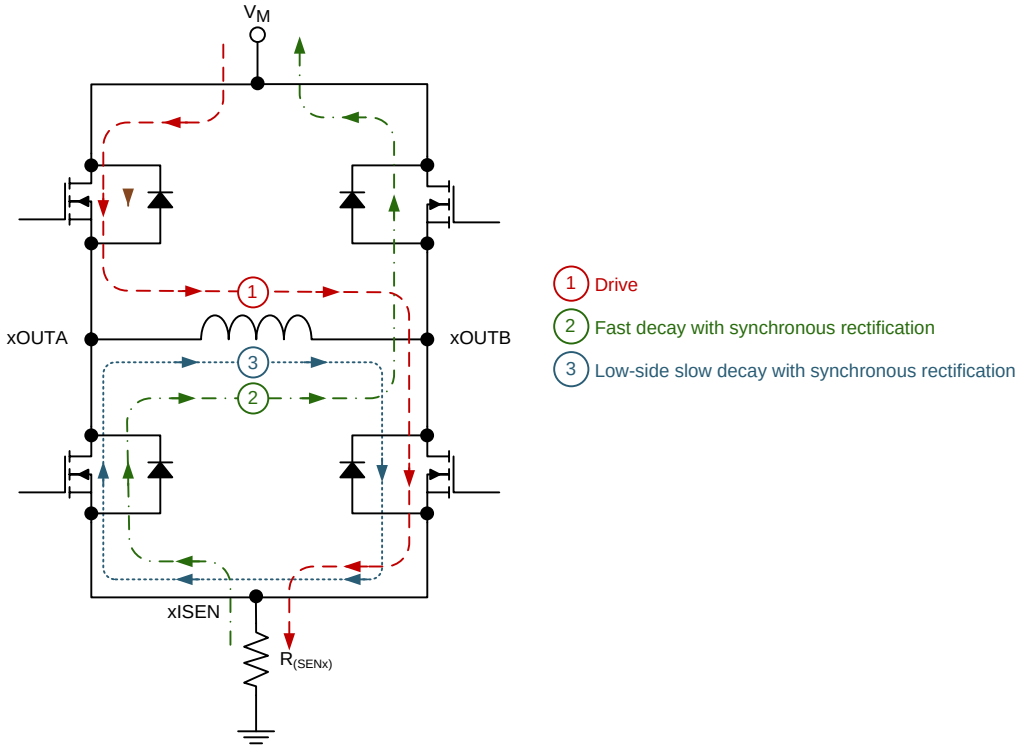

Figure 6. Decay Mode

The DRV8802-Q1 device supports fast decay and slow decay mode. Slow or fast decay mode is selected by the state of the DECAY pin. A logic low selects slow decay, and logic high sets fast decay mode. Note that the DECAY pin sets the decay mode for both H-bridges.

The DECAY mode also affects the operation of the bridge when it is disabled (by taking the ENBL pin inactive). This effect applies if the ENABLE input is being used for PWM speed control of the motor, or if it is simply being used to start and stop motor rotation.

If the DECAY pin is high (fast decay), when the bridge is disabled, all FETs are turned off and decay current flows through the body diodes, allowing the motor to coast to a stop.

If the DECAY pin is low (slow decay), both low-side FETs are turned on when the xENBL pin is made inactive. When the xENBL pin is made inactive, the inactivation essentially shorts out the back EMF of the motor, causing the motor to brake, and stop quickly. The low-side FETs stays in the ON state even after the current reaches zero.

Copyright © 2014, Texas Instruments Incorporated

7.3.5 Blanking Time

After the current is enabled in an H-bridge, the voltage on the xISEN pin is ignored for a fixed period of time before enabling the current sense circuitry. This blanking time is fixed at 3.75 µs. Note that the blanking time also sets the minimum on time of the PWM.

7.3.6 nRESET and nSLEEP Operation

The nRESET pin, when driven active low, resets the internal logic. This pin also disables the H-bridge drivers. All inputs are ignored while nRESET is active.

Driving nSLEEP low puts the device into a low power sleep state. In this state, the H-bridges are disabled, the gate drive charge pump is stopped, the V3P3OUT regulator is disabled, and all internal clocks are stopped. In this state all inputs are ignored until nSLEEP returns inactive high. When returning from sleep mode, some time (approximately 1 ms) must pass before the motor driver becomes fully operational.

7.3.7 Protection Circuits

The DRV8802-Q1 device is fully protected against undervoltage, overcurrent, and overtemperature events.

FAULT	ERROR REPORT	H-BRIDGE	CHARGE PUMP	RECOVERY
$V_{(VMx)}$ undervoltage (UVLO)	No error report – nFAULT is hi-Z	Disabled	Shut Down	$V_{(VMx)}$ > VUVLO RISING
Overcurrent (OCP)	nFAULT pulled low	Disabled	Operating	Retry time, $t_{(OCP)}$
Overtemperature Shutdown (OTS)	nFAULT remains pulled low (set during OTW)	Disabled	Shut Down	$T_J < T_{(OTS)} – T_{hys(OTS)}$

7.3.7.1 Overcurrent Protection (OCP)

An analog current-limit circuit on each FET limits the current through the FET by removing the gate drive. If this analog current-limit persists for longer than the OCP time, all FETs in the H-bridge are disabled and the nFAULT pin is driven low. The device remains disabled until either nRESET pin is applied, or $V_{(VMx)}$ is removed and re-applied.

Overcurrent conditions on both high-side and low-side devices (such as a short to ground, supply, or across the motor winding) result in an overcurrent shutdown. Note that overcurrent protection does not use the current sense circuitry used for PWM current control and is independent of the $R_{(ISENx)}$ resistor value or xVREF voltage.

7.3.7.2 Thermal Shutdown (TSD)

If the die temperature exceeds the thermal shutdown temperature limit, all FETs in the H-bridge are disabled and the nFAULT pin is driven low. When the die temperature has fallen below the temperature hsyteresis level, operation resumes automatically.

7.3.7.3 Undervoltage Lockout (UVLO)

If at any time the voltage on the VMx pins falls below the undervoltage lockout threshold voltage, all circuitry in the device is disabled and internal logic resets. Operation resumes when V_M rises above the UVLO threshold.

7.4 Device Functional Modes

The DRV8802-Q1 device is active unless the nSLEEP pin is brought logic low. In sleep mode the charge pump is disabled, the V3P3OUT regulator is disabled, and the H-bridge FETs are disabled hi-Z. The DRV8802-Q1 is brought out of sleep mode when nSLEEP is brought logic high.

Copyright © 2014, Texas Instruments Incorporated

8 Application and Implementation

8.1 Application Information

The DRV8802-Q1 device is used in medium voltage brushed-DC motor control applications.

8.2 Typical Application

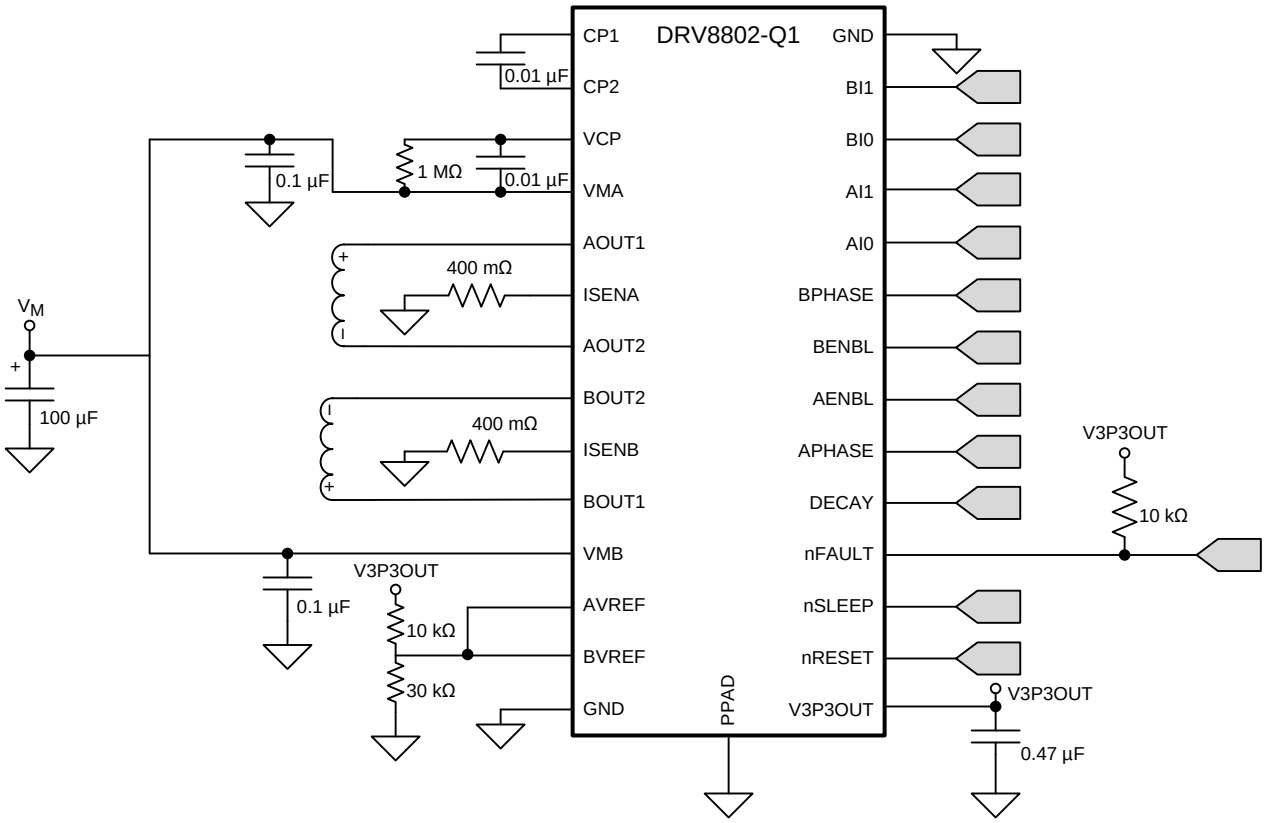

Figure 7. Typical Application Diagram

8.2.1 Design Requirements

The example supply for this design is $V_{(VMx)}$ = 18 V.

8.2.2 Detailed Design Procedure

8.2.2.1 Drive Current

The current path is through the high-side sourcing DMOS driver, motor winding, and low-side sinking DMOS power driver. Power dissipation I^2R losses in one source and sink DMOS driver are shown in Equation 2.

$$P_D = I^2(r_{DS(on)Source} + r_{DS(on)Sink}) \tag{2}$$

8.2.2.2 Slow-Decay SR (Brake Mode)

In slow-decay mode, both low-side sinking drivers turn on, allowing the current to circulate through the low side of the H-bridge (two sink drivers) and the load. Power dissipation I^2R loses in the two sink DMOS drivers as shown in Equation 3.

$$P_D = I^2(2 \times r_{DS(on)Sink}) \tag{3}$$

Copyright © 2014, Texas Instruments Incorporated

Typical Application (continued)

8.2.3 Application Curves

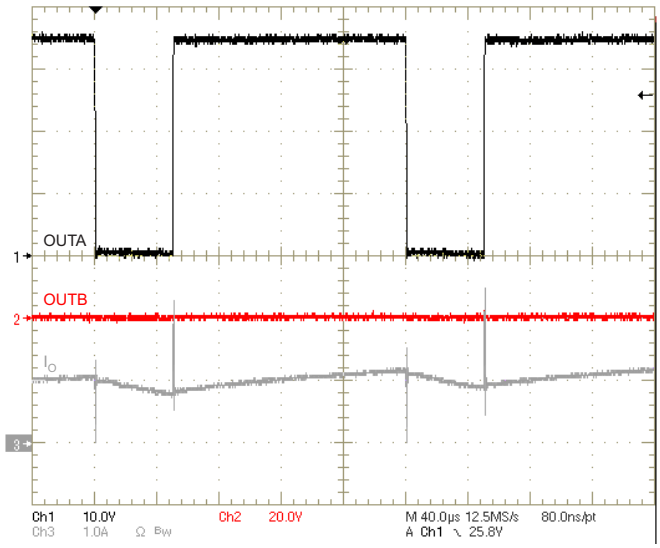

Figure 8. 75% Drive, 25% Slow Decay; $f_{(PWM)}$ = 5 kHz

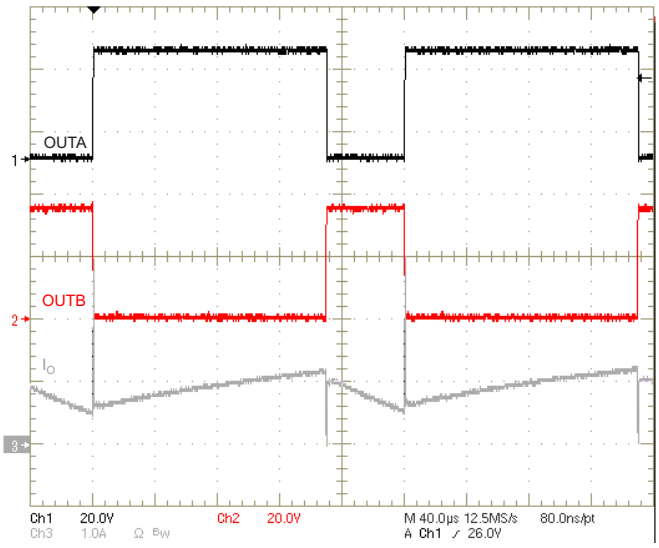

Figure 9. 75% Drive, 25% Fast Decay; $f_{(PWM)}$ = 5 kHz

Copyright © 2014, Texas Instruments Incorporated

9 Power Supply Recommendations

The DRV8802-Q1 is designed to operate from an input voltage supply $V_{(VMx)}$ range between 8.2 and 45 V. Two 0.1-µF ceramic capacitors rated for $V_{(VMx)}$ must be placed as close as possible to the VMA and VMB pins respectively (one on each pin). In addition to the local decoupling caps, additional bulk capacitance is required and must be sized accordingly to the application requirements.

9.1 Bulk Capacitance

Bulk capacitance sizing is an important factor in motor drive system design. It is dependent on a variety of factors including:

- Type of power supply
- Acceptable supply voltage ripple
- Parasitic inductance in the power supply wiring
- Type of motor (Brushed DC, Brushless DC, Stepper)
- Motor startup current
- Motor braking method

The inductance between the power supply and motor drive system will limit the rate current can change from the power supply. If the local bulk capacitance is too small, the system will respond to excessive current demands or dumps from the motor with a change in voltage. You should size the bulk capacitance to meet acceptable voltage ripple levels. The datasheet generally provides a recommended value but system level testing is required to determine the appropriate sized bulk capacitor.

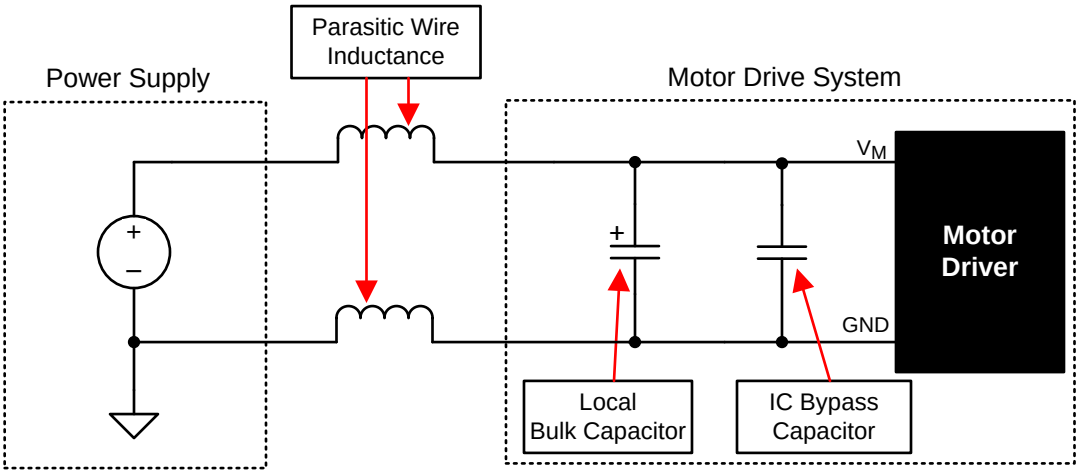

Figure 10. Example Setup of Motor Drive System WIth External Power Supply

9.2 Power Supply and Logic Sequencing

No specific sequence exists for powering-up the DRV8802-Q1 device. Digital input signals can be present before $V_{(VMx)}$ is applied. After $V_{(VMx)}$ is applied to the DRV8802-Q1 device, it begins operation based on the status of the control pins.

10 Layout

10.1 Layout Guidelines

The VMA and VMB pins should be bypassed to GND using low-ESR ceramic bypass capacitors with a recommended value of 0.1-µF rated for VM. This capacitor should be placed as close to the VMA and VMB pins as possible with a thick trace or ground plane connection to the device GND pin. The VMA and VMB pins must be bypassed to ground using an appropriate bulk capacitor. This component may be an electrolytic and should be located close to the DRV8802-Q1. A low-ESR ceramic capacitor must be placed in between the CPL and

Copyright © 2014, Texas Instruments Incorporated

Layout Guidelines (continued)

CPH pins. TI recommends a value of 0.01-µF rated for VM. Place this component as close to the pins as possible. A low-ESR ceramic capacitor must be placed in between the VMA and VCP pins. TI recommends a value of 0.1-µF rated for 16 V. Place this component as close to the pins as possible. Also, place a 1-MΩ resistor between VCP and VMA. Bypass V3P3 to ground with a ceramic capacitor rated 6.3 V. Place this bypass capacitor as close to the pin as possible.

10.2 Layout Example

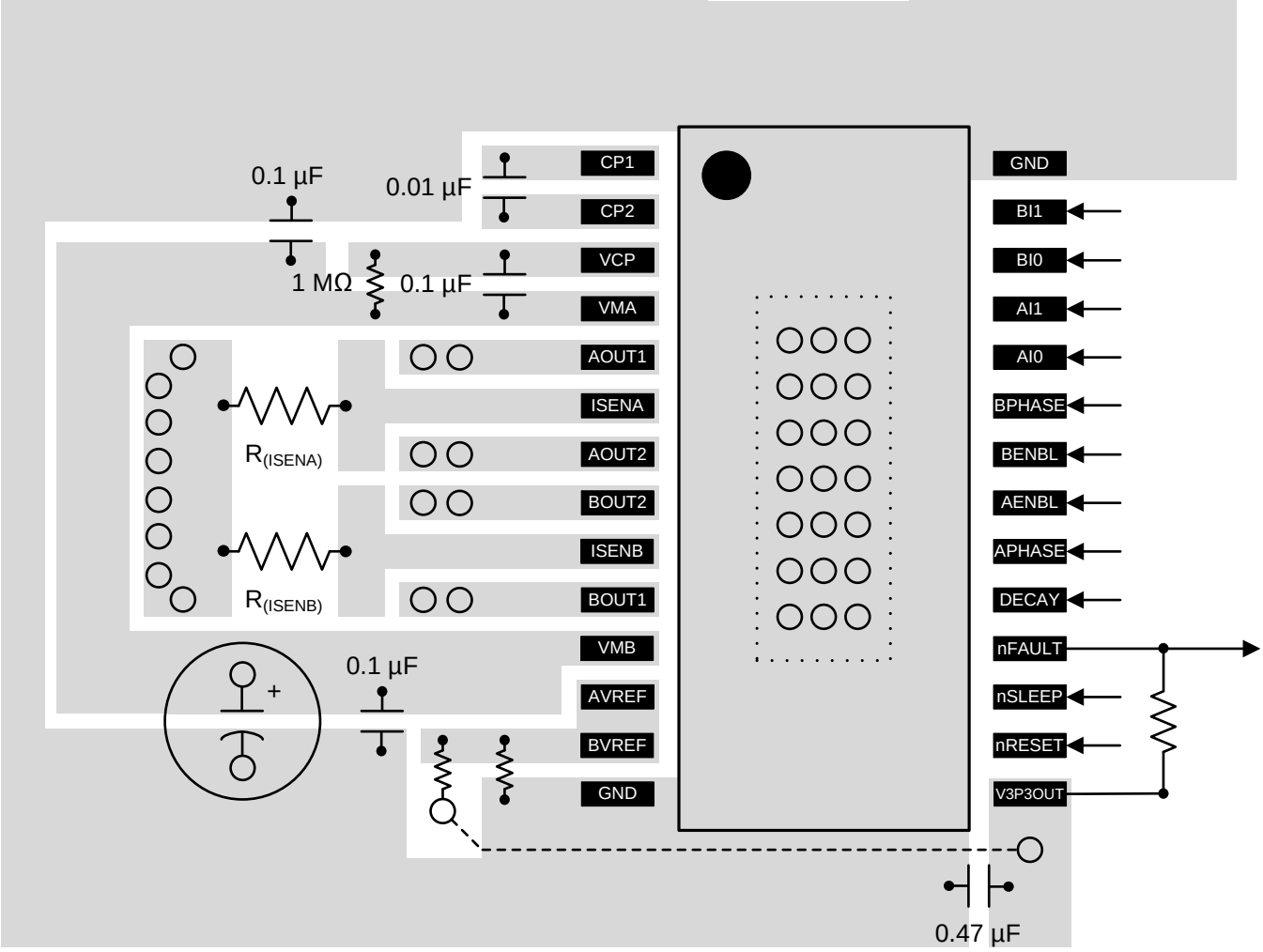

Figure 11. DRV8802-Q1 Layout Example

10.3 Thermal Information

10.3.1 Thermal Protection

The DRV8802-Q1 device has thermal shutdown (TSD) as described in the *Thermal Shutdown (TSD)* section. If the die temperature exceeds approximately 150°C, the device is disabled until the temperature drops below the hysteresis level.

Any tendency of the device to enter TSD is an indication of either excessive power dissipation, insufficient heatsinking, or too high an ambient temperature.

Copyright © 2014, Texas Instruments Incorporated

Thermal Information (continued)

10.3.2 Power Dissipation

Power dissipation in the DRV8802-Q1 device is dominated by the power dissipated in the output FET resistance, or $r_{DS(on)}$. Use Equation 4 to calculate the estimated average power dissipation of each H-bridge when running a DC motor.

$$P_D = 2 \times r_{DS(on)} \times I_O^2$$

where

- P_D is the power dissipation of one H-bridge
- $r_{DS(on)}$ is the resistance of each FET
- I_O is the RMS output current being applied to each winding (4)

I_O is equal to the average current drawn by the DC motor. Note that at startup and fault conditions this current is much higher than normal running current; these peak currents and the current duration must also be considered. The factor of 2 exists because at any instant two FETs are conducting winding current (one high-side and one low-side).

The total device dissipation is the power dissipated in each of the two H-bridges added together.

The maximum amount of power that can be dissipated in the device is dependent on ambient temperature and heatsinking.

NOTE

$r_{DS(on)}$ increases with temperature, so as the device heats, the power dissipation increases. This fact must be taken into consideration when sizing the heatsink.

10.3.3 Heatsinking

The PowerPAD package uses an exposed pad to remove heat from the device. For proper operation, this pad must be thermally connected to copper on the PCB to dissipate heat. On a multi-layer PCB with a ground plane, this connection can be accomplished by adding a number of vias to connect the thermal pad to the ground plane. On PCBs without internal planes, a copper area can be added on either side of the PCB to dissipate heat. If the copper area is on the opposite side of the PCB from the device, thermal vias are used to transfer the heat between top and bottom layers.

For details about how to design the PCB, refer to the TI application report, *PowerPAD™ Thermally Enhanced Package* (SLMA002), "" and the TI application brief, *PowerPAD Made Easy™* (SLMA004), available at www.ti.com.

In general, the more copper area that can be provided, the more power can be dissipated.

Copyright © 2014, Texas Instruments Incorporated

11 器件和文档支持

11.1 Trademarks

PowerPAD is a trademark of Texas Instruments.
All other trademarks are the property of their respective owners.

11.2 Electrostatic Discharge Caution

These devices have limited built-in ESD protection. The leads should be shorted together or the device placed in conductive foam during storage or handling to prevent electrostatic damage to the MOS gates.

11.3 术语表

SLYZ022 — *TI 术语表*。

这份术语表列出并解释术语、首字母缩略词和定义。

12 机械封装和可订购信息

以下页中包括机械封装和可订购信息。 这些信息是针对指定器件可提供的最新数据。 这些数据会在无通知且不对本文档进行修订的情况下发生改变。 欲获得该数据表的浏览器版本，请查阅左侧的导航栏。

Copyright © 2014, Texas Instruments Incorporated

重要声明

德州仪器(TI) 及其下属子公司有权根据 JESD46 最新标准, 对所提供的产品和服务进行更正、修改、增强、改进或其它更改， 并有权根据 JESD48 最新标准中止提供任何产品和服务。客户在下订单前应获取最新的相关信息, 并验证这些信息是否完整且是最新的。所有产品的销售都遵循在订单确认时所提供的TI 销售条款与条件。

TI 保证其所销售的组件的性能符合产品销售时 TI 半导体产品销售条件与条款的适用规范。仅在 TI 保证的范围内，且 TI 认为 有必要时才会使用测试或其它质量控制技术。除非适用法律做出了硬性规定，否则没有必要对每种组件的所有参数进行测试。

TI 对应用帮助或客户产品设计不承担任何义务。客户应对其使用 TI 组件的产品和应用自行负责。为尽量减小与客户产品和应 用相关的风险，客户应提供充分的设计与操作安全措施。

TI 不对任何 TI 专利权、版权、屏蔽作品权或其它与使用了 TI 组件或服务的组合设备、机器或流程相关的 TI 知识产权中授予 的直接或隐含权限作出任何保证或解释。TI 所发布的与第三方产品或服务有关的信息，不能构成从 TI 获得使用这些产品或服 务的许可、授权、或认可。使用此类信息可能需要获得第三方的专利权或其它知识产权方面的许可，或是 TI 的专利权或其它 知识产权方面的许可。

对于 TI 的产品手册或数据表中 TI 信息的重要部分，仅在没有对内容进行任何篡改且带有相关授权、条件、限制和声明的情况 下才允许进行复制。TI 对此类篡改过的文件不承担任何责任或义务。复制第三方的信息可能需要服从额外的限制条件。

在转售 TI 组件或服务时，如果对该组件或服务参数的陈述与 TI 标明的参数相比存在差异或虚假成分，则会失去相关 TI 组件 或服务的所有明示或暗示授权，且这是不正当的、欺诈性商业行为。TI 对任何此类虚假陈述均不承担任何责任或义务。

客户认可并同意，尽管任何应用相关信息或支持仍可能由 TI 提供，但他们将独力负责满足与其产品及在其应用中使用 TI 产品 相关的所有法律、法规和安全相关要求。客户声明并同意，他们具备制定与实施安全措施所需的全部专业技术和知识，可预见 故障的危险后果、监测故障及其后果、降低有可能造成人身伤害的故障的发生机率并采取适当的补救措施。客户将全额赔偿因 在此类安全关键应用中使用任何 TI 组件而对 TI 及其代理造成的任何损失。

在某些场合中，为了推进安全相关应用有可能对 TI 组件进行特别的促销。TI 的目标是利用此类组件帮助客户设计和创立其特 有的可满足适用的功能安全性标准和要求的终端产品解决方案。尽管如此，此类组件仍然服从这些条款。

TI 组件未获得用于 FDA Class III（或类似的生命攸关医疗设备）的授权许可，除非各方授权官员已经达成了专门管控此类使 用的特别协议。

只有那些 TI 特别注明属于军用等级或“增强型塑料”的 TI 组件才是设计或专门用于军事/航空应用或环境的。购买者认可并同 意，对并非指定面向军事或航空航天用途的 TI 组件进行军事或航空航天方面的应用，其风险由客户单独承担，并且由客户独 力负责满足与此类使用相关的所有法律和法规要求。

TI 已明确指定符合 ISO/TS16949 要求的产品，这些产品主要用于汽车。在任何情况下，因使用非指定产品而无法达到 ISO/TS16949 要求，TI不承担任何责任。

	产品		应用
数字音频	www.ti.com.cn/audio	通信与电信	www.ti.com.cn/telecom
放大器和线性器件	www.ti.com.cn/amplifiers	计算机及周边	www.ti.com.cn/computer
数据转换器	www.ti.com.cn/dataconverters	消费电子	www.ti.com/consumer-apps
DLP® 产品	www.dlp.com	能源	www.ti.com/energy
DSP - 数字信号处理器	www.ti.com.cn/dsp	工业应用	www.ti.com.cn/industrial
时钟和计时器	www.ti.com.cn/clockandtimers	医疗电子	www.ti.com.cn/medical
接口	www.ti.com.cn/interface	安防应用	www.ti.com.cn/security
逻辑	www.ti.com.cn/logic	汽车电子	www.ti.com.cn/automotive
电源管理	www.ti.com.cn/power	视频和影像	www.ti.com.cn/video
微控制器 (MCU)	www.ti.com.cn/microcontrollers		
RFID 系统	www.ti.com.cn/rfidsys		
OMAP应用处理器	www.ti.com/omap		
无线连通性	www.ti.com.cn/wirelessconnectivity	德州仪器在线技术支持社区	www.deyisupport.com

邮寄地址： 上海市浦东新区世纪大道1568 号，中建大厦32 楼邮政编码： 200122
Copyright © 2014, 德州仪器半导体技术（上海）有限公司

PACKAGING INFORMATION

Orderable Device	Status (1)	Package Type	Package Drawing	Pins	Package Qty	Eco Plan (2)	Lead/Ball Finish (6)	MSL Peak Temp (3)	Op Temp (°C)	Device Marking (4/5)	Samples
DRV8802QPWPRQ1	ACTIVE	HTSSOP	PWP	28	2000	Green (RoHS & no Sb/Br)	CU NIPDAU	Level-3-260C-168 HR	-40 to 125	DRV8802Q1	Samples

(1) The marketing status values are defined as follows:
ACTIVE: Product device recommended for new designs.
LIFEBUY: TI has announced that the device will be discontinued, and a lifetime-buy period is in effect.
NRND: Not recommended for new designs. Device is in production to support existing customers, but TI does not recommend using this part in a new design.
PREVIEW: Device has been announced but is not in production. Samples may or may not be available.
OBSOLETE: TI has discontinued the production of the device.

(2) Eco Plan - The planned eco-friendly classification: Pb-Free (RoHS), Pb-Free (RoHS Exempt), or Green (RoHS & no Sb/Br) - please check http://www.ti.com/productcontent for the latest availability information and additional product content details.
TBD: The Pb-Free/Green conversion plan has not been defined.
Pb-Free (RoHS): TI's terms "Lead-Free" or "Pb-Free" mean semiconductor products that are compatible with the current RoHS requirements for all 6 substances, including the requirement that lead not exceed 0.1% by weight in homogeneous materials. Where designed to be soldered at high temperatures, TI Pb-Free products are suitable for use in specified lead-free processes.
Pb-Free (RoHS Exempt): This component has a RoHS exemption for either 1) lead-based flip-chip solder bumps used between the die and package, or 2) lead-based die adhesive used between the die and leadframe. The component is otherwise considered Pb-Free (RoHS compatible) as defined above.
Green (RoHS & no Sb/Br): TI defines "Green" to mean Pb-Free (RoHS compatible), and free of Bromine (Br) and Antimony (Sb) based flame retardants (Br or Sb do not exceed 0.1% by weight in homogeneous material)

(3) MSL, Peak Temp. - The Moisture Sensitivity Level rating according to the JEDEC industry standard classifications, and peak solder temperature.

(4) There may be additional marking, which relates to the logo, the lot trace code information, or the environmental category on the device.

(5) Multiple Device Markings will be inside parentheses. Only one Device Marking contained in parentheses and separated by a "~" will appear on a device. If a line is indented then it is a continuation of the previous line and the two combined represent the entire Device Marking for that device.

(6) Lead/Ball Finish - Orderable Devices may have multiple material finish options. Finish options are separated by a vertical ruled line. Lead/Ball Finish values may wrap to two lines if the finish value exceeds the maximum column width.

Important Information and Disclaimer: The information provided on this page represents TI's knowledge and belief as of the date that it is provided. TI bases its knowledge and belief on information provided by third parties, and makes no representation or warranty as to the accuracy of such information. Efforts are underway to better integrate information from third parties. TI has taken and continues to take reasonable steps to provide representative and accurate information but may not have conducted destructive testing or chemical analysis on incoming materials and chemicals. TI and TI suppliers consider certain information to be proprietary, and thus CAS numbers and other limited information may not be available for release.

In no event shall TI's liability arising out of such information exceed the total purchase price of the TI part(s) at issue in this document sold by TI to Customer on an annual basis.

OTHER QUALIFIED VERSIONS OF DRV8802-Q1 :

- Catalog: DRV8802

NOTE: Qualified Version Definitions:

- Catalog - TI's standard catalog product

TAPE AND REEL INFORMATION

REEL DIMENSIONS

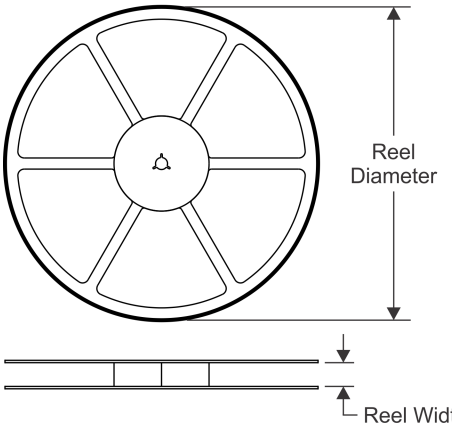

TAPE DIMENSIONS

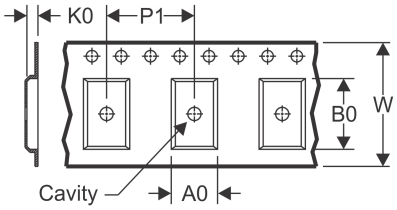

A0	Dimension designed to accommodate the component width
B0	Dimension designed to accommodate the component length
K0	Dimension designed to accommodate the component thickness
W	Overall width of the carrier tape
P1	Pitch between successive cavity centers

QUADRANT ASSIGNMENTS FOR PIN 1 ORIENTATION IN TAPE

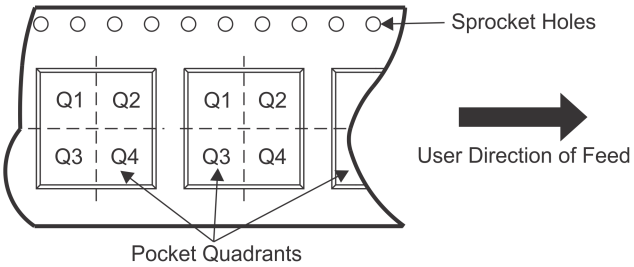

*All dimensions are nominal

Device	Package Type	Package Drawing	Pins	SPQ	Reel Diameter (mm)	Reel Width W1 (mm)	A0 (mm)	B0 (mm)	K0 (mm)	P1 (mm)	W (mm)	Pin1 Quadrant
DRV8802QPWPRQ1	HTSSOP	PWP	28	2000	330.0	16.4	6.9	10.2	1.8	12.0	16.0	Q1

TAPE AND REEL BOX DIMENSIONS

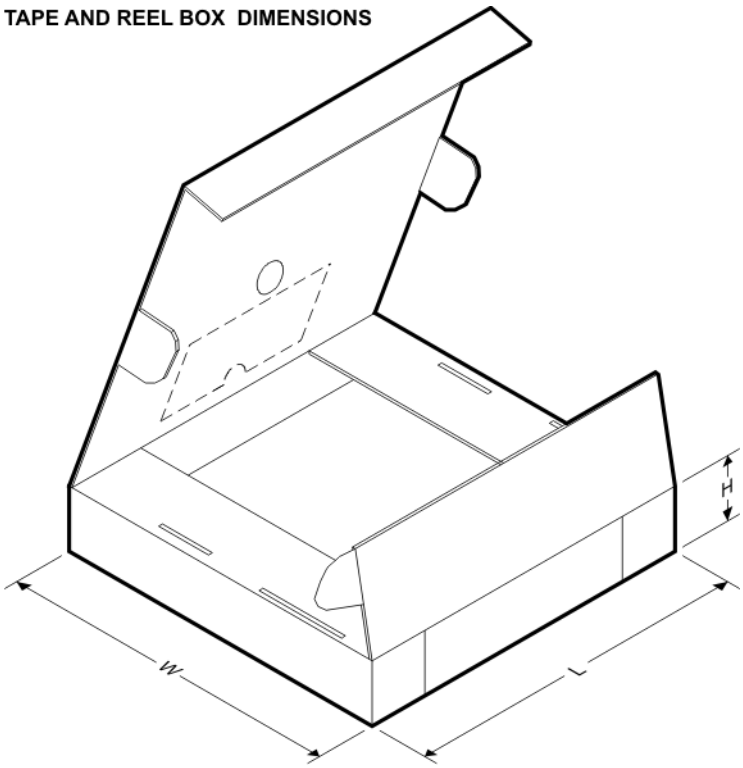

*All dimensions are nominal

Device	Package Type	Package Drawing	Pins	SPQ	Length (mm)	Width (mm)	Height (mm)
DRV8802QPWPRQ1	HTSSOP	PWP	28	2000	350.0	350.0	43.0

GENERIC PACKAGE VIEW

PWP 28

PowerPAD™ TSSOP - 1.2 mm max height

4.4 x 9.7, 0.65 mm pitch

SMALL OUTLINE PACKAGE

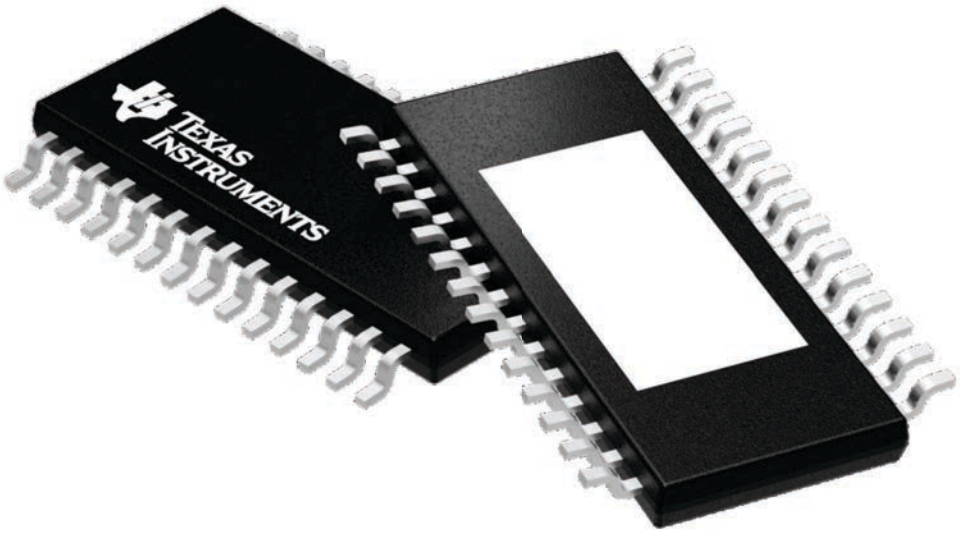

Images above are just a representation of the package family, actual package may vary.
Refer to the product data sheet for package details.

4224765/A

PWP (R-PDSO-G28) PowerPAD™ PLASTIC SMALL OUTLINE

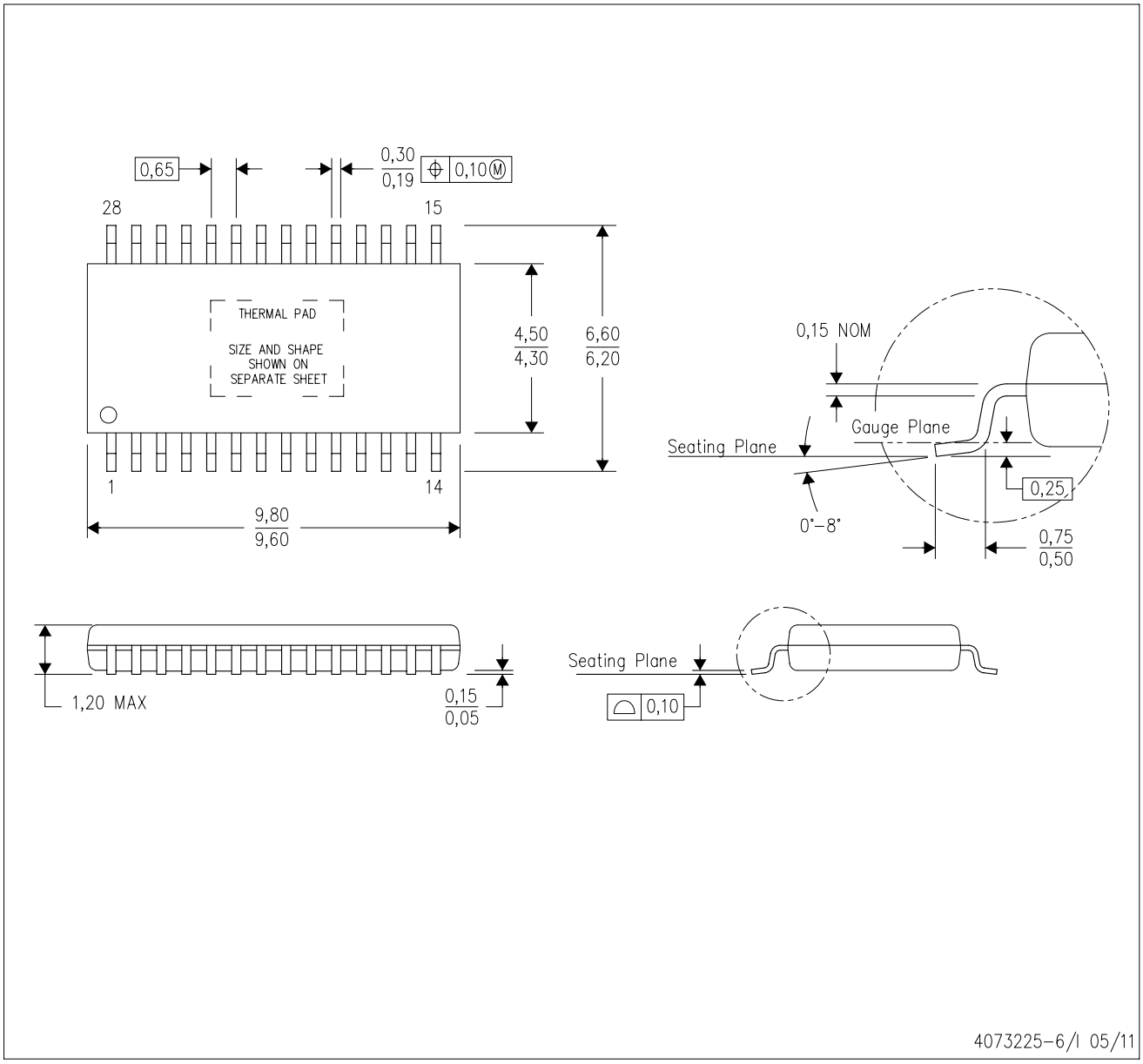

NOTES:
A. All linear dimensions are in millimeters.
B. This drawing is subject to change without notice.
C. Body dimensions do not include mold flash or protrusions. Mold flash and protrusion shall not exceed 0.15 per side.
D. This package is designed to be soldered to a thermal pad on the board. Refer to Technical Brief, PowerPad Thermally Enhanced Package, Texas Instruments Literature No. SLMA002 for information regarding recommended board layout. This document is available at www.ti.com <http://www.ti.com>.
E. See the additional figure in the Product Data Sheet for details regarding the exposed thermal pad features and dimensions.
E. Falls within JEDEC MO-153

PowerPAD is a trademark of Texas Instruments.

PWP (R-PDSO-G28) PowerPAD™ SMALL PLASTIC OUTLINE

THERMAL INFORMATION

This PowerPAD™ package incorporates an exposed thermal pad that is designed to be attached to a printed circuit board (PCB). The thermal pad must be soldered directly to the PCB. After soldering, the PCB can be used as a heatsink. In addition, through the use of thermal vias, the thermal pad can be attached directly to the appropriate copper plane shown in the electrical schematic for the device, or alternatively, can be attached to a special heatsink structure designed into the PCB. This design optimizes the heat transfer from the integrated circuit (IC).

For additional information on the PowerPAD package and how to take advantage of its heat dissipating abilities, refer to Technical Brief, PowerPAD Thermally Enhanced Package, Texas Instruments Literature No. SLMA002 and Application Brief, PowerPAD Made Easy, Texas Instruments Literature No. SLMA004. Both documents are available at www.ti.com.

The exposed thermal pad dimensions for this package are shown in the following illustration.

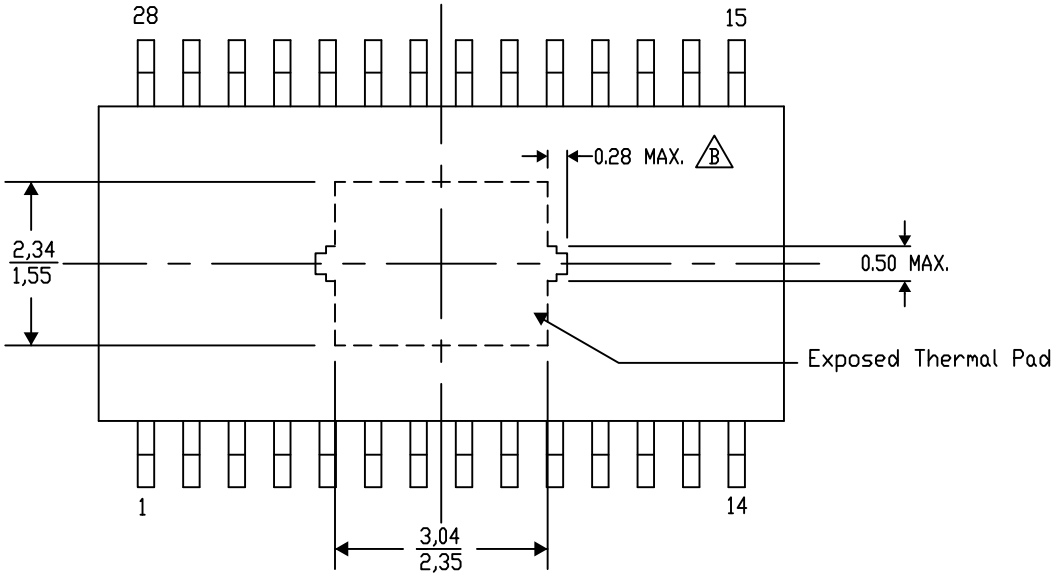

Top View

Exposed Thermal Pad Dimensions

4206332-39/AO 01/16

NOTE: A. All linear dimensions are in millimeters
B. Exposed tie strap features may not be present.

PowerPAD is a trademark of Texas Instruments

PWP (R–PDSO–G28) PowerPAD™ PLASTIC SMALL OUTLINE

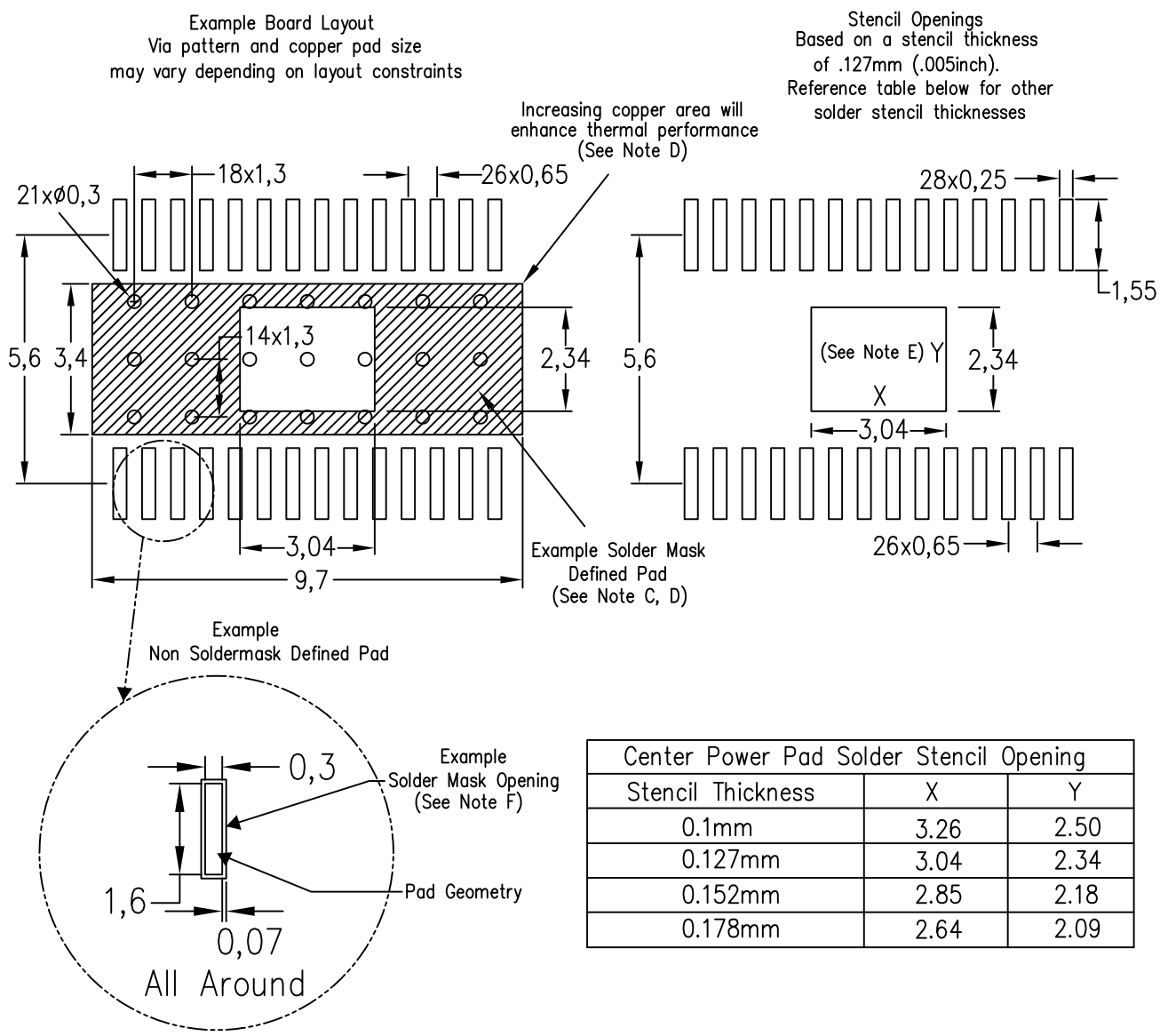

Center Power Pad Solder Stencil Opening		
Stencil Thickness	X	Y
0.1mm	3.26	2.50
0.127mm	3.04	2.34
0.152mm	2.85	2.18
0.178mm	2.64	2.09

4207609–23/W 09/15

NOTES:
A. All linear dimensions are in millimeters.
B. This drawing is subject to change without notice.
C. Customers should place a note on the circuit board fabrication drawing not to alter the center solder mask defined pad.
D. This package is designed to be soldered to a thermal pad on the board. Refer to Technical Brief, PowerPad Thermally Enhanced Package, Texas Instruments Literature No. SLMA002, SLMA004, and also the Product Data Sheets for specific thermal information, via requirements, and recommended board layout. These documents are available at www.ti.com <http://www.ti.com>. Publication IPC–7351 is recommended for alternate designs.
E. Laser cutting apertures with trapezoidal walls and also rounding corners will offer better paste release. Customers should contact their board assembly site for stencil design recommendations. Example stencil design based on a 50% volumetric metal load solder paste. Refer to IPC–7525 for other stencil recommendations.
F. Customers should contact their board fabrication site for solder mask tolerances between and around signal pads.

重要声明和免责声明

TI 均以“原样”提供技术性及可靠性数据（包括数据表）、设计资源（包括参考设计）、应用或其他设计建议、网络工具、安全信息和其他资源，不保证其中不含任何瑕疵，且不做任何明示或暗示的担保，包括但不限于对适销性、适合某特定用途或不侵犯任何第三方知识产权的暗示担保。

所述资源可供专业开发人员应用TI 产品进行设计使用。您将对以下行为独自承担全部责任：(1) 针对您的应用选择合适的TI 产品；(2) 设计、验证并测试您的应用；(3) 确保您的应用满足相应标准以及任何其他安全、安保或其他要求。所述资源如有变更，恕不另行通知。TI 对您使用所述资源的授权仅限于开发资源所涉及TI 产品的相关应用。除此之外不得复制或展示所述资源，也不提供其它TI或任何第三方的知识产权授权许可。如因使用所述资源而产生任何索赔、赔偿、成本、损失及债务等，TI对此概不负责，并且您须赔偿由此对TI 及其代表造成的损害。

TI 所提供产品均受TI 的销售条款 (http://www.ti.com.cn/zh-cn/legal/termsofsale.html) 以及ti.com.cn上或随附TI产品提供的其他可适用条款的约束。TI提供所述资源并不扩展或以其他方式更改TI 针对TI 产品所发布的可适用的担保范围或担保免责声明。

邮寄地址：上海市浦东新区世纪大道 1568 号中建大厦 32 楼，邮政编码：200122
Copyright © 2019 德州仪器半导体技术（上海）有限公司