No. IP80-OM00003-E

Operation Manual

PRODUCT NAME

ELECTRO-PNEUMATIC POSITIONER

MODEL / Series / Product Number

IP8000
IP8100

SMC Corporation

Contents

Safety Instructions	3-4
Introduction	5
1.Specifications	6
2.Operation principle	7-10
2-1 Type IP8000	7-8
2-2 Type IP8100	9-10
3.Attaching	11-13
3-1 Type IP8000	11-12
3-2 Type IP8100	12-13
4.Piping and Attaching of Internal Feedback Unit	14-16
5.Electrical Wiring	16
5-1 Positioner with terminal box	16
5-2 Positioner without terminal box	16
6.Explosion-Protected construction	17
7.Adjustment	18-20
7-1 Zero-point adjustment and span adjustment	19
7-2 Sensitivity adjustment	20
7-3 Manual switching	20
8.Maintenance and Check	21
9.Caution on Handling	22-23
10.Troubleshooting	24-26
11.Option	27-29
11-1 Pilot valve with output throttle	27
11-2 Fork lever type joint (Type IP8100)	27-28
11-3 External feet back lever (Type IP8000)	28
11-4 Resin Cable cramp unit (Type non-explosion protection)	28
11-4 Scale plate unit	29
13.How to order	30
14.Attached Drawing	31-37

Safety Instructions

These safety instructions are intended to prevent hazardous situations and/or equipment damage.
These instructions indicate the level of potential hazard with the labels of “Caution,” “Warning” or “Danger.”
They are all important notes for safety and must be followed in addition to International Standards (ISO/IEC)*1) , and other safety regulations.

*1) ISO 4414: Pneumatic fluid power -- General rules relating to systems.
ISO 4413: Hydraulic fluid power -- General rules relating to systems.
IEC 60204-1: Safety of machinery -- Electrical equipment of machines .(Part 1: General requirements)
ISO 10218-1992: Manipulating industrial robots -Safety.
etc.

Caution	**Caution** indicates a hazard with a low level of risk which, if not avoided, could result in minor or moderate injury.
Warning	**Warning** indicates a hazard with a medium level of risk which, if not avoided, could result in death or serious injury.
Danger	**Danger** indicates a hazard with a high level of risk which, if not avoided, will result in death or serious injury.

Warning

1. The compatibility of the product is the responsibility of the person who designs the equipment or decides its specifications.

Since the product specified here is used under various operating conditions, its compatibility with specific equipment must be decided by the person who designs the equipment or decides its specifications based on necessary analysis and test results.

The expected performance and safety assurance of the equipment will be the responsibility of the person who has determined its compatibility with the product.

This person should also continuously review all specifications of the product referring to its latest catalog information, with a view to giving due consideration to any possibility of equipment failure when configuring the equipment.

2. Only personnel with appropriate training should operate machinery and equipment.

The product specified here may become unsafe if handled incorrectly.

The assembly, operation and maintenance of machines or equipment including our products must be performed by an operator who is appropriately trained and experienced.

3. Do not service or attempt to remove product and machinery/equipment until safety is confirmed.

1.The inspection and maintenance of machinery/equipment should only be performed after measures to prevent falling or runaway of the driven objects have been confirmed.

2.When the product is to be removed, confirm that the safety measures as mentioned above are implemented and the power from any appropriate source is cut, and read and understand the specific product precautions of all relevant products carefully.

3. Before machinery/equipment is restarted, take measures to prevent unexpected operation and malfunction.

4. Contact SMC beforehand and take special consideration of safety measures if the product is to be used in any of the following conditions.

1. Conditions and environments outside of the given specifications, or use outdoors or in a place exposed to direct sunlight.
2. Installation on equipment in conjunction with atomic energy, railways, air navigation, space, shipping, vehicles, military, medical treatment, combustion and recreation, or equipment in contact with food and beverages, emergency stop circuits, clutch and brake circuits in press applications, safety equipment or other applications unsuitable for the standard specifications described in the product catalog.
3. An application which could have negative effects on people, property, or animals requiring special safety analysis.
4.Use in an interlock circuit, which requires the provision of double interlock for possible failure by using a mechanical protective function, and periodical checks to confirm proper operation.



Safety Instructions

Caution

1.The product is provided for use in manufacturing industries.

The product herein described is basically provided for peaceful use in manufacturing industries.
If considering using the product in other industries, consult SMC beforehand and exchange specifications or a contract if necessary.
If anything is unclear, contact your nearest sales branch.

Limited warranty and Disclaimer/Compliance Requirements

The product used is subject to the following “Limited warranty and Disclaimer” and “Compliance Requirements”.
Read and accept them before using the product.

Limited warranty and Disclaimer

1.The warranty period of the product is 1 year in service or 1.5 years after the product is delivered,whichever is first.∗2)
Also, the product may have specified durability, running distance or replacement parts. Please consult your nearest sales branch.

2. For any failure or damage reported within the warranty period which is clearly our responsibility, a replacement product or necessary parts will be provided.
This limited warranty applies only to our product independently, and not to any other damage incurred due to the failure of the product.

3. Prior to using SMC products, please read and understand the warranty terms and disclaimers noted in the specified catalog for the particular products.

∗2) Vacuum pads are excluded from this 1 year warranty.
A vacuum pad is a consumable part, so it is warranted for a year after it is delivered.
Also, even within the warranty period, the wear of a product due to the use of the vacuum pad or failure due to the deterioration of rubber material are not covered by the limited warranty.

Compliance Requirements

1. **The use of SMC products with production equipment for the manufacture of weapons of mass destruction(WMD) or any other weapon is strictly prohibited.**

2. **The exports of SMC products or technology from one country to another are govemed by the relevant security laws and regulation of the countries involved in the transaction. Prior to the shipment of a SMC product to another country, assure that all local rules goveming that export are known and followed.**

Introduction

E

IP8*00 Series Electro-pneumatic positioner controls the motion of actuator by the operation of pilot valve. This pilot valve is activated by signal current from adjustment unit mounted to air actuator.

And this product get certification regarding explosion-protection construction from Technology institution of industrial safety (TIIS) Japan. If the positioner is used as the product with explosion -protection, use in accordance with “Recommended Practice for Explosion-Protected Electrical Installations in General Industries” by Technology institution of industrial safety Japan

1.Specifications

Table 1 Specifications

Item \ Type	IP8000		IP8100	
	Lever type lever		Rotary type cam	
	Single action	Double action	Single action	Double action
Input current	4～20mADC (Standard)*1			
Input resistance	235±15Ω (4～20mADC)			
Supply air pressure	0.14～0.7MPa			
Standard stroke	10 ～ 85mm (External lever allow-able runout angle 10° to 30°)		60° to 100°*2	
Sensitivity	Within 0.1%F･S	Within 0.5%F･S		
Linearity	Within ±1%F･S	Within ±2%F･S		
Hysteresis	Within 0.75%F･S	Within 1%F･S		
Repeatability	Within ±0.5%F.S			
Thermal coefficient	Within 0.1%F.S/°C			
Output flow rate *3	80L/min (ANR) or more (SUP=0.14MPa)			
	200L/min(ANR) or more (SUP=0.4MPa)			
Air consumption *3	Within 5L/min (ANR) (SUP=0.14MPa)			
	Within 11L/min (ANR) (SUP=0.4MPa)			
Ambient and using fluid Temperature	-20°C to 80°C (When use in non-hazardous area)			
	-20°C to 60°C (When use at flameproof type Exd Ⅱ BT5)			
Explosion-protected Construction	Flameproof type of explosion-protection (Exd Ⅱ BT5), Technology institution of industrial safety (TIIS) Japan certified.			
Air connection port / Pressure gauge connection port	1/4(Rc,NTP,G) female screw ／ Rc1/8 female screw			
Electric wiring connection Port	1/2(G,NPT), M20×1.5 female screw			
Wiring	Metal conduit type Flameproof packing type G1/2 connector (option for non-explosion protection type)			
Material	Die-cast aluminum for the body			
Mass	Approx. 2.6kg with terminal box (Approx.2.4kg without terminal box)			
Classification of degree of Protection	JISF8007 IP65 (conform to IEC Pub.529)			

＊1：1/2 split range is available as standard. When the product is used in 1/2 split range, be aware that the linearity range is 1% F.S. wider (+/-1% F.S.) and the hysteresis should be increased by 1% F.S. to the values shown in the Specification table above.

＊2：The stroke is adjustable in 0 to 60°and 0 to 100°.

＊3：Standard air (JIS B0120):temp.20°C, absolute press.101.3KPa, ratio humidity 65%.

2.Operation Principle

2-1 Type IP8000

When the input current increases, armature (13) receives counter-clockwise rotating torque with leaf-spring (11) of torque motor (12) functioning as the support, counter-weight (4) is pushed towards left, the space between nozzle (6) and flapper (5) opens and the nozzle back pressure decreases. As the result, exhaust valve (7) of pilot valve (1) moves to right, the output pressure of OUT1 increases and diaphragm valve (15) moves downward. The movement of diaphragm valve (15) acts on feedback spring (10) through feedback lever (8), transmission lever (14) and span adjusting lever (9) and the actuator is balanced at the position where it is balanced with the force generated by the input current. Gain suppression spring (2) is used to immediately feedback the movement of exhaust valve (7) to counter-weight (4) and it increases the loop stability. For zero-point adjustment, change the tension of zero-adjust spring (3).

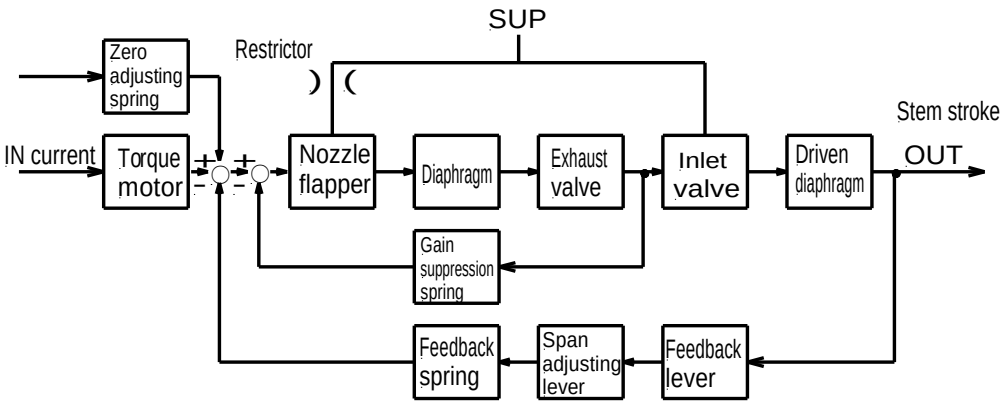

Fig. 1 Block diagram of Type IP8000

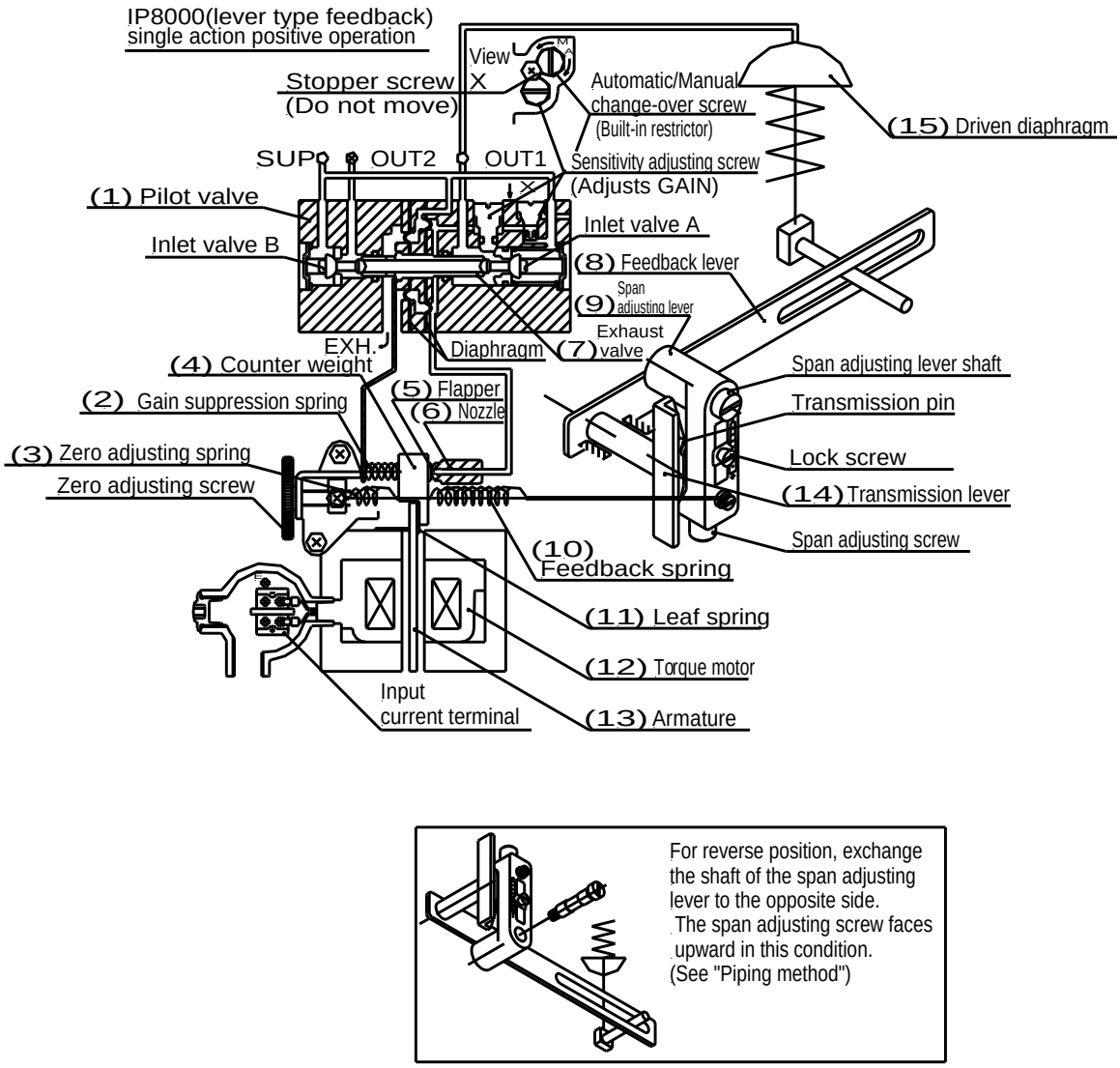

Fig.2. Drawing for IP8000 operation principle

2-2 Type IP8100

When the input current increases, armature (14) receives counter-clockwise rotation torque with leaf-spring (12) of torque motor (13) functioning as the support, counter-weight (4) is pushed towards left, the space between nozzle (6) and flapper (5) opens and the nozzle back pressure decreases. As the result, exhaust valve (7) of pilot valve (1) moves to right, the output pressure of OUT1 increases and the output pressure of OUT2 decreases, starting the rotation of rocking actuator (16). The movement of rocking actuator (16) acts on feedback spring (10) through feedback shaft, cam (8), span adjusting lever (9) and transmission lever (15) and the actuator is balanced at the position where it balances with the force generated by the input current. Fig.6 shows the case of cam DA structure normal actuation (the main shaft of rocking actuator (16) turns clockwise at the time the input current increases).

Gain suppression spring (2) is used to immediately feedback the movement of exhaust valve to counter-weight (4) and it increases the loop stability. For zero-point adjustment, change the tension of zero-point adjust spring (3).

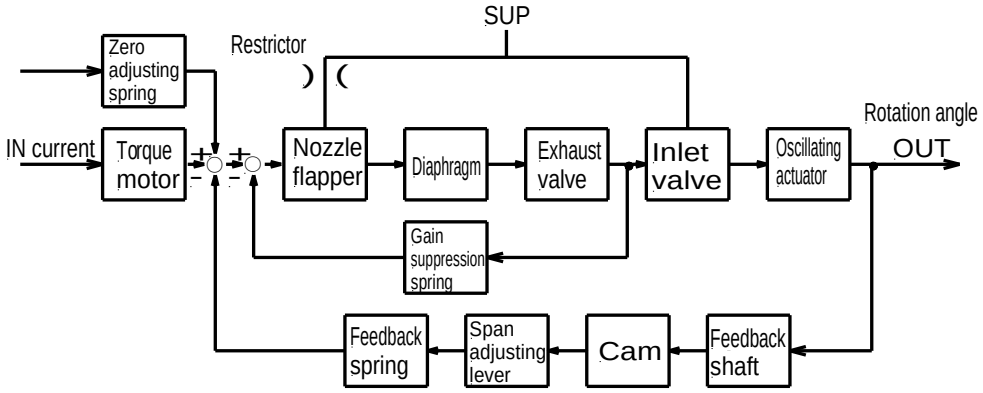

Fig.3 Block diagram of Type IP8100

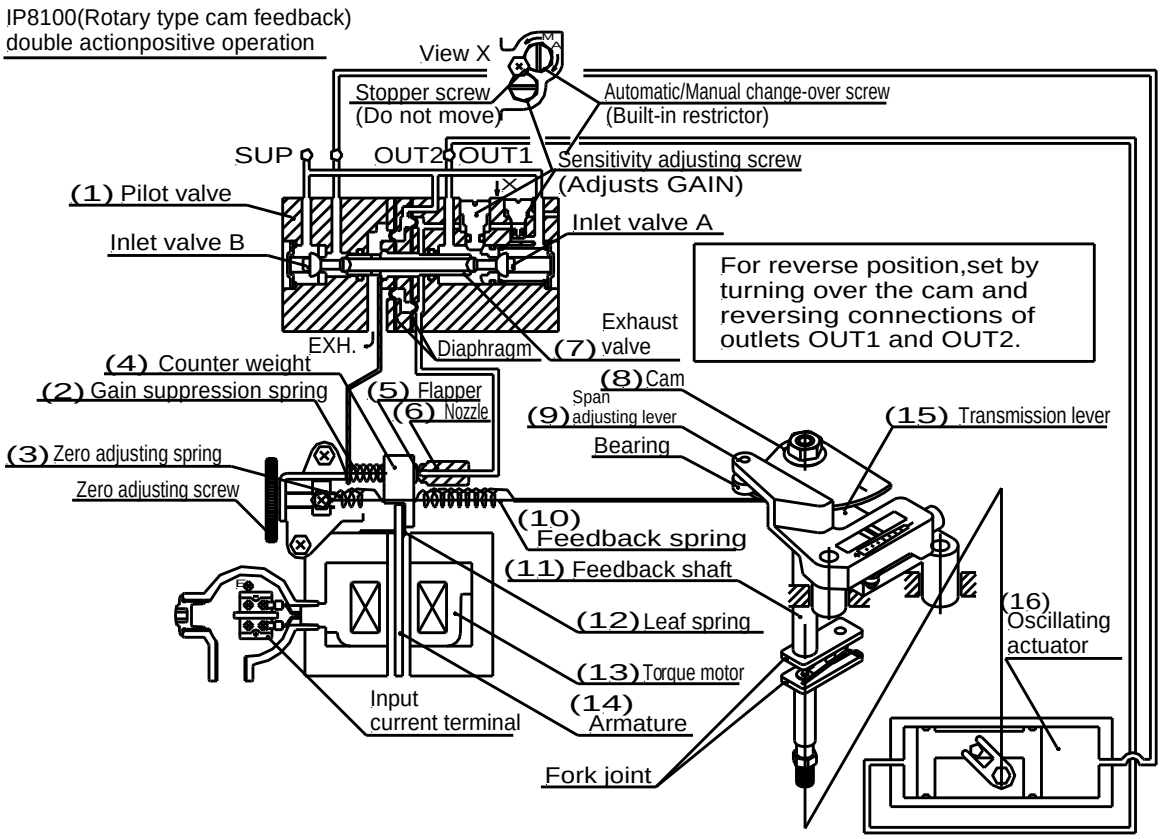

Fig.4 Drawing for IP8100 operation principle

3.Attaching

⚠ Warning

(1) Make a space needed for maintenance on the setting area.

(2) Take care that fingers are not pinched during mounting and positioning the cam. Cut supply pressure and release compressed air in positioner and actuator in advance.

⚠ Caution

(1) Confirm actuator and positioner are connected properly and tightly.

3-1. Type IP8000

3-1-1 Example of attaching to actuator

The type IP8000 positioner is compatible with Type IP600 and IP6000 in the attaching pitch. If you are using IP600 and IP6000 already, the bracket for those positioner can be used to attach IP8000 to the actuator.

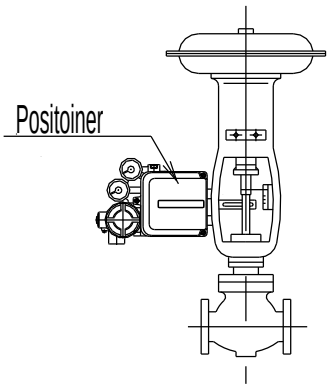

Fig.5 Directly attaching to diaphragm valve

Directly attach using the screw hole at a side of the positioner and the screw hole at the yoke side of diaphragm.

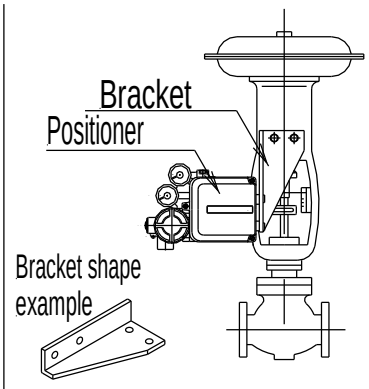

Fig.6 L-shape bracket

Attach using the screw hole at a side of the positioner and the screw hole at the front mount of diaphragm valve.

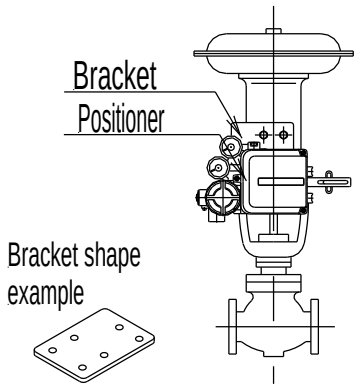

Fig.7 Front bracket

Attach using the screw hole at the positioner back and the screw hole at the front mount of diaphragm valve.

3-1-2 Connection with external feedback lever

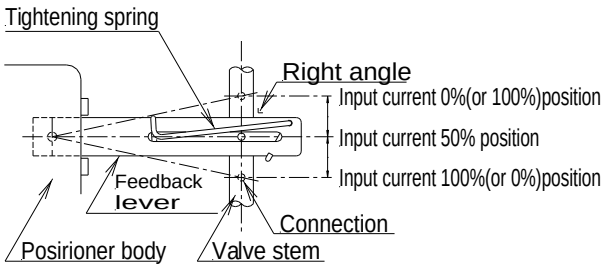

Fig.8 Attaching the feedback lever

(1)Attach to the position that the valve stem and lever form the right angle when the input signal is 50%(distribute evenly with 50% input signal set as the reference).

(2)Attach to the position that the runout angle is within the range of 10°to 30°.

(3)To move the valve stem downward at the time of input current increase(normal actuation), attach to the position at which the tightening spring comes to the upper side of the connection, as shown in Fig.9.

To move the valve stem upward(reverse actuation), turn-over the feedback lever and attach to the position at which the tightening spring comes to the lower side of connection.

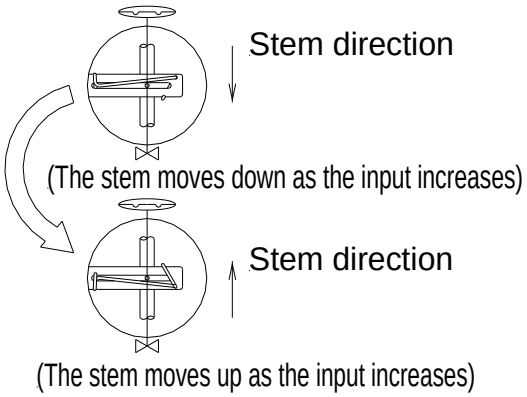

Fig.9 Use position of feedback lever

3-2 Type IP8100

3-2-1 Example of attaching to actuator

The type PI8100 positioner is compatible with type IP610 and IP6100 in the attaching pitch. If you are using IP610 or IP6100 already, the bracket can be used to attach IP8100 to the actuator. If you change from IP6100 to IP8100 and select accessory H (with external scale plate), fork lever type fitting needs to be adjusted at lower position.

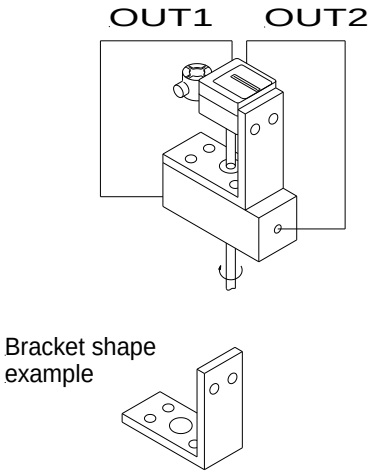

Fig.10 Mounting by positioner side screw

Attach using the screw hole at a side of the positioner and the screw hole at the actuator top.

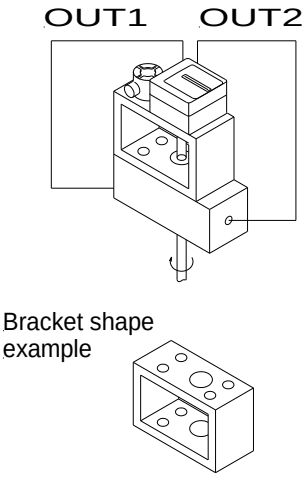

Fig.11 Mounting by positioner back screw

Attach using the screw hole at the positioner back and the screw hole at the actuator top.

3-2-2 Connection with feedback shaft

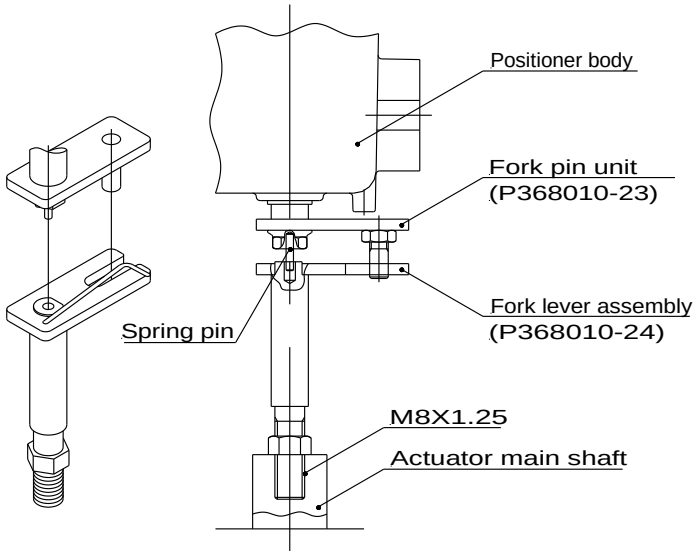

(1) Attach to the position at which the positioner feedback shaft and the rotary actuator main shaft are alsmost concentric (range in which the spring pin of feedback shaft edge enters the hole of fork lever assembly shaft edge).

(2) If the separation joint type for IP610 is made in a special specification, it can be used for this connection.

Fig.12 Example of attaching using fork lever type joint

3-2-3 Cam attaching procedure

(1) Use the DA face of cam to turn the actuator main shaft clockwise (viewed from the positioner front cover side) at the time of input signal increase. Use the RA face to turn it counter-clockwise (reverse actuation). Correctly attach the cam to the flange part of feedback shaft.

(2) Attach the cam in the procedure of loosening the hexagonal nut with flange first, setting the using actuator to the starting position and then setting the cam reference line and the bearing contact point of span adjusting arm unit to the matching position.

(3) Do not apply the supply pressure when attaching the cam as otherwise it is very dangerous.

(4) When the positioner is shipped from our plant, the cam is tentatively tightened to the shaft. Be sure to firmly lock the cam to the lock nut (Tightening torque 3.6～4.1 Nm)

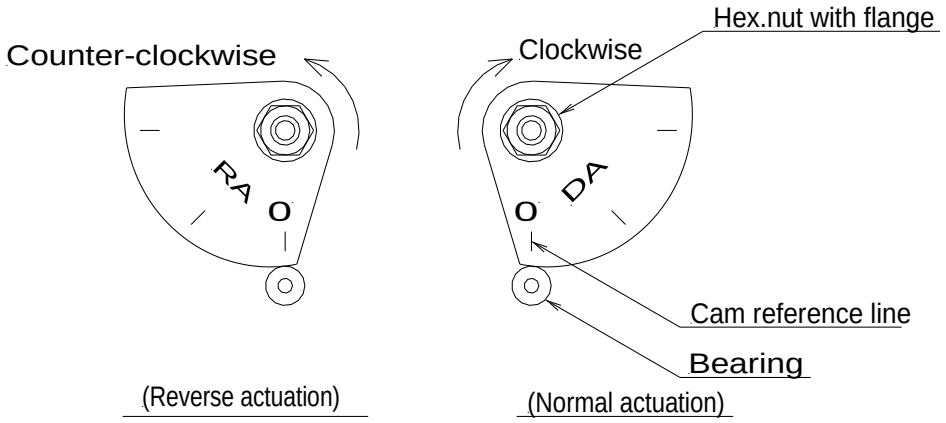

Fig.13 Example of cam attaching

4.Piping and Attaching of Internal Feedback Unit

Table 2 Piping for IP8000 (Lever type)

	Single action		Double action	
Normal action *Note	Actuation:The stem moves in the arrow direction when the input current increases.	OUT2:Plug	Actuation:The stem moves in the arrow direction when the input current increases.(Normal actuation using the reverse actuation drive unit).	OUT1:Plug
Reverse action *Note	Actuation:The stem moves in the arrow direction when the input current increases.(Reverse actuation using the normal actuation drive unit.	OUT1:Plug	Actuation:The stem moves in the arrow direction when the input current increases.	OUT2:Plug

Note:Refer to Item(3) of 3-1-2 Connection with external feedback lever.

Table 3 Piping for IP8100(Rotary type)

	Single action		Double action
Normal action *Note	Actuation:The actuator main shaft turns clockwise when the input signal increases. 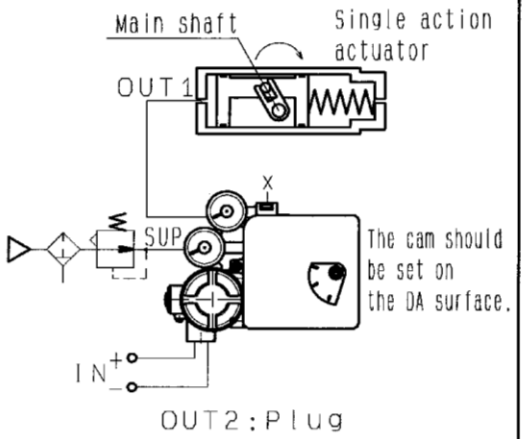	Actuation:The actuator main shaft turns clockwise when the input signal increases. (Normal action using the reverse actuation drive unit). 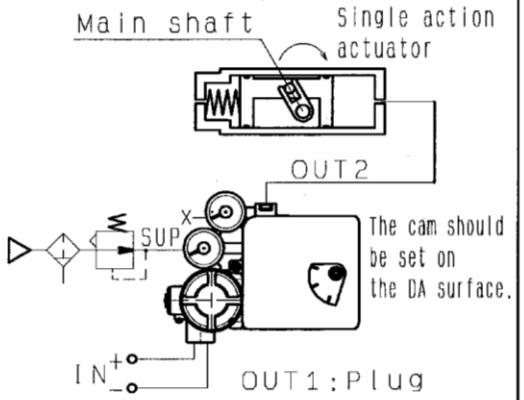	Actuation:The actuator main shaft turns clockwise when the input signal increases. 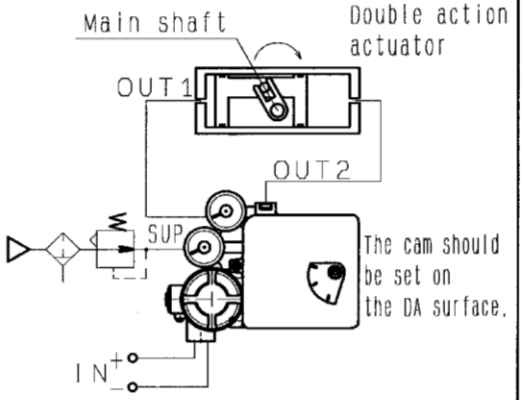
Reverse action *Note	Actuation:The actuator main shaft turns counter-clockwise when the input signal increases.(Reverse actuation using the normal actuation drive unit). 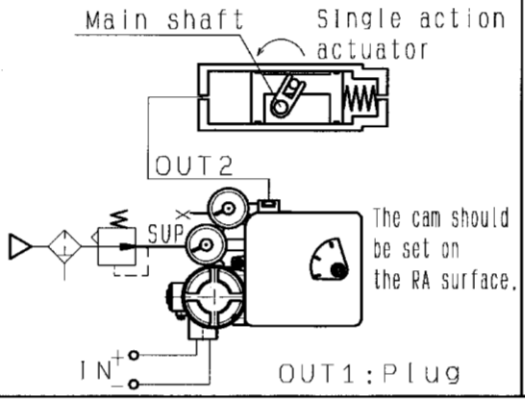	Actuation:The actuator main shaft turns counter-clockwise when the input signal increases. 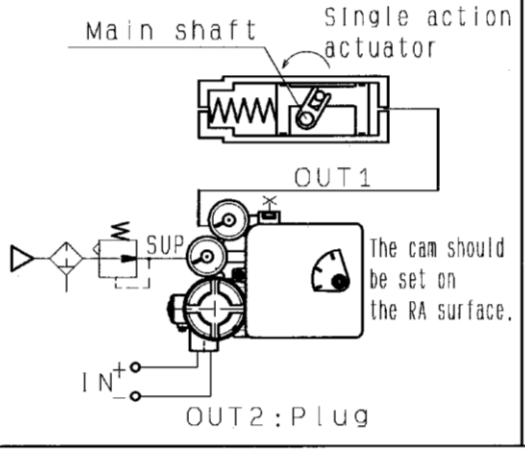	Actuation:The actuator main shaft turns counter-clockwise when the input signal increases. 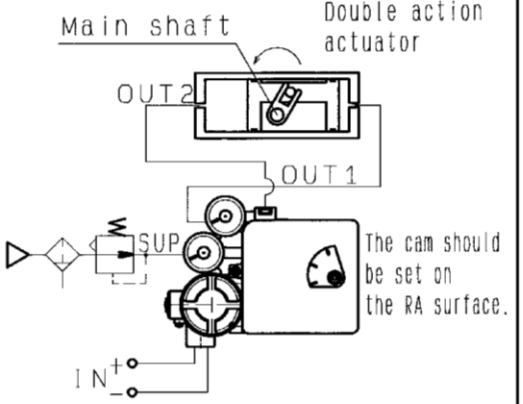

Note:Refer to 3-2-3 Cam attaching procedure

⚠ Caution

Prior to piping, flush enough and remove chip, cutting oil and dust in tube so that obstruction wouldn't intrude into positioner.

Confirm specification and working direction of actuator, and mount pipes and internal feedback unit in accordance with table 2 and 3.

5.Electrical Wiring

5-1 Positioner with terminal box

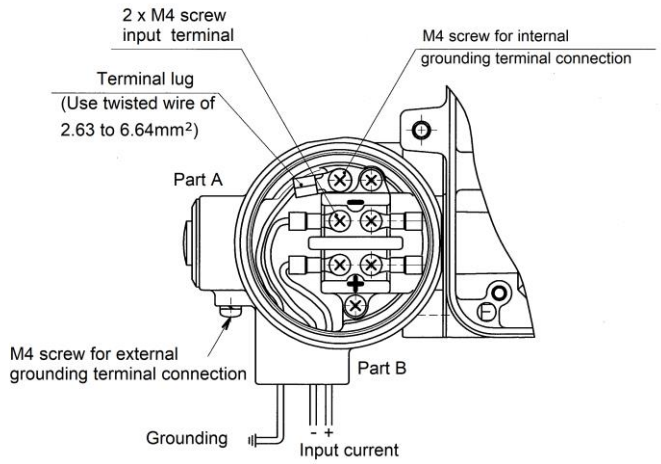

Fig 14.Positioner with terminal box

(1) Connect the (+) and (-) output terminals from the regulator with the (+) and (-) input terminals, respectively, of the positioner terminal box. The port diameter at the conduction wire drawing port is the size of G1/2 parallel screw for piping and the depth is for a 16.5mm female screw.

(2) Two drawing ports, marked as Part A and Part B in Fig.14, are provided. Use either one as fitted. (Part B is used in the figure).

5-2 Positioner without terminal box

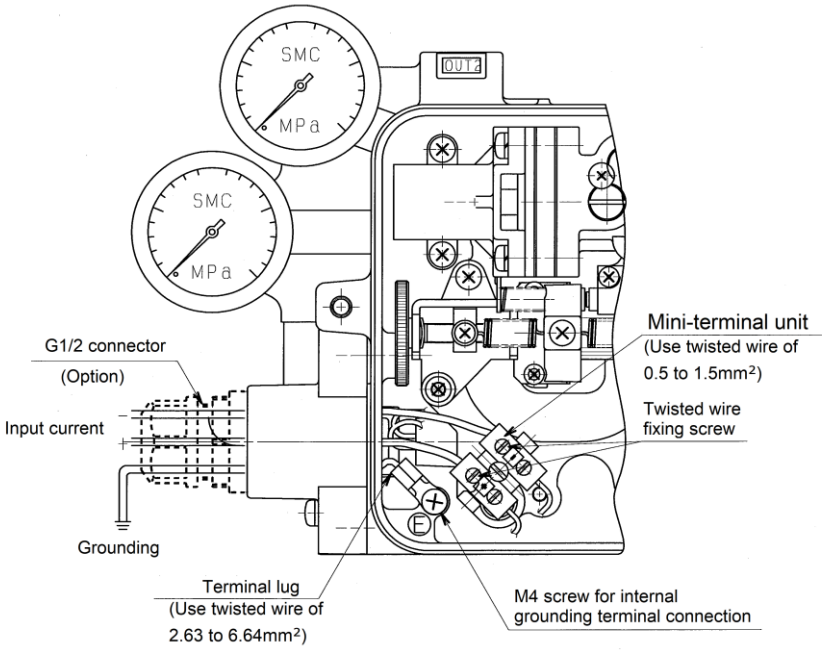

ıect the (+) and (-) output ıals from the regulator with the d (-) input terminals, respectively, positioner terminal box. The port ːter at the conduction wire ŋg port is the size of G1/2 parallel for piping and the depth is for a n female screw.

Fig. 15 Positioner without terminal box

6.Explosion-Protected construction

⚠ Warning

If the positioner is used as the product with Flameproof type of Explosion-Protection, leading external conductors into a flameproof terminal box in accordance with “Recommended Practice for Explosion-Protected Electrical Installations in General Industries” by Technology institution of industrial safety Japan”.

(1) This product conforms to Exd Ⅱ BT5 based on International Standard (IEC Standard 79).

Method of leading external conductors and cables into a terminal box shown as below.

In the case where this is used as Exd Ⅱ BT5

A) Flameproof packing type leading method.
Cable Ground (refer to Table4 Option) is used as shown in Fig.16.

B) Metal conduit leading method.
Sealing fittings should be attached to leading port of external conductor.

(Please refer to “Recommended Practice for Explosion-Protected Electrical Installations in General Industries” by Technology institution of industrial safety Japan” for details.)

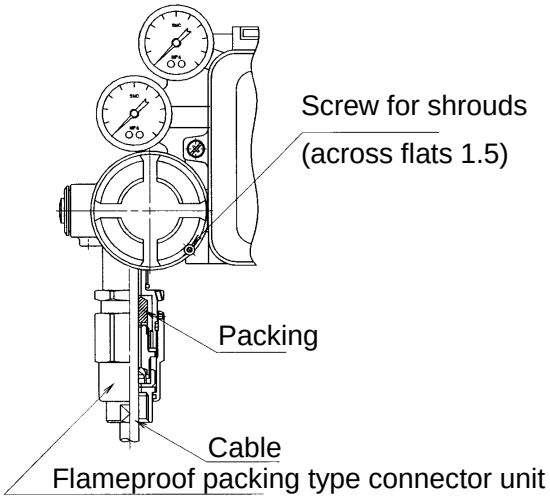

Part name	Part number	Applicable Cable O.D.
Flameproof packing type connector unit	P368010-32	φ7.0～10.0
	P368010-33	φ10.1～φ12.0

Table4 Flameproof packing type cable ground (Option)

Fig.16 Flameproof packing type leading method

7.Adjustment

⚠ Caution
(1) For this positioner, span and zero point adjustment of each actuator is necessary. Adjustment shall be done based on each actuator size. (2) Keep in mind that span and zero point adjustment interfere in each other. (3) Characteristics changes due to change of mounting position, ambient temperature and supply pressure. (4) If it takes long time until operation after initial adjustment, check and adjust this product. (5) Sensitive adjustment is effective for only double acting actuator. (6) Manual change function is effective for single acting actuator which is controlled by using OUT1.

Check the following prior to start the adjustment.

(1) Check that the pipeline is correctly connected with the pressure supply port and OUT1 and OUT2 ports.
(2) Check that the wires are correctly connected with the (＋), (－) and grounding terminals.
(3) Check that the actuator and positioner are sturdily connected.
(4) Check for locking of the auto/manual changeover screw of pilot valve (fully tightened in the clockwise direction).
(5) Check that the span adjusting lever of internal feedback lever (Type IP8000) is attached to the correct (normal or reverse) position. (Refer to Tables 2.)
(6) Check for correct use of the cam surface (normal or reverse) in Type IP8100 and that the flange nut is firmly locked.
(Refer to Table 3.)

7-1 Zero-point adjustment and span adjustment

Table 5 Adjustment procedure

	TYPE IP8000	TYPE IP8100
Zero-point adjustment	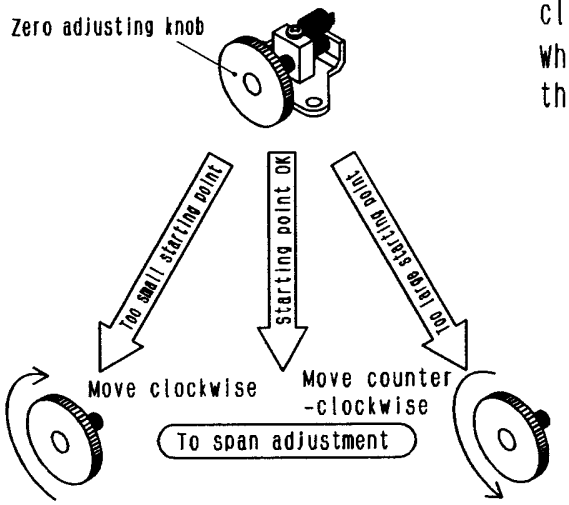	When the zero adjusting knob is turned clockwise, the starting point increases. When it is turned counter-clockwise, the starting point decreases. 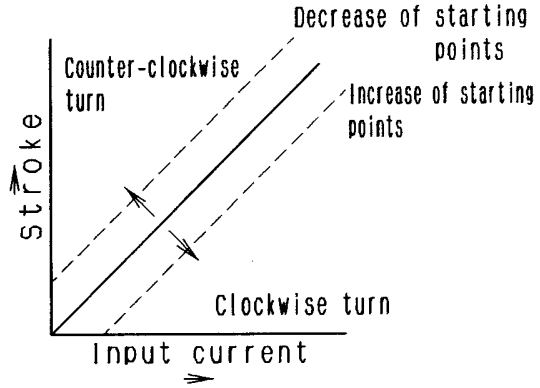
Span adjustment	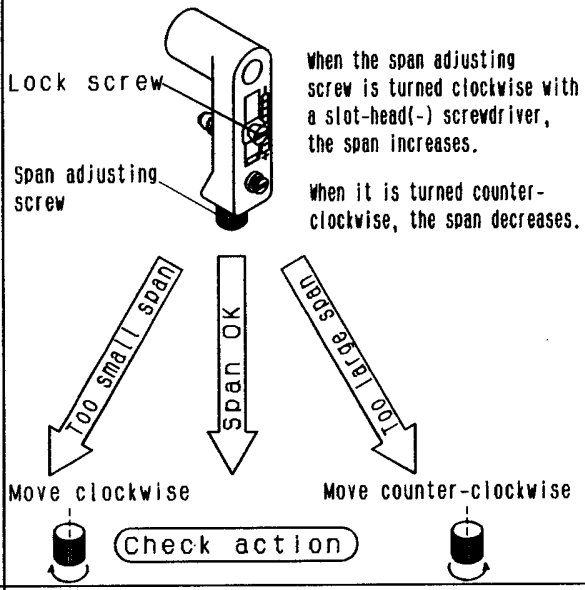	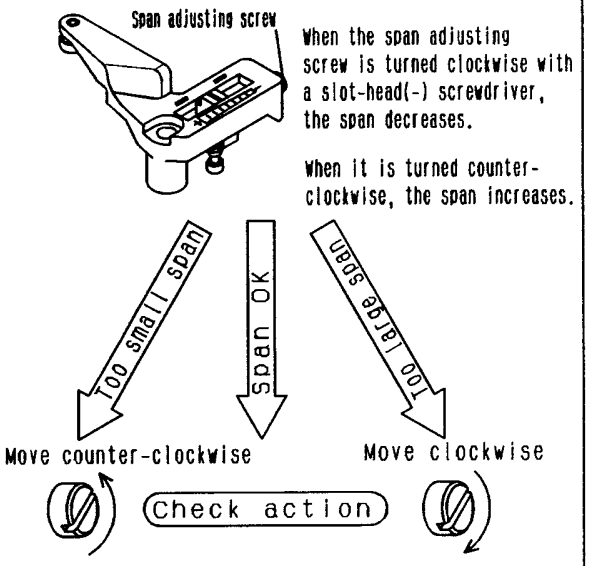
Adjusting procedure	(1) Set the input current to 0% (4mADC in the standard specification) and turn the zero adjusting knob by hand to set it to the actuator starting point. (2) Then, set the input current to 100% (20mADC in the standard specification) and check the actuator stroke. At this point, depending on whether the span is too large or too small, loosen the lock screw and then adjust the span as shown in the illustration above. (3) Set the input current to 0% and conduct the zero-point adjustment, as done in Step (1) again. (4) Repeat the above operations until the predetermined stroke of the actuator is obtained to the input current.	(1) Set the input current to 0% (4mADC in the standard specification) and turn the zero adjusting knob by hand to set it to the actuator starting point. (2) Then, set the input current to 100% (20mADC in the standard specification) and check the actuator stroke. At this point, depending on whether the span is too large or too small, adjust the span as shown in the illustration above. (3) Set the input current to 0% and conduct the zero-point adjustment, as done in Step (1) again. (4) Repeat the above operations until the predetermined stroke of the actuator is obtained to the input current.

7-2 Sensitivity adjustment

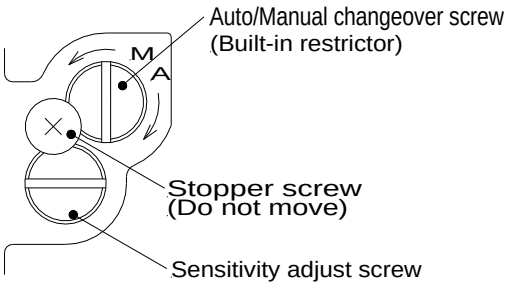

Fig.17 Pilot valve

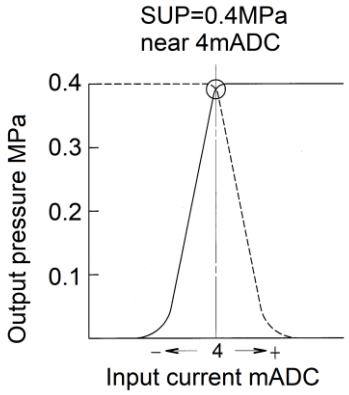

Fig.18 Input/output-pressure characteristic

Fig.18 shows the input current –output pressure characteristics of OUT1 and OUT2 of the pilot valve. The sensitivity adjust screw (Fig. 17) is adjusted at the time of shipment to optimize the output pressure (Fig. 18) and this needs no adjustment ordinarily.

⚠ Caution

The sensitivity adjustment of pilot valve is effective to the double action actuator only. If the sensitivity is poor because of the actuator type of load condition, turn the sensitivity adjust screw clockwise. If hunching occurs, turn the sensitivity adjust screw counter-clockwise.
(The amount of turning depends on actuators. Turn it by 1/16 to one turn. Do not loosen the stopper screw at this time since it is set to avoid the screw coming off.)

* If hunching occurs with an actuator of small capacity, refer to the description in 11-1 (for both single action and double action.)

7-3 Manual switching

(1) Supply pressure and the OUT1 output are connected by rotating the Auto/Manual changeover screw towards M (Fig. 17). Manual stroke adjustment of the diaphragm valve and single acting actuator can be adjusted by using the supply pressure setting reducing valve Mode switching is available by approx. 1/8 turn. Keep the rotation within 1/4 to 1/8 turn.
(2) To operate based on the input current, tighten the Auto/Manual changeover screw towards A. (See Fig. 17).

⚠ Caution

On this manual switching, SUP and OUT1 are conducted through the pilot valve and when the pilot valve becomes out of order, the manual switching is not functioning. Note that the stopper small screw set to the top is for prevention from coming off. Do not loosen it.
The sensitivity adjust screw is adjusted before shipping. Do not rotate it.

8.Maintenance and Check

⚠Warning

(1) **After installation, repair or disassembly, connect compressed air and conduct tests to confirm appropriate function and leakage.**

Do not use the positioner when noise from the bleeder sounds louder compared with the initial state, or when it does not operate normally. If these occur, check immediately if assembled and mounted correctly.

Never modify electrical construction to maintain explosion-proof construction.

⚠Caution

(1) Check if supply air is clean or not. Inspect compressed air cleaning system periodically and keep condition to be able to always get clean air so that dust, oil and humidity which cause malfunction and failure wouldn't include into the equipment.

(2) If handled improperly, compressed air can be dangerous. Maintenance and replacement of unit parts should be performed only by trained and experienced personnel for instrumentation equipment as well as following the product specifications.

(3) Perform an annual inspection of the positioner. D

Zero point and span may have deviated. During regular maintenance, check for the following and replace any components as necessary.

When an excessively worn diaphragm, O-ring or other packing is found, or any unit has been damaged, replace with new ones. Treatment at an early stage is especially important if the positioner is used in a place of severe environments.

(4) Before removing the positioner for maintenance or replacing unit parts after installation, make sure the supply pressure is shut off and all residual air pressure is released from piping.

(5) When the fixed orifice is clogged with carbon particles or others, remove the pilot valve Auto/Manual changeover screw (built-in restrictor) and clean it by inserting a ø0.2 wire into the aperture. If it must be replaced with new one, stop the supply pressure and remove the stopper screw of the pilot valve.

(6) It is recommended to replace the pilot valve unit every 3 years. D

When the pilot valve unit is disassembled, apply a small amount of specified grease to the sliding surface.

(7) Check air leak from piping which compressed air flows. Air leak from air piping could deteriorate characteristics.

Air is normally discharged from a bleed port, but this is a necessary air consumption based on the construction of the positioner, and is not an abnormality if the air consumption is within the specified range.

1. 9. Caution on Handling

■Operation

⚠Warning

(1) Do not use this positioner out of the range of its specifications as this can cause failure. (Refer to 1. Specifications.)

(2) If the system is supposed to be in danger because of failure of the positioner, prepare the system with a safety circuit to avoid danger.

(3) If the positioner is used as the product with Flameproof type of Explosion-Protection, leading external conductors into a flameproof terminal box in accordance with “Recommended Practice for Explosion-Protected Electrical Installations in General Industries”

(4) Do not remove the terminal cover at a dangerous position during power conduction.

(5) Be sure that the terminal cover and body cover are put on during the operation.

⚠Caution

(1) Do not touch the actuator and operating part of the valve when they are pressurized. as this can be dangerous.

(2) Take care not to get your fingers caught during mounting or positioning the cam. Stop supplying pressure beforehand to release compressed air in the positioner and actuator.

(3) Be sure to operate the positioner with the body cover unit mounted.
IP65 may not be satisfied depending on the body cover mounting condition. Apply correct tightening torque (2.8 to 3.0 Nm) to satisfy IP65.

(4) Flush the inside of the piping while connecting it so that foreign matter such as cutting debris does not enter into the piping.

(5) The opening degree of the actuator may be unstable if a booster relay is used.

(6) Make sure to perform grounding as a countermeasure against input current noise, to avoid malfunction due to noise and static electricity.

(7) When a pressure gauge is used with the positioner, use it as a reference only.

(8) When frozen air is supplied to the internal mechanical parts of the positioner, the behaviour of the pressure gauge indicator will become unstable.

■For operators

⚠Caution

(1) Read and understand the operation manual carefully before assembling, operating or providing maintenance to the product.

■Handling

⚠Warning

(1) Avoid giving impact to the body and torque motor of positioner, and giving excessive force to armature because it leads to failure. Handle with care during transport and operation.

(2) In an operating site with vibration, wrap the lead wires using a cable tie to protect them from damage. D

(3) If the positioner is left unused at the operation site for an extended period, ensure the body cover unit is fitted, and mount a plug on the wiring and piping ports. If the atmosphere is of high temperature or high humidity, take measures to avoid condensation inside. The condensation control measures must be taken thoroughly for exportshipment. D

(4) Avoid to set positioner near magnetic field because characteristics are effected.

■Air supply

⚠Warning

(1) Use dehumidified and dust-removed clean air as the supplying air source.

(2) Positioner has fine paths in it. Therefore, please use clean air which is dehydrated and filtered, and also avoid employing Lubricator which causes malfunction. In addition, it is recommended to use a mist separator as an air-cleaning equipment.

(3) Avoid using compressed air compressed air containing chemicals, synthetic fluid including organic solvent, salinity, and corrosive gas as it may cause malfunction.

(4) If atmosphere is below freezing point, take measure to avoid condensation.

■Environment

⚠Warning

(1) Do not use in an environment where the product is exposed to corrosive gas, chemicals, salt water, water or steam.

(2) Do not operate the product in a location where it is subject to strong vibration and/or shock.

(3) If the positioner is used under temperature outside of the specification, the sealing materials deteriorate quicker and also the positioner may not operate normally.

10.Troubleshooting

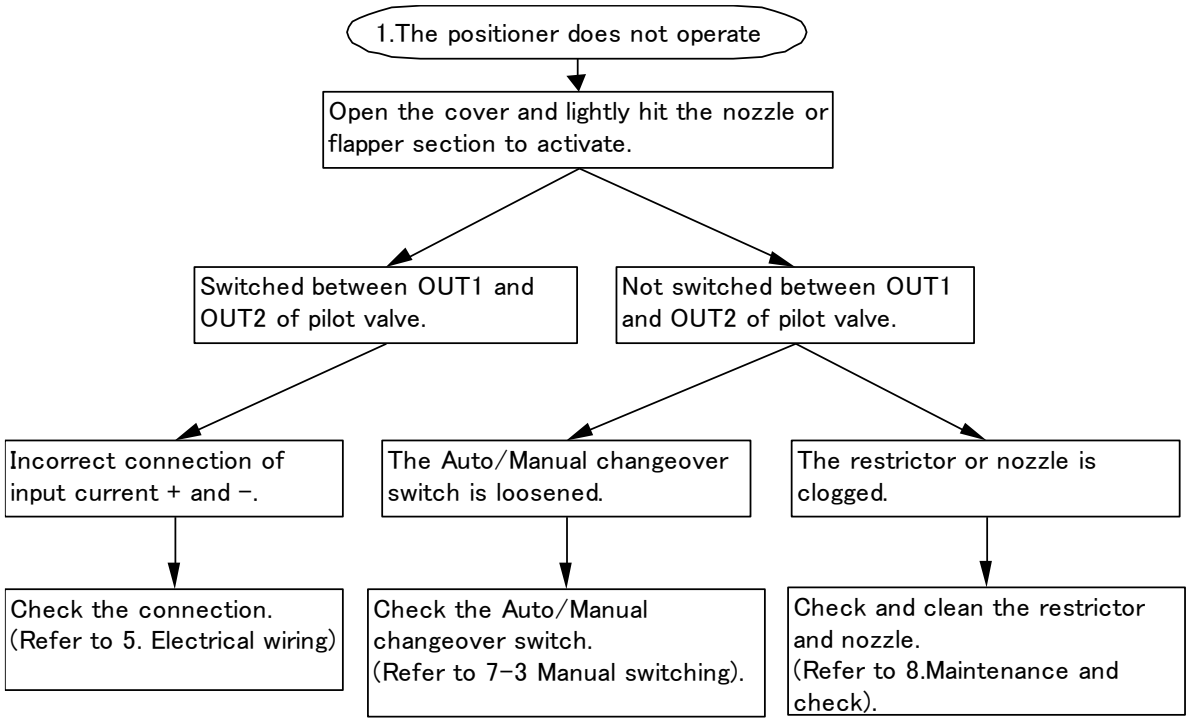

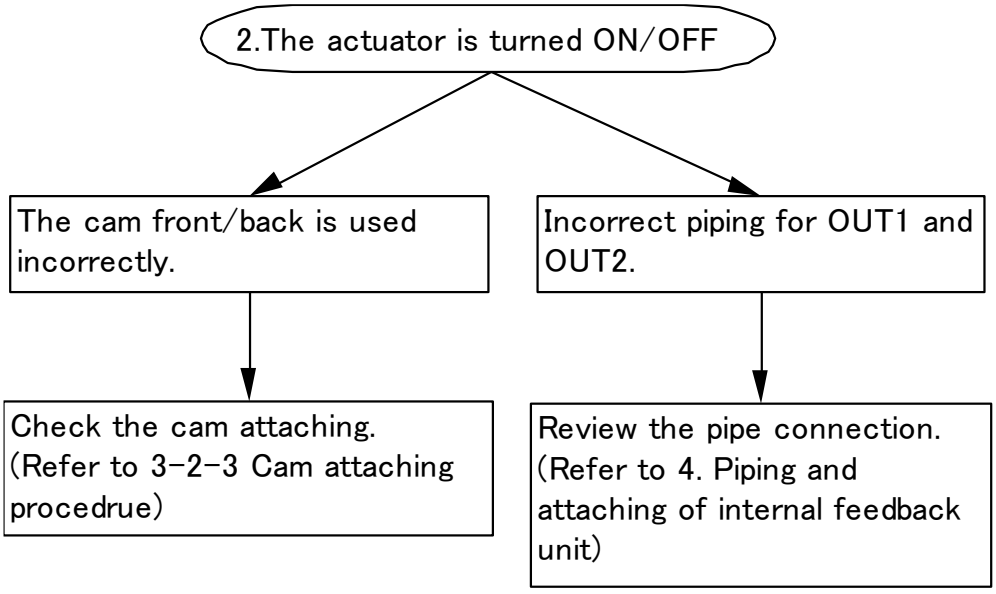

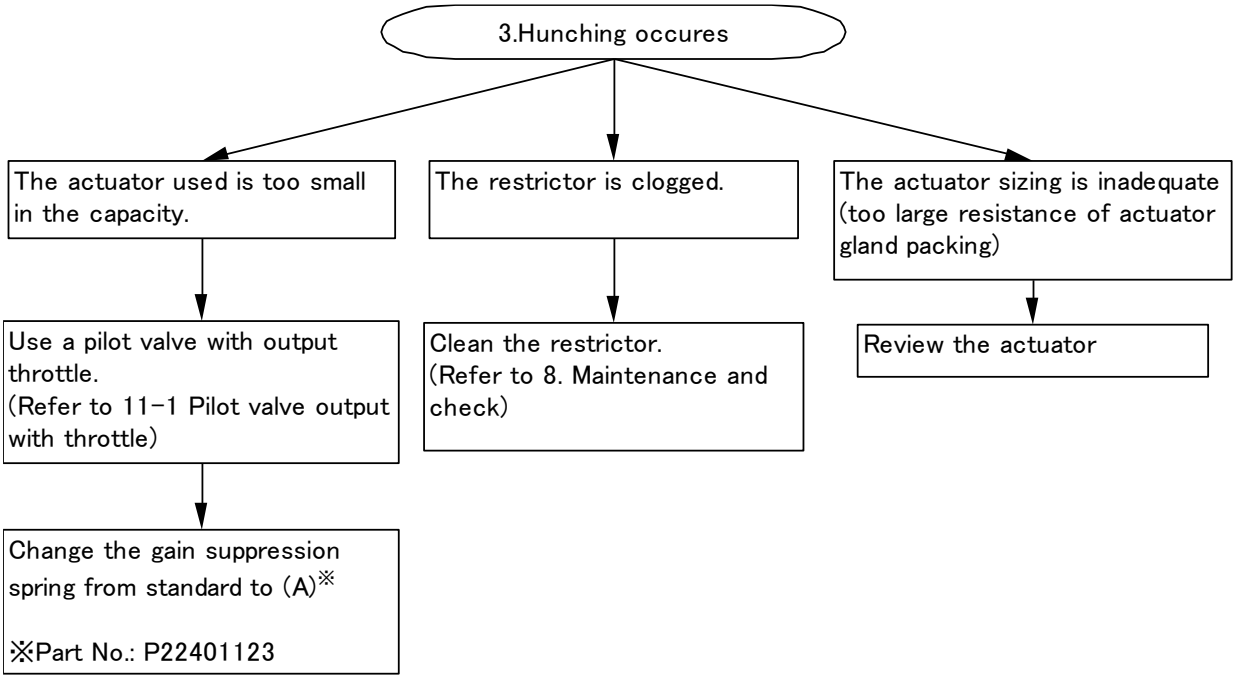
3.Hunching occures
The actuator used is too small in the capacity.
The restrictor is clogged.
The actuator sizing is inadequate (too large resistance of actuator gland packing)
Use a pilot valve with output throttle.
(Refer to 11-1 Pilot valve output with throttle)
Clean the restrictor.
(Refer to 8. Maintenance and check)
Review the actuator
Change the gain suppression spring from standard to (A)※
※Part No.: P22401123

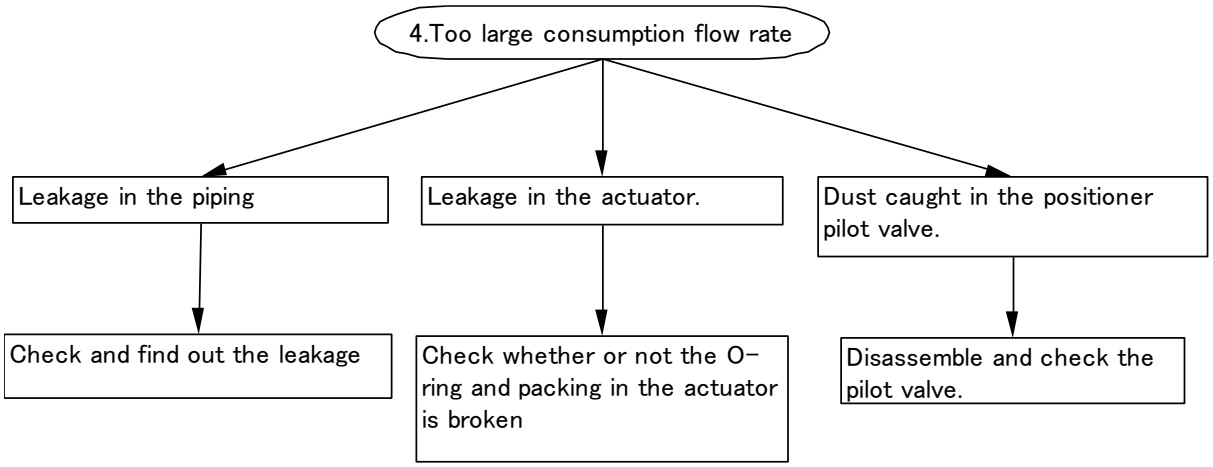
4.Too large consumption flow rate
Leakage in the piping
Leakage in the actuator.
Dust caught in the positioner pilot valve.
Check and find out the leakage
Check whether or not the O-ring and packing in the actuator is broken
Disassemble and check the pilot valve.

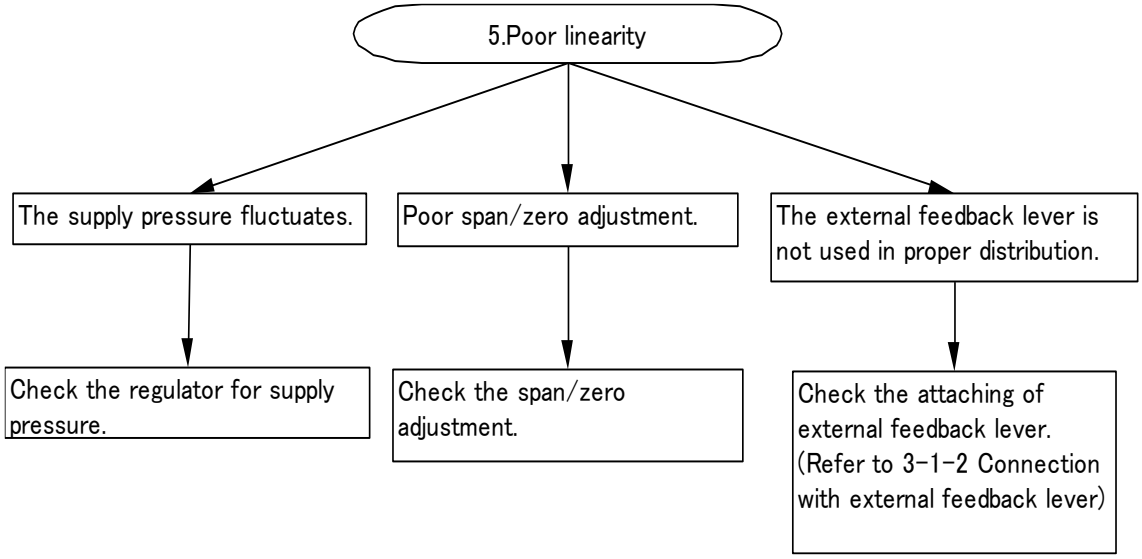
5.Poor linearity
The supply pressure fluctuates.
Poor span/zero adjustment.
The external feedback lever is not used in proper distribution.
Check the regulator for supply pressure.
Check the span/zero adjustment.
Check the attaching of external feedback lever. (Refer to 3-1-2 Connection with external feedback lever)

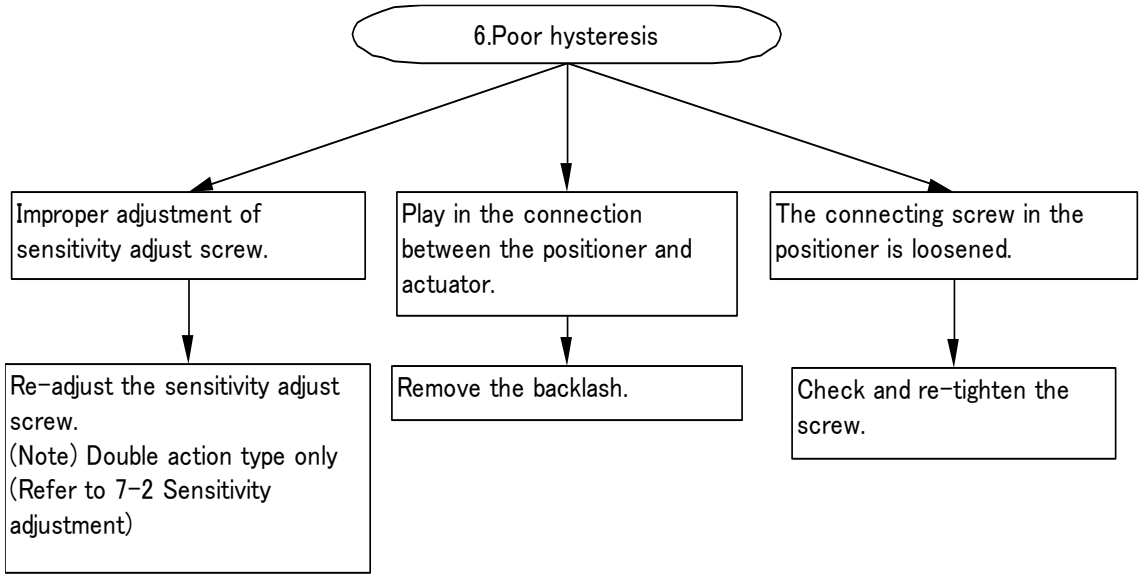
6.Poor hysteresis
Improper adjustment of sensitivity adjust screw.
Play in the connection between the positioner and actuator.
The connecting screw in the positioner is loosened.
Re-adjust the sensitivity adjust screw. (Note) Double action type only (Refer to 7-2 Sensitivity adjustment)
Remove the backlash.
Check and re-tighten the screw.

11.Option

11-1 Pilot valve with output throttle

Hunching may occur when the positioner is attached to a small capacity actuator. In such a case, use a pilot valve having a throttle for OUT1 and OUT2. The throttle is removable. (Refer to Figs.19 and 20 for mounting and dismounting the throttle.)

Table 6 Throttle types

Quite for actuator	Throttling diameter	Part No.	Pilot unit No. having the Throttle shown at left
90cm^3	φ0.7	P36801080	P565010-18
180cm^3	φ1	P36801081	P565010-19

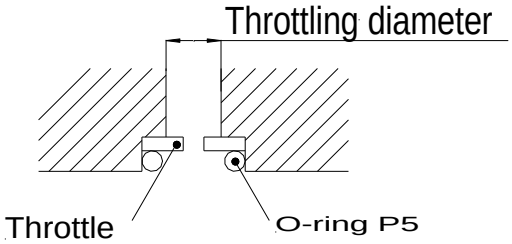

Fig. 19 Throttle mounting

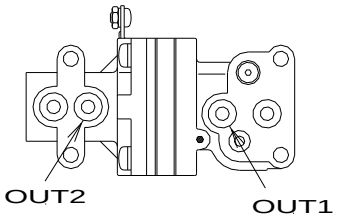

Fig. 20 Pilot valve bottom drawing

(Note 1) When mounting the throttle, pay attention not to let dust and others enter the port hole.
Be sure to mount an O-ring after mounting the throttle.
(Note 2) If the hunching does not stop even after mounting the throttle, use gain suppression spring(A), separately provided.【Part No. P22401123】

11-2 Fork lever type joint (Type IP8100)

Two types of joint, having different attaching sizes for different bracket attaching methods, are available as the fork lever type joint of rotary type IP8100.

Table 7 Type of fork lever type joint

Description	Part No.
Fork lever assembly M	P368010-24
Fork lever assembly S	P368010-25

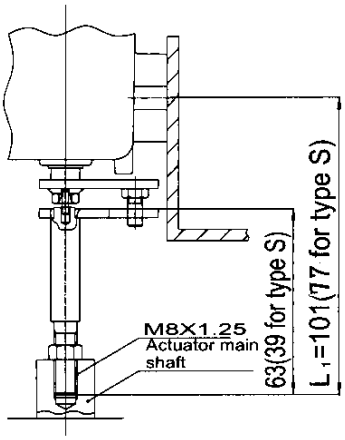

Fig.21 Example of side attaching using fork lever assembly M

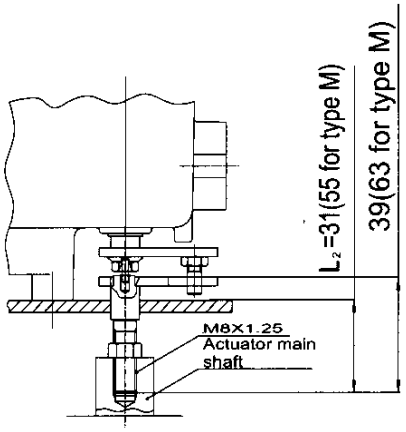

Fig.22 Example of backside attaching using fork lever assembly S

B

In the case of side attaching, if you use fork lever assembly M, it is compatible with our IP610 positioner in the attaching size. Also, in the case of backside attaching, if you use fork lever assembly S, it is compatible with our IP610 positioner in the attaching size.

11-3 External feedback lever (Type IP8000)

Levers having different stroke sizes are available for the feedback lever of lever type IP8000. Order them to match your valve stroke.

Table 8 Feedback lever types

Stroke	Unit No.
10～85mm(Standard accessory)	P368010-20
35～100mm	P368010-21
50～140mm	P368010-22

11-4 Resin cable cramp unit (Type non-explosion protection)

As non-explosion prove resin cable clamp unit used for type without terminal box (IP8※00-※※0), there are two types available which are compatible with different cable in diameter.

The cable is made of resin and available only in the indoor use.

Table 9 Cable cramp unit

Description	Part No.	Suitable cable dia.
Cable cramp unit (A)	P368010-26	φ7～φ9
Cable cramp unit (B)	P368010-27	φ9～φ11

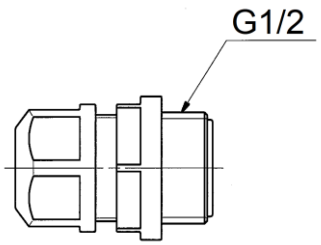

Fig.23 Non-explosion proof resin cable clamp unit

11-5 Scale plate unit

⚠ Caution
Locate scale plate with care not to make finger pinched between needle and plate

Adjustment of scale plate

（1）Perform adjustment of zero span in positioner before installing the positioner to either face of DA or RA with consideration of operating direction.（Refer to Fig. 24.）

（2）Stop positioner at intermediate opening of actuator (where input signal of 50% finishes to enter to the positioner) and adjust the position of needle to meet with 50＋% of scale plate. (Refer to Fig.25) If the needle can't be met with 50+% even with adjustment, stop pressure supply once, reposition fork lever type fitting and cam, and readjust zero span.

（3）At the end of start and stop of actuator, confirm needle points 0% and 100% of scale plate respectively. If the needle points others, position the needle by loosening cross recessed hexagon bolt holding scale plate with spanner and sliding the scale plate. (Refer to Figure 26, 27.)

A

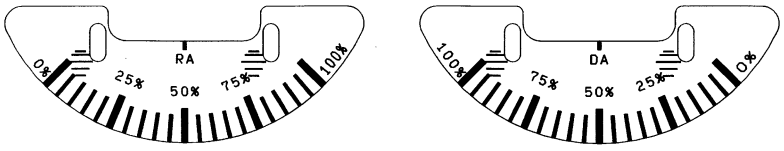

Reverse Normal

Fig.24 Scale plate

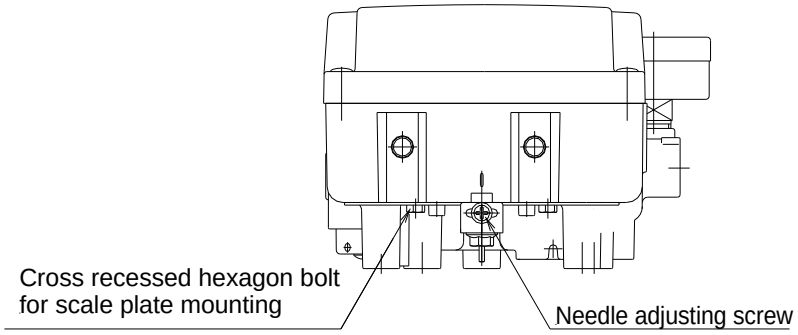

Fig.25 Positioning of needle

Back side

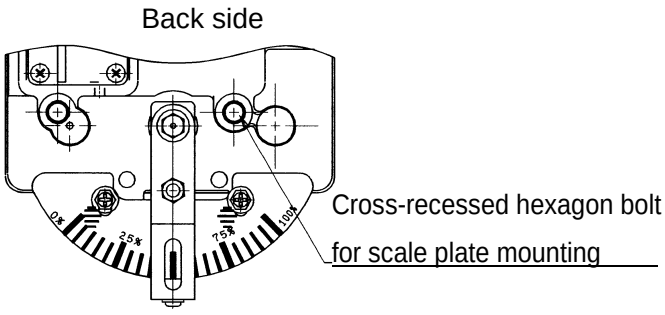

Fig.26 Scale plate (Back side)

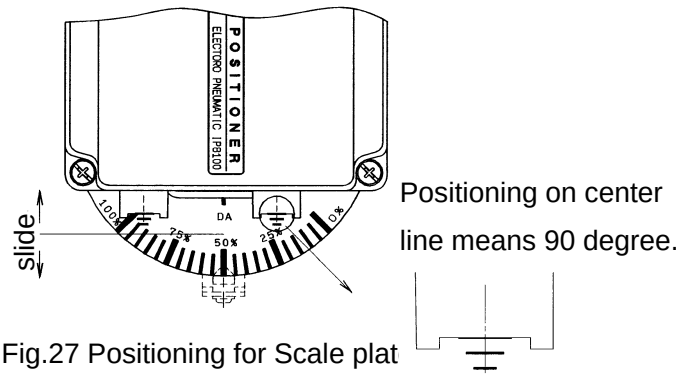

Fig.27 Positioning for Scale plat

12.How to order

IP8＊＊＊－0 ＊ ＊－ ＊ － ＊ － ＊

Type	
000	Lever type
100	Rotary type

Pressure gauge	
Symbol	Pressure
0	None
1	0.2 MPa
2	0.3 MPa
3	1.0 MPa

Construction Note 1)	
0	No terminal box
1	With terminal box (Exsd Ⅱ BT5) TIIS (Japan) explosion-proof

CE marking	
Nil	—
Q	CE marked product

Connection				
Symbol	Air	Electric	Applicable model	
			IP8□00-0□0	IP8□00-0□1
Nil	Rc1/4	G1/2	●	●
M	Rc1/4	M20×1.5	●	—
N	Rc1/4	1/2NPT	●	—
1	1/4NPT	G1/2	●	●
2	1/4NPT	M20×1.5	●	—
3	1/4NPT	1/2NPT	●	—
4	G1/4	G1/2	●	●
5	G1/4	M20×1.5	●	—
6	G1/4	1/2NPT	●	—

Accessories Note 2)			
Symbol	Accessories	Applicable model	
		IP8000	IP8100
Nil	None (Standard)	●	●
A	φ0.7 Output restriction with pilot valve Note 3)	●	●
B	φ1.0 Output restriction with pilot valve Note 3)	●	●
C	Fork lever-type fitting M	—	●
D	Fork lever-type fitting S	—	●
E	For stroke 35 to 100 mm with lever unit Note 4)	●	—
F	For stroke 50 to 140 mm with lever unit Note 4)	●	—
G	Compensation spring(A) Note 5)	●	●
H	With external scale plate	—	●
J	With opening current transmission（4 to 20mADC）/Positive operation Note 6)	—	●
JR	With opening current transmission（4 to 20mADC）/Reverse operation Note 6)	—	●

Note1) For construction No.1(With terminal box), the ambient and fluid temperatures are as follows:

・ExdⅡBT5: －20 to 60°C

・Non-explosion proof(Non hazardous locations only): －20 to 80℃

Label of Explosion-Protected specification(ExdⅡBT5) is on the body.

(See page3 Item: Explosion-protected construction)

Note2) If two or more accessories are required, the part numbers should be made according to alphabetical order (ex. IP8000-011-AG)

Note3) “A” is applied to approx. 90cm^3-capacity actuator.

“B” is applied to approx.180cm^3-capacity actuator.

Note4) Standard lever is not attached.

Note5) The following combinations are available: A+G or B+G

Note6) “J” ,non- Explosion-protected construction ,is applicable only to type with terminal box.

12.Attached Drawing

D

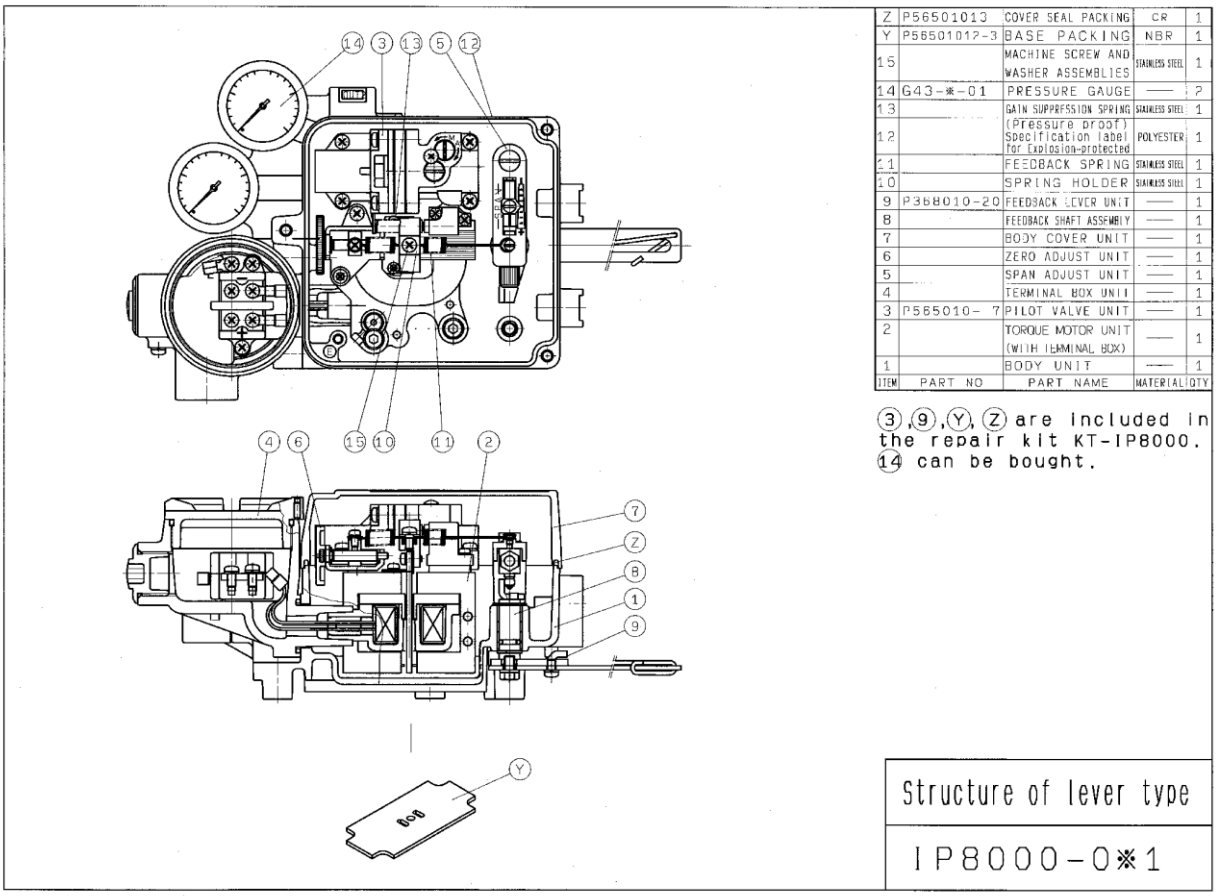

ITEM	PART NO	PART NAME	MATERIAL	QTY
Z	P56501013	COVER SEAL PACKING	CR	1
Y	P56501012-3	BASE PACKING	NBR	1
15		MACHINE SCREW AND WASHER ASSEMBLIES	STAINLESS STEEL	1
14	G43-*-01	PRESSURE GAUGE	——	2
13		GAIN SUPPRESSION SPRING	STAINLESS STEEL	1
12		(Pressure proof) Specification label for Explosion-protected	POLYESTER	1
11		FEEDBACK SPRING	STAINLESS STEEL	1
10		SPRING HOLDER	STAINLESS STEEL	1
9	P368010-20	FEEDBACK LEVER UNIT	——	1
8		FEEDBACK SHAFT ASSEMBLY	——	1
7		BODY COVER UNIT	——	1
6		ZERO ADJUST UNIT	——	1
5		SPAN ADJUST UNIT	——	1
4		TERMINAL BOX UNIT	——	1
3	P565010- 7	PILOT VALVE UNIT	——	1
2		TORQUE MOTOR UNIT (WITH TERMINAL BOX)	——	1
1		BODY UNIT	——	1

③,⑨,Ⓨ,Ⓩ are included in the repair kit KT-IP8000.
⑭ can be bought.

Structure of lever type

IP8000-0※1

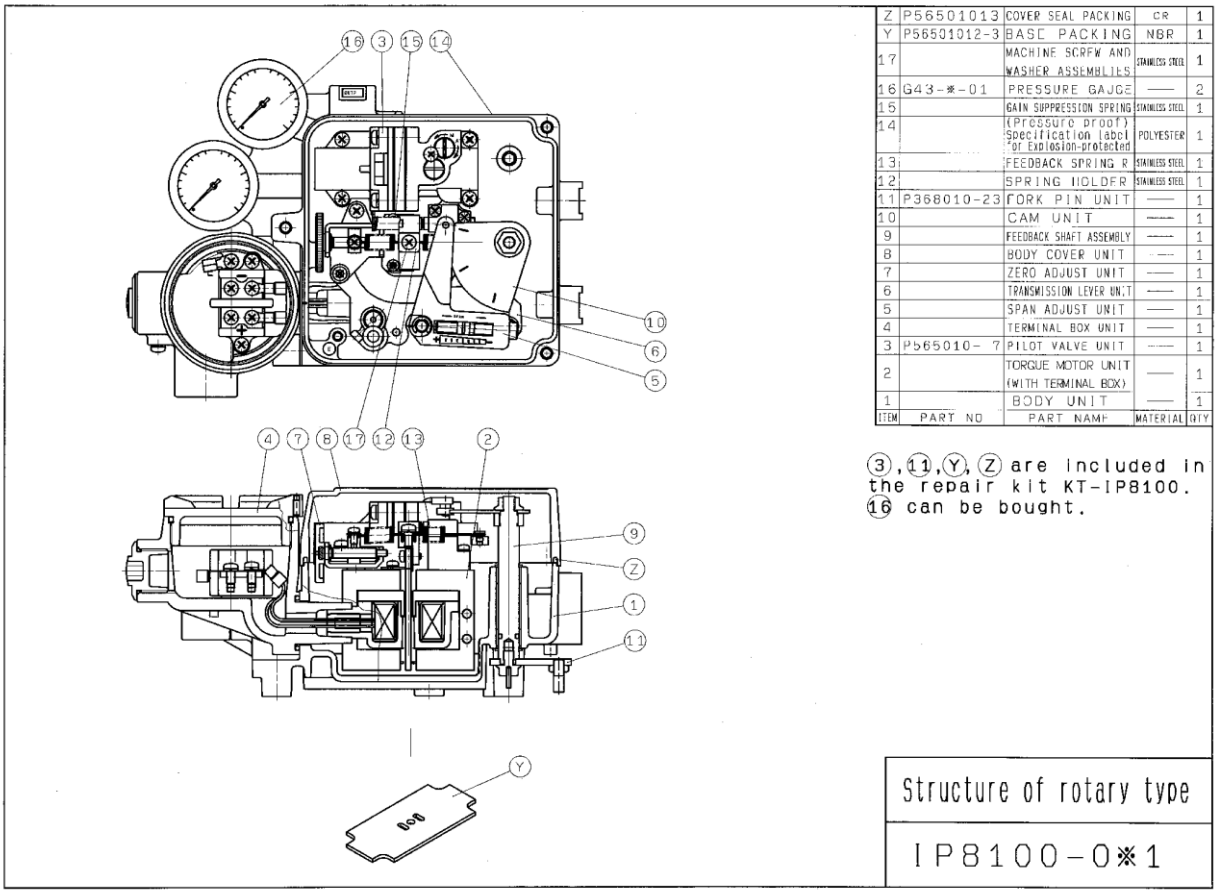

ITEM	PART NO	PART NAME	MATERIAL	QTY
Z	P56501013	COVER SEAL PACKING	CR	1
Y	P56501012-3	BASE PACKING	NBR	1
17		MACHINE SCREW AND WASHER ASSEMBLIES	STAINLESS STEEL	1
16	G43-*-01	PRESSURE GAUGE	——	2
15		GAIN SUPPRESSION SPRING	STAINLESS STEEL	1
14		(Pressure proof) Specification label for Explosion-protected	POLYESTER	1
13		FEEDBACK SPRING R	STAINLESS STEEL	1
12		SPRING HOLDER	STAINLESS STEEL	1
11	P368010-23	FORK PIN UNIT	——	1
10		CAM UNIT	——	1
9		FEEDBACK SHAFT ASSEMBLY	——	1
8		BODY COVER UNIT	——	1
7		ZERO ADJUST UNIT	——	1
6		TRANSMISSION LEVER UNIT	——	1
5		SPAN ADJUST UNIT	——	1
4		TERMINAL BOX UNIT	——	1
3	P565010- 7	PILOT VALVE UNIT	——	1
2		TORQUE MOTOR UNIT (WITH TERMINAL BOX)	——	1
1		BODY UNIT	——	1

③,⑪,Ⓨ,Ⓩ are included in the repair kit KT-IP8100.
⑯ can be bought.

Structure of rotary type

IP8100-0※1

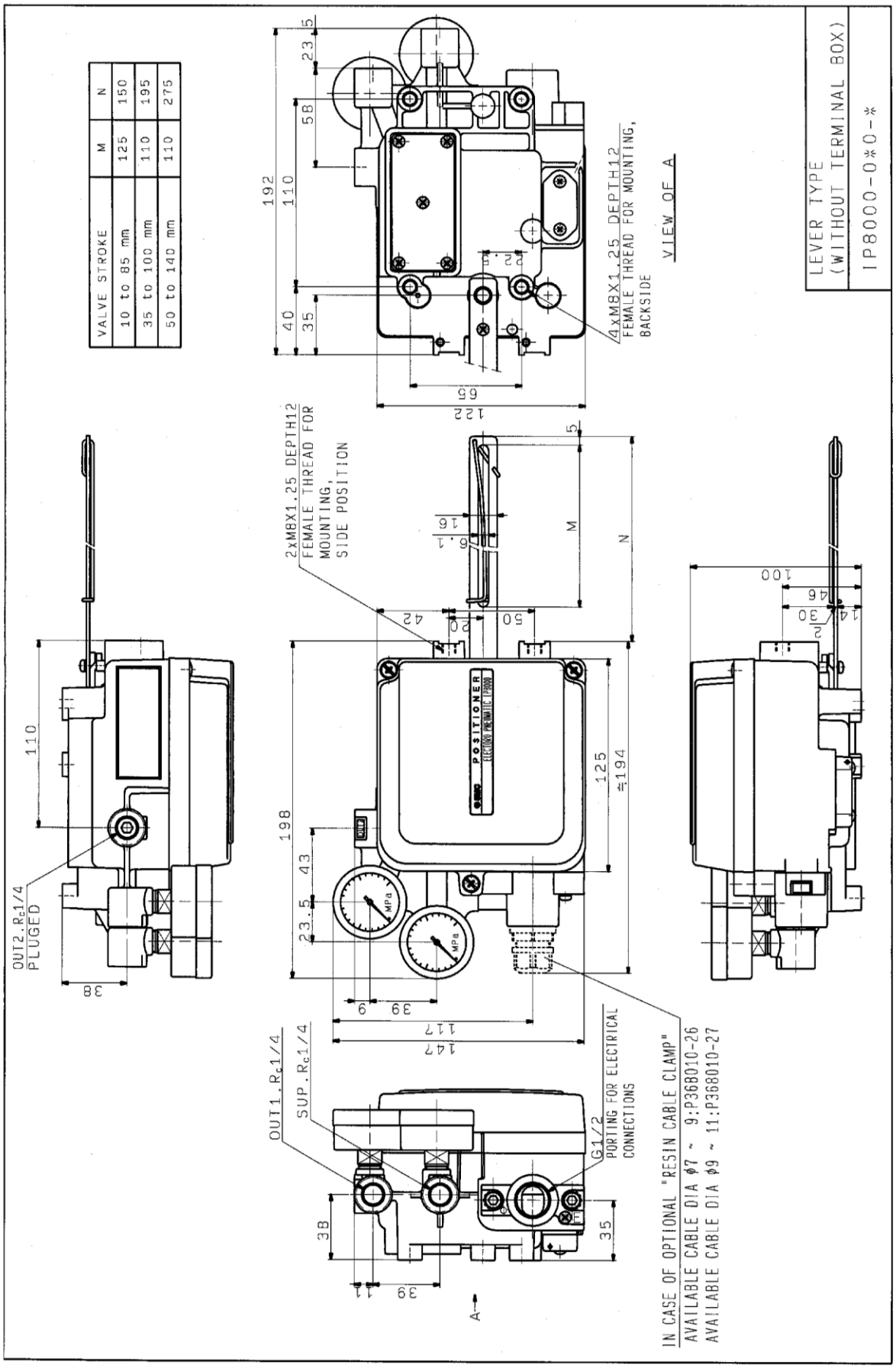
LEVER TYPE
(WITHOUT TERMINAL BOX)
IP8000-0*0-*
VALVE STROKE | M | N
10 to 85 mm | 125 | 150
35 to 100 mm | 110 | 195
50 to 140 mm | 110 | 275
4xM8X1.25 DEPTH12
FEMALE THREAD FOR MOUNTING,
BACKSIDE
VIEW OF A
2xM8X1.25 DEPTH12
FEMALE THREAD FOR
MOUNTING,
SIDE POSITION
OUT2.Rc1/4
PLUGED
OUT1.Rc1/4
SUP.Rc1/4
G1/2
PORTING FOR ELECTRICAL
CONNECTIONS
IN CASE OF OPTIONAL "RESIN CABLE CLAMP"
AVAILABLE CABLE DIA φ7 ~ 9:P36B010-26
AVAILABLE CABLE DIA φ9 ~ 11:P36B010-27

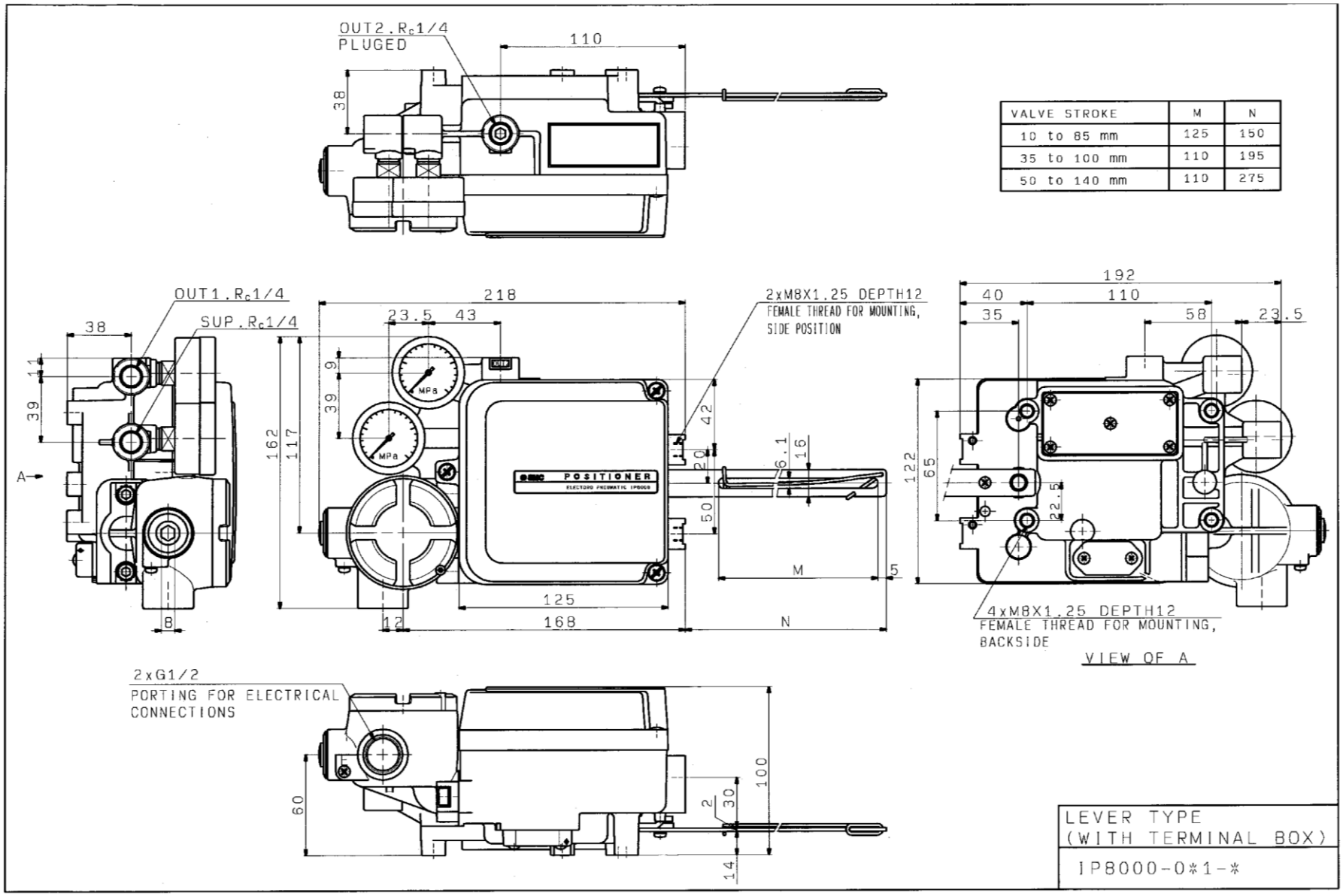

VALVE STROKE	M	N
10 to 85 mm	125	150
35 to 100 mm	110	195
50 to 140 mm	110	275

LEVER TYPE
(WITH TERMINAL BOX)

IP8000-0*1-*

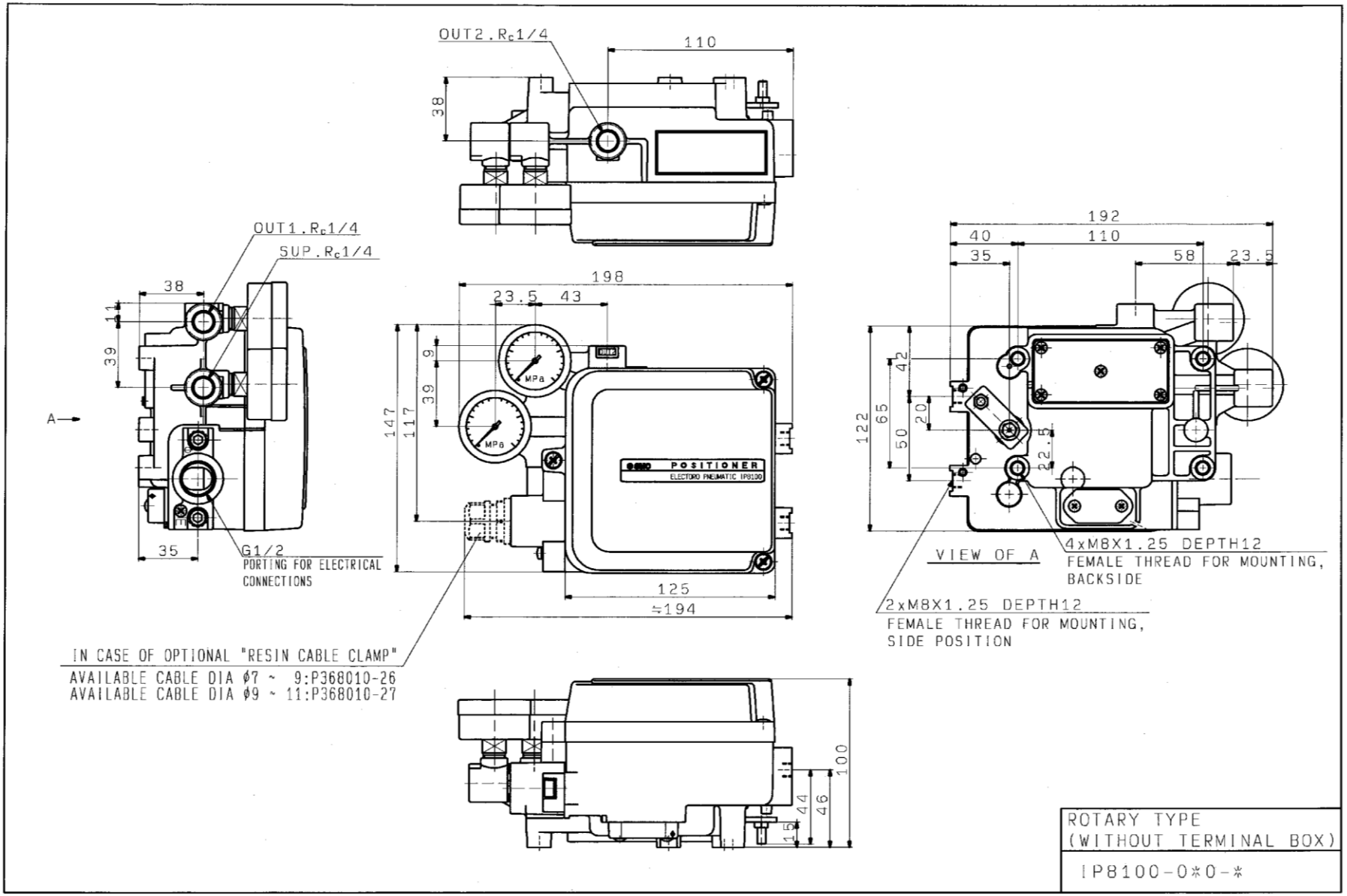
OUT2.Rc1/4
110
38
OUT1.Rc1/4
SUP.Rc1/4
38
11
39
A
198
23.5
43
147
117
39
9
MPa
MPa
SMC
POSITIONER
ELECTRO PNEUMATIC IP8100
125
≒194
35
G1/2
PORTING FOR ELECTRICAL CONNECTIONS
IN CASE OF OPTIONAL "RESIN CABLE CLAMP"
AVAILABLE CABLE DIA ϕ7 ~ 9:P368010-26
AVAILABLE CABLE DIA ϕ9 ~ 11:P368010-27
100
46
44
15
192
40
110
35
58
23.5
122
65
50
42
20
12.5
VIEW OF A
4xM8X1.25 DEPTH12
FEMALE THREAD FOR MOUNTING, BACKSIDE
2xM8X1.25 DEPTH12
FEMALE THREAD FOR MOUNTING, SIDE POSITION
ROTARY TYPE
(WITHOUT TERMINAL BOX)
IP8100-0*0-*

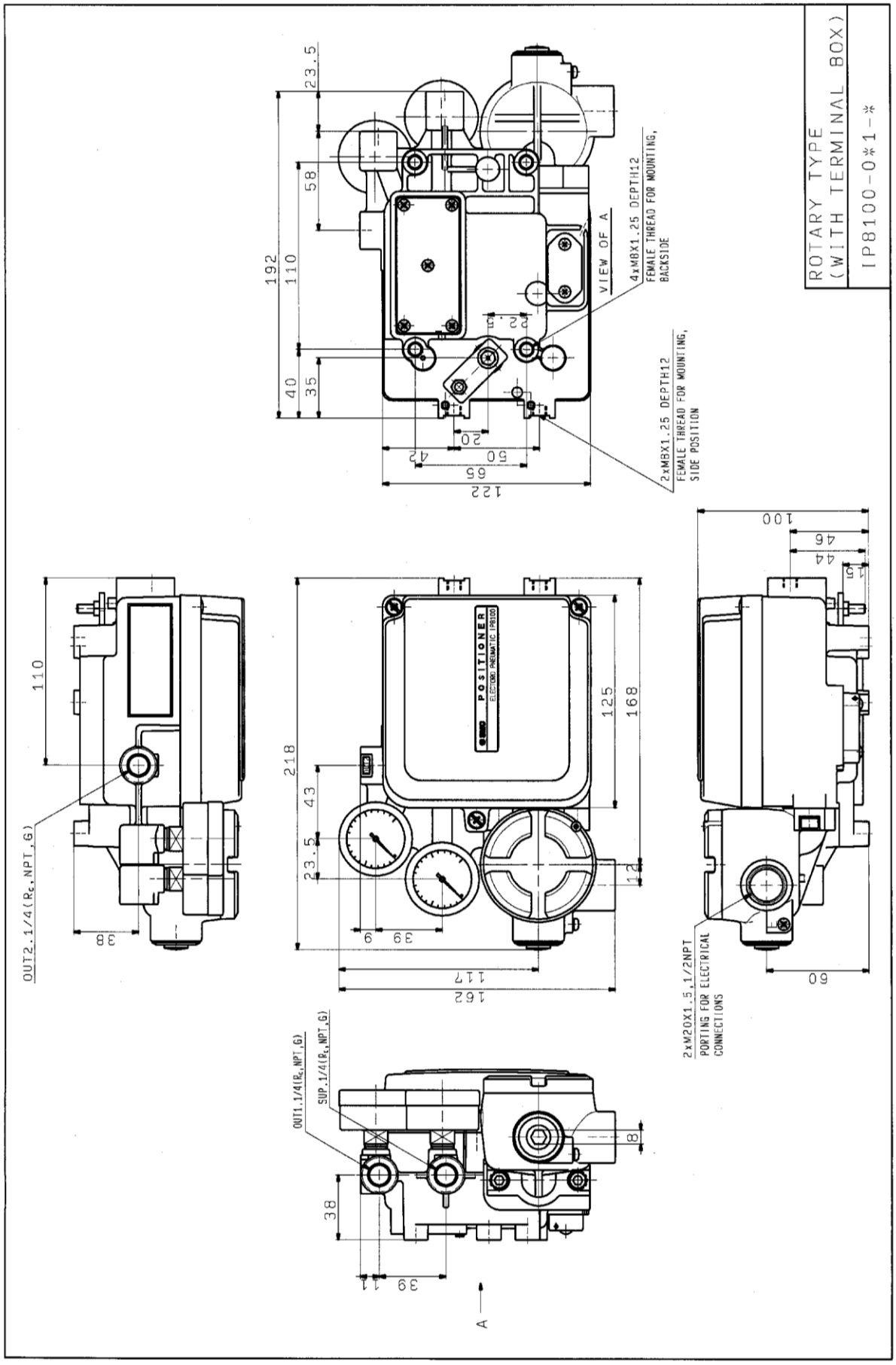
ROTARY TYPE
(WITH TERMINAL BOX)
IP8100-0*1-*
VIEW OF A
4xM8X1.25 DEPTH12
FEMALE THREAD FOR MOUNTING,
BACKSIDE
2xM8X1.25 DEPTH12
FEMALE THREAD FOR MOUNTING,
SIDE POSITION
2xM20X1.5,1/2NPT
PORTING FOR ELECTRICAL
CONNECTIONS
OUT2.1/4(Rc,NPT,G)
OUT1.1/4(Rc,NPT,G)
SUP.1/4(Rc,NPT,G)
POSITIONER
ELECTRO PNEUMATIC IP8100
A

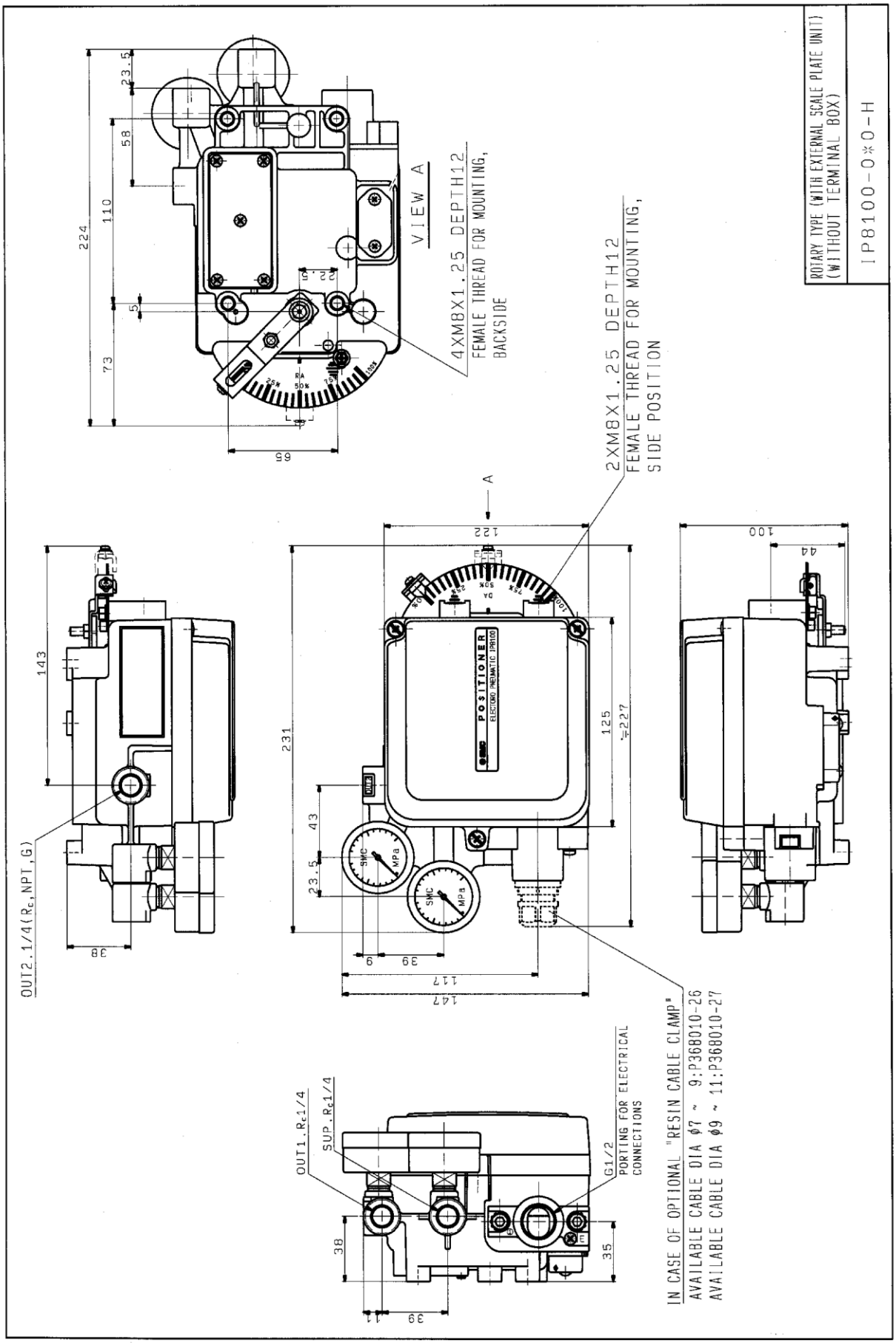
ROTARY TYPE (WITH EXTERNAL SCALE PLATE UNIT)
(WITHOUT TERMINAL BOX)
IP8100-0*0-H
VIEW A
4XM8X1.25 DEPTH12
FEMALE THREAD FOR MOUNTING,
BACKSIDE
2XM8X1.25 DEPTH12
FEMALE THREAD FOR MOUNTING,
SIDE POSITION
POSITIONER
ELECTRO-PNEUMATIC IP8100
OUT2.1/4(Rc,NPT,G)
OUT1.Rc1/4
SUP.Rc1/4
G1/2
PORTING FOR ELECTRICAL
CONNECTIONS
IN CASE OF OPTIONAL "RESIN CABLE CLAMP"
AVAILABLE CABLE DIA φ7 ~ 9:P368010-26
AVAILABLE CABLE DIA φ9 ~ 11:P368010-27

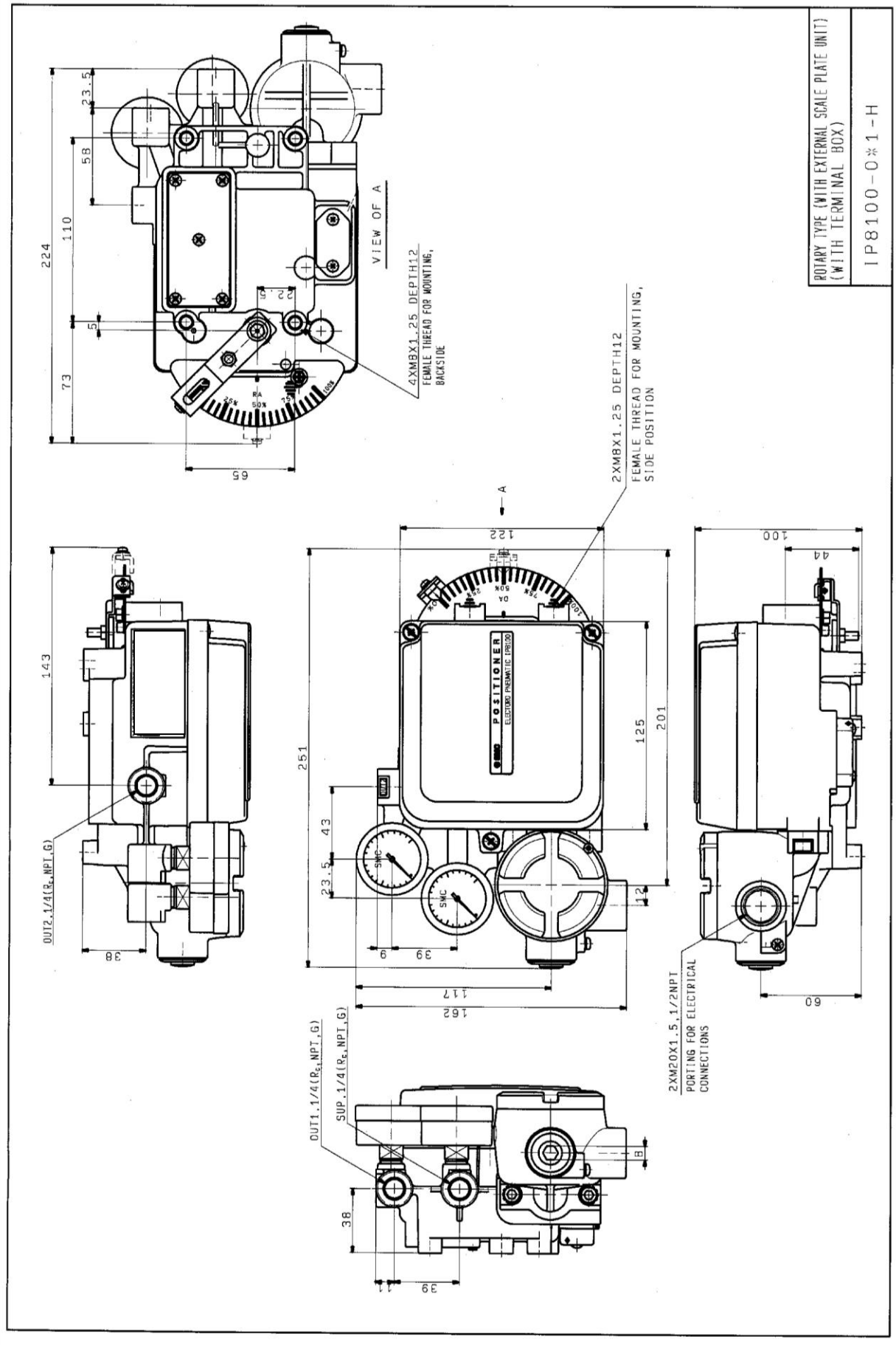
ROTARY TYPE (WITH EXTERNAL SCALE PLATE UNIT)
(WITH TERMINAL BOX)
IP8100-0*1-H
VIEW OF A
4XM8X1.25 DEPTH12
FEMALE THREAD FOR MOUNTING,
BACKSIDE
2XM8X1.25 DEPTH12
FEMALE THREAD FOR MOUNTING,
SIDE POSITION
OUT2.1/4(Rc,NPT,G)
OUT1.1/4(Rc,NPT,G)
SUP.1/4(Rc,NPT,G)
2XM20X1.5,1/2NPT
PORTING FOR ELECTRICAL
CONNECTIONS
POSITIONER
ELECTORO PNEUMATIC IP8100
SMC
224
110
73
58
23.5
5
22.5
65
143
38
122
251
43
23.5
125
201
12
9
39
117
162
100
44
60
11
B

Revision history	
Revision D	10/ 7/2020
Revision E	25/12/2020

SMC Corporation
4-14-1, Sotokanda, Chiyoda-ku, Tokyo 101-0021 JAPAN
Tel: + 81 3 5207 8249 Fax: +81 3 5298 5362
URL https://www.smcworld.com

Note: Specifications are subject to change without prior notice and any obligation on the part of the manufacturer.
© 2019 SMC Corporation All Rights Reserved