Operating instructions

Diaphragm Motor-driven Metering Pump
Sigma/ 2 Control type S2Cb

EN

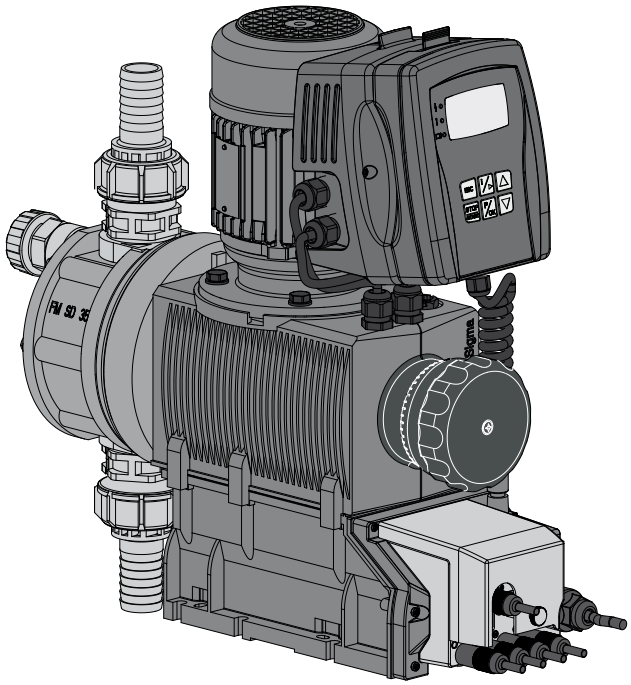

Please carefully read these operating instructions before use. · Do not discard.
The operator shall be liable for any damage caused by installation or operating errors.
The latest version of the operating instructions are available on our homepage.

Supplementary information



Fig. 1: Please read!

Read the following supplementary information in its entirety! Should you already know this information, you will benefit more from referring to the operating instructions.

The following are highlighted separately in the document:

- Enumerated lists

→ Handling instructions

⇨ Outcome of the operation guidelines

- see (reference)

Information

This provides important information relating to the correct operation of the device or is intended to make your work easier.

Safety notes

Safety notes are identified by pictograms - see Safety Chapter.

Validity

At the time of going to press, these operating instructions conformed to the current EU regulations.

State the identity code and serial number

Please state identity code and serial number, which you can find on the nameplate when you contact us or order spare parts. This enables the device type and material versions to be clearly identified.

Table of contents

1 Identity Code 5

2 Safety Chapter 8

3 Storage, Transport and Unpacking 12

4 Overview of equipment and control elements 13

4.1 Key functions 15

4.2 LCD screen identifiers 15

5 Functional Description 18

5.1 Pump 18

5.2 Liquid end 19

5.3 Bleed valve and integrated relief valve 19

5.4 Multi-layer safety diaphragm 20

5.5 Operating modes 20

5.6 Functions 21

5.7 Options 22

5.8 Function and fault indicator 22

5.9 LCD screen 23

5.10 LED Displays 23

5.11 Hierarchy of operating modes, functions and fault statuses 23

6 Assembly 24

7 Installation 26

7.1 Installation, hydraulic 26

7.1.1 Basic installation notes 30

7.2 Installation, electrical 31

7.2.1 Control connectors 32

7.2.2 HMI operating unit 39

7.2.3 Pump, power supply 40

7.2.4 Other units 41

8 Setting 42

8.1 Basic Principles for Setting up the Control 42

8.2 Checking adjustable values / error messages 42

8.3 Changing to set up mode 43

8.4 Selecting the operating mode (Menu "Mode") 44

8.5 Operating mode settings (menu "Settings") 44

8.5.1 "Manual" operating mode settings 45

8.5.2 "Batch" mode settings 45

8.5.3 "Contact" operating mode settings 46

8.5.4 "Analog" operating mode settings 49

8.6 Programmable function settings ("Settings" menu) 52

8.6.1 “Auxiliary frequency” function settings (AUX menu) 52

8.6.2 Settings for the “Calibration” function (CALIBRATION menu) 53

8.6.3 Settings for the “Metering” function (DOSING menu) 54

8.6.4 Settings for the “Dosing monitor” function (DOSING MONITOR menu) 56

8.6.5 Settings for the “Relay” function (RELAY menu) 57

8.6.6 Settings for the “Analog output” function (ANALOG OUTPUT menu) 58

8.6.7 Settings for the “Diaphragm break” function (DIAPHRAGM BREAK menu) 59

8.6.8 Settings in the "System" menu" (SYSTEM menu) 59

8.7 Service (SERVICE menu) 59

8.7.1 Clear counters (CLEAR COUNTERS menu) 60

8.7.2 Adjusting the Display (DISPLAY menu) 60

8.7.3 HMI logout ... 60
8.7.4 Security (SECURITY menu) ... 61
8.8 Information about the pump (INFORMATION menu) ... 62
8.9 Set language (LANGUAGE menu) ... 62
9 Start Up ... 64
10 Operation ... 67
10.1 Manual ... 67
10.2 Remote operation ... 69
11 Maintenance ... 70
12 Carrying out repairs ... 73
12.1 Cleaning valves ... 73
12.2 Replacing the diaphragm ... 75
13 Troubleshooting ... 79
13.1 Faults without a fault message ... 79
13.2 Fault messages ... 80
13.3 Warning messages ... 81
13.4 All Other Faults ... 82
14 Decommissioning ... 83
15 Technical data ... 86
15.1 Performance data ... 86
15.2 Viscosity ... 87
15.3 Shipping weight ... 87
15.4 Wetted materials ... 87
15.5 Ambient conditions ... 87
15.5.1 Ambient temperatures ... 87
15.5.2 Media temperatures ... 88
15.5.3 Air humidity ... 88
15.5.4 Degree of Protection and Safety Requirements ... 88
15.6 Installation height ... 88
15.7 Electrical connection ... 89
15.8 Diaphragm rupture sensor ... 89
15.9 Relay ... 90
15.10 Gear oil ... 90
15.11 Sound pressure level ... 90
16 Design Documents ... 91
17 Declaration of Conformity for Machinery ... 92
18 Operating / adjustment overview ... 93
19 Continuous displays ... 94
20 Index ... 96

1 Identity Code

S2Cb Sigma 2, Control Type, Version b									
Product range									
S2Cb									
	Power end type								
	H	Main power end, diaphragm							
		Type	Capacity						
		_ _ _ _ _ _	Performance data at maximum back pressure and type: refer to nameplate on the pump housing						
			Dosing head material						
			PV	PVDF					
			SS	Stainless steel					
				Seal material					
				T	PTFE				
					Displacement body				
					Steckkopf,	Multi-layer safety diaphragm with optical rupture indicator			
					A	Multi-layer safety diaphragm with rupture signalling by electrical signal			
					H	Diaphragm for hygienic pump head			
						Dosing head design			
						0	without bleed valve, without valve springs		
						1	without bleed valve, with valve springs		
						2	with bleed valve, without valve springs		
						3	with bleed valve, with valve springs		
						4	with relief valve, FPM, without valve springs***		
						5	with relief valve, FPM, with valve springs***		
						6	with relief valve, EPDM, without valve springs***		
						7	with relief valve, EPDM, with valve springs***		
						8	with bleed valve, EPDM, without valve springs***		
						9	with bleed valve, EPDM, with valve springs***		
						H	Hygienic pump head with tri-clamp connectors (max. 10 bar)		
							Hydraulic connector		
							0	Standard threaded connector (in line with technical data)	
							1	Union nut and PVC insert	
							2	Union nut and PP insert	
							3	Union nut and PVDF insert	
							4	Union nut and SS insert	
							7	Union nut and PVDF tube nozzle	
							8	Union nut and SS tube nozzle	
							9	Union nut and SS welding sleeve	
								Design	

S2Cb Sigma 2, Control Type, Version b																						
								0	With ProMinent® logo													
								1	Without ProMinent® logo													
								F	Physiological safety with regard to wetted materials													FDA No. 21 CFR §177.1550 (PTFE) FDA No. 21 CFR §177.2510 (PVDF)
									Electric power supply													
									U	1 ph, 100-230 V ± 10%, 50/60 Hz												
										Cable and plug												
										A	2 m European											
										B	2 m Swiss											
										C	2 m Australian											
										D	2 m USA											
											Relay											
											0	No relay										
											1	Fault indicating relay (230V - 8A)										
											3	Fault indicating relay + pacing relay (24V - 100mA)										
											8	0/4-20 mA analogue output + fault indicating / pacing relay (24V - 100mA)										
												Control version										
												0	Manual + external contact with pulse control									
												1	Manual + external contact with pulse control + analog + dosing profiles									
												5	as 1 + timer									
												6	as 1 + PROFIBUS®-DP interface (M12 plug)									
												7	as 1 + CANopen (M12 plug) **									
													Overload switch-off									
													0	without overload switch-off								
													1	with overload switch-off								
														Operating unit (HMI)								
														Stec kkopf,	HMI (0.5 m cable)							
														1	HMI + 2 m cable							
														2	HMI + 5 m cable							
														3	HMI + 10 m cable							
														X	without HMI							
															Safety options							
															0	Dosing monitor, dynamic, without access control						

S2Cb Sigma 2, Control Type, Version b																	
															1	Dosing monitor, dynamic, with access control	
															Language		
																EN	German
																EN	English
																ES	Spanish
																FR	French

FPM = fluorine rubber

** Pump without HMI control unit

2 Safety Chapter

Identification of safety notes

The following signal words are used in these operating instructions to denote different severities of danger:

Signal word	Meaning
WARNING	Denotes a possibly dangerous situation. If this is disregarded, you are in a life-threatening situation and this can result in serious injuries.
CAUTION	Denotes a possibly dangerous situation. If this is disregarded, it could result in slight or minor injuries or material damage.

Warning signs denoting different types of danger

The following warning signs are used in these operating instructions to denote different types of danger:

Warning signs	Type of danger
	Warning – high-voltage.
	Warning – danger zone.

Intended use

- Only use the pump to meter liquid feed chemicals.
- Only use the pump after it has been correctly installed and started up in accordance with the technical data and specifications contained in the operating instructions.
- Only pumps with the identity code option "Multi-layer safety diaphragm with rupture signalling by electrical signal" are approved for use with flammable feed chemicals, at back pressures of over 2 bar, software setting *„Diaphragm rupture“* - *„Error“* and if the operator takes appropriate safety measures.
- Only pumps with the design "F - Physiological safety with regard to wetted materials" are approved for use with physiologically harmless applications.
- Only “H - Hygienic head” design pumps may be used for applications in accordance with the hygienic requirements of the EHEDG (www.ededg.org).
- Observe the general limitations with regard to viscosity limits, chemical resistance and density - see also the ProMinent Resistance List (in the Product Catalogue or at www.prominent.com)!
- All other uses or modifications are prohibited.
- The pump is not intended for the metering of gaseous media and solids.
- The pump is not intended for the metering of flammable feed chemicals.
- The pump is not intended for operation in areas at risk from explosion.
- The pump is not intended for unprotected outside use.
- The pump is only intended for industrial use.
- The pump should only be operated by trained and authorised personnel, see the following "Qualifications" table.
- You have a responsibility to adhere to the information contained in the operating instructions at the different phases of the unit's service life.

Qualification of personnel

Task	Qualification
Storage, transport, unpacking	Instructed person
Assembly	Technical personnel, Service
Planning the hydraulic installation	Qualified personnel who have a thorough knowledge of oscillating diaphragm pumps.
Hydraulic installation	Technical personnel, Service
Electrical Installation	Electrical technician
Operation	Instructed person
Maintenance, repair	Technical personnel, Service
Decommissioning, disposal	Technical personnel, Service
Troubleshooting	Technical personnel, electrical technician, instructed person, service

Explanation of the table:

Technical personnel

A qualified employee is deemed to be a person who is able to assess the tasks assigned to him and recognise possible dangers based on his technical training, knowledge and experience, as well as knowledge of pertinent regulations.

Note:

A qualification of equal validity to a technical qualification can also be gained by several years of employment in the relevant field of work.

Electrical technician

An electrical technician is able to complete work on electrical systems and recognise and avoid possible dangers independently based on his technical training and experience as well as knowledge of pertinent standards and regulations.

The electrical technician must be specifically trained for the working environment in which he is employed and be conversant with the relevant standards and regulations.

The electrical technician must comply with the provisions of the applicable statutory directives on accident prevention.

Instructed person

An instructed person is deemed to be a person who has been instructed and, if required, trained in the tasks assigned to him and any possible dangers that could result from improper behaviour, as well as having been instructed in the required protective equipment and protective measures.

Service

Customer Service department refers to service technicians, who have received proven training and have been authorised by ProMinent or ProMaqua to work on the system.

Safety information



WARNING!

Warning of hazardous feed chemical

Should a dangerous feed chemical be used: it may escape from the hydraulic components when working on the pump, material failure or incorrect handling of the pump.

- Take appropriate protective measures before working on the pump (e.g. safety glasses, safety gloves, ...). Adhere to the material safety data sheet for the feed chemical.
- Drain and flush the liquid end before working on the pump.



WARNING!

Danger from hazardous substances!

Possible consequence: Fatal or very serious injuries.

Please ensure when handling hazardous substances that you have read the latest safety data sheets provided by the manufacture of the hazardous substance. The actions required are described in the safety data sheet. Check the safety data sheet regularly and replace, if necessary, as the hazard potential of a substance can be re-evaluated at any time based on new findings.

The system operator is responsible for ensuring that these safety data sheets are available and that they are kept up to date, as well as for producing an associated hazard assessment for the workstations affected.



CAUTION!

Warning of feed chemical spraying around

Feed chemical can spray out of the hydraulic components if they are manipulated or opened due to pressure in the liquid end and adjacent parts of the system.

- Disconnect the pump from the mains power supply and ensure that it cannot be switched on again by unauthorised persons.
- Depressurise the system before commencing any work on hydraulic parts.



CAUTION!

Warning of feed chemical spraying around

An unsuitable feed chemical can damage the parts of the pump that come into contact with the chemical.

- Take into account the resistance of the wetted materials and the [ERROR: Missing definition for variable "Hersteller"!] Resistance List when selecting the feed chemical - see the [ERROR: Missing definition for variable "Hersteller"!] Product Catalogue or visit [ERROR: Missing definition for variable "Hersteller"!].



CAUTION!

Danger of personnel injury and material damage

The use of untested third party parts can result in personnel injuries and material damage.

– Only fit parts to metering pumps, which have been tested and recommended by ProMinent.



CAUTION!

Danger from incorrectly operated or inadequately maintained pumps

Danger can arise from a poorly accessible pump due to incorrect operation and poor maintenance.

– Ensure that the pump is accessible at all times.
– Adhere to the maintenance intervals.



WARNING!

An on/off switch may not be fitted on the pump, dependent on the identity code and installation.

Isolating protective equipment

All isolating protective equipment must be installed for operation:

- Drive front cover
- Motor fan cowling
- Motor terminal box cover
- Hood

In exactly the same way, plug all relays, modules and options into the hood - if available.

Only remove them when the operating instructions request you to do so.

Information in the event of an emergency

In the event of an electrical accident, disconnect the mains cable from the mains or press the emergency cut-off switch fitted on the side of the system!

If feed chemical escapes, also depressurise the hydraulic system around the pump as necessary. Adhere to the safety data sheet for the feed chemical.

Sound pressure level

Sound pressure level LpA < 70 dB according to EN ISO 20361

at maximum stroke length, maximum stroke rate, maximum back pressure (water)

3 Storage, Transport and Unpacking

Safety information

WARNING!

Only return the metering pump for repair in a cleaned state and with a flushed liquid end - refer to the chapter "Decommissioning"!

Only return metering pumps with a completed Decontamination Declaration form. The Decontamination Declaration constitutes an integral part of an inspection / repair order. A unit can only be inspected or repaired when a Declaration of Decontamination Form is submitted that has been completed correctly and in full by an authorised and qualified person on behalf of the pump operator.

The "Decontamination Declaration Form" can be found at www.prominent.com.

WARNING!

Slings can tear

ProMinent only supplies “non-reusable slings” in accordance with DIN EN 60005. They can tear with repeated use.

– Destroy and remove the slings as soon as the pump has been lifted into its final position.

CAUTION!

Danger of material damage

The device can be damaged by incorrect or improper storage or transportation!

– The unit should only be stored or transported in a well packaged state - preferably in its original packaging.
– Only transport the unit when the red gear bleeding plug is pushed in.
– The packaged unit should also only be stored or transported in accordance with the stipulated storage conditions.
– The packaged unit should be protected from moisture and the ingress of chemicals.

Scope of delivery

Compare the delivery note with the scope of supply:

Storage

Personnel: ■ Technical personnel

1. Plug the caps on the valves.
2. Check if the red gear bleeding plug is pushed in.
3. Preferably place the pump standing vertically on a pallet and secure against falling over.
4. Cover the pump with a tarpaulin cover - allowing rear ventilation.

Store the pump in a dry, sealed place under the ambient conditions according to chapter "Technical Data".

4 Overview of equipment and control elements

Overview of Equipment

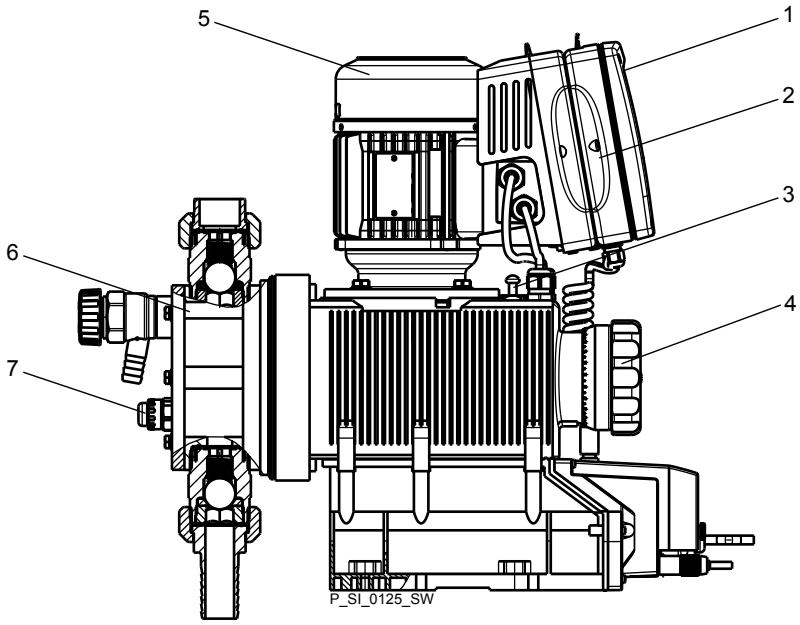

Fig. 2: Overview of equipment S2Cb

1 HMI control unit
2 Frequency converter
3 Drive unit
4 Stroke length adjustment wheel
5 Drive motor
6 Liquid end
7 Diaphragm rupture sensor

Control elements

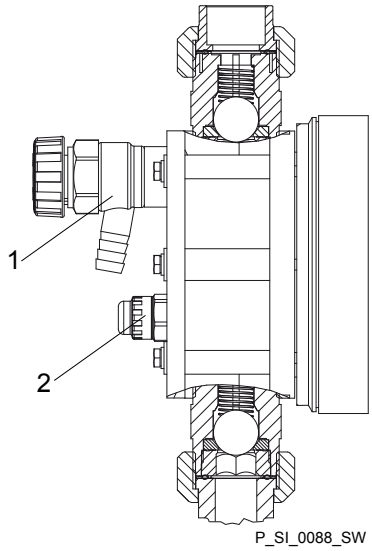

Fig. 3: Sigma control elements

1 Bleed valve or relief valve (dependent on identity code)
2 Diaphragm rupture sensor (visual)

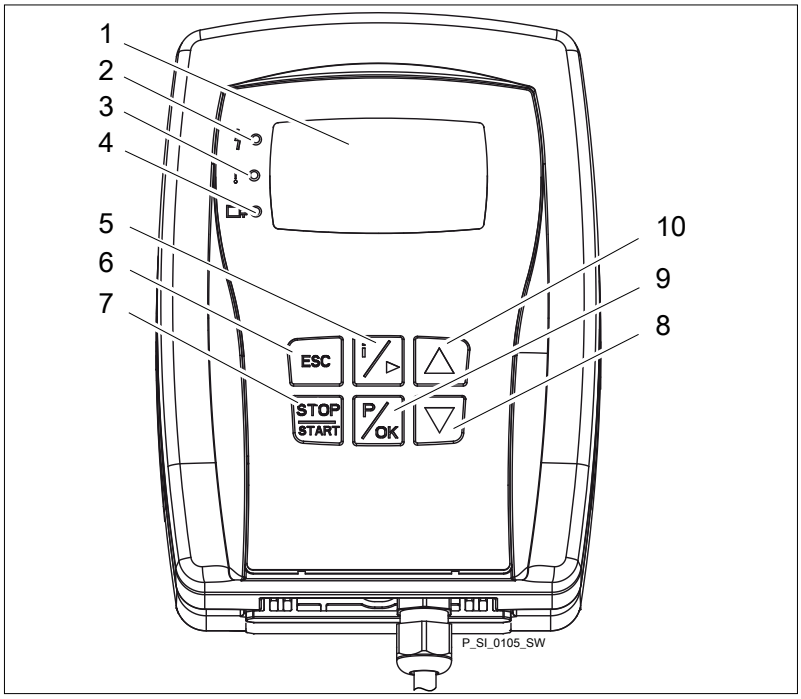

Fig. 4: HMI control elements

1 LCD screen
2 Fault indicator (red)
3 Warning indicator (yellow)
4 Operating indicator (green)
5 *[i]* key / Cursor to right
6 *[ESC]* key
7 *[START/STOP]* key
8 *[DOWN]* key
9 *[P / OK]* key
10 *[UP]* key

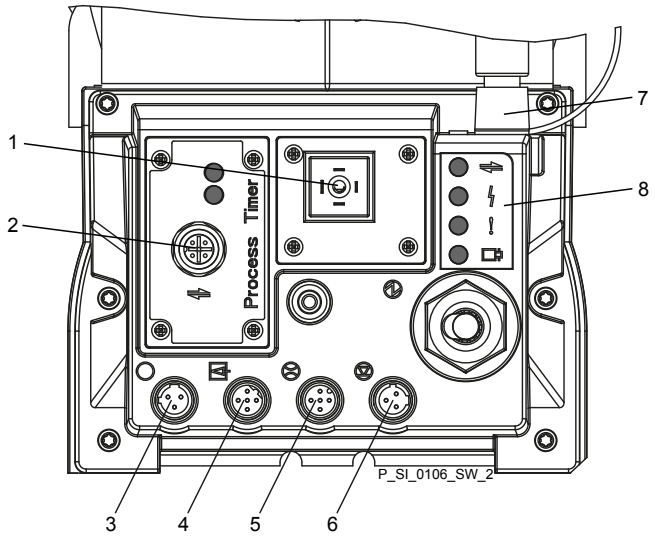

Fig. 5: Connector cover control elements

1 Relay and mA-output (option)
2 Optional module slot (timer, PROFIBUS®)
3 "Diaphragm rupture" terminal
4 "External control" terminal
5 "Dosing monitor" terminal
6 "Level Switch" terminal
7 "CAN-bus" port (external)
8 LEDs (as Fig. 4) and status LED CAN bus (external)
not shown Stroke length adjustment wheel

4.1 Key functions

Key	Application	In continuous displays (operation)	In adjustment mode (set up)
			
[STOP/START]	Pressed briefly	Stop pump,	Stop pump,
		start pump	start pump
			
[P / OK]	Pressed briefly	Start batch (only in *„Batch“* operating mode), Acknowledge errors	Confirm entry - jump to next menu option or to continuous display
	Pressed for 2 s	Change to adjustment mode	-
			
[i / >]	1x short press	Change between the continuous displays Change between the secondary displays	Change between "Changing individual numbers" and "Changing a number" Change to the next digit
	1x long press	Change from the continuous displays to the secondary displays	
			
[UP], [DOWN]	Pressed briefly	Change directly changeable variables	Select another setting, change individual number or number.
	Simultaneous long press	Priming	-
			
[ESC]	Pressed briefly	-	Jumps back one menu level
	Pressed for 2s	-	Jumps to a continuous display Exit the setting menu without saving

4.2 LCD screen identifiers

The LCD screen supports the operation and adjustment of the pump using different identifiers:

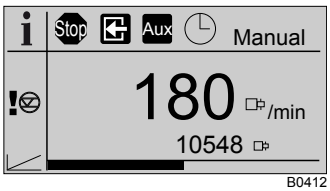

B0412

The identifiers and information in the various fields of the LCD screen have different meanings:

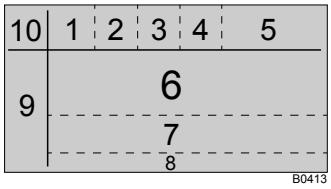

1 Operating main display
2 Source indicator for stop
3 Auxiliary operation / Diaphragm break sensor deactivated
4 Module option
5 Mode
6 Main display
7 Secondary display
8 Display type (number of pages)
9 Other identifiers, error source indicator
10 Continuous display identifier (" i " as "Info")

The identifiers have the following meanings:

Field no.	Icon	Name	Meaning
1		Stop	The pump is stopped. Cause see field 2.
1	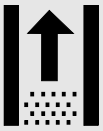	Priming	The pump is currently priming (both *[arrow keys]* pressed).
2		Manual	The pump was stopped manually.
2		External signal	The pump was externally stopped by the Pause contact.
2		Timer	The pump was stopped via the timer.
2	CAN open	CANopen	The pump was stopped via the external CAN bus.
2	Profi bus	PROFIBUS®	The pump was externally stopped by the PROFIBUS®.
3	Aux	Auxiliary	The pump is currently pumping with the auxiliary frequency as the stroke rate. During this time, the pump is in *„Manual“* operating mode.
3	dia	Diaphragm rupture	A diaphragm rupture sensor is connected, but deactivated.
4		Timer	The "Timer" option is active.
4	CAN open	CANopen	The "CANopen" option is active.
4	Profi bus	PROFIBUS®	The "PROFIBUS®" option is active.

Field no.	Icon	Name	Meaning
5	MANUAL	*„Manual“*	*„Manual“* operating mode
5	CONTACT	*„Contact“*	*„Contact“* operating mode
5	BATCH	*„Batch“*	*„Batch“* operating mode
5	ANALOG	*„Analog“*	*„Analog“* operating mode
9		Error	A fault exists.
9	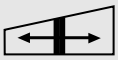	Stroke length adjustment	Deviation in the stroke length from the value set at the time of the last locking of the setting menu.
9		Flow control	A flow control is connected.
9	m	Memory	The pump is in operating mode *„Contact“* or *„Batch“* and the auxiliary function "Memory" is set.
9	0..20	0...20 mA	The pump is in operating mode *„Analog“*. The processing type *„0...20“* is set.
9	4..20	4...20 mA	The pump is in operating mode *„Analog“*. The processing type *„4...20“* is set.
9		Linear	The pump is in operating mode *„Analog“*. The processing type *„Curve“*-*„Linear“* is set.
9		Upper sideband	The pump is in operating mode *„Analog“*. The processing type *„Curve“*-*„Upper sideband“* is set.
9		Lower sideband	The pump is in operating mode *„Analog“*. The processing type *„Curve“*-*„Lower sideband“* is set.
10	i	Continuous display	A continuous display appears on the LCD screen.
10		Security	Security lock (if a code was set).



For identifiers which appear in response to errors, see the "Troubleshooting" chapter.

5 Functional Description

5.1 Pump

The metering pump is an oscillating diaphragm pump, the stroke length of which can be adjusted. An electric motor drives the pump. The slide rod transmits the stoke motion to the diaphragms.

Illustration of the stroke movement

The stroke movement of the displacement body is continuously measured and regulated so that the stroke is executed according to a previously set dosing profile, see chapter *„Metering“ „setting“*.

The following dosing profiles are available:

- Normal
- Discharge opti.
- Suction opti.

Every metering profile is ineffective below the switch-over frequency for Start/Stop mode.

Normal

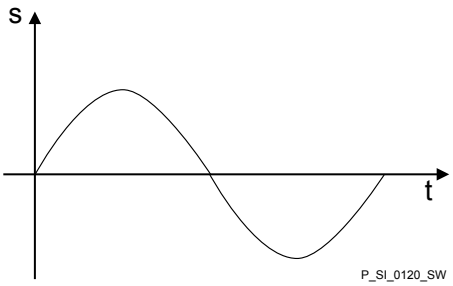

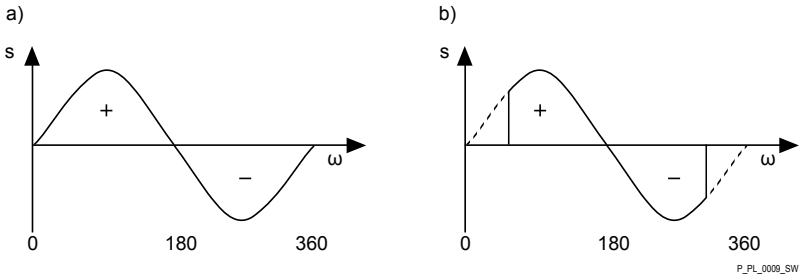

Fig. 6: Stroke movement at a) maximum stroke length and b) reduced stroke length.

s Stroke velocity
ω Cam rotational angle
\+ Discharge stroke
\- Suction stroke

Discharge opti.

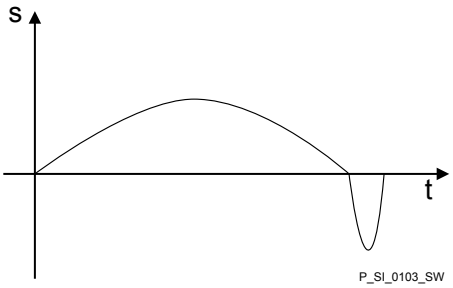

With a discharge optimised dosing profile, the discharge stroke is elongated, the suction stroke is executed as quickly as possible. This setting is for example suitable for those applications that require optimum mixing ratios and as continuous as possible chemical mixing.

Suction opti.

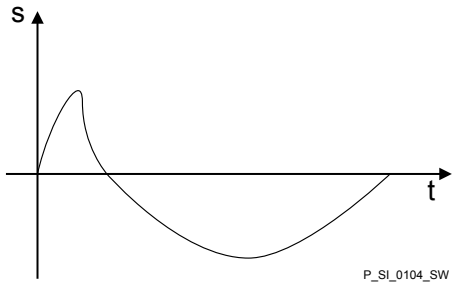

With a suction optimised dosing profile, the suction stroke is elongated as much as possible, which makes possible a precise and problem-free dosing of viscous and gaseous media. Select this setting to minimise the NPSH value as well.

5.2 Liquid end

The diaphragm (2) hermetically shuts off the pump volume of the dosing head (4) towards the outside. The suction valve (1) closes as soon as the diaphragm (2) is moved in to the dosing head (4) and the feed chemical flows through the discharge valve (3) out of the dosing head. The discharge valve (3) closes as soon as the diaphragm (2) is moved in the opposite direction due to the vacuum pressure in the dosing head and fresh feed chemical flows through the suction valve (1) into the dosing head. One cycle is thus completed.

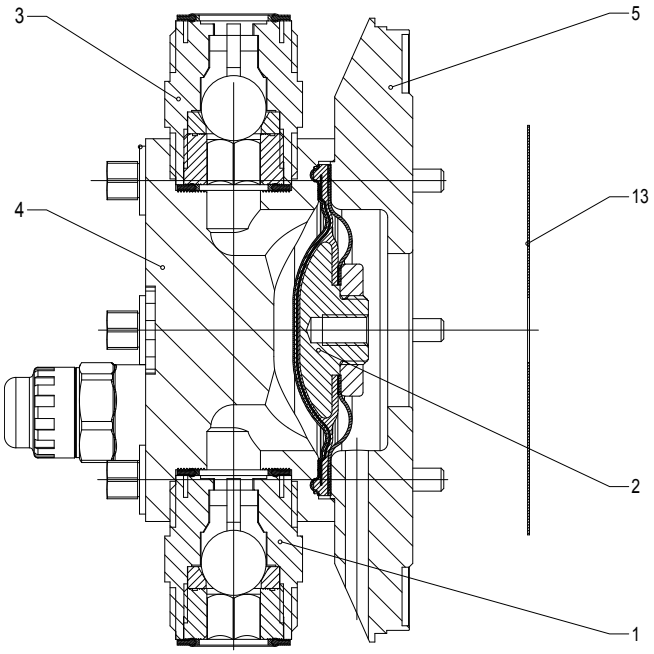

Fig. 7: Cross-section through the liquid end

1 Suction valve
2 Diaphragm
3 Discharge valve
4 Dosing head
5 Backplate
13 Safety diaphragm

5.3 Bleed valve and integrated relief valve

Bleed valve

Turning the rotary dial (3) on the bleed valve to "open" causes it to open and the liquid end can be bled. Or it is used as a priming aid for priming against pressure. The feed chemical flows out through the hose connection (5), e.g. into a storage tank.

Integral relief valve

The integral relief valve operates in the "close" position as a simple, directly controlled **relief valve**. As soon as the pressure exceeds the pressure value, which is preset using the large spring (1), it lifts the ball (2). The feed chemical flows out through the hose connection (5), e.g. into a storage tank.

The integral relief valve can only protect the motor and the gear, and then only against impermissible positive pressure that is caused by the metering pump itself. It cannot protect the system against positive pressure.

The integral relief valve works as a **bleed valve** as soon as the rotary dial (3) is turned to "open": The valve opens and the liquid end can be bled. Or it is used as a priming aid for priming against pressure.

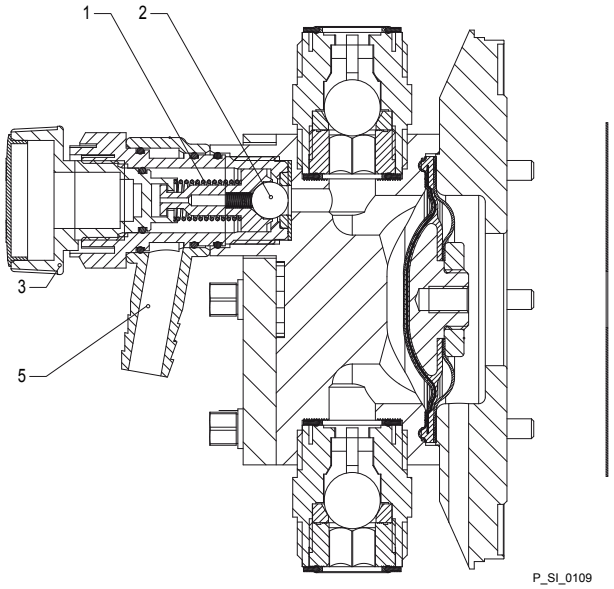

Fig. 8: Relief valve and integrated relief valve

1 Spring, large
2 Ball
3 Rotary dial
5 Hose connection

5.4 Multi-layer safety diaphragm

With the **visual** diaphragm rupture sensor, the lowered red cylinder (6) springs forward beneath the transparent cover (7) so that it then becomes clearly visible Fig. 9.

With the **electrical** diaphragm rupture sensor, a switch is switched. A connected signalling device must signal the diaphragm rupture.

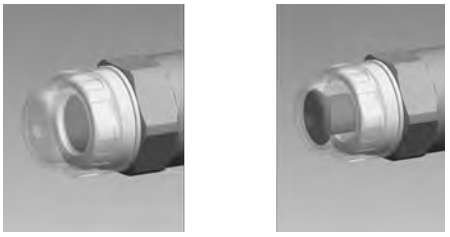

Fig. 9: Visual diaphragm rupture sensor, triggered and untriggered

The electrical diaphragm rupture sensor is connected to the "diaphragm rupture indicator" terminal. If a diaphragm ruptures, the red LED "Fault" display lights up on the pump and the identifier "Error" and *„dia“* flash on the LCD screen.

5.5 Operating modes

The operating modes are selected via the *„Mode“* menu (dependent on the identity code, some operating modes may not be present):

„Analog“ operating mode The stroke rate is controlled using an analog current signal via the "External control" terminal The processing of the current signal can be preselected via the control unit.

„Manual“ operating mode The stroke rate is set manually via the control unit.

„Contact“ operating mode: This operating mode provides the option of making fine adjustments using small scaling or transfer factors. Metering can be triggered either by a pulse received via the "External control" terminal or through a contact or a semiconductor switching element. A metering quantity (batch) or a number of strokes (scaling or transfer factor 0.01 to 100.00) can be pre-selected via the control unit using the *„Factor“* setting.

„Batch“ operating mode: This operating mode provides the option of working with large transfer factors (up to 99,999). The metering can be triggered either by pressing the *[P]* key or by a pulse received via the "External control" terminal or through a contact or a semiconductor switching element. It is possible to pre-select a metering quantity (batch) or a number of strokes via the control unit.

„BUS“ operating mode (Identity code, control variant: CANopen or PROFIBUS® DP interface). This operating mode provides the option of controlling the pump via BUS (see “Supplementary instructions for ProMinent delta and Sigma with PROFIBUS®".

5.6 Functions

The following function can be ordered via the identity code:

Booster pump (optional): The pump can issue an electronic warning and switch off if a tolerance range is exceeded. The overload switch-off is to protect the pump, not the system. In the event of overloading, the pump signals an error via the LED displays, the LCD screen (*„p+“* or *„blockade“*) and - if fitted – the fault indicating relay.

The following functions can be selected using the *„Settings“* menu:

"Calibrate" function: The pump can also be operated in the calibrated state in all operating modes. In this case, the corresponding continuous displays can then indicate the metering volume or the capacity directly. Calibration is maintained throughout the stroke rate range. The calibration is also maintained when the stroke length is altered by up to ±10% scale divisions.

"Auxiliary frequency" function: Enables a freely selectable and programmable stroke rate to be switched on in the *„Settings“* menu, which can be controlled via the "external control" terminal. This auxiliary frequency has priority over the operating mode stroke rate settings.

"Flow" function: Stops the pump when the flow is insufficient, provided a dosing monitor is connected. The number of defective strokes, after which the pump is switched off, can be set in the *„Settings“* menu.

The following functions are available as standard:

"Level switch" function: Information about the liquid/powder level in the chemical feed container is reported to the pump control. To do so, a two-stage level switch must be fitted; it is connected to the "Level switch" terminal.

"Pause" function: The pump can be remotely stopped via the "External Control" terminal. The "Pause" function only works via the "External Control" terminal.

The following functions are triggered by a key press:

"Stop" function: The pump can be stopped without disconnecting it from the mains/power supply by pressing the *[STOP/START]* key.

"Priming" function: Priming (short-term transport at maximum frequency) can be triggered by simultaneous pressing of the two arrow keys.

5.7 Options

Relay option

The pump has several connection possibilities for the following options:

"Output relay" option: In the event of fault signals, warning signals, stopping of the pump or tripped level switches, the relay connects to complete an electric circuit (for alarm horns etc.).

The relay can be retrofitted via a knock-out in the drive unit.

The various functions can be adjusted, see "Settings" - "Relay".

"Fault indicating and semiconductor relay" option In the event of fault signals, warning signals, stopping of the pump or tripped level switches, the fault indicating relay connects to complete an electric circuit (for control panel etc.).

In addition to the fault indicating relay, the pacing relay can be used to make a contact every stroke.

Other functions can be adjusted, see "Settings" - "Relay". The option can be retrofitted via a knock-out in the drive unit.

Option "0/4-20 mA analog current output and fault indicating relay"

The current output I signal indicates the pump's actual calculated metering volume.

The option "0/4-20 mA analog current output and fault indicating relay" can be retrofitted via a knock-out in the control unit.

Additionally the option always provides a semiconductor relay, see above. Other functions can be adjusted, see "Settings" - "Relay".

5.8 Function and fault indicator

The operating and fault statuses are indicated by the three LED indicators and the *„Error“* identifier on the LCD screen, see also the "Troubleshooting" chapter.

5.9 LCD screen

If a fault occurs, the identifier *„Error“* appears and an additional error message.

5.10 LED Displays

CANopen status display (green): The CANopen status indicator shows the status of the CANopen bus.

Colour	Flash code	Cause	Consequence	Remedy
green	illuminated	Bus status OPERATIONAL	Normal bus mode	-
green	flashing	Bus status PRE-OPERATIONAL	currently no measured value communication	wait briefly. Disconnect HMI then reconnect
red	any	Bus error	no measured value transmission	Check whether the CAN connection is faulty. Notify Service

Contact customer service in the event of all other flash codes.

Fault indicator (red): The fault indicator illuminates if a fault occurs e.g. liquid level low 2nd stage".

Warning indicator (yellow): The warning indicator illuminates if the pump electronics detect a condition which may lead to a fault, e.g. "liquid level low 1st stage".

Operating indicator (green): The operating indicator illuminates provided the pump is correctly connected to the operating voltage. The operating indicator goes out briefly with every stroke.

5.11 Hierarchy of operating modes, functions and fault statuses

The different operating modes, functions and fault statuses have a different effect on if and how the pump reacts.

The following list shows the order:

1. - Priming
2. - Fault, Stop, Pause
3. - Auxiliary frequency (external frequency changeover)
4. - Manual, external contact, batch, external analog

Comments:

re 1 - "Priming" can take place in any mode of the pump (providing it is functioning).

re 2 - "Fault", "Stop" and "Pause" stop everything apart from "Priming".

re 3 - The "Auxiliary frequency" stroke rate always has priority over the stroke rate specified by an operating mode listed under 4.

6 Assembly

Refer to the correct dimensional drawings on our website www.prominent.com for assistance.

Compare the dimensions on the dimension sheet with those of the pump.

Base

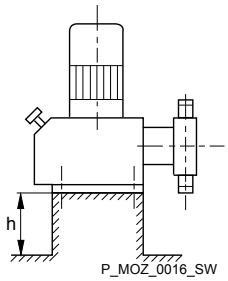

Fig. 10

WARNING!

Danger of electric shock

If water or other electrically conducting liquids penetrate into the drive housing, in any other manner than via the pump's suction connection, an electric shock may occur.

– Position the pump so that it cannot be flooded.

WARNING!

The pump can break through the base or slide off it

– Ensure that the base is horizontal, flat and permanently load-bearing.

CAUTION!

If your Sigma S2Cb is to be installed in place of a Sigma S2Ca, a base plate order no. 1044841 is possibly needed to lift the liquid end.

Capacity too low

Vibrations can disturb the liquid end valves.

– *Do not allow the base to vibrate.*

Space requirement

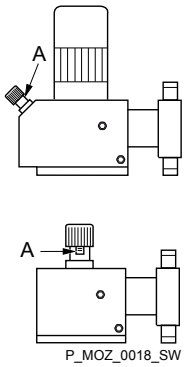

Fig. 11

CAUTION!

Danger from incorrectly operated or inadequately maintained pumps

Danger can arise from a poorly accessible pump due to incorrect operation and poor maintenance.

– Ensure that the pump is accessible at all times.
– Adhere to the maintenance intervals.

Position the pump so that control elements, such as the stroke length adjustment knob, the indicating dial A or the oil inspection window, are accessible.

In so doing, ensure there is enough space to carry out an oil change (vent screws, oil drain plugs, oil trough ...).

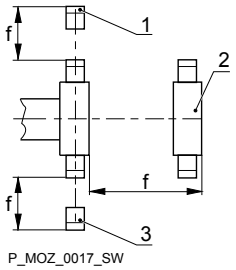

Fig. 12

If the HMI is mounted remotely from the pump: a clearly marked Stop mechanism must be installed in the direct vicinity of the pump for emergencies!

1 Discharge valve
2 Dosing head
3 Suction valve

Ensure there is sufficient free space (f) around the dosing head as well as the suction and discharge valve so that maintenance and repair work can be carried out on these components.

Liquid end alignment

Capacity too low

The liquid end valves cannot close correctly if they are not upright.

– *Ensure that the discharge valve is upright.*

Fastening

Capacity too low

Vibrations can disturb the liquid end valves.

– *Secure the metering pump so that no vibrations can occur.*

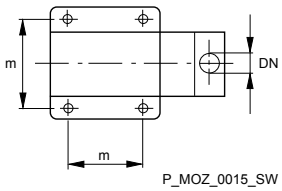

Fig. 13

Take the dimensions (m) for the fastening holes from the appropriate dimensions- or data sheets.

Use appropriate bolts to fix the pump base to the supporting floor.

Mounting the HMI user control

If ordered with the wall mounting, the HMI can be mounted directly on a wall.

Install the HMI in the immediate vicinity of the pump. If not provided for, fit a circuit breaker there - refer to the "Installation, electrical" chapter. Ensure that the system is arranged ergonomically.

When doing so, consider the available cable length.

Prevent tripping hazards.

Refer to the relevant dimensional drawing for the dimensions of the HMI and fixing holes.

CAUTION!

Warning of faulty operation

– Do not install the HMI and cable too close to devices and cabling that emit strong electrical interference.

7 Installation



CAUTION!

Danger of injury to personnel and material damage

The disregard of technical data during installation may lead to personal injuries or damage to property.

– Observe the technical data- refer to chapter "Technical Data" and, where applicable, the operating instructions of the accessories.

7.1 Installation, hydraulic



WARNING!

Danger of fire with flammable feed chemicals

– Only metering pumps with the identity code option "Multi-layer safety diaphragm with rupture signalling with electrical signal" are permitted to meter flammable media, with back pressures over 2 bar and if the operator takes appropriate safety precautions.



WARNING!

Warning of feed chemical reactions to water

Feed chemicals that should not come into contact with water may react to residual water in the liquid end that may originate from works testing.

– Blow the liquid end dry with compressed air through the suction connector.
– Then flush the liquid end with a suitable medium through the suction connector.



WARNING!

The following measures are an advantage when working with highly aggressive or hazardous feed chemicals:

– Install a bleed valve with recirculation in the storage tank.
– Install an additional shut-off valve on the discharge or suction ends.



CAUTION!

Warning of feed chemical spraying around

PTFE seals, which have already been used / compressed, can no longer reliably seal a hydraulic connection.

– New, unused PTFE seals must always be used.



CAUTION!

Suction problems are possible

The valves may no longer close properly with feed chemicals with a particle size of greater than 0.3 mm.

– Install a suitable filter in the suction line.

CAUTION!

Warning of the discharge line rupturing

With a closed discharge line (e.g. from a clogged discharge line or by closing a valve), the pressure that the metering pump generates can reach several times more than the permissible pressure of the system or the metering pump. This could lead to lines bursting resulting in dangerous consequences with aggressive or hazardous feed chemicals.

– Install a relief valve that limits the pressure of the pump to the maximum permissible operating pressure of the system.

CAUTION!

Warning against bursting of the suction or discharge lines

Hose lines with insufficient pressure rating may burst.

– Only use hose lines with the required pressure rating.

CAUTION!

Uncontrolled flow of feed chemical

Feed chemical can press through the metering pump in an uncontrolled manner in the event of excessive priming pressure on the suction side of the metering pump.

– Do not exceed the maximum permissible priming pressure for the metering pump.
– Set up the installation properly.

CAUTION!

Warning about lines coming loose

If suction, discharge and relief lines are installed incorrectly, they can loosen / disconnect from the pump connection.

– Only use original hoses with the specified hose diameter and wall thickness.
– Only use clamp rings and hose nozzles that fit the respective hose diameter.
– Always connect the lines without mechanical tension.

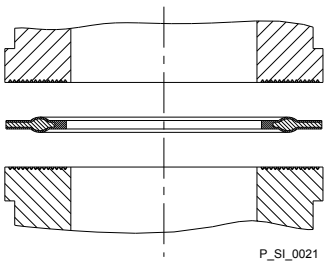

Fig. 14: Moulded composite seals with corrugated insert

CAUTION!

Warning against leaks

Leaks can occur on the pump connection depending on the insert used.

– The pump is supplied with PTFE moulded composite seals with a flare, which are used for the pump connections. They seal the connections between grooved pump valves and the grooved inserts from ProMinent - see *Further information on page 26*.
– In the event that an unflared insert is used (e.g. third party part), an elastomer flat seal must be used - see *Further information on page 26*.

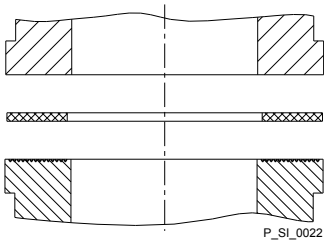

Fig. 15: Elastomer flat seal for a smooth insert

- *Precise metering is only possible when the back pressure is maintained above 1 bar at all times.*
- *If metering at atmospheric pressure, a back pressure valve should be used to create a back pressure of approx. 1.5 bar.*

CAUTION!

Warning of backflow

A back pressure valve, spring-loaded injection valve, relief valve, foot valve or a liquid end do not represent absolutely leak-tight closing elements.

- Use a shut-off valve, a solenoid valve or a vacuum breaker for this purpose.

CAUTION!

To check the pressure conditions in the piping system it is recommended that connecting options are provided for a manometer close to the suction and pressure connector.

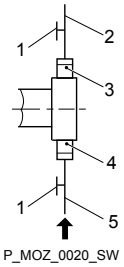

Fig. 16: Manometer connecting options

1 Manometer socket
2 Discharge line (pipe)
3 Discharge valve
4 Suction valve
5 Suction line (pipe)

CAUTION!

Connect the pipelines to the pump so that no residual forces act on the pump, e.g. due to the offsetting, weight or expansion of the line.

Only connect steel or stainless steel piping via a flexible piping section to a plastic liquid end.

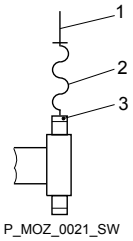

Fig. 17: Steel pipeline at the liquid end

1 Steel piping
2 Flexible pipe section
3 Plastic liquid end

Integral relief valve or integral bleeder valve

WARNING!

Product can be dangerously contaminated

Only with the design "Physiologically safety with regard to wetted materials".

If the integral bleed valve or the integral relief valve opens, the feed chemical comes into contact with physiologically harmful seals.

- Do not route feed chemical that escapes from the integral bleed valve or the integral relief valve back into the process.

CAUTION!

Danger due to incorrect use of the integral relief valve

The integral relief valve can only protect the motor and the gear, and then only against impermissible positive pressure that is caused by the metering pump itself. It cannot protect the system against positive pressure.

– Protect the motor and gear of the system against positive pressure using other mechanisms.
– Protect the system against illegal positive pressure using other mechanisms.

CAUTION!

Warning of feed chemical spraying around

If no overflow line is connected to the integral relief valve or the integral bleeder valve, feed chemical will spray out of the hose connector as soon as the relief valve opens.

– Always connect an overflow line to the integral relief valve or the integral bleeder valve and feed it back into the storage tank or - if required by the regulations - into a special storage tank.

CAUTION!

Danger of cracking

Cracking of the PVT liquid end can occur if a metal overflow line is connected to the relief valve.

– Never connect a metal overflow line to the relief valve.

CAUTION!

Danger of the integral relief valve failing

The integral relief valve no longer operates reliably with feed chemicals having a viscosity of greater than 200 mPa s.

– Only use the integral relief valve with feed chemicals having a viscosity up to 200 mPa s.

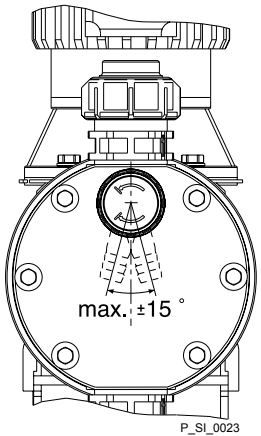

Fig. 18: Permissible alignment of the relief valve

CAUTION!

Warning against leaks

Feed chemical, which remains in the overflow line at the relief valve or bleeder valve, can attack the valve or cause it to leak

– Route the overflow line with a continuous slope and moreover with the tube nozzle pointed downwards - see .

If the overflow line is fed into the suction line, the bleed function is blocked.

Therefore lead the overflow line back into the storage tank.

When operating the integral relief valve close to the opening pressure, a minimal overflow into the overflow line can occur.

Diaphragm rupture sensor

CAUTION!

Danger resulting from unnoticed diaphragm rupture

If the pump has been ordered with an electric diaphragm rupture sensor, it still has to be installed.

– Screw the enclosed diaphragm rupture sensor into the liquid end.

CAUTION!

Warning of unnoticed diaphragm rupture

Only above approximately 2 bar system back pressure is a signal generated upon a diaphragm rupture.

– Only rely on the diaphragm rupture sensor at back pressures greater than 2 bar.

7.1.1 Basic installation notes

Safety notes

CAUTION!

Danger resulting from rupturing hydraulic components

Hydraulic components can rupture if the maximum permissible operating pressure is exceeded.

– Never allow the metering pump to run against a closed shut-off device.
– With metering pumps without integral relief valve: Install a relief valve in the discharge line.

CAUTION!

Hazardous feed chemicals can escape

With hazardous feed chemicals: Hazardous feed chemical can leak out when using conventional bleeding procedures with metering pumps.

– Install a bleed line with a return into the storage tank.

→ Shorten the return line so that it does not dip into the feed chemical in the storage tank.

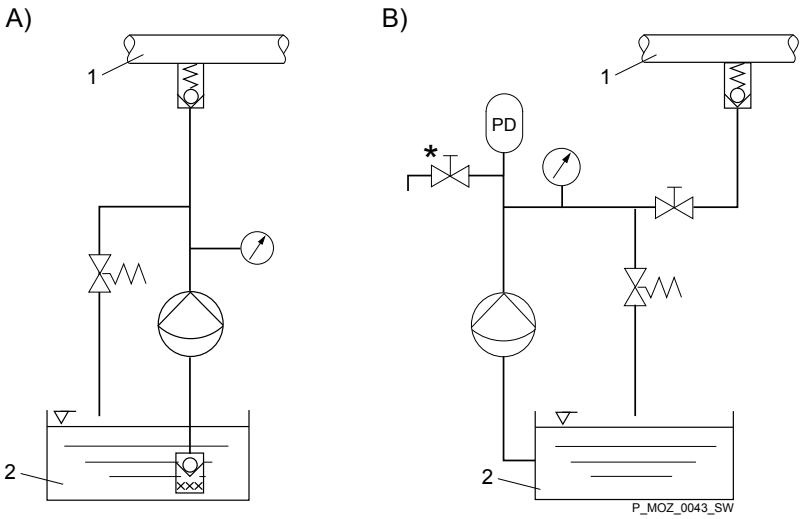

Fig. 19: (A) standard installation, (B) with pulsation damper

1 Main line
2 Storage tank

Legend for hydraulic diagram

Symbol	Explanation	Symbol	Explanation
	Metering pump		Foot valve with filter meshes
	Injection valve		Level switch
	Multifunctional valve		Manometer

7.2 Installation, electrical

General safety notes

WARNING!
Danger of electric shock
Unprofessional installation may lead to electric shocks.

– Crimp cable end sleeves onto all shortened cable cores.
– Only allow technically trained personnel to undertake the electrical installation of the device.

WARNING!
Danger of electric shock
A mains voltage may exist inside the motor or electrical ancillaries.

– If the housing of the motor or electrical ancillaries has been damaged, you must disconnect it from the mains immediately. Only return the pump to service after an authorised repair.

CAUTION!
Use ProMinent cables to avoid unnecessary problems.

What requires electrical installation?

What requires electrical installation?

- Level switch
- Diaphragm rupture sensor, electrical (option)
- Metering monitoring (option)
- Relay (option)
- External control
- mA Output (Optional)
- Bus connector (optional)
- Timer (option)
- Pump, power supply

7.2.1 Control connectors



CAUTION!

Incoming signals can remain without effect

If the universal control wire, the external/pacing cable or the level monitoring cable is shortened below 1.20 m, the pump does not detect that it is connected. Consequently a warning message (for example) can be suppressed.

– Do not shorten this cable below 1.20 m.

Level switch, diaphragm rupture sensor (option) and dosing monitor (option)

Connect the plugs of the level switch, diaphragm rupture sensor and dosing monitor to the corresponding sockets on the front side of the control. In case of uncertainty - see chapter "Overview of equipment and control elements"



CAUTION!

Danger resulting from unnoticed diaphragm rupture

All pumps ordered with an electric diaphragm rupture sensor need to be electrically installed.

– Electrically connect the enclosed diaphragm rupture sensor.

Only with flammable media:



WARNING!

Fire danger

The electric diaphragm rupture sensor must stop the pump immediately after a diaphragm rupture and trigger an alarm.

The pump must only be returned to service once a new diaphragm has been fitted.

7.2.1.1 Relay

7.2.1.1.1 Fault indicating relay 230 V

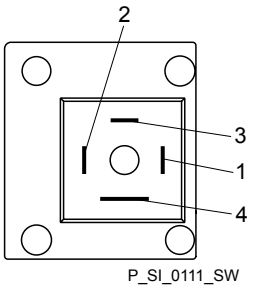

Fig. 20: Pump assignment

If another switching function is required, the pump can be reprogrammed in the *„Relay“* menu.

The relay can be retrofitted and operates once it is plugged into the relay board.

Fault indicating relay 230 V

Data	Value	Unit
Maximum contact load at 230 V and 50/60 Hz:	8	A (resistive)
Minimum mechanical lifespan:	200,000	switching operations

Fault indicating relay 230 V

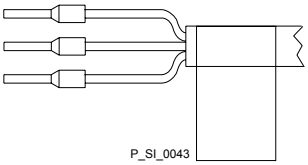

Fig. 21: Cable assignment

Pin assignment

To pin	VDE cable	Contact	CSA cable
1	white	NO (normally open)	white
2	green	NC (normally closed)	red
4	brown	C (common)	black

7.2.1.1.2 Fault indicating and pacing relay option

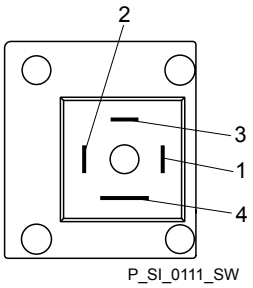

Fig. 22: Pump assignment

The first switch is a relay. The pacing output is electrically-isolated by means of an optocoupler with a semiconductor switch.

If another switching function is required, the pump can be reprogrammed in the *„Relay“* menu.

The relay can be retrofitted and operates once it is plugged into the relay board.

Fault indicating relay (24 V)

Data	Value	Unit
Maximum contact load at 24 V and 50/60 Hz:	100	mA
Minimum mechanical lifespan:	200,000	switching operations

Pacing relay

Data	Value	Unit
Residual voltage max. at $I_{off\ max}$ = 1 µA	0.4	V
Maximum current	100	mA

Data	Value	Unit
Maximum voltage	24	VDC
Closing duration	100	ms

Fault indicating and pacing relay option

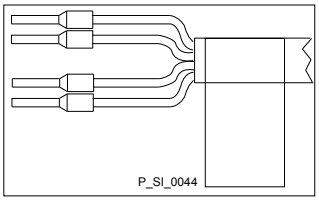

Fig. 23: Cable assignment

Pin assignment

To pin	VDE cable	Contact	Relay
1	yellow	NC (normally closed) or NO (normally open)	Fault indicating relay
4	green	C (common)	Fault indicating relay
3	white	NC (normally closed) or NO (normally open)	Pacing relay
2	brown	C (common)	Pacing relay

7.2.1.1.3 Current output and fault indicating / pacing relay (24 V)

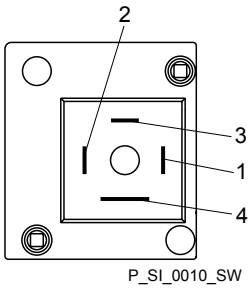

Fig. 24: Pump assignment

The module can be retrofitted and operates once it is plugged into the module board.

In the *„ANALOG OUTPUT“* menu, the variable to be signalled by the current output can be selected.

If another switching function is required, the relay can be reprogrammed in the *„Relay“* menu.

Current output

Data	Value	Unit
Open circuit voltage:	8	V
Current range:	4 ... 20	mA
Ripple, max.:	80	µA pp
Ripple, max.:	250	Ω

Fault indicating / pacing relay (24 V)

Data	Value	Unit
Residual voltage max. at $I_{off\ max}$ = 1 µA	0.4	V
Maximum current	100	mA
Maximum voltage	24	VDC
Closing duration	100	ms

Current output and fault indicating / pacing relay (24 V)

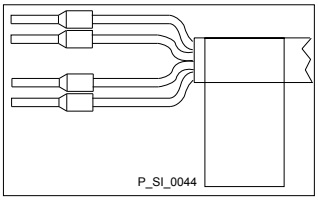

Fig. 25: Cable assignment

To pin	VDE cable	Contact	Relay
1	yellow	"+"	Current output
4	green	"-"	Current output
3	white	NC (normally closed) or NO (normally open)	Fault indicating / pacing relay
2	brown	C (common)	Fault indicating / pacing relay

7.2.1.2 External control

External control

Universal control wire connection diagram

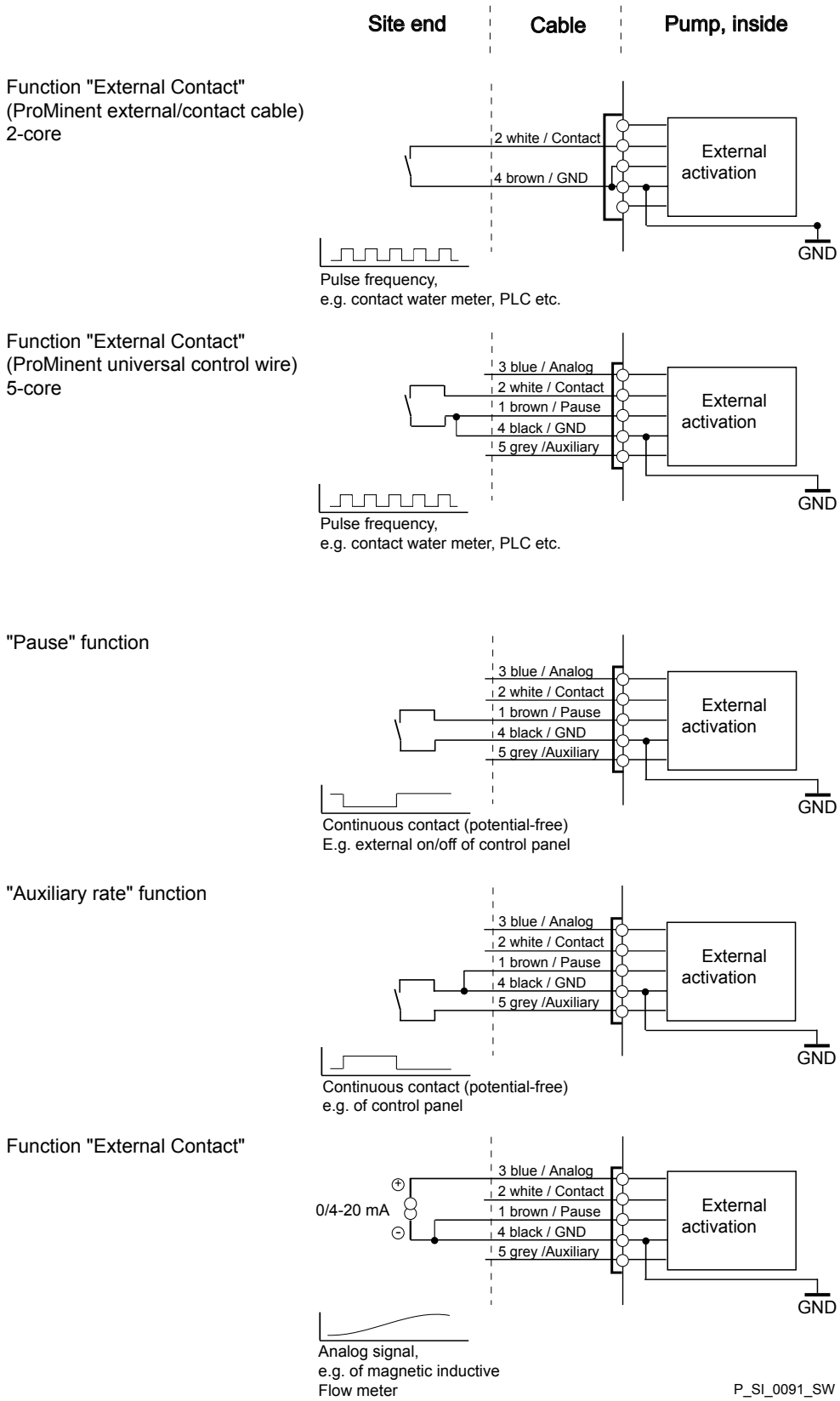

Technical data "external control"

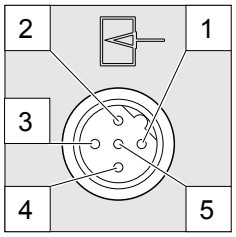

P_BE_0014_SW

Semi-conductor switch elements with a residual voltage of -0.7 V (e.g. transistors in open-collector circuits) or contacts (relays) can be used as input switch elements.

Pin		
Pin 1 = Pause input (activating function)	Voltage with open contacts:	approx. 5 V
	Input resistance:	10 kΩ
	Control:	■ Potential-free contact (approx. 0.5 mA) ■ Semiconductor switch (residual voltage < 0.7 V)
2 = contact input	Voltage with open contacts:	approx. 5 V
	Input resistance:	10 kΩ
	Control:	■ Potential-free contact (approx. 0.5 mA) ■ Semiconductor switch (residual voltage < 0.7 V)
	min. contact duration:	20 ms
	Max. pulse frequency:	25 pulses/s
3 =Analog input	Input apparent ohmic resistance	approx. 120 Ω
4 = GND		
5 = auxiliary input	Voltage with open contacts:	approx. 5 V
	Input resistance:	10 kΩ
	Control:	■ Potential-free contact (approx. 0.5 mA) ■ Semiconductor switch (residual voltage < 0.7 V)

The metering pump makes its first metering stroke at approx. 0.4 mA (4.4 mA) and enters into continuous operation at approx. 19.2 mA.

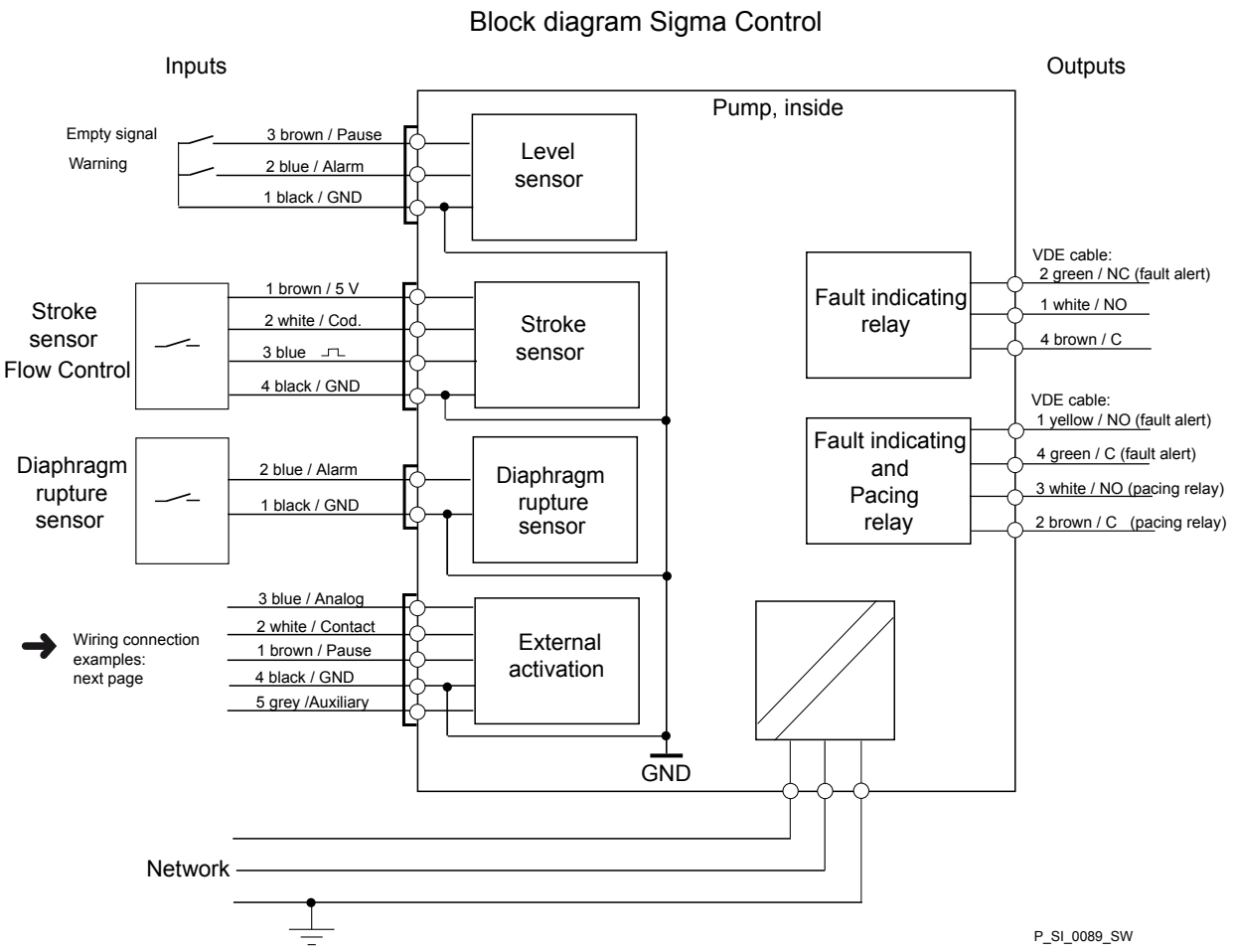

Fig. 26: Block diagram Sigma Control

Universal control wire connection diagram

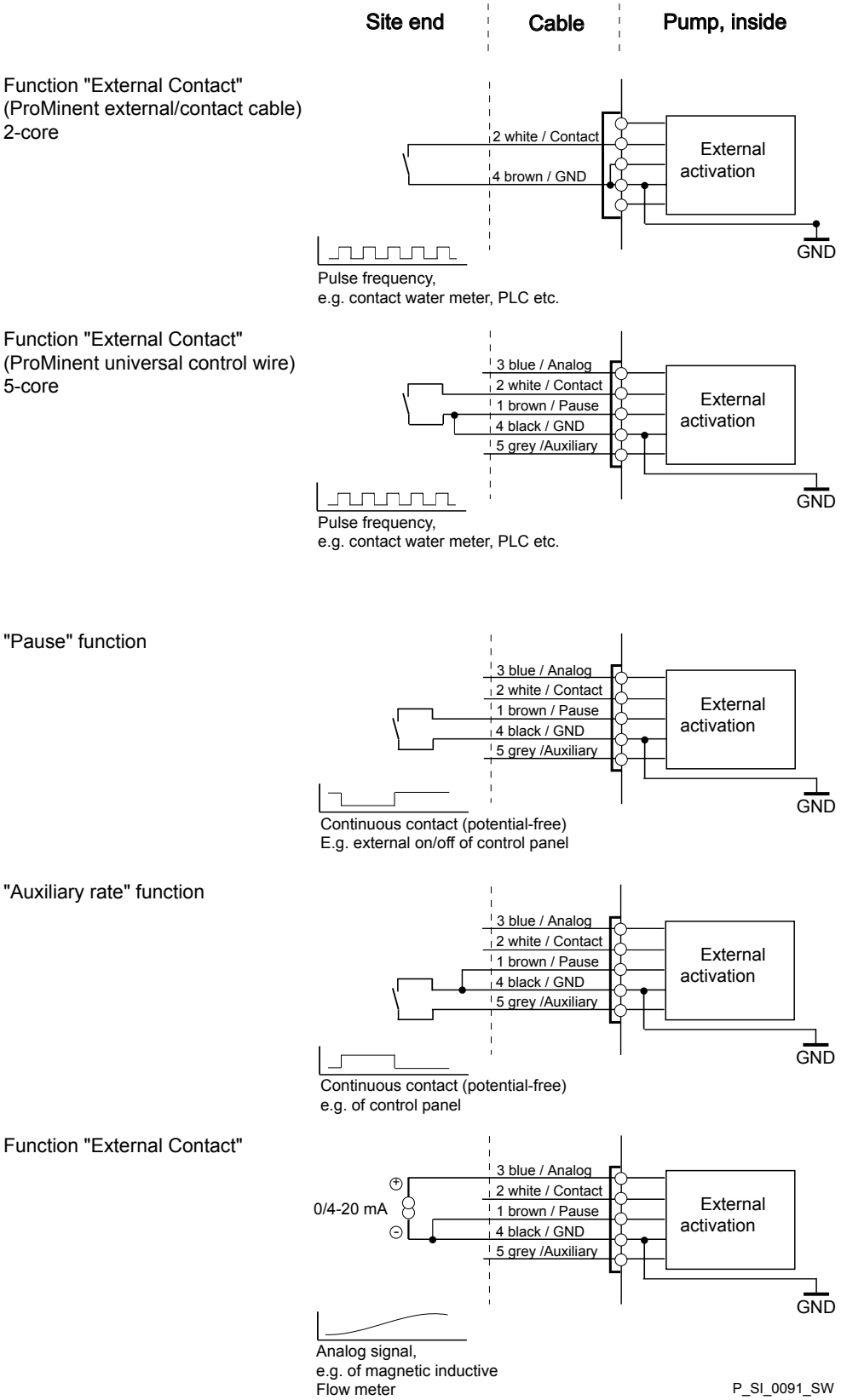

7.2.2 HMI operating unit

If the pump is operated via the HMI, the HMI must be connected to the CAN port above the LEDs of the pump base.

If the pump is operated without the HMI, the supplied sealing cap must be plugged into the CAN port above the LEDs of the pump base.



CAUTION!

Risk of short circuit

If liquid penetrates into the CAN port, a short circuit may occur in the pump.

– A CAN plug or the supplied sealing cap must always be plugged into the CAN port.



CAUTION!

Danger of malfunctions

Incorrect operation via the CAN bus leads to malfunctions.

– When operating with the HMI connected, do not connect any other control (e.g. DXCa) to the CAN port.

7.2.3 Pump, power supply



WARNING!

Risk of electric shock

This pump is supplied with a grounding conductor and a grounding-type attachment plug.

– To reduce the risk of electric shock, ensure that it is connected only to a proper grounding-type receptacle.



WARNING!

Danger of electric shock

In the event of an electrical accident, it must be possible to quickly disconnect the pump, and any electrical ancillaries which may possibly be present, from the mains.

– Install an emergency cut-off switch in the mains supply line to the pump and any electrical ancillaries which may be present or
– Integrate the pump and electrical ancillaries which may be present in the emergency cut-off management of the system and inform personnel of the isolating option.



WARNING!

If the HMI cannot be operated directly from the pump (specifically with versions with a cable longer than 2 m), provide an option to disconnect the pump from the mains power supply in the event of an emergency. Clearly assign and label this option to the pump.



WARNING!

An on/off switch may not be fitted on the pump, dependent on the identity code and installation.

CAUTION!

Pump can be damaged

The pump can only be stopped when running via an:

– External cable
– *[Stop]* key.

Use a relay or a contactor if the pump has to be definitively actuated via the mains cable. However, take into account the pump's starting current.

To be able to switch off the pump (to a zero-volts state) independently from the entire installation (e.g. for repair), use an electrical isolating device in the mains supply cable, e.g. a mains switch or a plug / socket combination. Clearly identify this isolating device as such.

Install the pump cable. Use the original cable supplied!

– *Key electrical data can be found on the pump nameplate.*

7.2.4 Other units

Other units

Install the other units according to their supplied documentation.

8 Setting



- *Please read the overviews in the appendix, "Control elements and key functions" and "Operating/setting diagram" for supplementary information.*
- *If no key is pressed for a 1 minute duration, the pump returns to a continuous display.*

8.1 Basic Principles for Setting up the Control

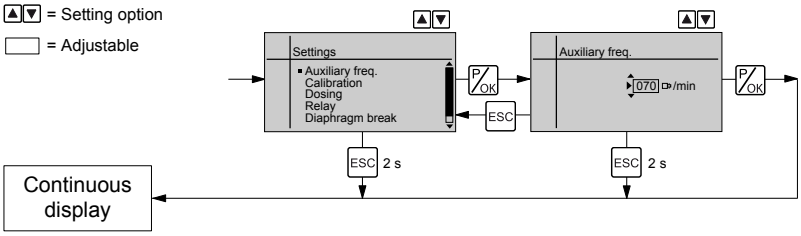

Confirming an entry

Briefly press the *[P/OK]* key.

The display simultaneously changes to the next selection, to the next menu option or into a continuous display.

Quitting a menu option without confirming it

Press *[ESC]*.

You will jump back to the previous menu option or menu.

Jumping back to a continuous display

Press and hold the *[ESC]* key for 2 seconds.

Changing adjustable variables

Press the arrow keys *[UP]* or *[DOWN]*.

In this way the digit between the triangles is increased or reduced.

Select the digit position in a number using the key *[i/>]*.

Confirming adjustable variables

Press the *[P/OK]* key.

The display simultaneously changes to the next selection, to the next menu option or into a continuous display.

8.2 Checking adjustable values / error messages

Continuous displays

Before you adjust the pump, you can check the actual settings of the adjustable variables:

1. Press the key *[i/>]* ("i" for "Info"), if the pump is displaying a continuous display (An "i" is visible at the top left).

   ⇨ Each press of the *[i/>]* key displays another continuous display or a plain text error message.

2. The continuous display values can be changed using the *[arrow keys]*.

The number of continuous displays depends on the identity code, the selected operating mode and the connected additional devices, see overview "Continuous displays" in the appendix.

A horizontal scroll bar shows the number of continuous displays and error messages and the position of the displayed continuous display or error message.

With error messages an identifier appears while displays with clear text appear between the continuous displays (and an error code).

Secondary displays

The lowest line in the information displays (2nd level continuous display) shows different information, which cannot however be adjusted here, see overview "Secondary displays" in the appendix.

If you are in a continuous display, you can access the bottom line of the info displays by:

1. Keep key *[i/>]* pressed down until a small triangle appears in the bottom line.
2. Now quickly press the *[i/>]* key to page through the info displays of the bottom line.

8.3 Changing to set up mode

If the *[P/OK]* key is pressed for 2 seconds in a continuous display, the pump changes to adjustment mode.

If under *„Service ➔ Safety ➔ Access protection“ „Lock menu“* or *„Lock all“* was set (top left key symbol instead of "i"), proceed as follows:

1. Press the *[P/OK]* key.
   ⇨ The *„Password“* display appears.
2. Enter the password (*[Arrow keys]*) and confirm with the *[P/OK]* key.
   ⇨ The *„Password valid“* display appears.
3. Confirm the display with the *[P/OK]* key.
   ⇨ The *„Main menu“* appears.

The following menus can be initially chosen in adjustment mode - see also the overview "Operating/setting diagram":

- Menu *„Mode“*
- Menu *„Settings“*
- Menu *„Service“*
- Menu *„Information“*
- Menu *„Language“*

To adapt the pump to your process requirements, you must:

1. Select the operating mode in the *„Mode“* menu.
2. Carry out the adjustment for this operating mode under the *„Settings“* menu.

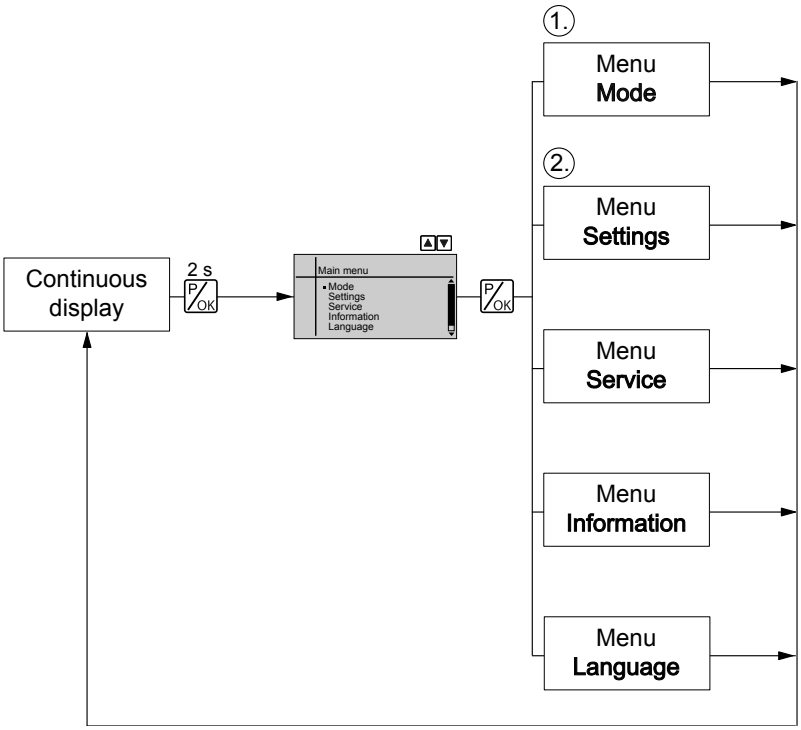

8.4 Selecting the operating mode (Menu "Mode")

In the *„Mode“* menu (depending on the identity code, some operating modes may not be present) the following operating modes can be selected:

- *„Manual“*: for manual operation
- *„Batch“*: for batch operation
- *„Contact“*: for contact operation
- *„Analog“*: for current control

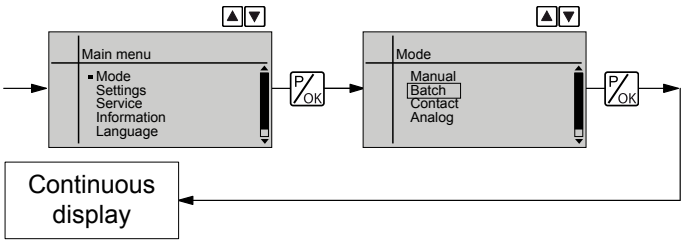

8.5 Operating mode settings (menu "Settings")

Various settings can be adjusted in the *„Settings“* menu dependent on the selected operating mode.

Setting menus are available in all operating modes for the following programmable functions:

- *„Auxiliary frequency“*
- *„Calibration“*
- *„Metering“*
- *„Diaphragm rupture“*
- *„System“*

See also "Programmable function settings".

As to whether or not a further setting menu is available, depends on the selected operating mode and the connected devices or modules.

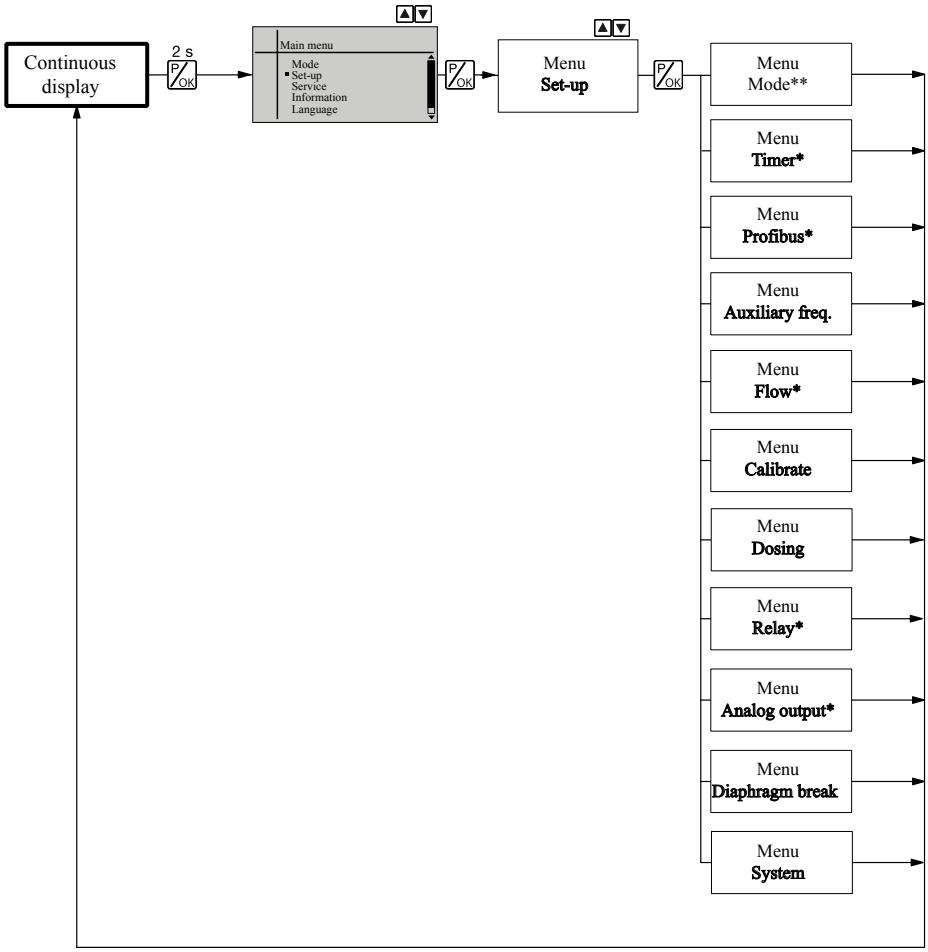

Fig. 27: "Settings" menu branch

8.5.1 "Manual" operating mode settings

No setting menu is available in *„Manual“* operating mode in the menu *„Settings“*.

8.5.2 "Batch" mode settings

The *„BATCH“* menu is available under *„Batch“* mode in the *„Settings“* menu.

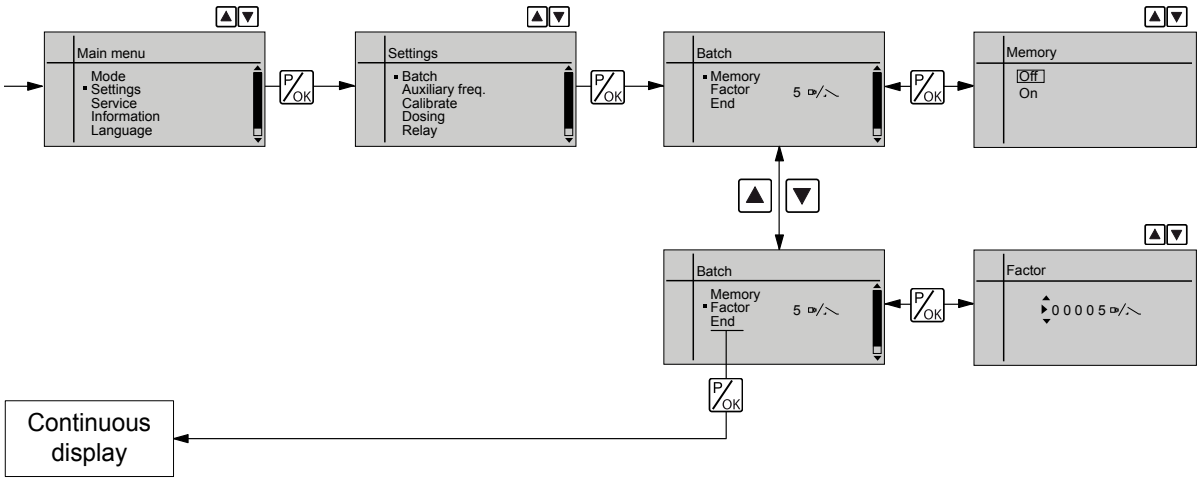

The operating mode *„Batch“* is one variant of the *„Contact“* operating mode - see the following chapter. Here also, you can select a number of strokes (no fractions, only integers from 1 to 99,999).

Operating mode *„Batch“* is intended for large metering quantities.

Metering can be triggered by pressing the *[P/OK]* key or via a pulse received via the "External Control" terminal.

The number of received pulses, which could not yet be processed, is stored by the pump in the stroke memory, if it was activated.

CAUTION!
When changing over from the "Manual" operating mode to the "Batch" operating mode, the pump maintains the stroke rate.

The stroke rate can also be set in „Batch“ mode. It should normally be set to the maximum stroke rate.

"Memory" function extension

Additionally, the "Memory" function extension is enabled by default (Identifier "m"). When "Memory" is activated, the pump adds up the remaining strokes , which could not be processed, up to the maximum capacity of the stroke memory of 99,999 strokes. If this maximum capacity is exceeded, the pump goes into fault mode.

8.5.3 "Contact" operating mode settings

The *„Contact“* menu is available under *„Contact“* mode in the *„Settings“* menu.

„Contact“ operating mode allows you to trigger individual strokes or a stroke series.

You can trigger the strokes via a pulse sent via the "External control" terminal.

The purpose of this operating mode is to convert the incoming pulses into strokes with a step-down (fractions) or small step-up.

CAUTION!
The pump maintains the stroke rate when changing over from *„Manual“* operating mode to *„Contact“* operating mode.

The stroke rate can also be set in „Contact“ operating mode. It should normally be set to the maximum stroke rate.

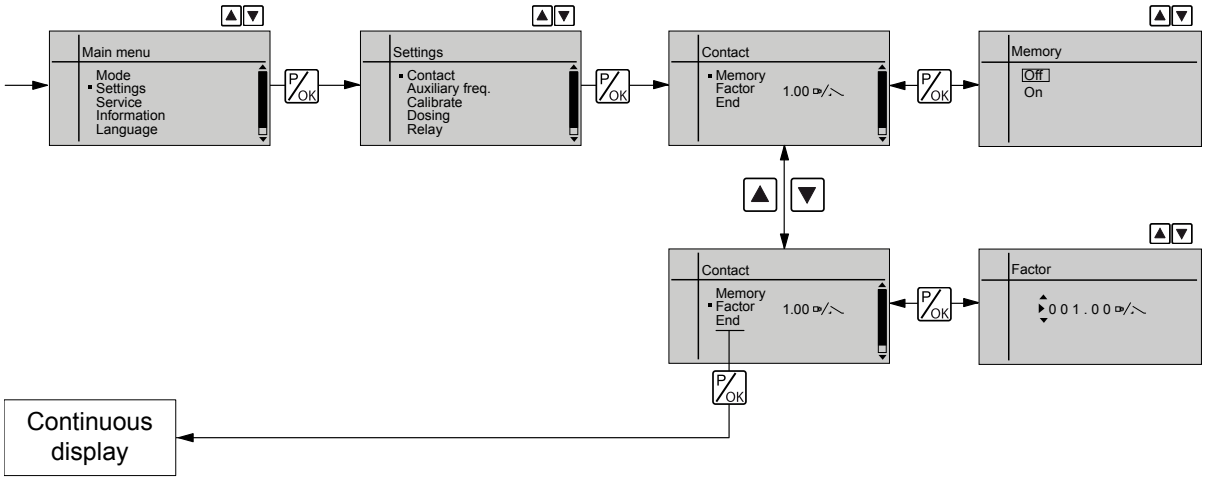

The number of strokes per pulse depends on the factor which you can input. By using a factor you can multiply incoming pulses by a factor between 1.01 and 100.00 or reduce them by a factor of 0.01 to 1.00:

```
Number of strokes executed = factor x number of
incoming pulses
```

Table of examples

	Factor	Pulse (sequence)	Number of strokes (sequence)
Step-up*			
	1	1	1
	2	1	2
	25	1	25
	100.00	1	100.00
	1.50	1	1.50 (1 / 2)
	1.25	1	1.25 (1 / 1 / 1 / 2)
Step-down**			
	1	1	1
	0.50	2	1
	0.10	10	1
	0.01	100	1
	0.25	4	1
	0.40	2.5 (3 / 2)	(1 / 1)
	0.75	1.33 (2 / 1 / 1)	(1 / 1 / 1)

*** Explanation of the conversion ratio**

With a factor of 1	... 1 stroke is executed per 1 pulse.
With a factor of 2	... 2 strokes are executed per 1 pulse
With a factor of 25	... 25 strokes are executed per 1 pulse

**** Explanation of step-down**

With a factor of 1	... 1 stroke is executed per 1 pulse.
With a factor of 0.5	...1 stroke is executed after 2 pulses.
With a factor of 0.1	...1 stroke is executed after 10 pulses.
With a factor of 0.75	...1 stroke is executed once after 2 pulses, then 1 stroke is executed twice after 1 pulse, and then again 1 stroke after 2 pulses etc.

If a remainder is obtained when dividing by the factor, then the unit adds the remainders together. As soon as this sum reaches or exceeds "1", the pump executes an additional stroke. Therefore on average during the metering operation, the resultant number of strokes precisely matches the factor.

Non-processed pulses

The number of received pulses, which could not yet be processed, is stored by the device in the stroke memory, if it was activated. When the *[STOP/START]* key is pressed or the "Pause" function is activated, the stroke memory is deleted. You can avoid this with the "Memory" function extension:

Non-processed pulses

The device stores the number of pulses received, which could not yet be processed, in the stroke memory (if it was enabled).

When *[STOP/START]* is pressed or the "Pause" function is enabled, the stroke memory is deleted.

You can avoid this with the "Memory" function extension:

"Memory" function extension

Additionally, you can activate the "Memory" function extension (Identifier "m"). When "Memory" is enabled, the pump adds up the remaining strokes , which could not be processed, up to the maximum capacity of the stroke memory of 99,999 strokes.

If this maximum capacity is exceeded, the pump goes into fault mode.

"Memory" function extension

Additionally, the "Memory" function extension is enabled by default (Identifier "m"). When "Memory" is activated, the pump adds up the remaining strokes , which could not be processed, up to the maximum capacity of the stroke memory of 99,999 strokes. If this maximum capacity is exceeded, the pump goes into fault mode.

8.5.4 "Analog" operating mode settings

The *„ANALOG“* menu is available under *„Analog“* mode in the *„Settings“* menu. The stroke rate is controlled using an analog current signal via the "External control" terminal. The secondary display "Signal current" indicates the incoming current.

You can select three types of current signal processing:

- *„Standard“* (*„0 - 20 mA“* or *„4 - 20 mA“*)
- *„Extended“* (*„Curve type“*)

Standard

0 - 20 mA

At 0 mA the pump is stationary –

At 20 mA the pump works at maximum stroke rate.

Between these values, the stroke rate is proportional to the current signal.

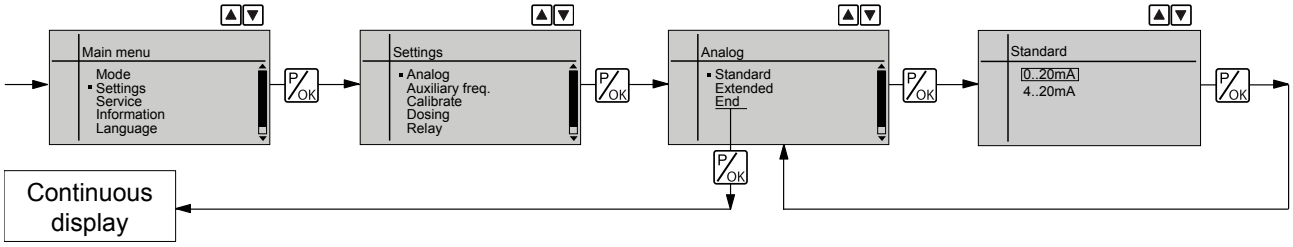

4 - 20 mA

At 4 mA the pump is stationary –

At 20 mA the pump works at maximum stroke rate.

Between these values, the stroke rate is proportional to the current signal.

With current signals of less than 3.8 mA, an error message appears and the pump stops (e.g. if a cable has broken).

The maximum stroke rate can only be reduced under „Extended“ processing types, not under „Standard“ processing types.

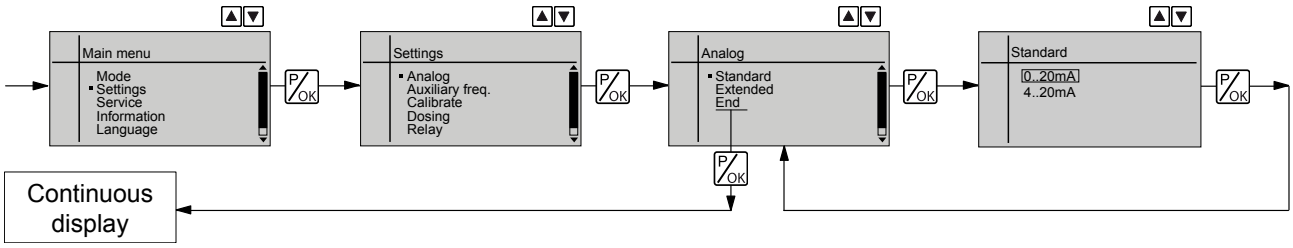

Extended

Under *„Extended“* - *„Curve type“* processing types, you can freely program the pump behaviour.

There are 3 curve types:

- *„linear“*
- *„Lower sideband“* (lower sideband)
- *„Upper sideband“* (upper sideband)

The following applies to all three curve types:

The smallest processable difference between I1 and I2 is 4 mA (ll I1-I2 ll ≥4 mA).

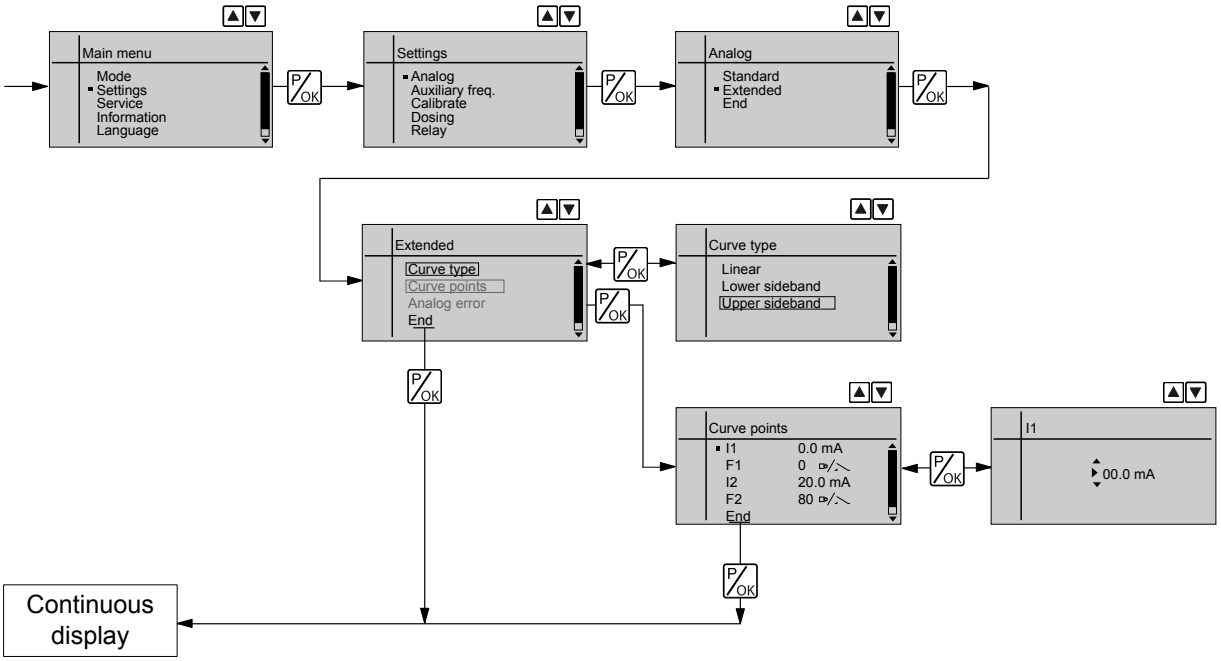

„Linear“

The symbol *„Linear“* appears on the LCD screen. You can enter any pump stroke rate behaviour proportional to the current signal. For this purpose, enter any two points P1 (I1, F1) and P2 (I2, F2) (F1 is the stroke rate at which the pump is to operate at current I1, F2 is the stroke rate at which the pump is to operate at current I2...); this defines a straight line and thus the behaviour is specified:

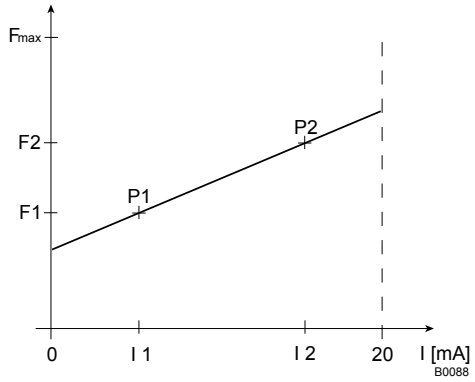

Fig. 28: Rate(frequency)-Current Diagram for Linear control

Plot a diagram similar to the one above – with values for (I1, F1) and (I2, F2) – so that you can set the pump as desired!

„Lower side band“

Using this type of processing, you can control a metering pump using the current signal as shown in the diagram below.

However, you can also control two metering pumps for different feed chemicals via a current signal (e.g. one acid pump and one alkali pump using the signal of a pH sensor). To do this, connect the pumps electrically in series.

The "Lower sideband" symbol appears in the LCD display. Below I1, the pump works at a rate of F1 - above I2 it stops. Between I1 and I2 the stroke rate varies between F1 and F2 in proportion to the signal current.

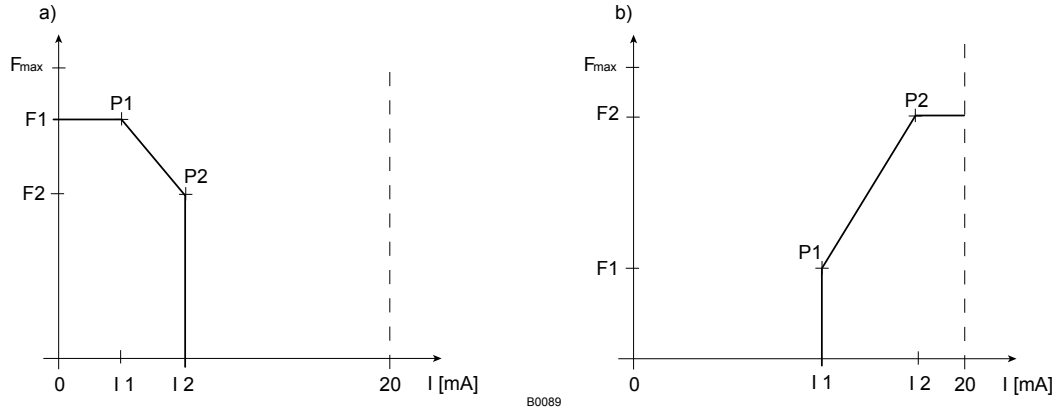

Fig. 29: Frequency-current diagram for a) Lower side band, b) Upper side band

„Upper side band“

Using this processing type, you can control a metering pump using the current signal as shown in the diagram above.

However, you can also control two metering pumps for different feed chemicals via a current signal (e.g. one acid pump and one alkali pump using the signal of a pH sensor). To do this, connect the pumps electrically in series.

The "Upper sideband" symbol appears in the LCD display. Below I1, the pump is stationary - above I2 the pump works at rate F2. Between I1 and I2 the stroke rate varies between F1 and F2 in proportion to the signal current.

Error processing

Under menu option *„Analog error“* you can activate error processing for processing type *„Curve“*. For current signals below 3.8 mA, an error message appears and the pump stops.

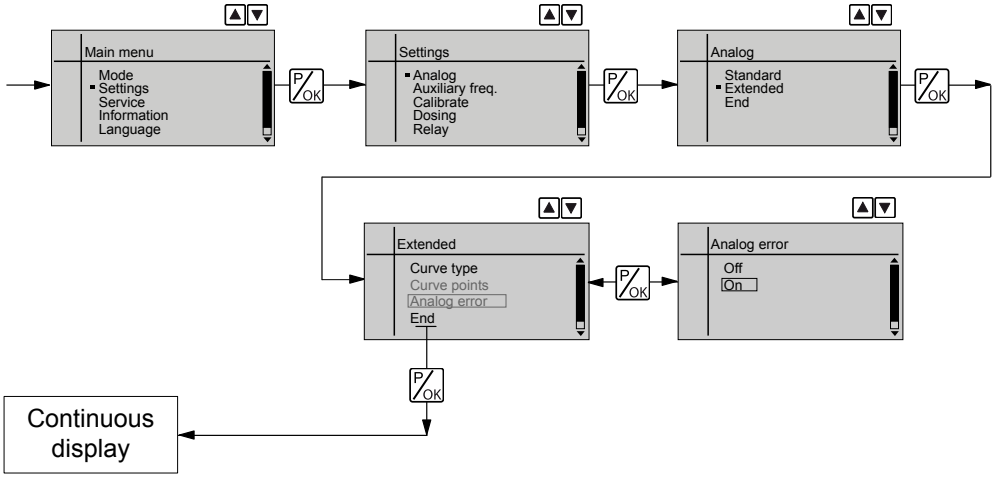

8.6 Programmable function settings ("Settings" menu)

Setting menus are available in all operating modes in the menu "SETTINGS" for the following programmable functions:

- Auxiliary frequency (menu *„AUX“*)
- Flow (menu *„FLOW“*) (only available if a dosing monitor is connected)
- Calibration (*„CALIBRATION“* menu)
- Metering (menu *„METERING“*)
- Metering monitor (*„METERING MONITOR“* menu) (only available if a metering monitor is connected)
- Relay (menu *„RELAY“*) (only available if a relay is fitted)
- Analogue output (*„ANALOGUE OUTPUT“* menu) (only available if an analogue output is connected)
- Diaphragm rupture (*„DIAPHRAGM RUPTURE“* menu) (only available if a diaphragm rupture indicator is connected)
- System (menu *„SYSTEM“*)

8.6.1 “Auxiliary frequency” function settings (AUX menu)

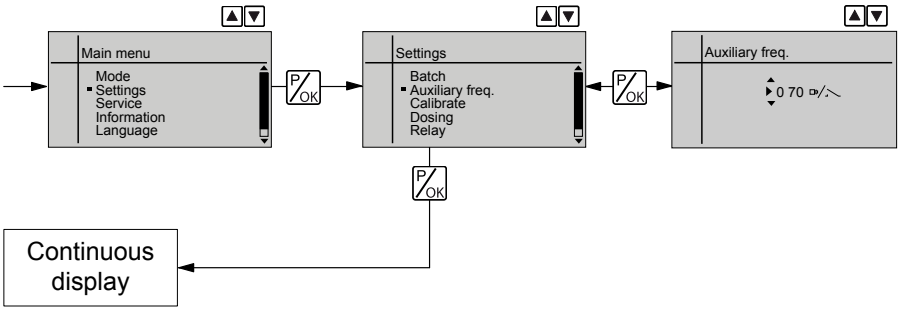

The programmable function *„Auxiliary frequency“* facilitates the switchover to an auxiliary stroke rate, which can be set in the *„Auxiliary freq.“* menu. It can be activated via the "External control" terminal. If the auxiliary frequency is used, then the identifier “Aux” appears on the LCD screen.

This *„auxiliary frequency“* has priority over the stroke rate, which is specified by the currently selected operating mode - see also the chapter "Function description" - "Hierarchy of operating modes".

8.6.2 Settings for the “Calibration” function (CALIBRATION menu)

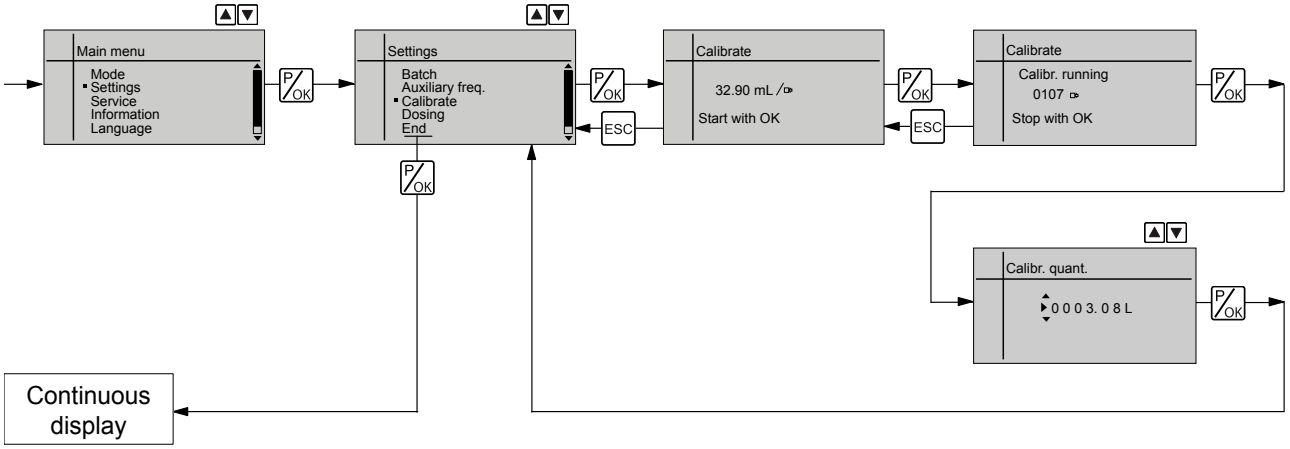

The pump can also be operated in the calibrated state. In this case, the corresponding continuous displays then indicate the metering volume or the capacity directly.

Accuracy of the calibration

Calibration will not be accurate if these conditions are not adhered to:

- *Operate with at least 30% stroke length.*
- *The pump should operate at maximum frequency.*

Calibration

WARNING!

If the feed chemical is dangerous, take appropriate safety precautions when performing the following calibration instructions.

Observe the safety data sheet for the feed chemical!

1. Lead the suction hose into a measuring cylinder containing the feed chemical – make sure that the discharge hose is installed in a permanent manner (operating pressure, ...!).
2. Prime using the feed chemical (simultaneously press the two *[arrow keys]*), should the suction hose be empty.
3. Record the level in the measuring cylinder.
4. To set the volume unit, follow the menu path *„Settings ➔ System ➔ Units“*.
5. Using the *[arrow keys]*, select the correct units and confirm by pressing the *[P/OK]* key.
6. Select the *„CALIBRATE“* menu and then use the *[P/OK]* key to change to the first menu option.
7. To start the calibration, press the *[P/OK]* key. The next menu option, *„Calib. running“* appears, the pump starts to pump and indicates the stroke rate (the pump works at the stroke rate, which is set under *„MANUAL“*).
8. After a reasonable number of strokes (e.g. 200), stop the pump by pressing the *[P/OK]* key.
9. Determine the required metering volume (difference between initial volume - remaining volume).
10. Enter this volume in the menu option which appears and then press the key *[P/OK]* - the pump changes to the main menu.

11. Select the option *„End“* and then press the key *[P/OK]* - the pump changes to a continuous display.

⇨ The pump is calibrated.

The corresponding continuous displays indicate the calibrated values.

8.6.3 Settings for the “Metering” function (DOSING menu)

The "Dosing" menu has the following sub-menu:

1 - *„Dosing profile“*

8.6.3.1 Settings in the sub-menu ″Dosing″

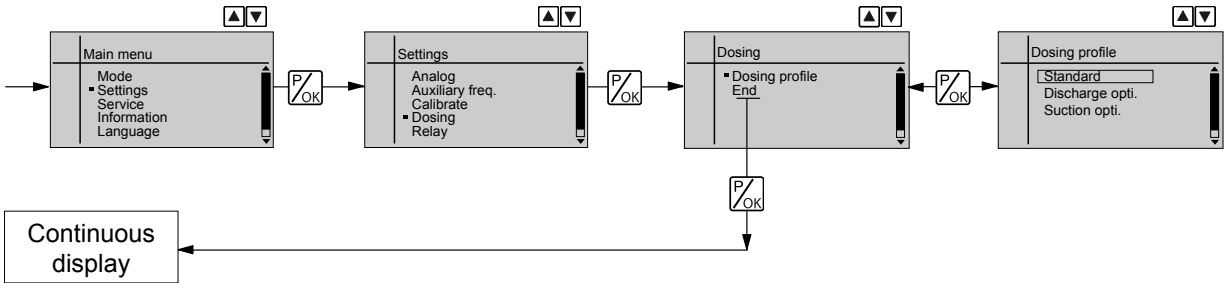

Under *„Dosing ➔ Dosing profile“* you can precisely match the pump metering flow over time against the requirements of the particular application, see Chapter "Function Description".

Discharge opti.

Under *„Dosing profile“* - *„Discharge opti.“*, the discharge stroke is elongated, the suction stroke is executed as quickly as possible. This setting is suitable for example for those applications that require optimum mixing ratios and as continuous as possible chemical mixing.

Suction opti.

Under *„Dosing profile“* - *„Suction opti.“*, the suction stroke is elongated as much as possible, which makes possible a precise and problem-free dosing of viscous and gaseous media. Select this setting to minimise the NPSH value as well.

8.6.3.2 Settings in the “Pressure stage” sub-menu

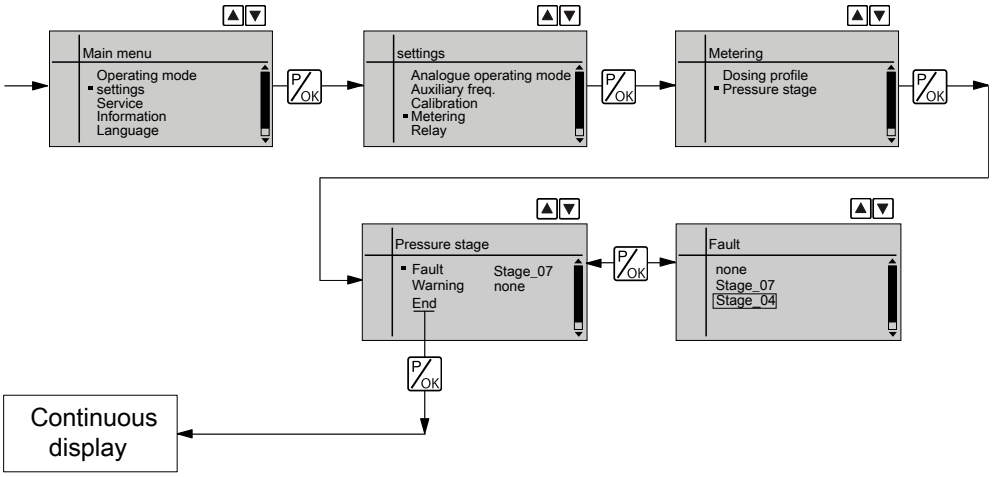

Pressure stage

Under *„Metering ➔ Pressure stage“* you can reduce the nominal pressure of the pump via the pressure stages – refer to the "Functional Description” chapter.

Nominal pressures depending on the size of the liquid ends and the pressure stages

Pressure stage /	4	7	10	16
Size of liquid end				
16050 *	X	X	X	X
16090 *	X	X	X	X
16130 *	X	X	X	X
07120	X	X	-	-
07220	X	X	-	-
04350	X	-	-	-

* the pressure of the plastic liquid ends is reduced to 10 bar.

Overload switch-off

The switch-off pressure of the active overload switch-off falls at the same time as the pressure stage - refer to the “Functional Description” chapter.

The overload switch-off is to protect the pump, not the system. It does not replace a relief valve.

In the event of an overload, the pump signals an error via the LED displays, the LCD screen and - if fitted – the fault indicating relay.

There are two types of overload shut-down:

- • The pump immediately stops with a sudden rise in pressure (e.g. shut-off valve closed). It displays the error E-60 (line block) and E-59 (p+).
- • The pump stops with a delay with a slow rise in pressure (e.g. crystals in lines cause them to slowly close up). It displays the error E-59 (p+).
  You can also select *„Error“* and *„Warning“* as a reaction in the menu: then the pump issues a warning but continues to run.



You can disable the overload switch-off by selecting „no“ pressure stages.

Like other critical settings, this setting is also recorded in the internal error memory.

8.6.4 Settings for the “Dosing monitor” function (DOSING MONITOR menu)

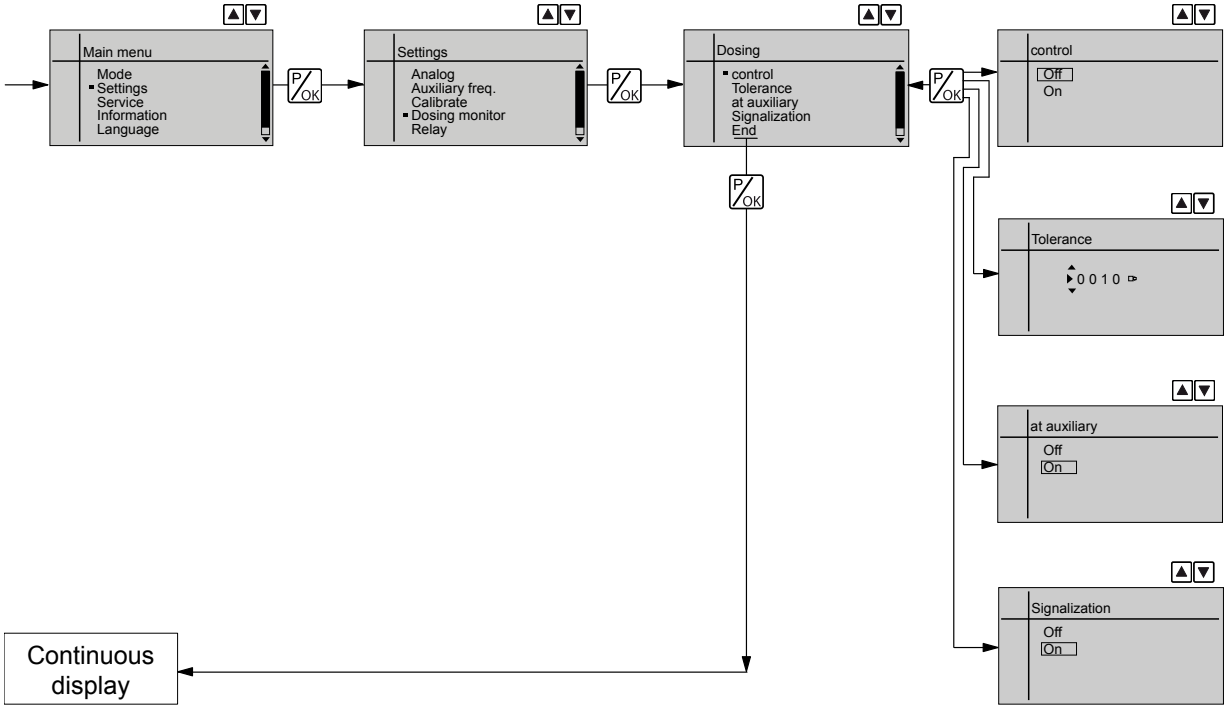

The menu *„Dosing monitor“* only appears if a dosing monitor is connected to the "dosing monitor" terminal. The dosing monitor records the individual pressure surges of the pump at the pressure connector during pulsed metering and reports them back to the pump. In the event that this feed-back message remains missing in a sequence as often as set in the menu *„Dosing monitor“* under *„Tolerance“* (due to a failure or too low a metering level), then this function stops the pump.

The last menu option *„Signalization“* provides the choice, of whether this case should lead to an *„Error“* or a *„Warning“*.

The function *„Dosing monitor“* can be deactivated under *„Control“*.

For *„Auxiliaryfreq.“* (auxiliary frequency) operating mode, the function *„Metering monitor“* can be disabled.

If the “Flow Control” metering monitor is not running cleanly due to the flow being too low and pressure surges by the feed chemical, we would advise checking the use of our ultrasound flow meter Dulco Flow® DFMa 08.

8.6.5 Settings for the “Relay” function (RELAY menu)

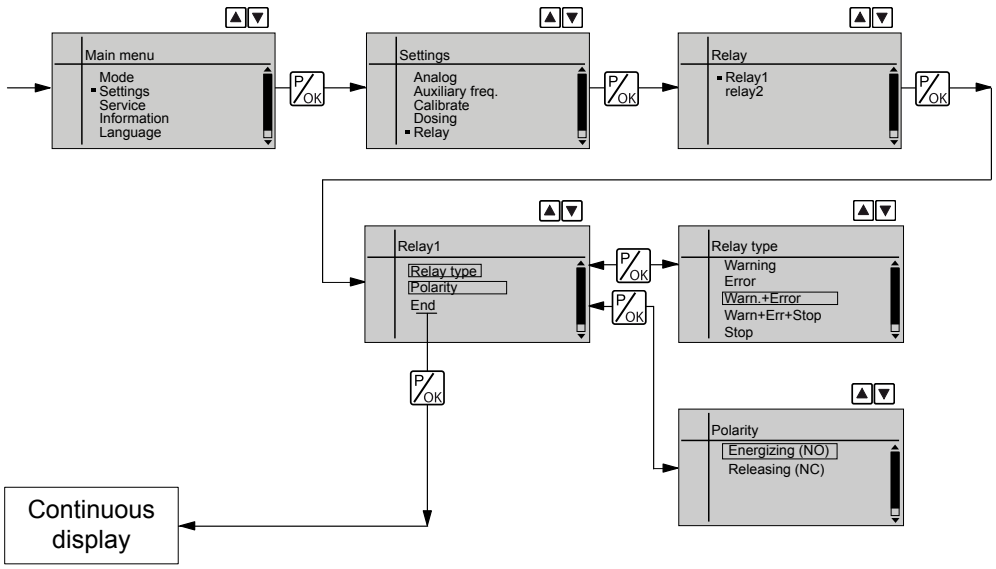

Using the *„Relay“* programmable function, you can match the pump relays to your requirements.

You can reprogram the relays using the *„Relay“* function in an almost unlimited way.

You can set whether the respective relay is to switch due to a warning alert, a fault alert, a pump stroke or a triggering event of the PROFIBUS:

Selectable behaviour types

Setting in the *„Relay“* menu	Warning message	Fault alert	Manual stop	Pause	Stop via bus	Stroke	Optional signal*
Warning	X						
Fault		X					
Warning+Error	X	X					
Warn+Err+Stop	X	X	X	X	X		
Stop		X	X	X	X		
Pacing relay*						X	
Pump inactive		X	X				
Option**							X

* is only available as a semiconductor with the fault indicating/pacing relay

** The relay has the option of which module was plugged in (e.g. PROFIBUS).

You can also indicate how the respective relay should behave as soon as it switches. They affect the setting *„RELEASING (NC)“* / *„ENERGIZING (NO).“*

The setting option for the „Relay“ function only exists if a relay is present.

8.6.6 Settings for the “Analog output” function (ANALOG OUTPUT menu)

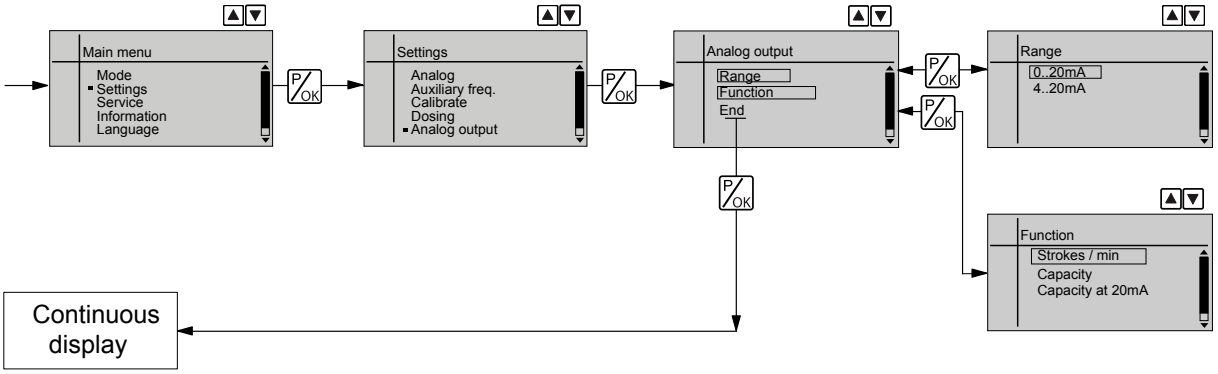

Using the "Analog output" programmable function, you can match the pump current output signal (optional) to your requirements.

The signal I of the current output signal one of the three following variables:

- Strokes/min
- Capacity
- Capacity at 20 mA

In the "Stop" or "Pause" states (either because of a fault or operation) or "Pause" the current output transmits a current of 4 mA or 0 mA.

To *„Strokes / min“*

The pump calculates the signal for *„Strokes / min“* according to the following formula (here for the range 4...20 mA):

$I(4...20) = 16 \times (f/fmax) + 4$

with

I - Output current in mA

f - Stroke rate in strokes/min

fmax - Maximum stroke rate in strokes/min

In the *„Contact“* and *„Batch“* operating modes, f is the stroke rate which is set in the "Stroke rate" continuous display.

To *„Capacity“*

The pump calculates the signal for *„Capacity“* according to the following formula (here for the range 4...20 mA):

$I(4...20) = 16 \times (f/f_{max}) \times (H/100) + 4$

with

I - Output current in mA

f - Stroke rate in strokes/min

H - Stroke length in %

f_{max} - Maximum stroke rate in strokes/min

In the *„Contact“* and *„Batch“* operating modes, f is the stroke rate which is set in the "Stroke rate" continuous display.

To *„Capacity at 20 mA“*

This menu item is only available with a calibrated pump.

The pump calculates the signal for *„Capacity at 20 mA“* according to the following formula (here for the range 4...20 mA):

$I(4...20) = 16 \times (L/L_{max}) + 4$

with

l - Output current in mA

f - Stroke rate in strokes/min

L - Current litre output

L_{max} - *„ Capacity at 20 mA“*

f_{max} - Maximum stroke rate in strokes/min

The current output emits a current of 20 mA above the value set here for *„Capacity at 20 mA“* and above.

In the *„Contact“* and *„Batch“* operating modes, f is the stroke rate which is set in the "Stroke rate" continuous display.

8.6.7 Settings for the “Diaphragm break” function (DIAPHRAGM BREAK menu)

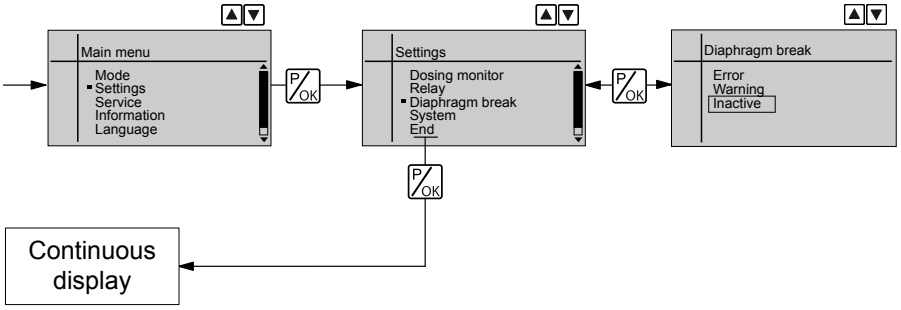

Using the "Diaphragm break" programmable function, you can match the behaviour under fault conditions of the pump to your requirements, provided an electrical membrane rupture sensor is connected.

There is a choice, of whether a membrane rupture should lead to an *„Error“* or a *„Warning“*. If *„Inactive“* is set, the pump does not react to a diaphragm rupture, however the symbol **dia** indicates that an electrical membrane rupture sensor is connected.

8.6.8 Settings in the "System" menu" (SYSTEM menu)

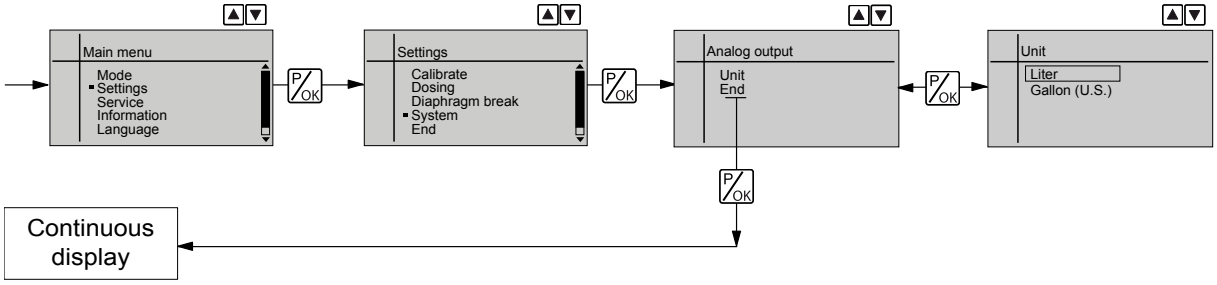

In the *„System“* menu you can select whether the pump uses *„Liter“* or *„Gallon (US)“* as the *„Unit“*.

8.7 Service (SERVICE menu)

The following can be carried out from this menu:

1 - *„Clear counter“*

2 - Set contrast (Menu *„Display“*)

3 - *„HMI logout“*

4 - Set safety settings for operating menu (*„Safety“* menu)

8.7.1 Clear counters (CLEAR COUNTERS menu)

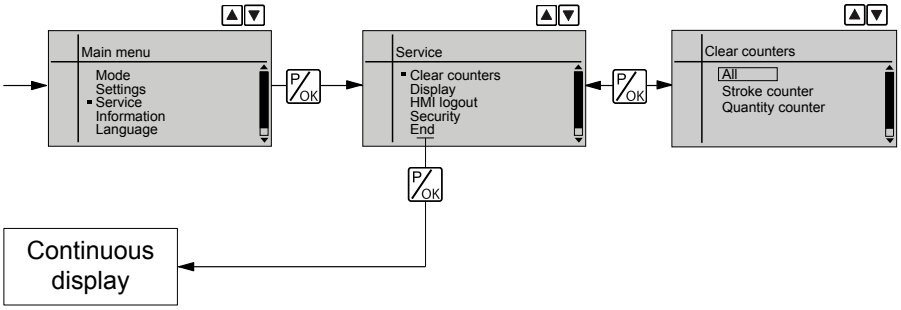

In the *„CLEAR COUNTERS“* menu, you can either delete the stored total number of strokes (*„Stroke counter“*) or the total litres (*„Quantity counter“*) (= reset to "0") or both together :

- *„All“*
- *„Stroke counter“* (total number of strokes)
- *„Volume counter“* (total litres)
- *„Memory“* (remaining strokes) (only with *„Batch“* and *„Contact“*)

To do this simply quit the menu by quickly pressing the key *[P/OK]* key.

The values have increased since commissioning of the pump, the last calibration or the last deletion.

8.7.2 Adjusting the Display (DISPLAY menu)

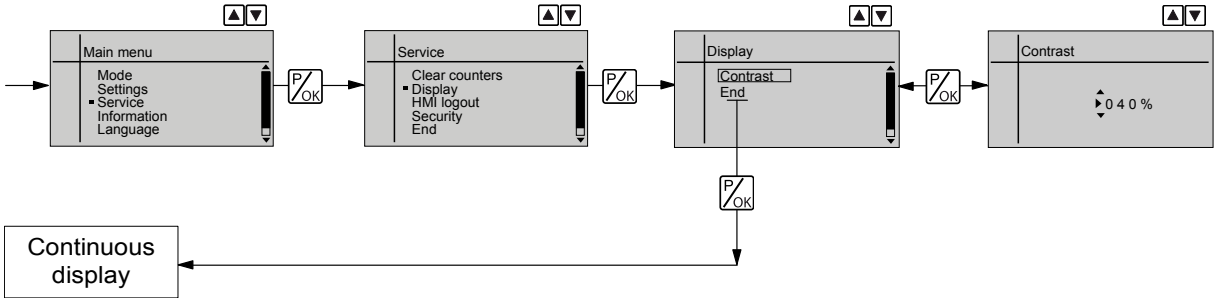

In the *„DISPLAY“* sub-menu the LCD screen contrast can be changed using the *[Arrow keys]*.

8.7.3 HMI logout

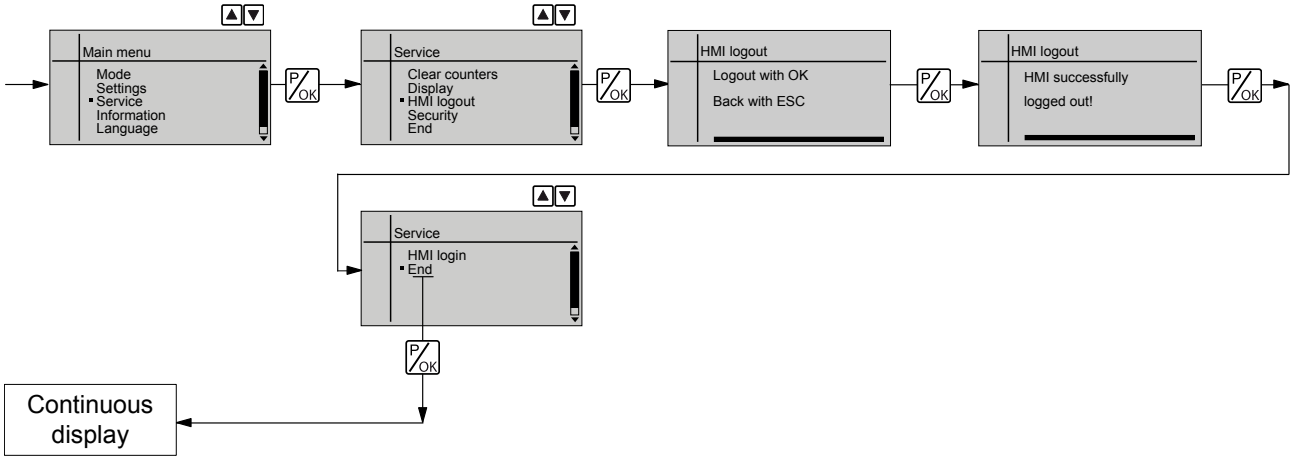

In this menu you can log into and out of the pump HMI:

To logout run through the menu above. Thereafter the HMI can be removed from the pump.

Logging on takes place automatically whenever the HMI cable is connected to the CAN port.

If the HMI must be formally logged into: Logging on via the menu occurs in exactly the same way as logging off.

If the HMI is disconnected from the CAN bus, without first logging it off, the pump remains stationary.

WARNING!
An on/off switch may not be fitted on the pump, dependent on the identity code and installation.

To be able to switch off the pump (to a zero-volts state) independently from the entire installation (e.g. for repair), use an electrical isolating device in the mains supply cable, e.g. a mains switch or a plug / socket combination. Clearly identify this isolating device as such.

8.7.4 Security (SECURITY menu)

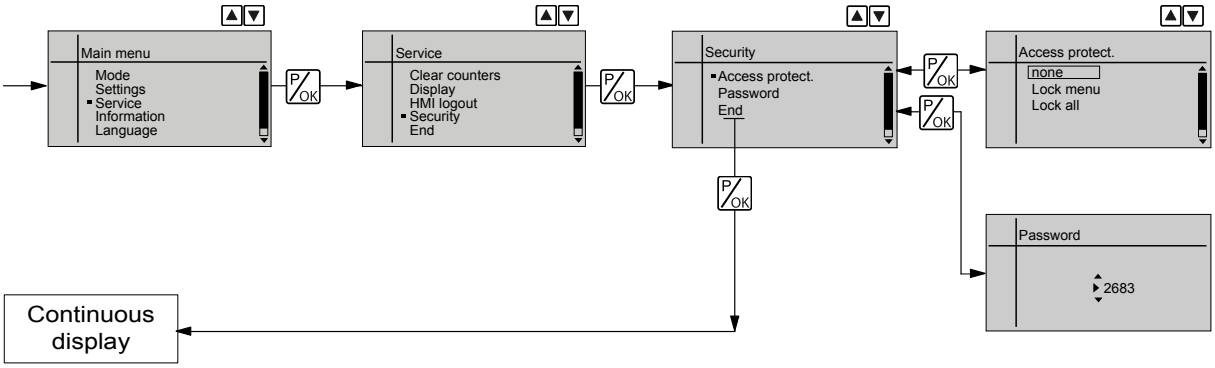

In the *„SECURITY“* menu, you can enter for which parts of the adjustment options an *„Access protect“* should apply and a *„password“* be specified.

This menu itself is ALWAYS password protected.

As supplied the „password“ is "1111".

8.7.4.1 Access protect.

In the first menu option, you can either set *„None“* (*„Access protect“*) or *„Lock menu“* or *„Lock all“* :

- Select *„None“*, to clear a set *„Access protect“*.
- Select *„Lock menu“* to lock the adjustment mode (point ① in the overview "Operating/setting diagram", in the appendix).
- Select *„Lock all“* to lock the adjustment option for the directly adjustable variables in the continuous displays and to lock the stroke length (point ② in the overview "Operating/setting diagram", in the appendix), in addition to the adjustment mode.

If an Access protect is then set after 1 minute a padlock will appear instead of the " i " in the top left of the continuous display if in the meantime no key has been pressed.

8.7.4.2 Password

In this menu enter the number you want to use as a password.

The password applies for both locks.

8.7.4.3 Using Access protect and Password

Test

To test whether the menu is locked, press the *[P/OK]* key for 2 s.

If you try to change into a locked area, a *„Password“* request appears.

Overriding the Access protect.

To override the Access protect, enter the *„Password“* using the *[arrow keys]* and press the *[P/OK]* key.

Changing the stroke length variable

In the stroke adjustment dial has been turned, the padlock flashes, the pump stops and a fault alert and key appear. If you enter the code, the pump continues metering and the fault alert clears.

8.8 Information about the pump (INFORMATION menu)

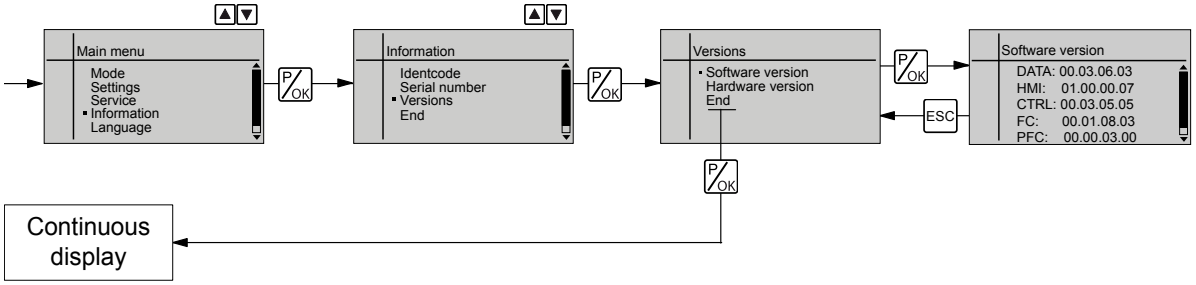

In the "Info" sub-menu you can read off the following identification numbers:

- Identity Code
- Serial number
- Software versions
- Hardware versions

8.9 Set language (LANGUAGE menu)

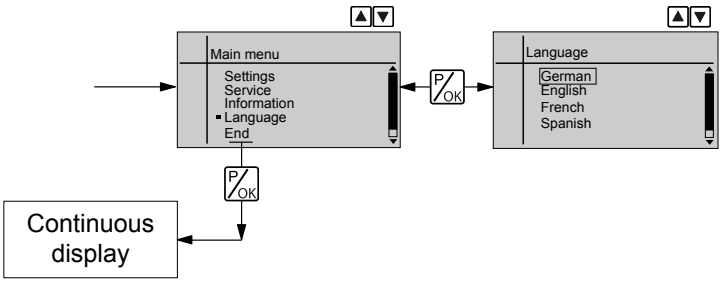

In the *„LANGUAGE“* menu, you can select the desired operating language.

9 Start Up

Safety information



WARNING!

Fire hazard with flammable media

Only with flammable media: They can be ignited by oxygen.

– The pump may not work if there is a mixture of feed chemical with oxygen in the liquid end. A specialist may need to take appropriate actions (using inert gas, ...).



CAUTION!

Feed chemical could escape

– Check suction and discharge lines, and liquid end with valves for leak-tightness and tighten if necessary.
– Check whether the necessary flushing pipes or bleed lines have been connected.



CAUTION!

Prior to commissioning, check that the pump and corresponding ancillary equipment is connected in compliance with the regulations.



CAUTION!

Adhere to the instructions in the frequency converter operating instructions when using pumps with speed control

Diaphragm rupture sensor



CAUTION!

Danger resulting from unnoticed diaphragm rupture

If the pump has been ordered with an electric diaphragm rupture sensor, it still has to be installed.

– Screw the enclosed diaphragm rupture sensor into the liquid end.



CAUTION!

Warning of unnoticed diaphragm rupture

Only above approximately 2 bar system back pressure is a signal generated upon a diaphragm rupture.

– Only rely on the diaphragm rupture sensor at back pressures greater than 2 bar.

CAUTION!

Possible environmental and material damage

In event the red gear bleeding plug is sealed, during operation it prevents any pressure compensation between the drive housing and the surroundings. This ensure that oil can be pushed from the drive housing.

– Remove the gear bleeding plug before commissioning.

Remove the gearbox vent stopper

Before start up pull off the red gearbox vent stopper, see chapter "Overview of equipment and control elements".

Checking the oil level

When the pump is idle, check whether the oil level in the pump is in the middle of the oil level indicator.

This will rule out the pump losing oil and suffering damage.

Checking the direction of rotation

When commissioning the unit, check whether the drive motor is rotating correctly - check this against the arrow on the motor housing or the diagram in the chapter entitled "Electrical Installation."

Using the integral relief valve

CAUTION!

Danger due to incorrect use of the integral relief valve

The integral relief valve can only protect the motor and the gear, and then only against impermissible positive pressure that is caused by the metering pump itself. It cannot protect the system against positive pressure.

– Protect the motor and gear of the system against positive pressure using other mechanisms.
– Protect the system against illegal positive pressure using other mechanisms.

CAUTION!

Danger of the integral relief valve failing

The integral relief valve no longer operates reliably with feed chemicals having a viscosity of greater than 200 mPa s.

– Only use the integral relief valve with feed chemicals having a viscosity up to 200 mPa s.

Priming against pressure

1. Hydraulically isolate the discharge line from the pump using an isolation device.
2. Turn the rotary dial on the integral relief valve in a counter-clockwise direction as far as the "open" stop.

   ⇨ The excess pressure escapes through the hose connector.
3. Run the pump until the feed chemical coming out of the hose connector is free from bubbles.
4. Turn the rotary dial on the integral relief valve in a clockwise direction up to the "close" stop.

   ⇨ **The pump can be started.**

When operating the integral relief valve close to the opening pressure, a minimal overflow into the overflow line can occur.

Adjusting the stroke length

Only adjust the stroke length when the pump is running. This is easier and also better for the pump.

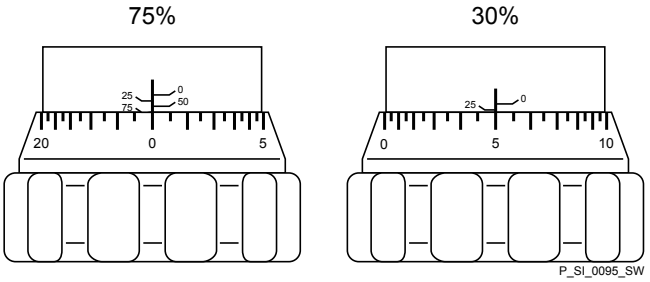

Fig. 30: Adjusting the stroke length

- 100% = 4 rotations
- 25 % = 1 rotation
- 0.5 % = 1 scale mark on stroke adjustment dial

10 Operation

WARNING!
Fire hazard with flammable media
Only with flammable media: They can be ignited by oxygen.

– The pump may not work if there is a mixture of feed chemical with oxygen in the liquid end. A specialist may need to take appropriate actions (using inert gas, ...).

WARNING!
Danger of electric shock
Incompletely installed electrical options can allow moisture into the inside of the housing.

– Knock-out openings in the pump housing must be equipped with matching modules or be sealed in a leak-tight manner.

WARNING!
Danger of electric shock
A mains voltage may exist inside the pump housing.

– If the pump housing has been damaged, you must disconnect it from the mains immediately. It may only be returned to service after an authorised repair.

CAUTION!
Do not over extend the spiral cable of the HMI.

It may only be extended to 0.5 m.

This chapter describes all the operating options available to you if the pump is displaying a continuous display - in the top left of the display there is an " i ".

– *For supplementary information, see the overviews "Control elements and key functions" in the chapter "Device overview and control elements" and "Operating/setting diagram" in the appendix.*
– *Also take note of the overview "Continuous displays" in the appendix. It shows which continuous displays are available in which operating mode and which variables are directly changeable in the relevant continuous display.*

10.1 Manual

Personnel: ■ Instructed personnel

Adjusting the stroke length

The stroke length is adjusted by the stroke length adjustment knob within a range of 0 ... 100%. A stroke length of between 30 ... 100% is recommended to achieve the specified reproducibility.

The following operating options are available via the keys - see the next figure:

Stop/start pump

Stop the pump: Press the *[STOP/START]* key.

Start the pump: press the *[STOP/START]* key again.

Starting a batch

In *„Batch“* operating mode: briefly press key *[P/OK]*.

Changing to set up mode

In continuous display if you keep the *[P/OK]* key pressed for 2 s, the pump switches into adjustment mode - see "Adjustment" chapter.

If under *„Service ➔ Security ➔ Access protect“* the selection *„Lock menu“* or *„Lock all“* was set, then after pressing the key *[P/OK]* the *„Password“* must first be entered.

Checking adjustable variables

Each time you press the *[i/>]* key, you can see a different continuous display possibly mixed with error messages. The number of continuous displays depends on the identity code, the selected operating mode and the connected additional devices.

The same applies for auxiliary displays, which are accessed a longer single press of the key *[i/>]*.

Change directly adjustable variables

To change a variable (see below) directly in the corresponding continuous display, press one of the *[arrow keys]*.

If under *„Service ➔ Security ➔ Access protect“* the selection *„Lock all“* was set, then after pressing the key *[P/OK]* the *„Password“* must first be entered.

The directly changeable variables are in detail:

Stroke rate

In operating modes *„Manual“*, *„Contact“* and *„Batch“*:

You can change the stroke rate in the "Stroke rate" continuous display.



To change a precisely previously set feed rate (possibly specified in litres), there is an option of changing it via the stroke rate. As the stroke rate is digitally processed, there is no tolerance.

By contrast, changing via the stroke length interferes with the mechanical tolerance.

Capacity

You can change the capacity once the pump has been calibrated in the "Capacity" continuous display.



To change a precisely previously set feed rate (possibly specified in litres), there is an option of changing it via the capacity. As the capacity is digitally processed, there is no tolerance.

By contrast, changing via the stroke length interferes with the mechanical tolerance.

Factor

Only in *„Batch“* mode: The factor is the number of strokes which are triggered upon an external pulse or pressing of key *[P/OK]*.

Batch size

Only in *„Batch“* mode: The batch variable is the metering volume, which is metered at an external pulse or pressing of key *[P/OK]*.

If adjustment using the *[arrow keys]* is not precise enough, use the stroke adjustment dial for fine adjustment.

Other key functions:

Priming key

Simultaneous pressing of the two *[arrow keys]* triggers the "Priming" function.

Acknowledge errors

Error displays are acknowledged by brief pressing of the *[P/OK]* key.

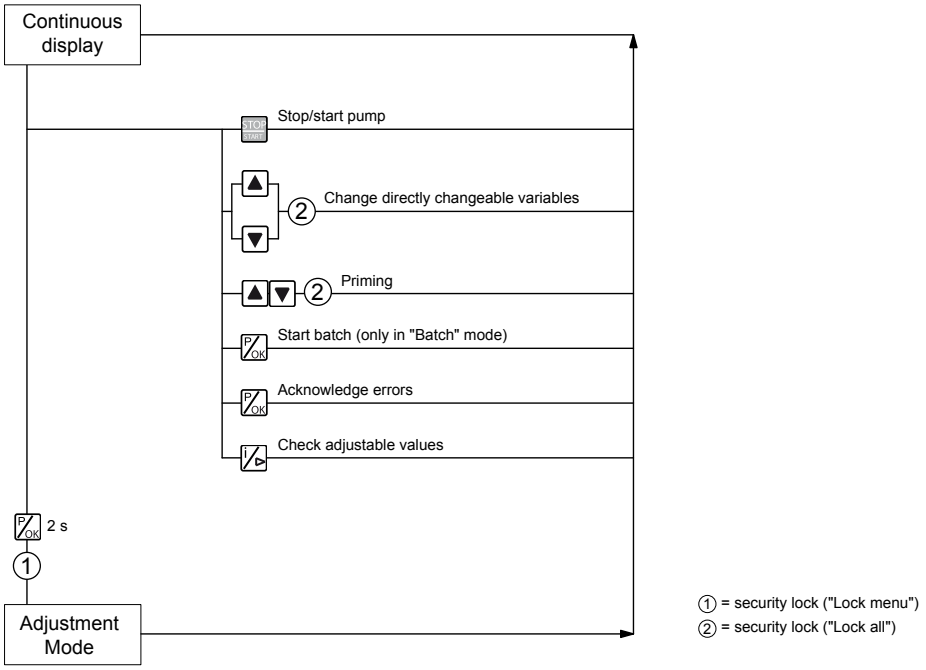

Fig. 31: Operating options with a locked operating menu

10.2 Remote operation

There is an option to control the pump remotely via a signal cable - refer to your system documentation and to the "Electrical Installation" chapter.

The pump can also be remotely controlled via PROFIBUS® (option). Supplementary instructions are available for this.

Or via an external CANopen bus. Supplementary instructions are available for this.

11 Maintenance

Safety information



WARNING!

Fire hazard with flammable media

Only with flammable media: They can be ignited by oxygen.

– The pump may not work if there is a mixture of feed chemical with oxygen in the liquid end. A specialist may need to take appropriate actions (using inert gas, ...).



WARNING!

It is mandatory that you read the safety information and specifications in the "Storage, Transport and Unpacking" chapter prior to shipping the pump.



CAUTION!

Warning of feed chemical spraying around

Feed chemical can spray out of the hydraulic components if they are manipulated or opened due to pressure in the liquid end and adjacent parts of the system.

– Disconnect the pump from the mains power supply and ensure that it cannot be switched on again by unauthorised persons.
– Depressurise the system before commencing any work on hydraulic parts.



WARNING!

Warning of hazardous feed chemical

Should a dangerous feed chemical be used: it may escape from the hydraulic components when working on the pump, material failure or incorrect handling of the pump.

– Take appropriate protective measures before working on the pump (e.g. safety glasses, safety gloves, ...). Adhere to the material safety data sheet for the feed chemical.
– Drain and flush the liquid end before working on the pump.



WARNING!

Danger of an electric shock

When working on the motor or electrical auxiliary equipment, there is a danger of an electric shock.

– Before working on the motor, take note of the safety instructions in its operating instructions!
– Should external fans, servomotors or other auxiliary equipment be installed, these should also be disconnected and checked that they are voltage free.

Third party spare parts for the pumps may lead to problems when pumping.

– *Use only original spare parts.*
– *Use the correct spare parts kits. If in doubt, refer to the exploded views and ordering information on our website www.prominent.com.*

Standard liquid ends:

Interval	Maintenance work	Personnel
After approx. 5,000 operating hours	Change gear oil - refer to "Changing gear oil" in this chapter.	Instructed personnel
Quarterly	Check the oil level.	
Quarterly*	■ Check that the metering lines are tight at the liquid end and check for leak-tightness. ■ Check that the suction valve and discharge valve are firmly fixed in place. ■ Check that the dosing head screws are tight. ■ Check the condition of the metering diaphragm - see *„Check the condition of the metering diaphragm“ on page 71*. ■ Check that the flow is correct: Allow the pump to prime briefly. ■ Check that the electrical connections are intact.	Technical personnel

* Under normal loading (approx. 30% of continuous operation).

Under heavy loading (e.g. continuous operation, aggressive feed chemicals etc.): shorter intervals.

Check the condition of the metering diaphragm

The diaphragm is a wearing part, the service life of which is dependent on the following parameters:

- System back pressure
- Operating temperature
- Feed chemical properties

When using abrasive feed chemicals, the diaphragm service life is reduced. In these cases, more frequent checking of the diaphragm is recommended.

Tightening torques

Data	Value	Unit
Tightening torque for screws:	7.5±0.5	Nm

Liquid ends with integral relief valve

WARNING!
Warning of eye injuries
When opening the relief valve, a spring under high tension can jump out.

– Wear protective glasses.

Changing gear oil

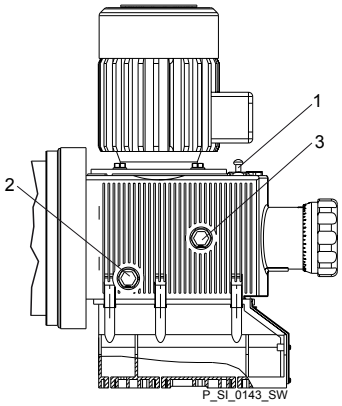

Fig. 32

Draining gear oil

1. Remove the vent screw (1).
2. Place an oil trough under the oil drainage plug (2).
3. Unscrew the oil drainage plug (2) from the power end housing.
4. Allow the gear oil to run out of the power end.
5. Screw in the oil drainage plug (2) with a new seal.

Filling with gear oil

Prerequisite: Gear oil in line with the "Ordering information" chapter is available.

1. Start the pump.
2. Slowly pour gear oil through the vent screw (1) opening until the oil inspection window (3) is half covered.
3. Allow the pump to run slowly for a further 1... 2 minutes
4. Replace the vent screw (1).

12 Carrying out repairs

Safety information



WARNING!

Fire hazard with flammable media

Only with flammable media: They can be ignited by oxygen.

– The pump may not work if there is a mixture of feed chemical with oxygen in the liquid end. A specialist may need to take appropriate actions (using inert gas, ...).



WARNING!

It is mandatory that you read the safety information and specifications in the "Storage, Transport and Unpacking" chapter prior to shipping the pump.



CAUTION!

Warning of feed chemical spraying around

Feed chemical can spray out of the hydraulic components if they are manipulated or opened due to pressure in the liquid end and adjacent parts of the system.

– Disconnect the pump from the mains power supply and ensure that it cannot be switched on again by unauthorised persons.
– Depressurise the system before commencing any work on hydraulic parts.



WARNING!

Warning of hazardous feed chemical

Should a dangerous feed chemical be used: it may escape from the hydraulic components when working on the pump, material failure or incorrect handling of the pump.

– Take appropriate protective measures before working on the pump (e.g. safety glasses, safety gloves, ...). Adhere to the material safety data sheet for the feed chemical.
– Drain and flush the liquid end before working on the pump.

12.1 Cleaning valves



Unsuitable spare parts for the valves may lead to problems for the pumps.

– *Only use new components that are especially adapted to fit your valve (both in terms of shape and chemical resistance).*
– *Use the correct spare parts kits. If in doubt, refer to the exploded views and ordering information on our website www.prominent.com.*

Only with the "Physiologically safe" design:

WARNING!
Product can be dangerously contaminated
Only use the spare parts from the "Physiologically safe" spare parts kits.

Personnel: ■ Technical personnel

Repairing ball valves

CAUTION!
Warning of personal injury and material damage
Feed chemical may escape from the liquid end, for example, if ball valves not repaired correctly.

– Only use new components which fit your valve - both in terms of shape and chemical resistance!
– Note the flow direction of the discharge and suction connectors when fitting the valve.

CAUTION!
Warning of feed chemical spraying around
PTFE seals, which have already been used / compressed, can no longer reliably seal a hydraulic connection.

– New, unused PTFE seals must always be used.

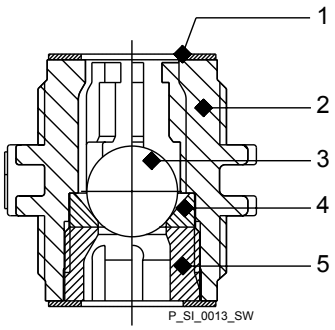

Fig. 33: Simple cross-section through ball valve

1 Flat seal
2 Valve body
3 Valve ball
4 Valve seat
5 Valve cap

12.2 Replacing the diaphragm

Third party spare parts for the pumps may lead to problems when pumping.

– *Use only original spare parts.*
– *Use the correct spare parts kits. If in doubt, refer to the exploded views and ordering information on our website www.prominent.com.*

Personnel: ■ Technical personnel

Requirements:

- If necessary take protective measures.
- Adhere to the material safety data sheet for the feed chemical.
- Ensure that the system is at atmospheric pressure.

1. Drain the liquid end: Place the liquid end on its head and allow the feed chemical to run out; flush out with a suitable medium; flush the liquid end thoroughly when using hazardous feed chemicals!
2. With the pump running, move the stroke adjustment dial to the stop at 0% stroke length.

   ⇨ The drive axle is now difficult to turn.
3. Switch off the pump.
4. Unscrew the hydraulic connectors on the discharge and suction side.
5. Unscrew the diaphragm rupture sensor from the dosing head.
6. Remove the 6 screws on the dosing head.
7. Remove the dosing head.
8. Check the condition of the diaphragm rupture sensor - see „*Checking the condition of the diaphragm rupture sensor“ on page 76*.
9. Loosen the diaphragm from the drive axle with a gentle backwards turn in an anti-clockwise direction.
10. Completely unscrew the diaphragm from the drive axle.
11. Tentatively screw the new diaphragm anticlockwise up to the stop on the drive axle.

    ⇨ The diaphragm now is now seated against the stop of the thread while the diaphragm flap is within the tolerance range.

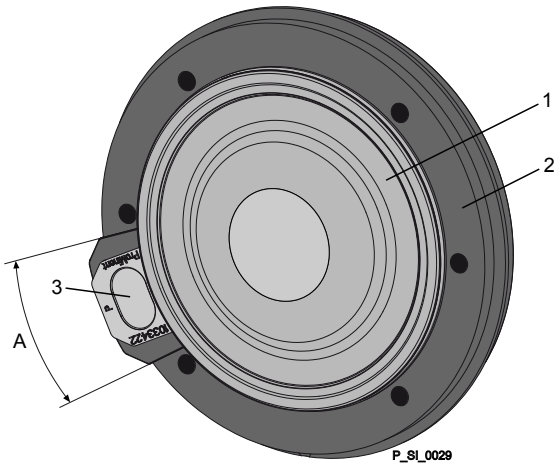

Fig. 34: Tolerance range of the flap on the backplate

1 Diaphragm
2 Backplate
3 Flap
A Tolerance range

12. Should this not work, remove dirt or swarf out of the thread and screw the diaphragm correctly onto the drive axle this time.
    ⇨ If this is still unsuccessful, contact ProMinent-ProMaqua customer service.
13. Place the dosing head with the screws onto the diaphragm - the suction connector should be pointing downwards in the pump's fitting position.
14. Tighten the screws gently to start with.
15. Screw the diaphragm rupture sensor into the dosing head.
16. Start up the pump and adjust the stroke length to 100%.
17. Stop the pump and tighten the screws crosswise. Tightening torque - see .
18. Start the pump and check for leaks at maximum pressure.

CAUTION!
Warning of escaping feed chemical
The liquid end may leak should it not be possible to check the tightening torque of the screws.
- Check the tightening torque of the screws after 24 hours of operation!
- With PP, PC and TT dosing heads also re-check the tightening torques quarterly!

Checking the condition of the diaphragm rupture sensor

1. If the inside of the diaphragm rupture sensor has become damp or dirt has penetrated it: replace.

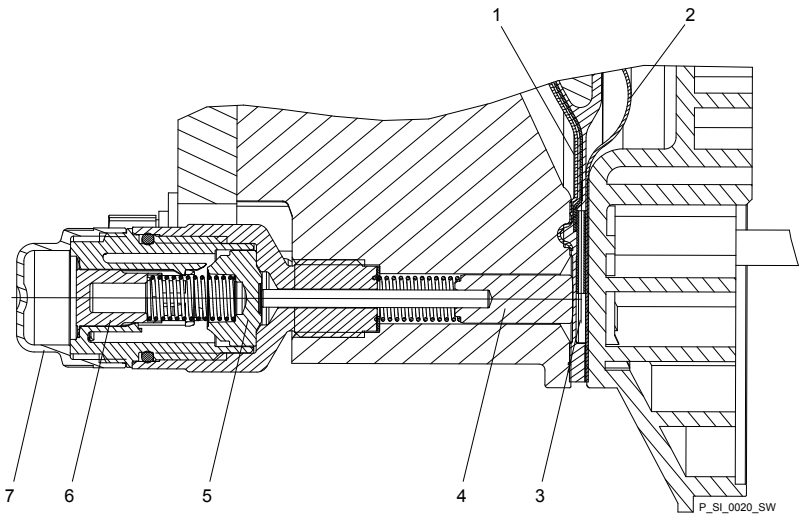

Fig. 35: Section through the Sigma diaphragm rupture warning system ("Visual break indicator" version)

1 Working layer (≙ operating diaphragm)
2 Safety layer (≙ safety diaphragm)
3 Flap
4 Plunger
5 Diaphragm rupture sensor
6 Cylinder, red
7 Cover, transparent

2. If the piston of the diaphragm rupture sensor - see Fig. 35, item 4 - should have become dirty or damp, clean both it and the hole in which it runs.

3. Check whether it can move freely in the hole.
4. Refit the clean diaphragm rupture sensor with the clean piston.
5. Test the diaphragm rupture sensor.

Optical diaphragm rupture sensor

1. Unscrew the transparent cover from the diaphragm rupture sensor.
2. Press the red cylinder into the diaphragm rupture sensor until it engages.
3. Press the piston on the other side of the diaphragm rupture sensor with a blunt, smooth object into the dosing head (approximately 4 mm) until it triggers.



CAUTION!

Feed chemical may escape

If the expandable flap of the diaphragm is damaged, then feed chemical can escape when there is a diaphragm rupture.

The piston must not be scratched, it must remain completely smooth so that during operation it does not damage the expandable flap of the diaphragm.

4. Press the red cylinder into the diaphragm rupture sensor again and repeat the test.
5. If it does not trigger both times, replace the membrane rupture sensor.
6. After a successful test, screw the transparent cover onto the diaphragm rupture sensor and then continue at the top by fitting the diaphragm.

Electrical diaphragm rupture sensor

1. Press the piston of the diaphragm rupture sensor with a blunt, smooth object into the dosing head (approximately 4 mm) until the monitor triggers alarm.



CAUTION!

Feed chemical may escape

If the expandable flap of the diaphragm is damaged, then feed chemical can escape when there is a diaphragm rupture.

The piston must not be scratched, it must remain completely smooth so that during operation it does not damage the expandable flap of the diaphragm.

2. Repeat the test.
3. If the monitor does not trigger an alarm both times, replace the membrane rupture sensor.
4. After a successful test, continue at the top by fitting the diaphragm.

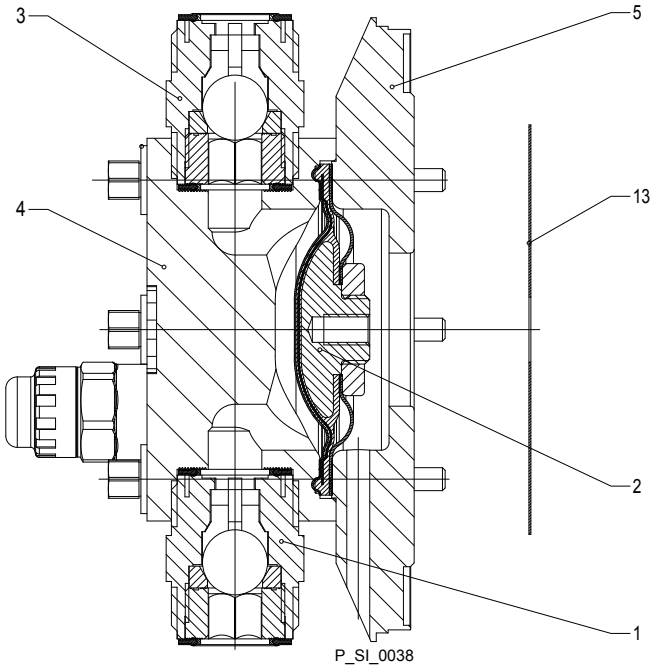

Fig. 36: Cross-section through the liquid end

1 Suction valve
2 Diaphragm
3 Discharge valve
4 Dosing head
5 Backplate
13 Safety diaphragm

13 Troubleshooting

Safety information



WARNING!

Fire hazard with flammable media

Only with flammable media: They can be ignited by oxygen.

– The pump may not work if there is a mixture of feed chemical with oxygen in the liquid end. A specialist may need to take appropriate actions (using inert gas, ...).



WARNING!

Danger of an electric shock

Personnel working on electrical parts can be electrocuted if all electrical lines carrying current have not been disconnected.

– Disconnect the supply cable before working on the motor and prevent it from being reconnected accidentally.
– Any separately driven fans, servo motors, speed controllers or diaphragm rupture sensors fitted should also be disconnected.
– Check that the supply cables are de-energised.



WARNING!

Warning of hazardous feed chemical

Should a dangerous feed chemical be used: it may escape from the hydraulic components when working on the pump, material failure or incorrect handling of the pump.

– Take appropriate protective measures before working on the pump (e.g. safety glasses, safety gloves, ...). Adhere to the material safety data sheet for the feed chemical.
– Drain and flush the liquid end before working on the pump.



CAUTION!

Warning of feed chemical spraying around

Feed chemical can spray out of the hydraulic components if they are manipulated or opened due to pressure in the liquid end and adjacent parts of the system.

– Disconnect the pump from the mains power supply and ensure that it cannot be switched on again by unauthorised persons.
– Depressurise the system before commencing any work on hydraulic parts.

13.1 Faults without a fault message

Fault description	Cause	Remedy	Personnel
Pump does not prime in spite of full stroke motion and bleeding.	Minor crystalline deposits on the ball seat due to the valves drying out.	Take the suction hose out of the storage tank and thoroughly flush out the liquid end.	Technical personnel

Fault description	Cause	Remedy	Personnel
	Serious crystalline deposits on the ball seat due to the valves drying out.	Dismantle the valves and clean them - refer to the "Overhaul" chapter.	Technical personnel
Fluid is escaping from the backplate.	The screws in the dosing head are too loose.	Tighten the screws in the dosing head in a diagonal pattern - refer to the "Repairs" chapter for tightening torque.	
	The diaphragm is not leak-tight.	Replace the diaphragm - refer to the "Overhaul" chapter. If a diaphragm rupture has been indicated, clean the diaphragm rupture reporter, refer to the "Overhaul" chapter.	Technical personnel
The CAN LED flickers after connection of the HMI to the pump.	The software versions of the pump and HMI are different.	Wait. In the log term, arrange for service to update the pump software.	
Green LED display (operating indicator) does not light up.	The wrong mains voltage or no mains voltage is connected.	Connect the pump correctly to the specified mains voltage - according to the specification on the nameplate.	Electrician

13.2 Fault messages

Red LED "Fault indicator" lights up.

Fault description	Cause	Remedy	Personnel
The "Level" symbol ⊘ appears flashing on the LCD screen, plus the error message *„Level error“* E-33-3 and the pump stops.	The fluid level in the storage tank has reached "Liquid level low 2nd stage".	Top up the storage tank.	Technical personnel
The symbol "External" ⇆ **MEM**appears flashing on the LCD screen plus the error message *„Memory overflow“* E-34-3 and the pump stops.	The stroke tank has overflowed.	Rectify the cause, then press the *[P/OK]* key (think through the consequences for the process!).	Technical personnel
The symbol **i < 4mA**appears flashing on the LCD screen plus the error message *„Under 4mA“* E-35-3 and the pump stops.	The pump is in *„Analog“* *„operating mode“*, a fault behaviour has been programmed in the *„ANALOG“* menu and the control current has fallen below 4 mA.	Eliminate the cause of the low control current or	Technical personnel
The symbol **i > 20mA**appears flashing on the LCD screen plus the error message *„Under 20 mA“* E-36-3 and the pump stops.	The pump is in *„Analog“* *„operating mode“*, a fault behaviour has been programmed in the *„ANALOG“* menu and the control current has risen above 23 mA.	Eliminate the cause of the high control current or	Technical personnel
The symbol "Flow" ⊜ **FLOW**appears flashing on the LCD screen plus the error message *„Defective stroke dosing“* E-37-3 and the pump stops.	The dosing monitor is not correctly connected.	Connect the dosing monitor correctly and Press the *[P/OK]* key.	Electrician
	The dosing monitor reported too few strokes, more than set in the *„FLOW“* menu.	Press the *[P/OK]* key. Investigate and clear the cause	Technical personnel
The symbol "Membrane" ⟆ **DIA**appears flashing on the LCD screen and the error message *„Diaphragm break“* E-38-3 and the pump stops.	The diaphragm is broken.	Replace the diaphragm and clean the diaphragm rupture sensor, refer to the "Repair" chapter.	Technical personnel

Fault description	Cause	Remedy	Personnel
The symbol "Stroke length adjustment" **STRK** appears flashing on the LCD screen plus the error message *„Stroke length mis-set“* E-39-3 and the pump stops.	The stroke adjustment dial was rotated by more than 10% while the menu was locked.	Turn the stroke adjustment dial back or enter the password.	Technical personnel
The symbol "Temperature" **FC** appears flashing on the LCD screen plus the error message *„Temperature FC“* E47-4 and the pump stops.	The pump is overloaded.	Rectify the cause, then press the *[P/OK]* key (think through the consequences for the process!).	Technical personnel
	The temperature is too high.	Rectify the cause, then press the *[P/OK]* key (think through the consequences for the process!).	Technical personnel
The symbol "Overpressure" **p+** appears flashing on the LCD screen plus the error message *„Overload “* E59-4 or E60-4 and the pump stops.	A constriction or a closed shut-off valve on the discharge side.	Open the shut-off valve or clear the constriction, then press the *[P/OK]* key (think through the consequences for the process!).	Technical personnel
The symbol "Block” **BLC** appears flashing on the LCD screen plus the error message *„Pump blocked“* E57-4 and the pump stops.	A constriction or a closed shut-off valve on the discharge side.	Open the shut-off valve or clear the constriction, then press the *[P/OK]* key (think through the consequences for the process!).	Technical personnel
The symbol "Mains" **PWR** appears flashing on the LCD screen plus the error message *„Mains voltage“* E51-5 and the pump stops.	No or incorrect mains voltage.	Connect the correct mains voltage.	Technical personnel

13.3 Warning messages

Yellow LED “Warning indicator” display lights up:

Fault description	Cause	Remedy	Personnel
The "Level" symbol **!** appears flashing on the LCD screen, plus the error message *„Level warning“* W1-3.	The fluid level in the storage tank has reached "Liquid level low 1st stage".	Top up the storage tank.	Instructed personnel
The symbol "Calibrate" **! cal** appears flashing on the LCD screen plus the error message *„Calibration warning“* W2-3.	The stroke adjustment dial of the calibrated pump was rotated by more than 10%.	Turn the stroke adjustment dial back or recalibrate the pump.	Instructed personnel
The "Flow" symbol **!** appears flashing on the LCD screen, plus the error message *„Defective strokes dosing“* W3-3.	The dosing monitor is not correctly connected.	Connect the dosing monitor correctly and Press the *[P/OK]* key.	Electrician
	The dosing monitor reported too few strokes, more than set in the *„FLOW“* menu.	Press the *[P/OK]* key. Investigate and clear the cause.	Technical personnel
The symbol "Membrane" **! dia** appears flashing on the LCD screen plus the error message *„Diaphragm break“* W4-3.	The diaphragm is broken.	Replace the diaphragm and clean the diaphragm rupture sensor, refer to the "Repair" chapter.	Technical personnel
The "Stroke length adjustment" symbol **!** appears flashing on the LCD screen, plus the error message *„Stroke length wrongly adjusted“* W5-3.	The stroke adjustment dial was rotated by more than 10% while the menu was locked.	Turn the stroke adjustment dial back or enter the code.	Technical personnel

Fault description	Cause	Remedy	Personnel
The symbol "Overload" ! p+appears flashing on the LCD screen plus the error message *„Overload “* W6-4.	A constriction or a closed shut-off valve on the discharge side.	Open the shut-off valve or rectify the constriction.	Technical personnel
The "Temperature" symbol !appears flashing on the LCD screen, plus the error message *„Temperature FC“* W7-4.	The frequency converter is overloaded.	Rectify the cause, then press the *[P/OK]* key (think through the consequences for the process!).	Technical personnel
	The temperature is too high.	Rectify the cause, then press the *[P/OK]* key (think through the consequences for the process!).	Technical personnel
The "Temperature" symbol !appears flashing on the LCD screen, plus the error message *„Temperature PFC“* W7-5.	The pump is overloaded.	Rectify the cause, then press the *[P/OK]* key (think through the consequences for the process!).	Technical personnel
	The temperature is too high.	Rectify the cause, then press the *[P/OK]* key (think through the consequences for the process!).	Technical personnel
The *„BUS“* symbol ! appears flashing on the LCD screen, plus the error message *„CANopen pump“* W8-3.	The HMI was connected to a CANopen pump.	Disconnect the HMI from the pump.	Technical personnel

13.4 All Other Faults

Please contact the responsible ProMinent branch or agency, see www.prominent.com - "Contact" - "Your contact worldwide" or as the case may be, the published by details of these operating instructions.

14 Decommissioning

Decommissioning



WARNING!

Fire hazard with flammable media

Only with flammable media: They can be ignited by oxygen.

– The pump may not work if there is a mixture of feed chemical with oxygen in the liquid end. A specialist may need to take appropriate actions (using inert gas, ...).



WARNING!

Danger of an electric shock

When working on the motor or electrical auxiliary equipment, there is a danger of an electric shock.

– Before working on the motor, take note of the safety instructions in its operating instructions!
– Should external fans, servomotors or other auxiliary equipment be installed, these should also be disconnected and checked that they are voltage free.



WARNING!

Danger from chemical residues

There is normally chemical residue in the liquid end and on the housing after operation. This chemical residue could be hazardous to people.

– It is mandatory that the safety note relating to the "Storage, Transport and Unpacking" chapter is read before shipping or transporting the unit.
– Thoroughly clean the liquid end and the housing of chemicals and dirt. Adhere to the safety data sheet for the feed chemical.



WARNING!

Warning of hazardous feed chemical

Should a dangerous feed chemical be used: it may escape from the hydraulic components when working on the pump, material failure or incorrect handling of the pump.

– Take appropriate protective measures before working on the pump (e.g. safety glasses, safety gloves, ...). Adhere to the material safety data sheet for the feed chemical.
– Drain and flush the liquid end before working on the pump.



CAUTION!

Warning of feed chemical spraying around

Feed chemical can spray out of the hydraulic components if they are manipulated or opened due to pressure in the liquid end and adjacent parts of the system.

– Disconnect the pump from the mains power supply and ensure that it cannot be switched on again by unauthorised persons.
– Depressurise the system before commencing any work on hydraulic parts.



WARNING!

Warning of eye injuries

When opening the relief valve, a spring under high tension can jump out.

– Wear protective glasses.



CAUTION!

Danger of damage to the device

The device can be damaged by incorrect and improper storage and transport.

– Take into account the information in the "Storage, Transport and Unpacking" chapter if the system is decommissioned for a temporary period.

(Temporary) decommissioning

1. Disconnect the pump from the mains/power supply.
2. Depressurise and bleed the hydraulic system around the pump.
3. Drain the liquid end by turning the pump upside down and allowing the feed chemical to run out.
4. Flush the liquid end with a suitable medium - observe the material safety data sheet! Flush the dosing head thoroughly when using hazardous feed chemicals!
5. Possible additional work - see chapter "Storage, Transport and Unpacking".

Final decommissioning

→ Also drain the gear oil - refer to the chapter entitled "Maintenance".

Disposal



CAUTION!

Environmental hazard due to incorrect disposal

– Note the local guidelines currently applicable in your country, particularly in regard to electronic waste!



CAUTION!

Environmental hazard due to gear oil

The pump contains gear oil, which can cause damage to the environment.

– Drain the gear oil from the pump.
– Note the local guidelines currently applicable in your country!

15 Technical data

15.1 Performance data

S2Cb

Type	Minimum pump capacity at maximum back pressure				Maximum stroke rate		Suction lift	Permissible priming pressure, suction side	Connector size
	bar	psi	l/h	gph	Strokes/min	ml/stroke	m WS	bar	R"-DN
16050 PVT	10	145	61	16	90	11.4	7	2	1" - 15
16050 SST	16	232	56	14	90	11.4	7	2	1" - 15
16090 PVT	10	145	109	28	160	11.4	7	2	1" - 15
16090 SST	16	232	99	26	160	11.4	7	2	1" - 15
16130 PVT	10	145	131	34	200	10.9	7	2	1" - 15
16130 SST	16	232	129	33	200	10.9	7	2	1" - 15
07120 PVT	7	102	150	39	90	27.4	5	1	1 1/ - 20*
07120 SST	7	102	150	39	90	27.4	5	1	1 1/ - 20*
07220 PVT	7	102	271	71	160	27.7	5	1	1 1/ - 20*
07220 SST	7	102	271	71	160	27.7	5	1	1 1/ - 20*
04350 PVT	4	58	353	93	200	29.4	5	1	1 1/ - 20*
04350 SST	4	58	353	93	200	29.4	5	1	1 1/ - 20*

All figures refer to water at 20 °C.

The suction lift applies to filled suction line and filled liquid end - when installed correctly.

** For Sigma types 07120, 07220 and 04350 the valves in the dosing head are of type DN 25 (G1 1/2). As for these types of pipes, DN 20 is generally sufficient (see technical data, suction/discharge side connector), the connector parts that can be ordered under the identity code (e.g. inserts) are already reduced to DN 20, i.e. piping and accessories can be installed in DN 20.*

Precision

Data	Value	Unit
Reproducibility	±2	% *

* - when installed correctly, under constant conditions, at least 30% stroke length and water at 20 °C

15.2 Viscosity

The liquid ends are suitable for the following viscosity ranges:

Version	Stroke rate, max.	Viscosity
	Strokes/min	mPas
Standard	180	0 ... 200
With valve springs	130	200 ... 500
With valve springs and suction-side feed	90	500 ... 1000*

* Only when the installation is correctly adjusted

15.3 Shipping weight

Types	Material version	Shipping weight
		kg
16050; 10090; 16130	PVT	17.2
	SST	20.0
07120; 07220; 04350	PVT	18.8
	SST	24.8

15.4 Wetted materials

Material version	Liquid end	Suction/pressure connector	Seals* / ball seat	Balls	Springs	Integral relief valve
PVT	PVDF	PVDF	PTFE/PTFE	Ceramic / glass **	Hastelloy C	PVDF / FPM or EPDM
SST	Stainless steel 1.4404	Stainless steel 1.4581	PTFE/PTFE	Stainless steel 1.4404	Hastelloy C	Stainless steel / FPM or EPDM

* Diaphragm is PTFE-coated

** Types 07120, 07220, 04350

15.5 Ambient conditions

15.5.1 Ambient temperatures

Pump, compl.

Data	Value	Unit
Storage and transport temperature	-10 ... +50	°C
Ambient temperature in operation (drive + motor):	-10 ... +45	°C

15.5.2 Media temperatures

PVT liquid end

Data	Value	Unit
Max. temperature long-term at max. operating pressure	65	°C
Max. temperature for 15 min at max. 2 bar	100	°C
Minimum temperature	-10	°C

SST liquid end

Data	Value	Unit
Max. temperature long-term at max. operating pressure	90	°C
Max. temperature for 15 min at max. 2 bar	120	°C
Minimum temperature	-10	°C

15.5.3 Air humidity

Air humidity

Data	Value	Unit
Maximum air humidity*:	95	% relative humidity

*non-condensing

15.5.4 Degree of Protection and Safety Requirements

Degree of protection

Protection against contact and humidity:

IP 65 in accordance with IEC 529, EN 60529, DIN VDE 0470 Part 1

A CAN plug or the supplied sealing cap must always be plugged into the CAN port for the HMI.

Safety Requirements

Degree of protection:

1 - mains power connection with protective earth conductor

15.6 Installation height

Data	Value	Unit
Maximum installation height*:	1000	m above standard zero

* with standard pumps: Fit at higher installation heights at your own risk.

with ATEX pumps: We urgently advise that you contact a specialist for ATEX motors at higher installation heights!

15.7 Electrical connection

The electrical data do not relate to the motor, but the pump, which is connected as a whole unit.

For the motor electrical data, use the motor data sheet from our website www.prominent.com.

Electrical data S2Cb pump

Identity code specification "power supply" - "U": 100 - 230 V ± 10%, 240 V ± 6%, 50/60 Hz

Data	Value	Unit
Capacity	220	W
Max. starting current	8.5	A

Electrical data at 100 V

Data	Value	Unit
Effective current	3.3	A
Switch on peak current, (for approx. 100 ms)	4	A

Electrical data at 230 V

Data	Value	Unit
Effective current	1.5	A
Switch on peak current, (for approx. 100 ms)	8	A

* internal switchover

Fuses

Fuse	Value	Order No.
Fuse, internal	6.3 AT - (1.5 kA)	732379

Only use the original fuses from ProMinent! It is not sufficient to use a fuse with the above fuse rating.

15.8 Diaphragm rupture sensor

Contact (standard)

Contact loading, max.

at voltage	Maximum current
30 V DC	1 A

The contact is an opener.

The contact is an potential-free.

– *For safety reasons we recommend connecting to a protective low voltage, e.g. in accordance with EN 60335-1 (SELV).*
– *The cable can be poled as required.*

Namur sensor (Specified for EX zones)

5–25 V DC, in accordance with Namur or DIN 19234, potential-free design.

Data	Value	Unit
Rated voltage *	8	VDC
Power consumption - active surface uncovered	> 3	mA
Power consumption - active surface covered	< 1	mA
Rated switching distance	1.5	mm

* Ri ~ 1 kΩ

Cable colour	Polarity
blue	-
brown	+

15.9 Relay

The technical data for the relay are contained in the chapter "Installation, electrical".

15.10 Gear oil

Manufacturer	Name	Viscosity class (ISO 3442)	Order No.	Quantity	Quantity, required
Mobil	Mobil Gear 634 *	VG 460	1004542	1.0 l	0.5 l

* or comparative gear oil

15.11 Sound pressure level

Sound pressure level

Sound pressure level LpA < 70 dB according to EN ISO 20361

at maximum stroke length, maximum stroke rate, maximum back pressure (water)

16 Design Documents



Design documents, such as dimensional drawings, ordering data (exploded drawings), performance diagrams ... are available in the relevant online version of these operating instructions on our website.

When searching on the website, please use simply the 6-digit order number for these operating instructions - this can be found at the bottom left corner of the cover page. You can find an older version – if the website provides the print number – using the print number (say "BA G 059 04/15 EN" – which can be found at the bottom right of the cover page).

17 Declaration of Conformity for Machinery

In accordance with DIRECTIVE 2006/42/EC OF THE EUROPEAN PARLIAMENT AND OF THE COUNCIL, Appendix I, BASIC HEALTH AND SAFETY REQUIREMENTS, section 1.7.4.2. C.

We,

- ProMinent GmbH
- Im Schuhmachergewann 5 - 11
- D - 69123 Heidelberg, Germany,

hereby declare that the product specified in the following, complies with the relevant basic health and safety requirements of the Directive, on the basis of its functional concept and design and in the version distributed by us.

Any modification to the product not approved by us will invalidate this declaration.

Extract from the Declaration of Conformity

Designation of the product:	Metering pump, Sigma product range
Product type:	S2Cb...
Serial number:	see nameplate on the device
Relevant EC directives:	Machinery Directive (2006/42/EC) Compliance with the protection targets of the Low Voltage Directive (2014/35/EU) according to Appendix I, No. 1.5.1 of the Machinery Directive EMC Directive (2014/30/EU)
Harmonised standards applied, in particular:	EN ISO 12100 EN 809:1998 - A1:2009 + AC:2010 EN 61010-1:2010 EN 61000-6-2:2005 + AC:2005 EN 61000-6-4:2007 + AC:2011
Date:	20/04/2016

View the EC Declaration of Conformity at www.prominent.com.

18 Operating / adjustment overview

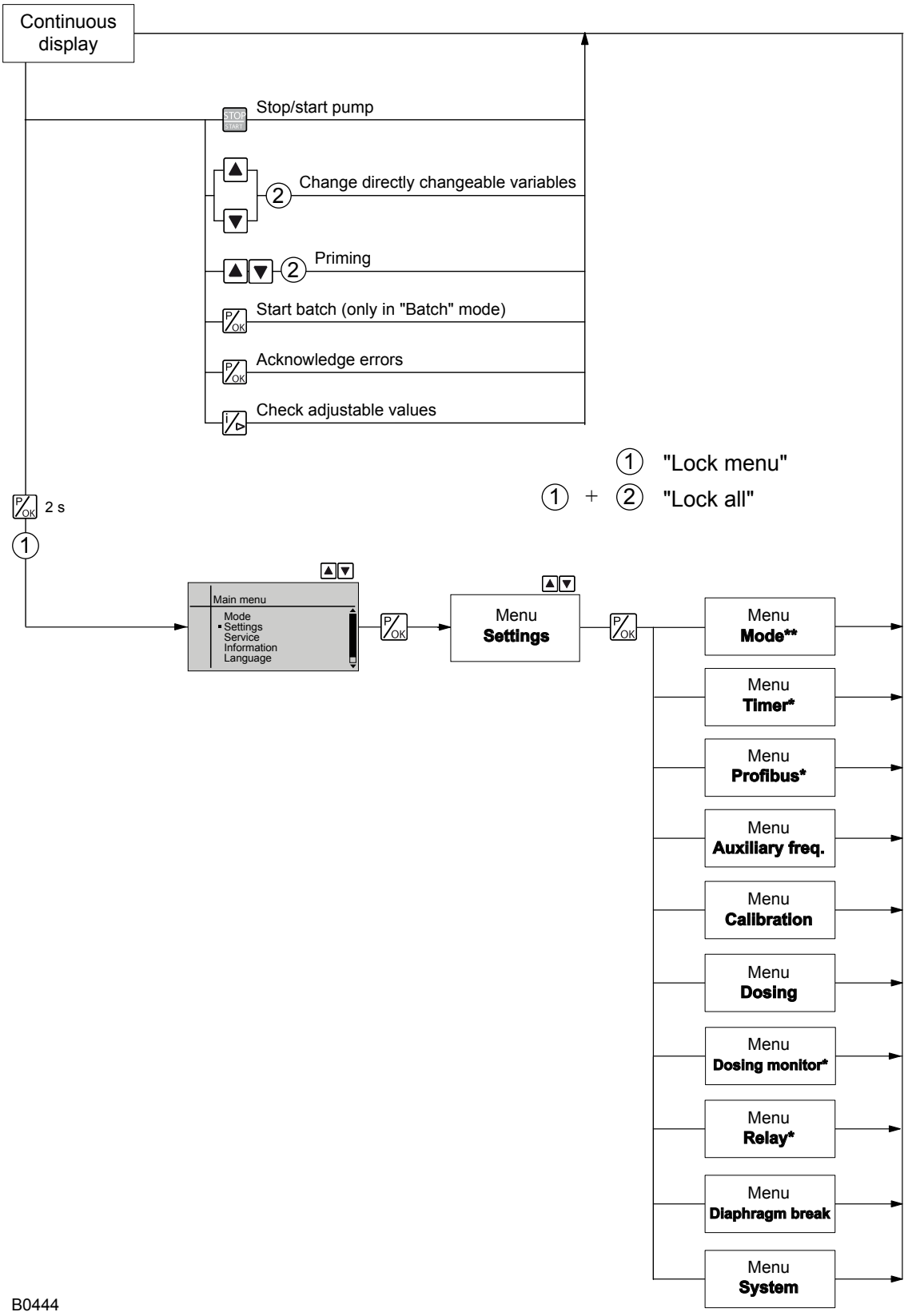

*Fig. 37: * Menu appears only with corresponding module*

19 Continuous displays

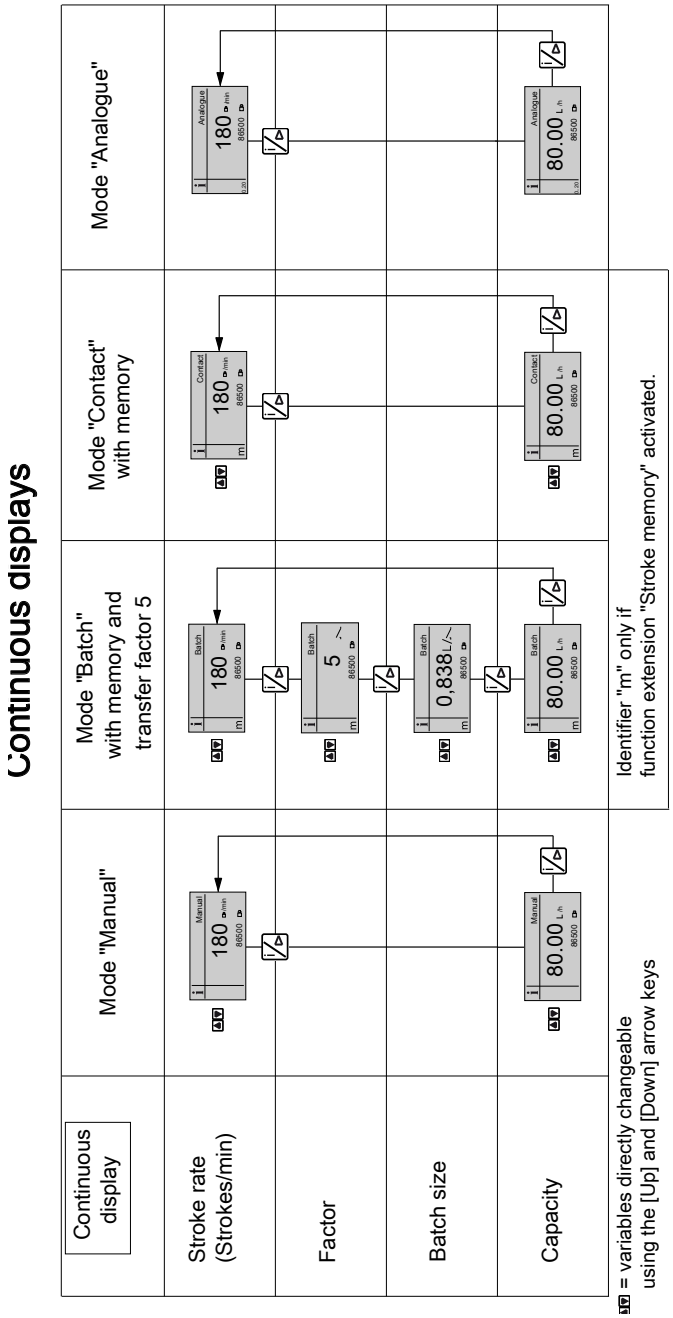

Auxiliary displays in the continuous display

Auxiliary display	Mode **"Manual"**	Mode **"Batch"** with memory and transfer factor 5	Mode **"Contact"** with memory and transfer factor 5	Mode **"Analog"**
Total number of strokes	86500 ⊐	86500 ⊐	86500 ⊐	86500 ⊐
Stroke length	65 %	65 %	65 %	65 %
Total litres (metering quantity)	576,67 L [1]	576,67 L [1]	576,67 L [1]	576,67 L [1]
Remaining strokes		25,00↓ ⊐ [2]	25,00↓ ⊐ [2]	
Factor		5 ⊐/⌟	5 ⊐/⌟	
Signal current (at the input)				12,7 mA [3]
Stroke rate (Strokes/min)	180 ⊐/min	180 ⊐/min	180 ⊐/min	180 ⊐/min
Dosing mode	Standard	Standard	Standard	Standard
Capacity	80,00 L/h [1]	80,00 L/h [1]	80,00 L/h [1]	80,00 L/h [1]
Batch size/ remaining litres		0,833↓ L [1, 2]	0,833↓ L [1, 2]	
Stroke rate (Strokes /h)	12000 ⊐/h	12000 ⊐/h	12000 ⊐/h	12000 ⊐/h

1 = only by running through the CALIBRATE menu, even after changing the operating mode
2 = only with function extension "Memory"
3 = only with current output

20 Index

1, 2, 3 ...

"External control" terminal 37
4 - 20 mA 49

A

Access protect. 61
Air humidity 88
Ambient conditions 87
Analog 23
Analog current output 22
Analogue error 52
Analogue operating mode 21, 49
Analogue output 58
Applied harmonised standards 92
Assembly 24
AUX 52
Auxiliary frequency 21, 23, 37, 52, 56

B

Basic Principles for Setting up the Control 42
Batch 21, 23, 45
Bleed valve 13
Bleeder valve 28
BUS 21

C

Calibration 21, 53
CAN bus 13, 39
CANopen status display 22
Capacity 86
Carrying out repairs 73
Cavitation 54
Checking adjustable variables 42
Cleaning valves 73
CLEAR COUNTERS 60
Climate 88
Connector size 86
Contact 21, 23, 46, 89
Continuous displays 42
Contrast 60
Control 56
Control elements 13
Current output 34

D

Decommissioning 83
Decontamination declaration 12
Degree of protection 88
Designation of the product 92
Diaphragm 19
Diaphragm rupture 59
Diaphragm rupture sensor 13, 89
Discharge opti. 54
Discharge valve 19
DISPLAY 60
Disposal 84
Dosing head 19
Dosing monitor 56
Dosing profile 54
Draining the liquid end 84
Drive motor 13
Drive unit 13

E

Electrical data 89
Emergency 11
Error 23
Error messages 42
Error processing 52
Extended 49, 52
External analog 23
External contact 23, 37
External frequency changeover 23

F

Factor 45, 46
Fault 56
Fault indicating / pacing relay (24 V) 34
Fault indicating relay 22
Fault indicating relay (24 V) 33
Fault indicating relay 230 V 33
Fault indicator 13, 22
Fault statuses 23
Flow 21, 56
Function indicator 22
Function settings 52
Functions 21, 23

G

Gallons 59
Gaseous feed chemicals 54
Gear oil 90

H

Hardware versions 62
Hierarchy of operating modes 23
HMI 25, 39
HMI login 60

HMI logout 60
HMI operating unit 39
Hygienic pump head 25

I

Identification of safety notes 8
Identity Code 62
Information 62
Information in the event of an emergency 11
Installation 26
Installation height 88
Integral bleeder valve 28
Integral relief valve 28
Intended use 8
IP 88

K

Keys 13, 15

L

Language 62
Leakage hole 71
LED 13
Level switch 22
Linear 50
Liquid end 13, 19
Litres 59

M

mA output 22
mA-Output 13
Maintenance 70
Manual 21, 23, 45
Manual operation 67
Materials 87
Memory 45, 46
Metering 54, 56
Metering pumps without integral relief valve 30
Mixing, optimal 54

N

Namur sensor 90
Nominal pressure 54
NPSH 54

O

Operating indicator 13, 22
Operating mode 44
Operating mode selection 44
Operating mode settings 44
Operating modes 20, 23
Operation 67
Optional module 13
Options 22
Output relay 22
Overload switch-off 21, 55
Overview of Equipment 13

P

Pacing relay 22, 33
Password 62
Pause 22, 23, 37
Power supply 40
Precision 86
Pressure stage 54
Priming 23
Priming key 22
PROFIBUS® 13
Protection against contact and humidity 88
Protection class 88
Pump capacity 86

Q

Qualification of personnel 9

R

Radioactive 12
Relay 57
Relay behaviour 57
Relay output 13
Relevant directives 92
Relief valve 13, 28
Remote operation 69
Replacing the diaphragm 75
Reproducibility 86
Return line 30

S

Safety Chapter 8
Safety Requirements 88
Scope of delivery 12
Secondary displays 43
Security 61
Semiconductor relay 22, 33, 34
Serial number 62, 92
SERVICE 59
Set up mode 43
Set Up, chapter 42
Shipping weight 87
Side band 51
Signalisation 56
Sockets 13

Software versions 62
Sound pressure level 11, 90
Standard 49
Standard installation 31
Start Up 64
Status LED CAN bus, internal 13
Stop 22, 23
Storage 12
Storage and transport temperature 87
Stroke length 62, 66
Stroke length adjustment wheel 13
Suction lift 86
Suction opti. 54
Suction valve 19
Symbols 31
System 59

T

Temperatures 87
Timer 13
Tolerance 56
Total litres 60
Total number of strokes 60
Transport 12

U

Unit 59
Unpacking 12

V

Versions 62
Viscosity 54, 87

W

Warning 56
Warning indicator 13, 22
Warning sign 8
Weight 87
Wetted materials 87



ProMinent GmbH
Im Schuhmachergewann 5-11
69123 Heidelberg, Germany
Germany
Telephone: +49 6221 842-0
Fax: +49 6221 842-419
Email: info@prominent.com
Internet: www.prominent.com

Heidelberg, 5, en_GB

© 2012