

创新型次世代可穿戴设备，采用特定解决方案

英飞凌为智能手表、运动手表、手环和医疗腕戴设备提供产品解决方案

Keith Choy
2021 年 6 月

Copyright © Infineon Technologies AG 2021. All rights reserved.

健康和生活方式设备 – –英飞凌是在快速增长的市场中推进创新的最佳合作伙伴

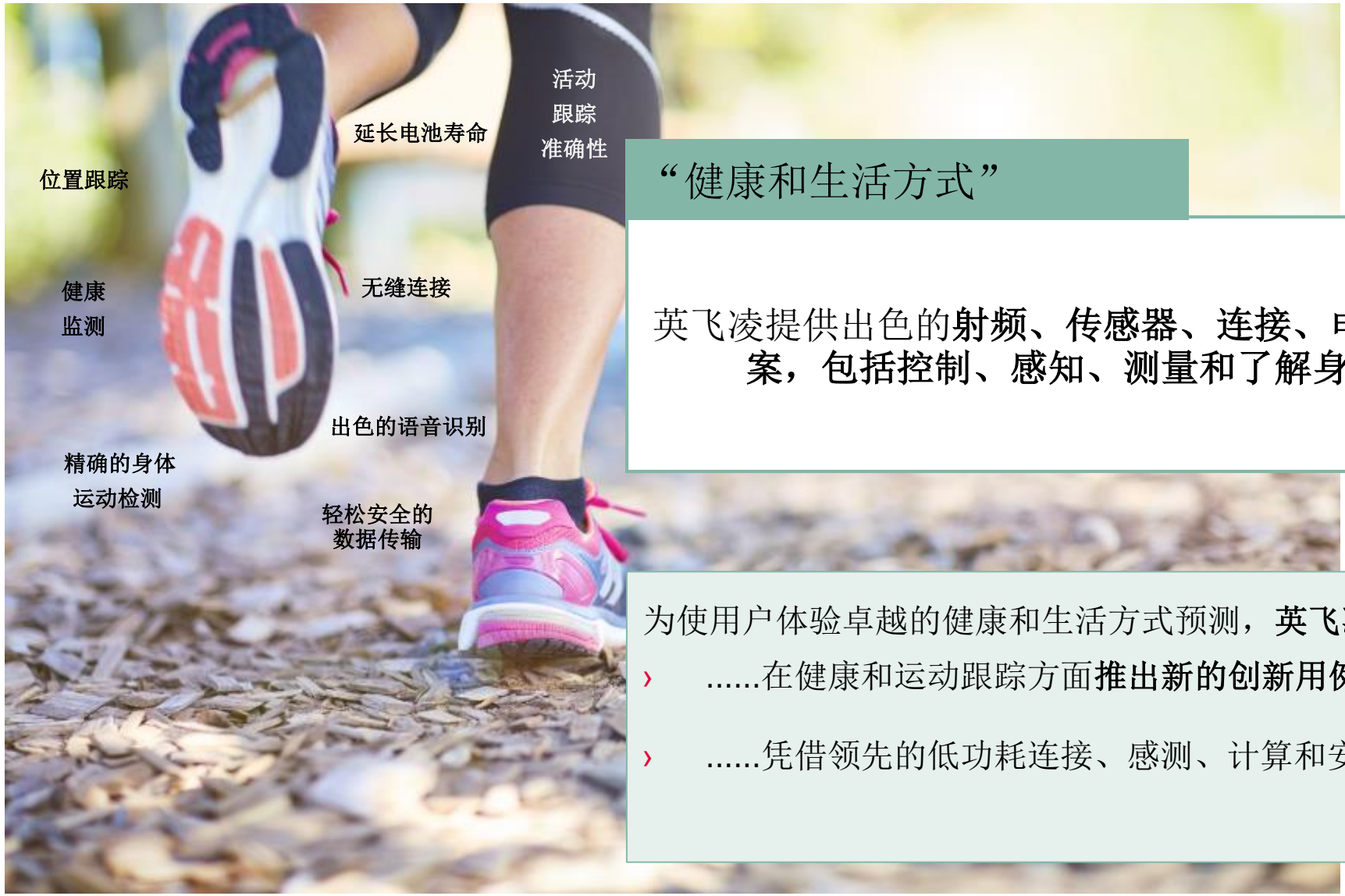

“健康和生活方式”

英飞凌提供出色的**射频、传感器、连接、电源、存储器和安全解决方案，包括控制、感知、测量和了解身体功能和健康状况。**

为使用户体验卓越的健康和生活方式预测，**英飞凌**.....

- .....在健康和运动跟踪方面**推出新的创新用例** (如血压监测等)
- .....凭借领先的低功耗连接、感测、计算和安全技术**延长电池寿命**

Copyright © Infineon Technologies AG 2021. All rights reserved.

以下几个主要趋势决定了健康和生活方式设备市场，并对消费者如何使用可穿戴设备产生了影响

主要市场趋势和驱动因素



传感器精度
增加所需的健康和健身监测，提升产品对于消费者的价值

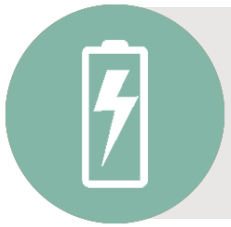

电源消耗和管理
是提高电池寿命的关键（能量收集、低功率半导体），并提高充电便利性



智能手表自主性
可穿戴设备正从配套设备转向独立的消费设备



数据安全和隐私
随着健康相关数据需要保护而变得越来越重要



蓝牙音频流
运动时可使用无线耳机，增加智能手表自主性



健康和用户之间的融合用于预测/预防的高级健康监测，
新功能:接触者跟踪和社交距离执行

Copyright © Infineon Technologies AG 2021. All rights reserved.

探索英飞凌一站式服务点，可提供出色的射频、传感器、连接、电源、存储器和安全解决方案



处理

- 微型控制器

存储器

- 非易失闪存技术 (NOR Flash)

连接

- BT/Wi-Fi/Combo IC
- 射频 (RF) 开关、低噪声放大器 (LNA) 和天线调谐器

安全

- eSIM 卡
- 加密元件+近场通讯 (NFC)
- 云验证

人机交互界面

- 触摸式界面
- 语音用户界面

设备保护

- 静电 (ESD) 保护
- 电池验证

充电

- 无线充电
- USB 充电

感测

- 压力传感器
- MEMS 麦克风

Copyright © Infineon Technologies AG 2021. All rights reserved.

智能手表、运动手表和腕带的主要用例







- 通知
- 定位追踪
- 身体状况监测 (睡眠、心率等)
- 健身监测
- 蓝牙音频流
- 无接触支付、访问控制和票务
- 睡眠监测
- 速度监测
- 语音录制和语音助手
- 信息可视化 (地图、新闻、视频等)
- 体温监测
- 用于安全数据传输或数据隐私的云验证
- 手势控制
- 身体状况监测 (心脏状况、血压、血糖)
- 更多移动网络访问和智能手机自主性
- 汽车门控

- 当今用例
- 未来用例

Copyright © Infineon Technologies AG 2021. All rights reserved.

智能手表——方框图

安全性

- OPTIGA™ Connect eSIM 解决方案
- SECORA™ Connect
- OPTIGA™ Authenticate IDoT
- 用于 UWB 的 RF 开关

连接

GPS LNA
- L1 频率——BGA123L4、BGA123N6（低功耗）、BGA524N6（性能）
- L2/L5 频率——BGA125N6

用于 Wi-Fi（BGS12WN6、BGS13SN8、BGS14WMA9）和蜂窝射频前端的 RF 开关

广泛的蜂窝 LNA 组合

天线调谐器
- BGSA12UGL8（尺寸最小）
- BGSA14GL10 (多余的谐振阻止器)

AIROC™ BT/Wi-Fi (CYW43012)
AIROC™ 低功耗蓝牙®和蓝牙 (CYW20719/CYW20721)

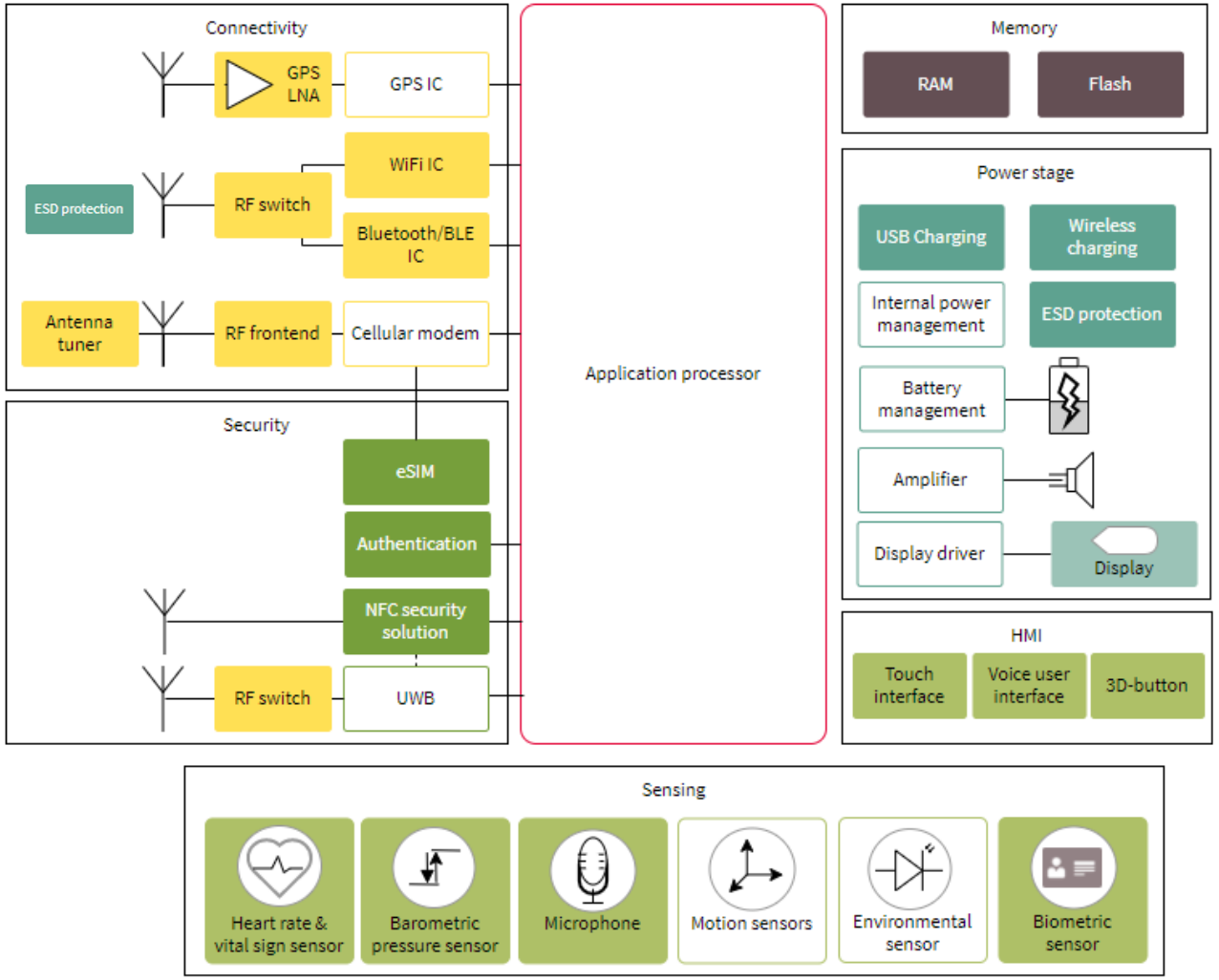

存储器

- F-RAM
- Semper Nano Flash S25FS-T

功率级

- ESD 保护
- 无线充电

人机交互界面

- MEMS 麦克风 (IM69D, IM73A)
- 3D——磁性传感器：TLI493-W2BW AO
- 在 PSoC™ 4 和 PSoC™ 6 中使用 CAPSENSE™ 触摸式人机交互界面

感测

- 压力传感器 (DPS310/DPS368)
- MEMS 麦克风 (IM69D120 /D130)

Copyright © Infineon Technologies AG 2021. All rights reserved.

英飞凌为您的可穿戴设备提供一站式服务点，可提供出色的射频、传感器、连接、电源、存储器和安全解决方案



IFX 作为一站式服务点，以广泛的产品组合解决所有主要功能模块问题

- GPS LNA
- 静电 (ESD) 保护
- 天线调谐器
- 4G / 5G LTE LNA
- RF 开关
- XENSIV™ 3D 磁性传感器
- XENSIV™ 60 GHz 雷达传感器
- XENSIV™ 压力传感器
- XENSIV™ MEMS 麦克风
- XENSIV™ PAS 二氧化碳传感器
- 无线充电
- AIROC™ Wi-Fi 和 Combo
- AIROC™ 低功耗蓝牙®和蓝牙
- 用于音频的 AIROC™ 蓝牙® 5.0 SOC
- Wi-Fi MCU
- SECORA™ Connect
- PSoC™ 6 微型控制器
- PSoC™ 4 微型控制器
- PSoCTM 4 低功耗蓝牙®（智能蓝牙）
- 包含 CAPSENSETM 技术的 PSoCTM
- OPTIGA™ Connect 用户 eSIM 解决方案
- OPTIGA™ Authenticate IDoT
- NOR Flash / F-RAM

www.infineon.com/wearables

Copyright © Infineon Technologies AG 2021. All rights reserved.

1 运动监测 – 气压计

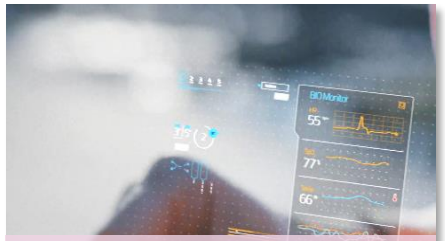
日常活动监测


抬臂/落臂监测


体育活动监测


台阶/楼梯计数


跌倒检测

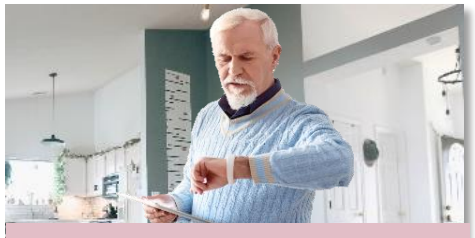
跌倒后报警触发

- 小型化系统的集成
- 更长电池续航
- 温度变化下，稳定压力读数
- 可适用于恶劣环境
- 检测手势和动作，热量消耗跟踪

Copyright © Infineon Technologies AG 2021. All rights reserved.

1 运动监测 – 气压计（电容传感技术）

Infineon 自封气压计

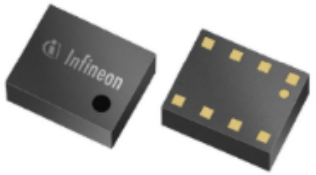

DPS310
低功耗& 高精度

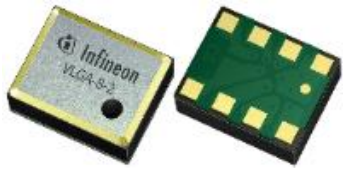

DPS368
DPS310 +
防水、防尘、防潮

小尺寸	DPS310: 2x2.5x1.0 mm DPS368: 2x2.5x1.1 mm
低功耗	峰值电流: 345 µA (压力测量) Standby: 0.5 / 1.0 µA
优异的温度稳定性	压力温度灵敏度: 0.5 Pa / °C
高精度	分辨率: ±0.002 hPa (2cm) 相对精度: ± 0.06 hPa 绝对精度: ± 1.0 hPa
可靠性	DPS368 防水(IPx8)[1], 防尘，防潮

1.水下50米1小时后，正常工作

Infineon 裸片业务





封装，测试，校准

采用Infineon裸芯片封装的合作伙伴
普通，防水气压计

Goertek

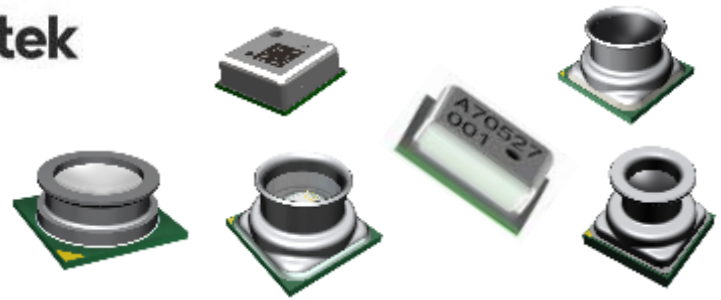

Luqin

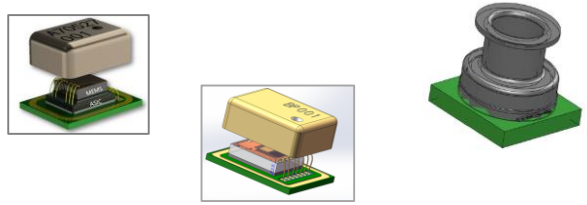

合作伙伴更多产品信息请参考此Link.

Copyright © Infineon Technologies AG 2021. All rights reserved.

2 语音功能 – 麦克风



语音通话



语音拍照



语音助手

- 清晰音质
  语音命令识别
- 录制响亮的音乐
- 更长电池续航
- 防水、防尘、防冲击

Copyright © Infineon Technologies AG 2021. All rights reserved.

2 语音功能 – 麦克风（MEMS技术）

英飞凌拥有广泛的麦克风产品组合，处于市场领导地位

Infineon 裸片业务

众多合作伙伴

Goertek　GETTOP 共达

瑞勤电子 RAYKING　MERRY ELECTRONICS CO., LTD.

钰太科技 ZILLTEK　HOSIDEN

partron　BSE

合作伙伴更多产品信息请参考此Link.

Infineon 自封麦克风

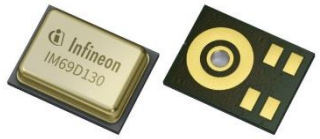

IM69D120/130

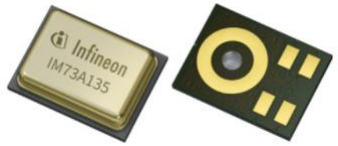

IM73A135
IP57 certified

高信噪比 SNR	IM69D130: 69 dB IM73A135: 73 dB
宽动态范围和高AOP	IM69D130: 130 dBSPL IM73A135: 135 dBSPL
低功耗	IM73A135 : 低功率模式70μA
高可靠性	IM73A135 : IP57

Copyright © Infineon Technologies AG 2021. All rights reserved.

Infineon RF & Protection Offering in Smart Watch

Vincent Yang -杨奎
Product Marketing
Jun. 2021

Agenda

1. Scope of the Smart Watch Application
2. Infineon RF & Protection Offering

Copyright © Infineon Technologies AG 2021. All rights reserved.

Agenda

1 Scope of the Smart Watch Application

2 Infineon RF & Protection Offering

Copyright © Infineon Technologies AG 2021. All rights reserved.

Smart Watch – Block Diagram



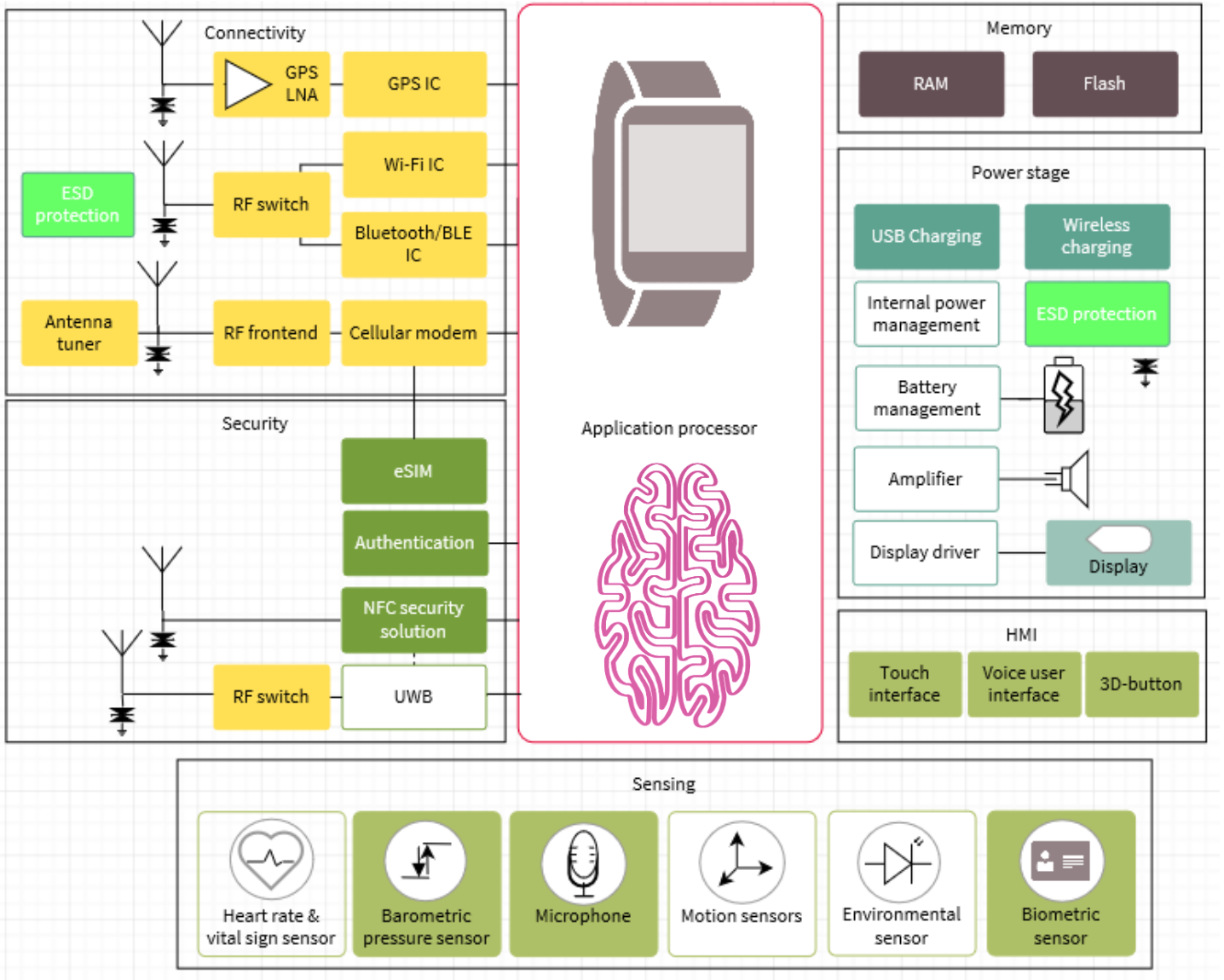

Copyright © Infineon Technologies AG 2021. All rights reserved.

Smart Watch Characteristics at a Glance

Characteristics:

- Multi Function
- Low Power Consumption
- Accuracy Navigation
- Wireless Connectivity
- Small factor
- Reliability





Copyright © Infineon Technologies AG 2021. All rights reserved.

Agenda

1 Scope of the Smart Watch Application

2 Infineon RF & Protection Offering

Copyright © Infineon Technologies AG 2021. All rights reserved.

Infineon RF & Protection Offering

Application and Solution

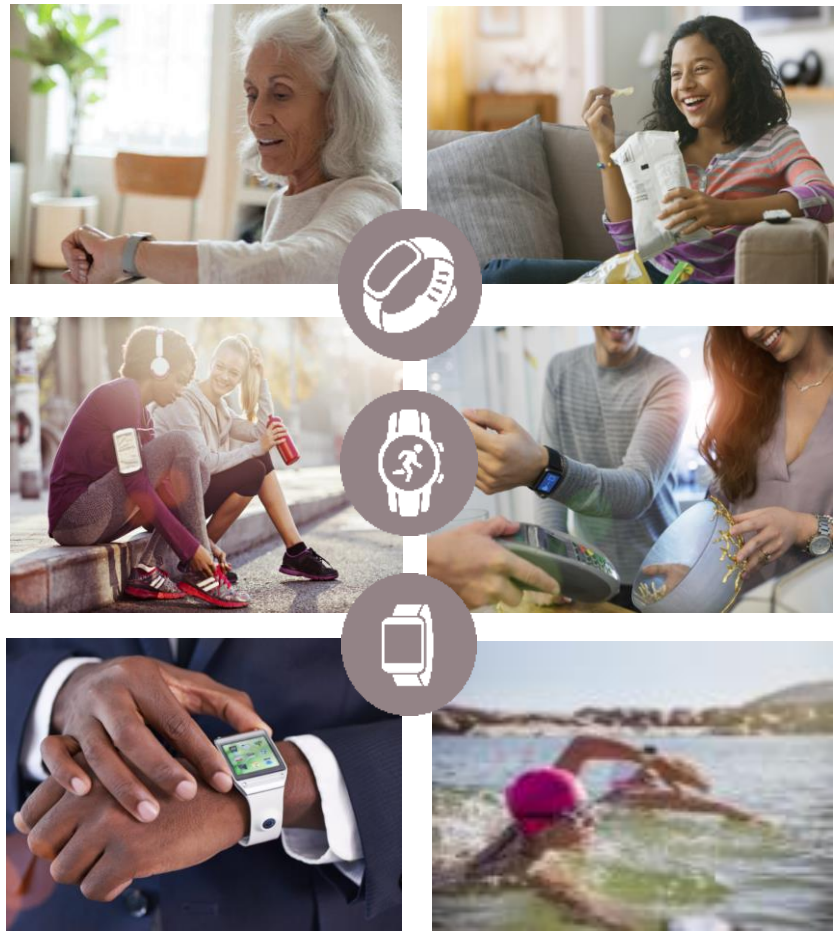

Focus Products Category

① GNSS LNA



② Cellular LNA



③ RF Switch

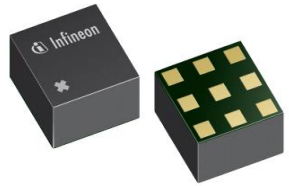

④ Antenna Tuner

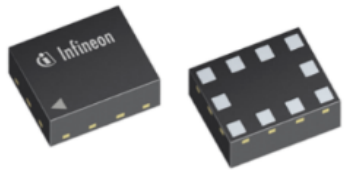

⑤ ESD Protection



Copyright © Infineon Technologies AG 2021. All rights reserved.

Wide GPS LNA Portfolio for best-in-class Sensitivity and User Experience

Block Diagram

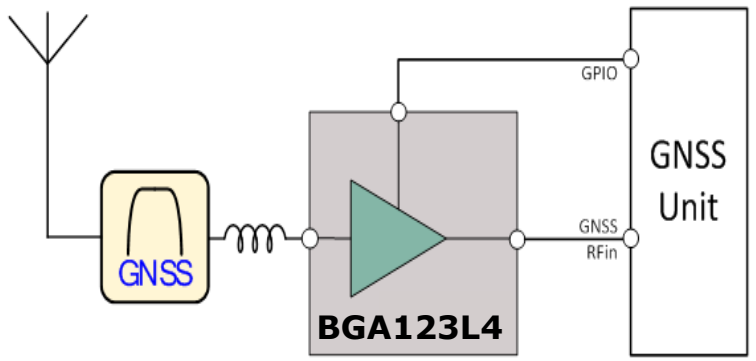

Size and Package



TSLP-4-1
0.7 x 0.7 mm

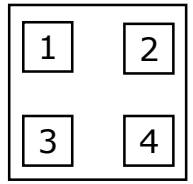

1	GND
2	RF OUT
3	RF IN
4	V_{cc}

6-pin standard
1.1 x 0.7 mm

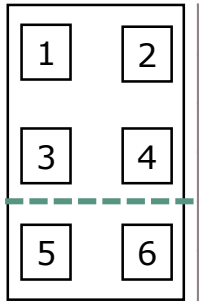

1	GND
2	RF OUT
3	RF IN
4	V_{cc}
5	Enable
6	GND

- Smallest size
- Lowest current
- Lowest NF
- High Gain
- Low power supply
- Drop in Compatible
- Flexible Design

Part Number	Band	Gain (dB)	NF (dB)	I_{cc} (mA)	V_{cc} (V)
BGA123N6	L1	19.0	0.75	**1.35**	1.1 – 3.3
BGA125N6	L2/L5	20.0	0.80	**1.35**	1.1 – 3.3
BGA123L4	L1 L2/L5	17.5 16.3	0.75 0.90	**1.1**	1.1 – 3.6
BGA524N6	L1 L2/L5	19.5 18.2	0.65 0.70	**2.5**	1.5 – 3.3

Copyright © Infineon Technologies AG 2021. All rights reserved.

①Dualband GNSS L1+L5 Solutions for Flexible Design
Single LNA for Compact Design

› Scenario1

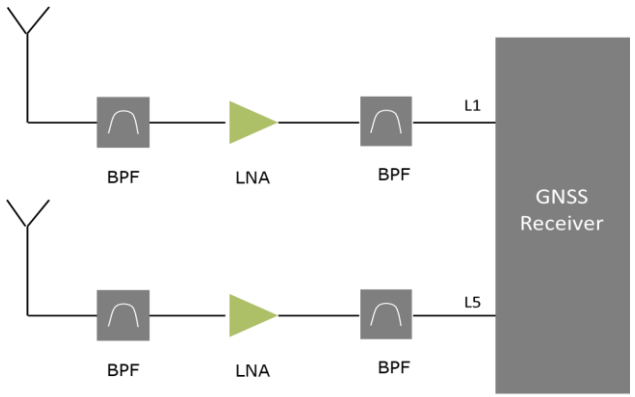

› Scenario2

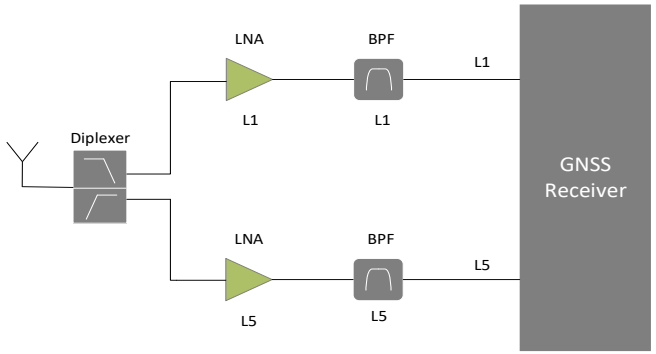

› Scenario3

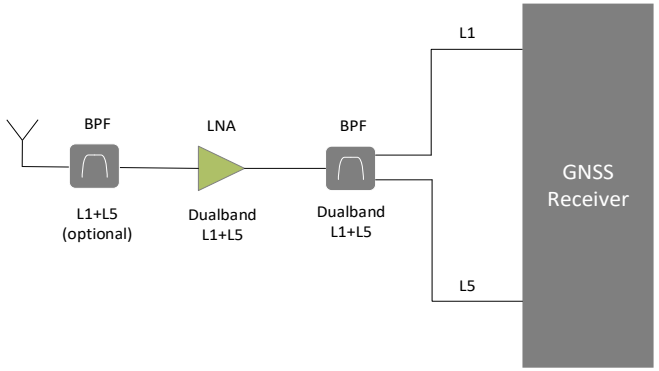

L1	L2 / L5
BGA123N6	
BGA125N6	
BGA123L4	
BGA524N6	

- **L1 LNA Matching for L5**
- **L5 LNA Matching for L1**
- **Flexible Matching to cover L1+L5**

Designed for Tuned to

Copyright © Infineon Technologies AG 2021. All rights reserved.

RF Frontend Portfolio of Cellular LNAs Boost Data Rate and Power Efficiency

Use cases	Cellular connectivity	Smartphone autonomy

High performance	**Great noise figure and gain** (LNAs) while covering wide frequency range	›	**Improved signal quality** and coverage
Flexible package variants	**Broad portfolio of LNAs for** different cellular frontend designs	›	**Reliable supplier** meeting customer requirements
Low power consumption	Cellular LNAs with **low Icc down to 2.2 mA**	›	**Increased battery lifetime** for cellular connected wearables

Selected portfolio highlights

2nd generation of **high gain bypass LTE LNAs BGA7x1BN6 family**

- Bypass- and high gain-mode
- High input Power handling:25dBm
- Supply voltage: 1.5 V to 3.6 V
- RF input and output internally matched to 50
- Pin to Pin Compatible



0.7 x 1.1 mm² (TSNP-6-2)

f [GHz]	0.7 – 1.0 1.8 – 2.7
Gain [dB]	13.6 ; 12.3
NF [dB]	0.75 ; 0.85
Icc [mA]	4.7; 4.3

3rd generation of **high gain bypass LTE LNAs BGA9H1BN6**

- Multi-state control: bypass- and 3 high gain-mode
- High input Power handling:25dBm
- Supply voltage: 1.1 V to 3.3 V
- RF input and output internally matched to 50
- Pin to Pin Compatible



0.7 x 1.1 mm² (TSNP-6-2)

f [GHz]	1.4 – 2.7
Gain [dB]	20.1
NF [dB]	0.5
Icc [mA]	2.2 to 5.5

Copyright © Infineon Technologies AG 2021. All rights reserved.

RF Switches for Best-in-Class Connectivity

Key Parts & Application			Best-in-Class Performance
WIFI & Low Power		 0.7 x 1.1 mm²	• Small size and Low IL<0.3dBIL@2.7GHz • Up to **6GHz**,even **9GHz** • Fast switching time for WIFI ,**<200ns**
SPDT BGS12WN6	(GPIO)		
SP3T BGS13SN8	(GPIO)	 1.1 x 1.1 mm2	
SP4T BGS14WMA9	(MIPI)		
High Power TRX		 0.7 x 1.1 mm²	• **37dBm** high power handling • **0.3dB** low IL@2.7GHz • Up to 6GHz and **Fast switching** for SRS
SPDT BGS12P2L6	(GPIO)		
SP4T BGS14MPA9	(MIPI)	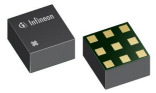 1.1 x 1.1 mm2	
High Power Swap Switch		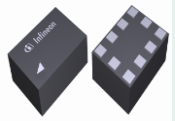 1.1 x 1.5 mm2	• **39dBm** high power handling • **0.4dB** low IL@2.7GHz,Up to **7.125GHz** • High isolation **>30dB@5GHz**
DPDT BGSX22G5A10	(GPIO)		
DPDT BGSX22G6U10	(GPIO)		

Copyright © Infineon Technologies AG 2021. All rights reserved.

Antenna Tuning Improves Antenna Efficiency and Power Radiation

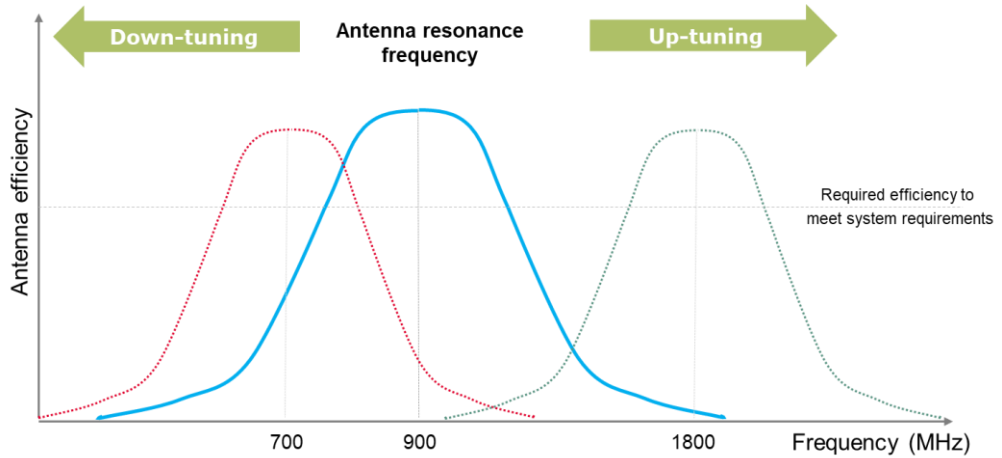

Example

- Space constrain and complex use case make antenna performance degradation
- Antenna impedance varies with frequency
- Dynamic de-tuning



Aperture Tuning

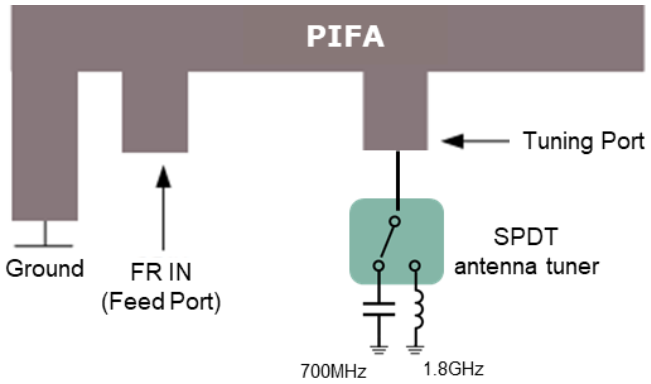

By using aperture tuning switch + discrete Capacitors and Inductors

* PIFA: Planar inverted F antenna

Aperture Tuning
Impedance Tuning

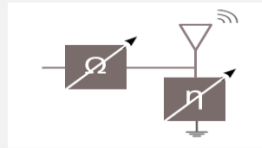

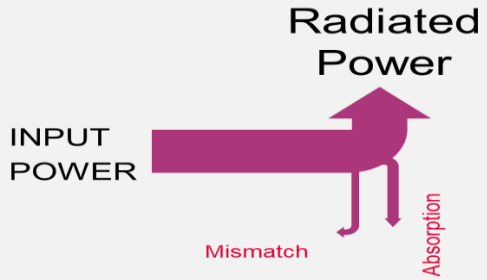

Adding **tunable** matching network

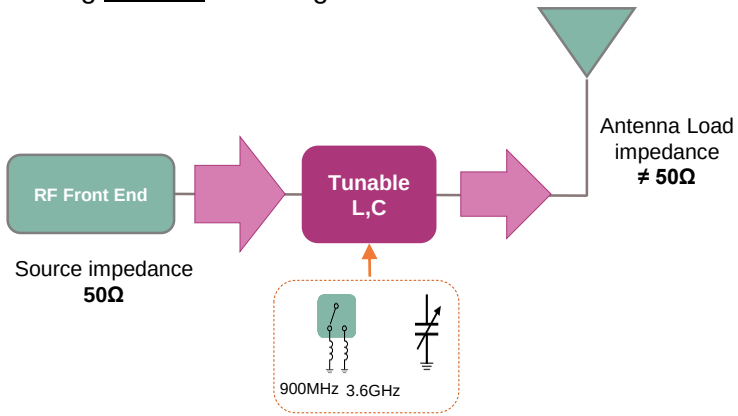

Impedance Tuning

- Most efficient and commonly used aperture tuner shifts the resonance of antenna to required bands
- Impedance tuner maximizes power transfer
- Adressing dynamic de-tuning

Copyright © Infineon Technologies AG 2021. All rights reserved.

④Infineon Antenna Centric Solutions (IACS) Boost Data Rate and Power Efficiency in Cellular Connected Wearables

Use cases	Cellular connectivity	Location tracking	Smartphone autonomy

High performance	**Broad portfolio of antenna tuner devices with best R_{on} and C_{off}** available for all customer requirements	›	**Improved signal quality** and coverage
Small size	**Smallest package(SPDT,2*SPST)** on the market **of 1.1 x 1.1 mm²** and flexible antenna design	›	**Smallest form factor designs** due to industrial design flexibility
Low power consumption	**Improving power consumption at similar signal quality level** through antenna centric device	›	**Increased battery lifetime** for cellular connected wearables

Selected portfolio highlights

SPDT & 2*SPST Tuner

- 1.1 x 1.1 mm² package, **smallest** SPDT, 2SPST on the market
- Designed for high-linearity antenna tuning
- 2 GPIO control
- Low harmonic generation
- 1.8 V VDD support (1.65 V min)
- P2P compatibility



(TSLP-8)

BGSA12UGL8
BGSA20VGL8
BGSA20UGL8

F [GHz]	0.4 – 6.0
R_{on} [Ω]	0.6 to 2.3
C_{off} [fF]	200 to 270
V_{RFmax} [V]	40-80

SP4T & 4*SPST Tuner

- 1.5 x 1.1 mm² Smallest Size
- High-linearity SP4T ,4SPST
- 2 or 3 GPIO (up to 8 states)
- MIPI Interface with Multi USID
- Low harmonic generation
- 1.8 V VDD support (1.65 V min)
- P2P compatibility

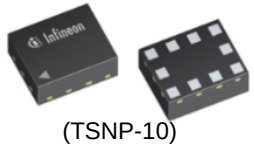

(TSNP-10)

BGSA14GN10
BGSA143/145/142G
BGSA142/143/145/147M
BGSA402M

F [GHz]	0.4 – 7.125
R_{on} [Ω]	0.8 to 1.6
C_{off} [fF]	110 to 230
V_{RFmax} [V]	45 to 80

Copyright © Infineon Technologies AG 2021. All rights reserved.

⑤Broad TVS Portfolio for Best Protection Performance Guaranteeing High User Experience

Use cases	Device protection		
	Multi-purpose interfaces	**High-speed interfaces**	**Antennas**
	› Ultra low clamping voltage for high protection level › Low leakage current for battery saving	› Ultra low clamping voltage for high protection level › Ultra low capacity for best signal immunity	› Ultra low capacity for best signal immunity › High linearity devices



Broad portfolio and supply security

Wide portfolio of TVS diodes meeting different protection requirements combined with **large and flexible capacity** production incl. safety stock

Reliable supplier meeting customer requirements



Small size

Ultra-small and thin packages 01005 (down to 0.4 x 0.2 x 0.15 mm)

Space-saving integration into device



High performance

High protection performance by ultra low clamping voltage at best price/performance ratio with TVS in chip scale package

Best user experience due to reliable protection from ESD events

Copyright © Infineon Technologies AG 2021. All rights reserved.

Infineon Provides Broad Portfolio of ESD Protection Components

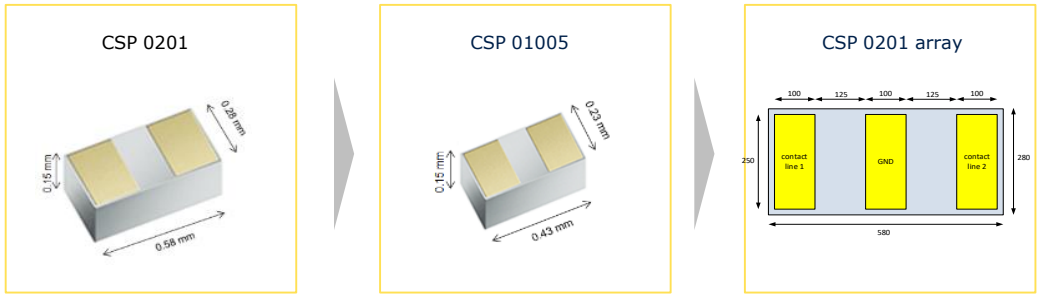

Antenna Protection

Functionality	IFX components
– Cellular	– ESD103-B1-02ELS
– WIFI	– ESD111-B1-W0201
– BT	– ESD144-B1-W0201
– NFC	– ESD145-B1-W01005

Charging

Functionality	IFX components
– Surge	– ESD307-U1-02N
– Vbus	– ESD311-U1-02N



USB interfaces

Functionality	IFX components
– High Speed	– ESD150-B1-W0201
– Low Speed	– ESD123-B2-W0201
– Vbus	– ESD245-B1-W0201
	– ESD246-B1-W01005
	– ESD239-B1-W0201
	– ESD240-B1-W01005

Multi-purpose interfaces

Functionality	IFX components
– Buttons	– ESD231-B1-W0201
– Sliders	– ESD239-B1-W0201
– Touch Panel	– ESD241-B1-W0201
– Audio	– ESD242-B1-W01005
– Low Speed I/O	

Copyright © Infineon Technologies AG 2021. All rights reserved.

Infineon Provides TLP Measurement Service to Reduce Design Effort

Test Setup

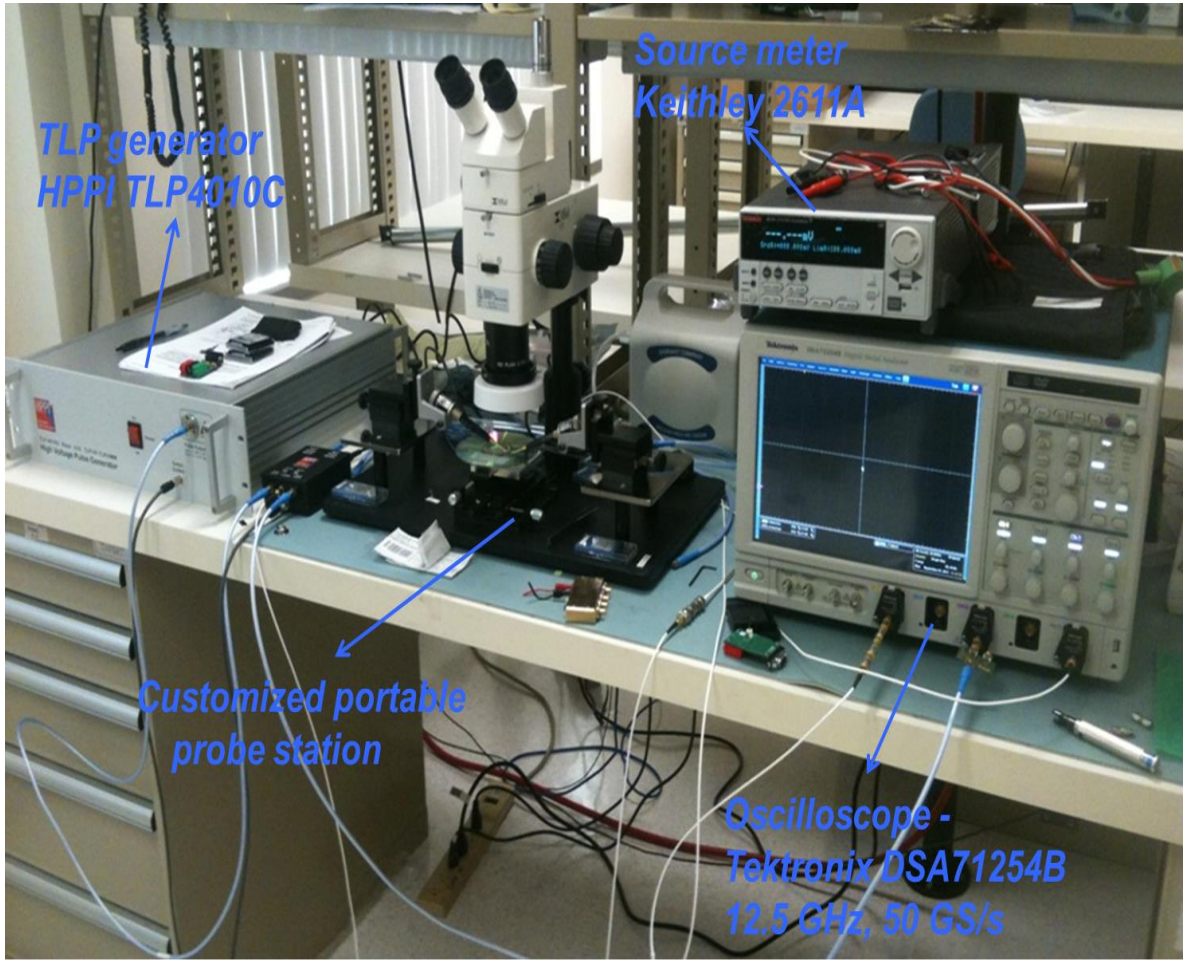

Board

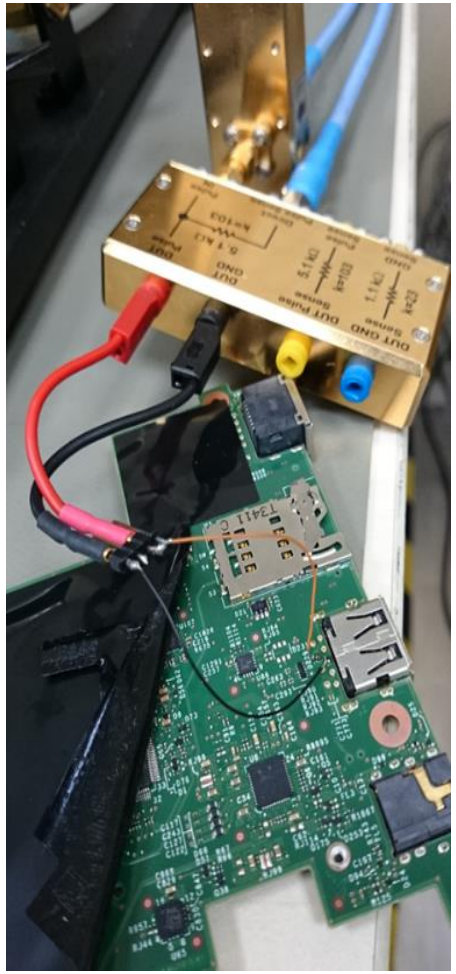

Measurement Result

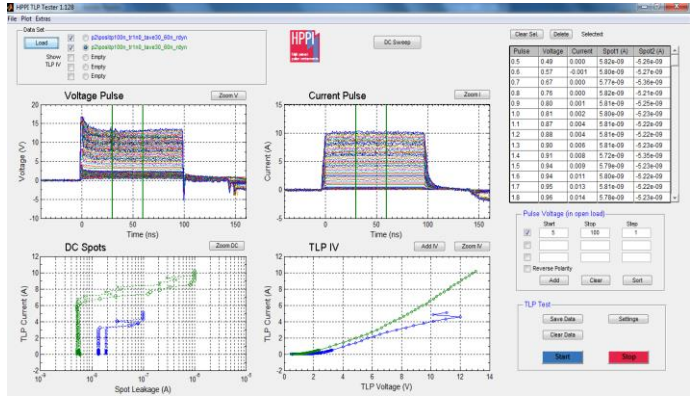

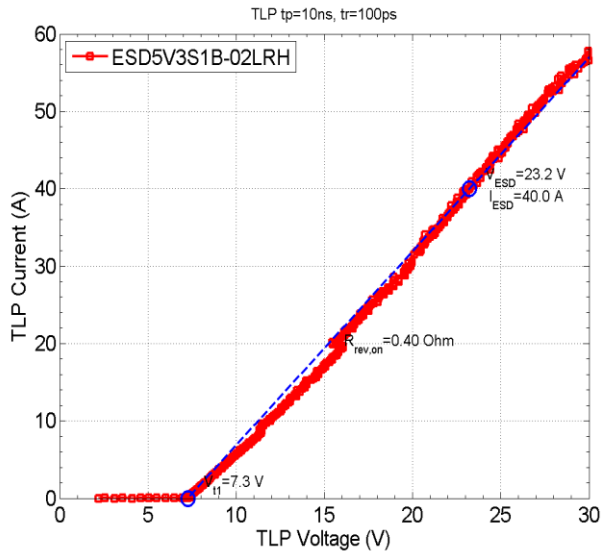

Copyright © Infineon Technologies AG 2021. All rights reserved.

Online Touch Points

Visit us online!

By product type

Coupler
BGCxxx

Antenna tuner
BGSAxxx

Antenna cross switch
BGSXxxx

RF switch
BGSxxx

Switch + LNA Module
BGMxxx

Low noise amplifier
BGAxxx

ESD1xx/2xx Series

TVS Protection:https://www.infineon.com/cms/en/product/esd-and-surge-protection/

Subscribe to Infineon Newsletter4Engineers!

Download our Application Guide
https://www.infineon.com/cms/en/product/rf-wireless-control/

Learn more on our webpage
www.Infineon.com/RF

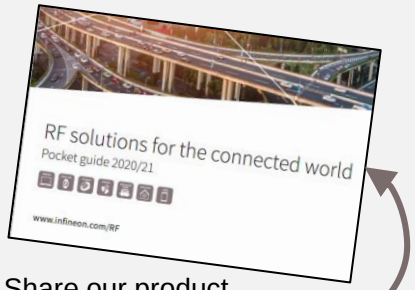

Share our product selection guide

By application

Notebook

Click here

Hearables

Connected Car

Smart Home

Sports watch

And more to come...

Copyright © Infineon Technologies AG 2021. All rights reserved.

英飞凌新一代智能穿戴应用解决方案

IoT Compute and Wireless

英飞凌 –IoT计算和无线连接芯片技术



Low Power ARM®-based MCUs

- PSoC6 series: Most-flexible, dual-core Arm Cortex-M4 and M0+ MCU

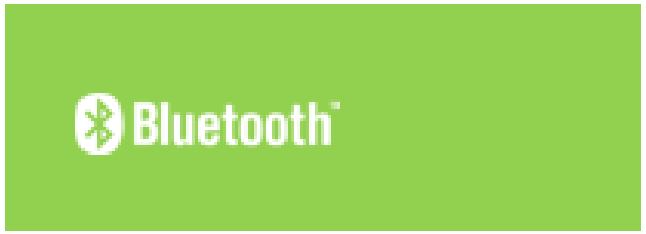

Bluetooth radio standards

- Bluetooth Classic (Basic Rate/Enhanced Data Rate)
- Bluetooth Low Energy (BLE)



Wi-Fi and Bluetooth radio combinations

- Wi-Fi (IEEE 802.11a/b/g/n , 802.11ac, 802.11ax)
- Wi-Fi and Bluetooth Combo

Copyright © Infineon Technologies AG 2021. All rights reserved.

英飞凌 – 可穿戴IoT计算和无线连接系统解决方案



Copyright © Infineon Technologies AG 2021. All rights reserved.

PSoC 6-BLE: 业内高集成度低功耗BLE SoC芯片方案

业内超低功耗和高集成度的BLE SoC芯片方案

- 双核架构ARM Cortex-M4/M0+和丰富的超低功耗模式，完美平衡低功耗与高性能最佳选择。
- 内部集成模拟电路运放及ADC，支持多路SPI/I2C/UART串行通讯接口，可以连接和控制多个传感器。
- 集成电容触控硬件单元及支持通用的显示屏，实现丰富的HMI人机交互体验。
- 支持空中下载(OTA)软件更新，低功耗蓝牙BLE及WiFi无线连接无缝同步到应用程序和云端服务。



ARM® Cortex®-M4 Usage Examples:

RTOS
Display
Sensor Analytics
Audio Interface
USB/BLE HCI

PSoC 6 Dual-Core MCU Architecture

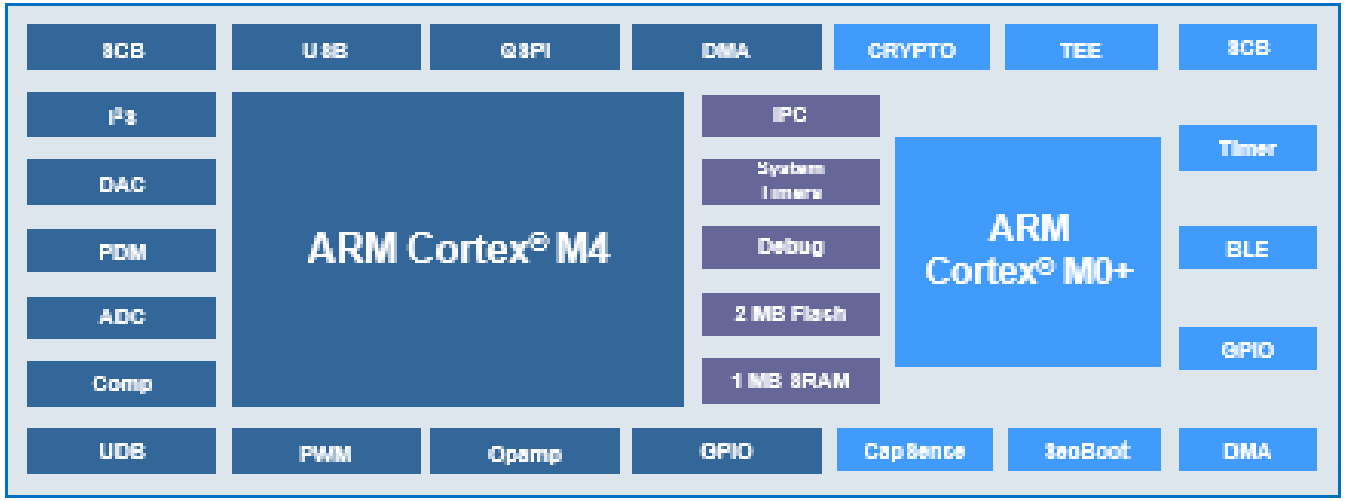

ARM Cortex®-M0+ Usage Examples:

BLE Stack
CapSense
Secure Functions
I/O Data Control
Sensor Aggregation

Copyright © Infineon Technologies AG 2021. All rights reserved.

低功耗蓝牙(BLE) 芯片 - PSoC6-BLE单芯片可穿戴方案

PSoC6-BLE方案特色

- Dual-core architecture ARM Cortex-M4 and M0+
- Features a high-performance 150-MHz ARM Cortex®-M4 CPU
- ARM Cortex®-M0+ as a low power core for sensor monitors
- Interfaces to multiple analog and digital sensors with I2C/SPI/UART
- Delivers CapSense® for reliable touch and proximity sensing
- Integrates a PDM-PCM digital microphone interface for voice solutions
- Integrates a low-power BLE 5.0 RF radio
- Support AMOLED and TFT-LCD Display
- Enables long battery life with an industry-leading, 22-µA/MHz power consumption in an active power mode
- Deliver a one-chip solution with 104-WLCSP small package

Smart Band & Smart Watch

PSoC 6 delivers an ultra-low-power, integrated solution for fitness trackers and smart watches



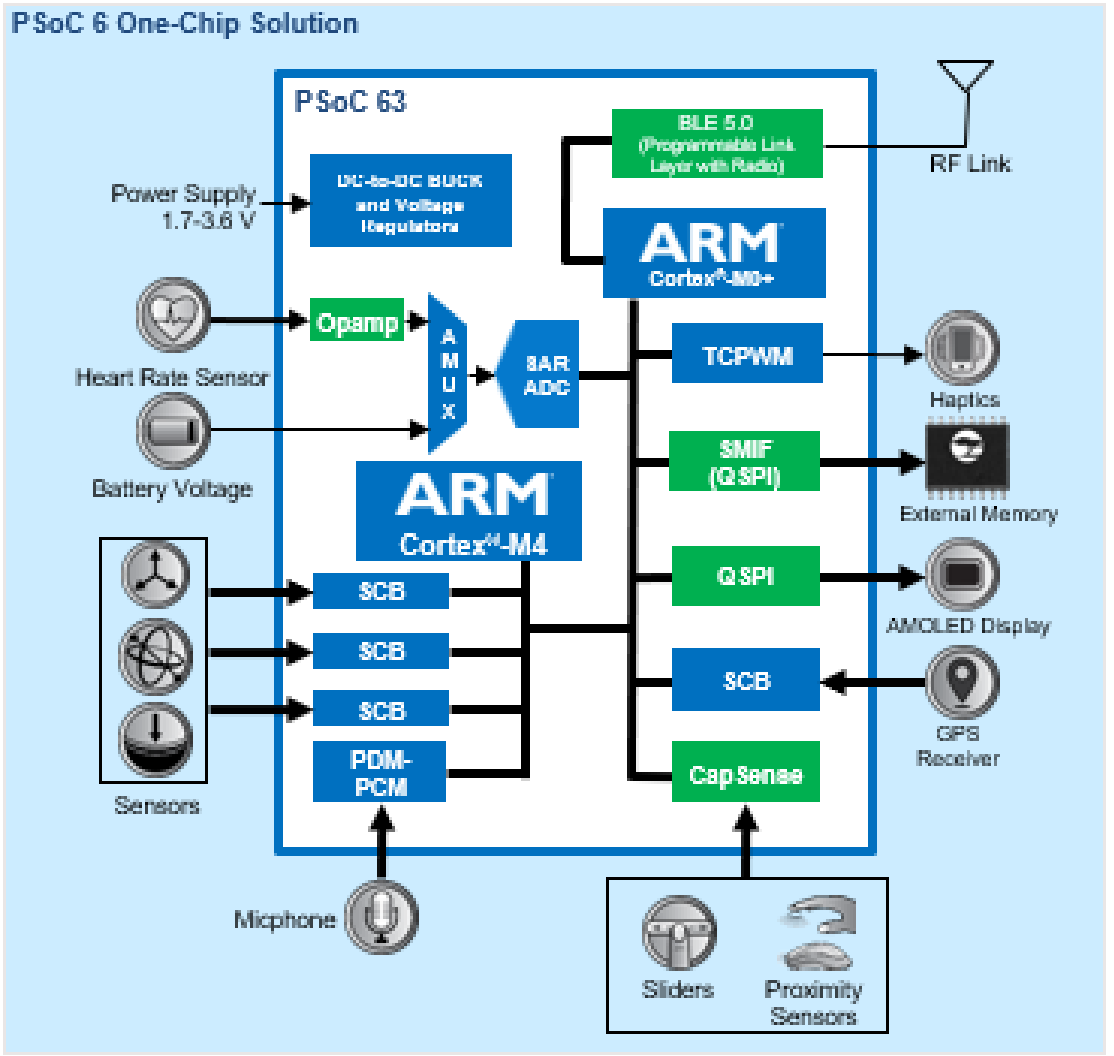

Copyright © Infineon Technologies AG 2021. All rights reserved.

双模蓝牙(经典蓝牙和低功耗蓝牙) - CYW20721 BT/BLE SoC

CYW20721蓝牙音频方案特色

- **MCU Subsystem**
  - 96-MHz ARM Cortex®-M4
  - 1MB Flash, 512KB SRAM, 2 MB ROM for stack and drivers
- **Bluetooth v5.0, Basic Rate + Enhanced Data Rate + Bluetooth Low Energy**
  - Industry's most widely deployed Bluetooth stack
  - Industry's lowest-power radio
    - Rx – 5.9 mA
    - Tx – 5.6 mA @ 0dBm
  - 2-Mbps LE support
  - Secure over-the-air (OTA) firmware upgrade
  - ECDH, AES
- **Bluetooth key features**
  - Integrates multiple peripherals for sensors
  - Integrates a low-power BLE 5.0/EDR radio
  - Integrates EDR for using standard headsets + A2DP
  - Integrates LE-2Mbps for LE2 based audio

A2DP + Bluetooth-Audio



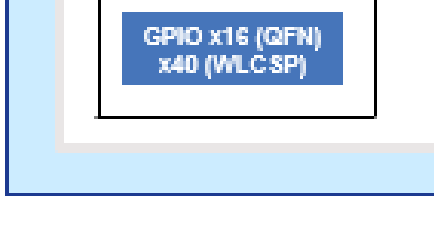

Copyright © Infineon Technologies AG 2021. All rights reserved.

CYW43012 Wi-Fi & Bluetooth Combo SoC

产品特色

- **Ultra-Low-Power Wi-Fi and Bluetooth Combo**
- **802.11n-compliant Wi-Fi**
  - Industry's most widely deployed Wi-Fi IP
  - Up to 72.2-Mbps data rate
  - Dual band (2.4/5 GHz) with on-chip power amplifiers and low-noise amplifiers for both bands
  - SDIO 3.0 interface (up to 50 Mbps)
- **Low-power 802.11ac compliance in 5 GHz**
  - 256-QAM support on 20-MHz channels in the 5-GHz band
  - MCS8 enables up to 78-Mbps data rate
- **Bluetooth 5.0 Compliant**
  - All Bluetooth 4.2 optional features and Bluetooth 5.0 2-Mbps LE data rate
  - Class 1 (100 m) and Class 2 (10 m) operation
  - Host controller interface (HCI)-over-UART

CYW43012: Dual-Band Wi-Fi and BT 5.0 Combo

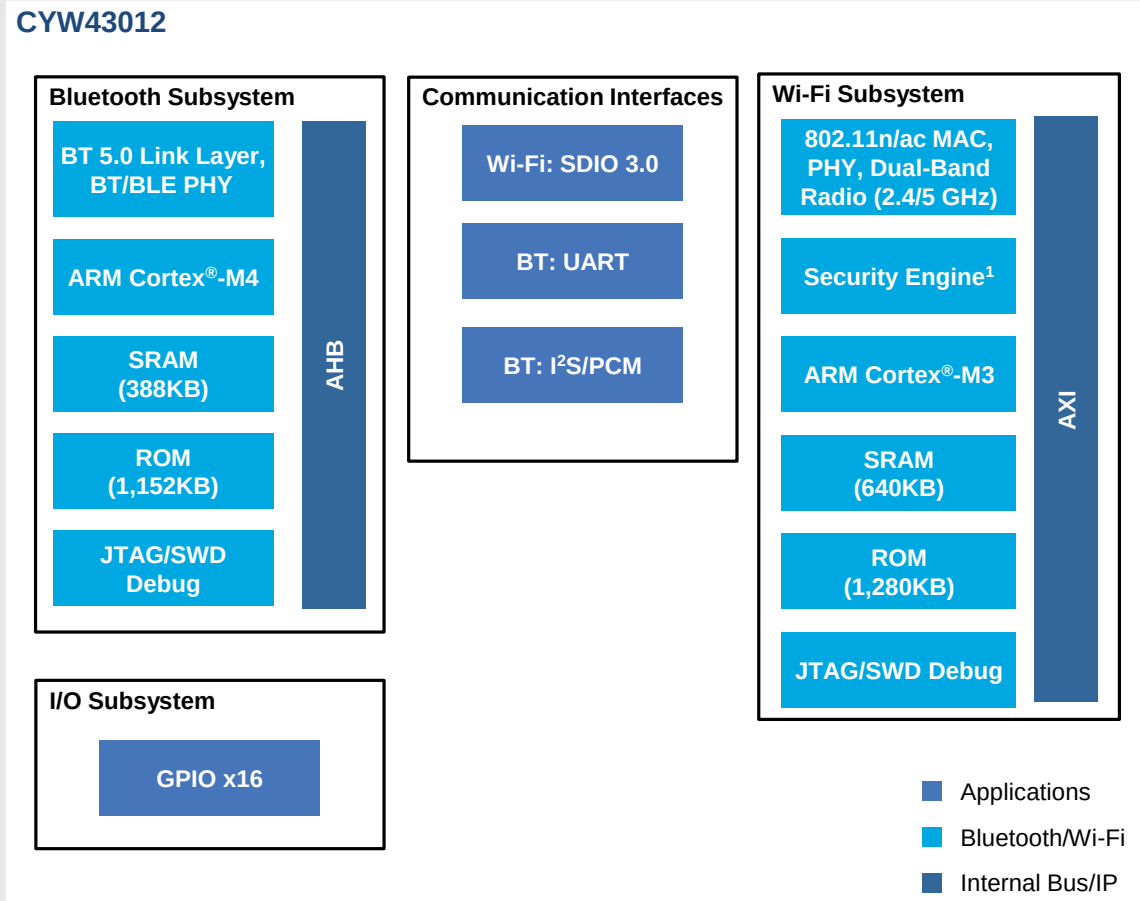

Copyright © Infineon Technologies AG 2021. All rights reserved.

CYW43012 ULP Wi-Fi + Bluetooth Combo

- ✔ **Ultra-low-power 28nm design ensures lowest power consumption in the industry**
- ✔ **IEEE 802.11a/b/g/n-compliant, 802.11ac-Friendly™ Wi-Fi**
  - Integrated IPv4/ IPv6 network stack on-chip
- ✔ **Dual-Mode Bluetooth 5.0**
  - Bluetooth host stack integrated on-chip, SDK for BLE Apps
- ✔ **Advanced coexistence engine for optimal combined Wi-Fi and Bluetooth performance**



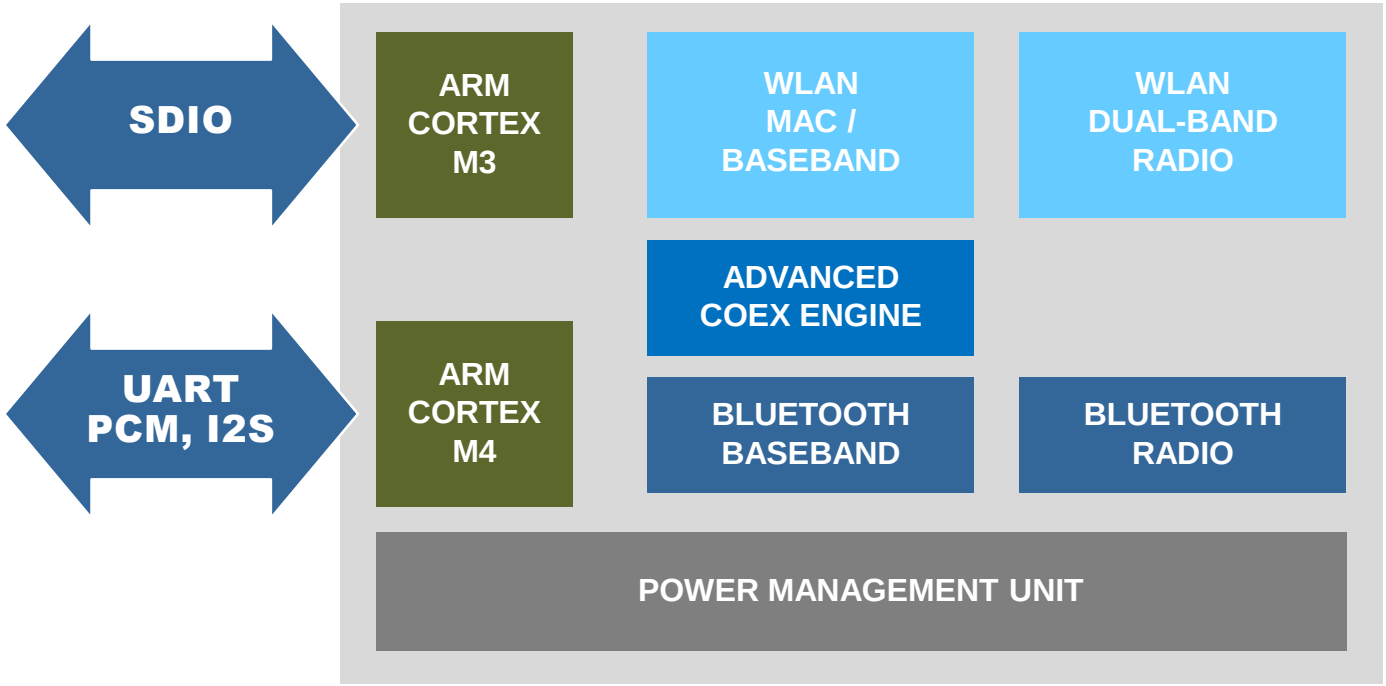

Copyright © Infineon Technologies AG 2021. All rights reserved.

CYW43012: MCU-Offload Low Power Wi-Fi Solution

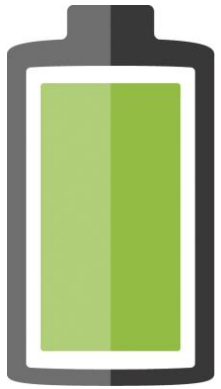



RECEIVE

50% ↓ power consumption than existing 40nm 802.11n products

70% ↓ power consumption than existing 40nm 802.11ac products



TRANSMIT

25% ↓ power consumption than existing 40nm 802.11n products



LOW POWER

80% ↓ Sleep power consumption than existing 40nm 802.11n products

50% to **60%** ↓ Idle & Ready Mode power consumption than existing 40nm 802.11n products

CYW43012 is the next-generation connectivity solution for IoT

Copyright © Infineon Technologies AG 2021. All rights reserved.

Infineon offering for dual-antenna BT/WiFi implementation using 2.4 and 5 GHz frequency band

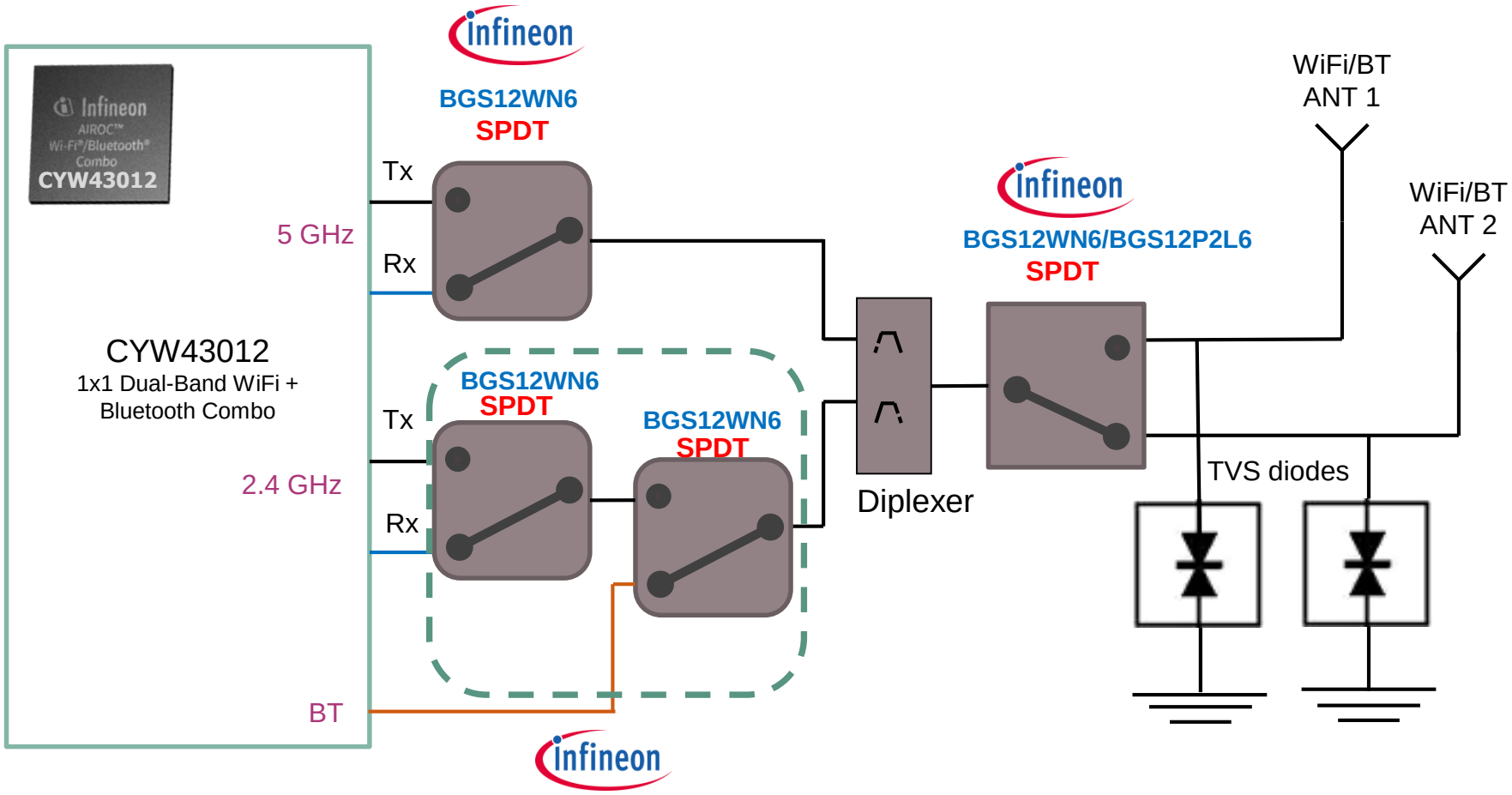

Infineon SPDT product
BGS12WN6

Infineon TVS product
ESD119-B1-W01005
ESD111-B1-W0201
ESD131-B1-W0201
ESD133-B1-W01005

Copyright © Infineon Technologies AG 2021. All rights reserved.

eSIM在可穿戴产品的应用

eSIM 适用于各种场景，机会多多

5G



Copyright © Infineon Technologies AG 2021. All rights reserved.

eSIM在消费类电子设备中的应用增长强劲

消费类电子设备

主设备：智能手机

辅助设备：
智能手表
平板电脑
笔记本电脑

内置eSIM的消费电子设备出货量

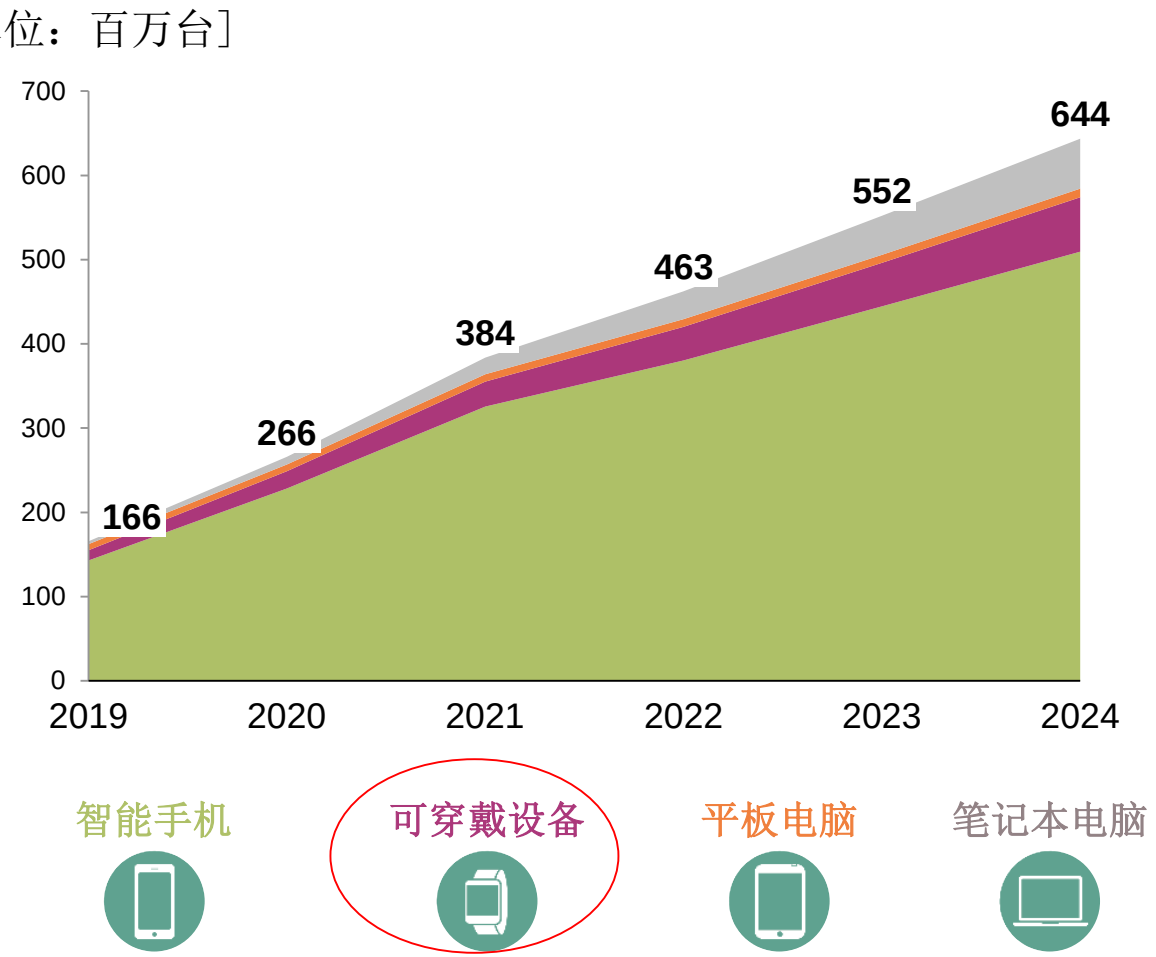

数据来源：ABI Research, https://go.abiresearch.com/lp-the-true-value-proposition-of-the-esim; ABI Research，《2020年第一季度eSIM在消费市场和M2M市场的表现》

Copyright © Infineon Technologies AG 2021. All rights reserved.

长远来看，eSIM将取代传统的**SIM**解决方案

- ✓ **SIM**(用户识别模块)卡的演变
- ✓ 将固定模块集成在设备之内，提供充分的设计灵活性
- ✓ 空中(**OTA**)进行码号的下载和切换
- ✓ 用户可灵活地选择移动网络运营商
- ✓ 让物联网设备的供应链管理更方便更容易



Copyright © Infineon Technologies AG 2021. All rights reserved.

OPTIGA™ Connect eSIM消费级应用解决方案



OPTIGA™ Connect Consumer
消费级应用

- 支持5G最新标准
- 可将消费类电子设备连接至全球各地的移动网络
- 符合**GSMA安全**评估
- 尺寸小巧：比**SIM卡小30倍**

Copyright © Infineon Technologies AG 2021. All rights reserved.

Empower smart wearables and IoT devices with payments and beyond

英飞凌借助全方位NFC安全应用赋予数字世界互联的支付功能



Established

NFC

支付

EMVCo

NFC

交通票证

EMVCo

Calypso

cipurse

NRG

National standard

NFC

门禁

fido

cipurse

NRG

Other 3rd party apps



整体解决方案
支持被动式/主动式可穿戴应用

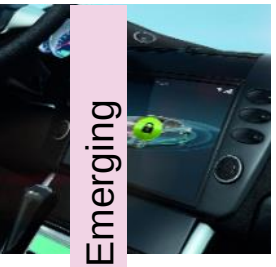

Emerging

在线安全支付

EMVCo



CARCONNECTIVITY consortium

汽车钥匙



加密货币 / 数字货币

Copyright © Infineon Technologies AG 2021. All rights reserved.

英飞凌基于硬件安全的整体NFC支付方案



- 基于NFC安全控制器且专注于智能可穿戴以及物联网器件的优化架构
- 支持不同的NFC安全应用，实现支付，票证以及门禁等应用案例
- 面向海外EMV市场推出SECORA™ Connect 整体方案，契合市场需求应对多卡片及单卡片应用
- 硬件支持未来创新应用： NFC充电及智能车钥匙等



交钥匙方案 (卡模拟)	低功耗 增加电池供电时间	小尺寸 易于高度集成	无缝升级换代
交钥匙方案 硬件+软件	提高能效	便于流畅设计	快速应对市场
Certified OS System-on-Chip mastercard VISA DISCOVER AMERICAN EXPRESS Calypso cipurse fido	优化架构带来低待机功耗 天线设计同时可支持NFC充电	SMD封装 小尺寸 灵活性	整合PSoC的评估套件 合作伙伴的系统接入服务支持

Copyright © Infineon Technologies AG 2021. All rights reserved.

英飞凌知乎账号 & MyInfineon

英飞凌知乎账号



Copyright © Infineon Technologies AG 2021. All rights reserved.

注册 myInfineon，您能够....

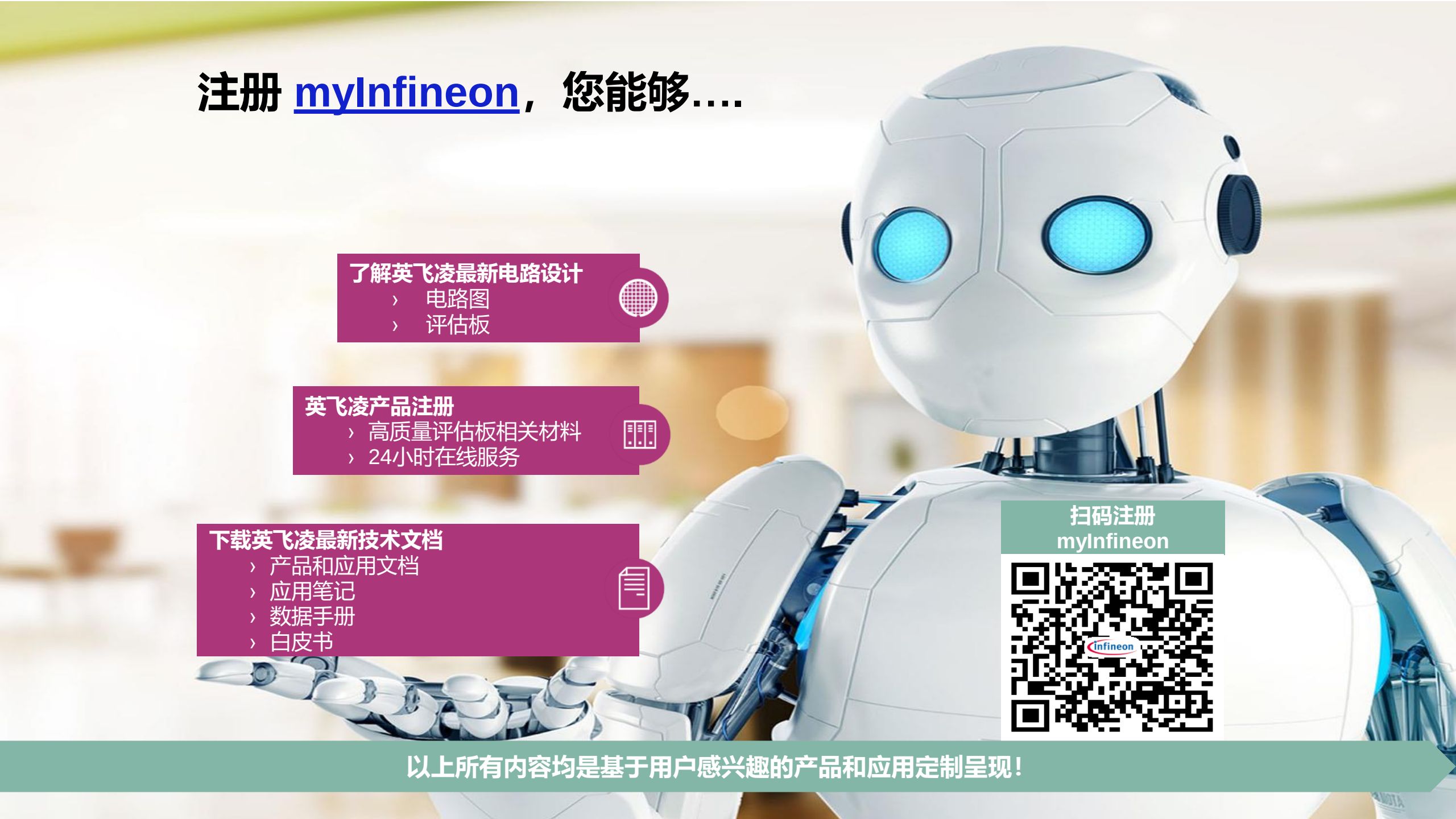

了解英飞凌最新电路设计
- 电路图
- 评估板

英飞凌产品注册
- 高质量评估板相关材料
- 24小时在线服务

下载英飞凌最新技术文档
- 产品和应用文档
- 应用笔记
- 数据手册
- 白皮书

扫码注册 myInfineon

以上所有内容均是基于用户感兴趣的产品和应用定制呈现！



Part of your life. Part of tomorrow.