Diaphragm seal for food/pharmaceutical/biotechnology
HYGIENIC Tubus Ø 76 mm with clamping flange, Type Series DL81 . .



Features

- Flush-mounted separating diaphragm of stainless steel, welded by laser
- Volume optimized diaphragm base
- Available with loose and fixed clamping flange
- Connection of measuring instrument:
  · directly welded
  · directly screwed
  · with temperature decoupler
  · with capillary

Options

- Material certificate acc. to DIN EN 10204-3.1
- Hygienic design with advanced surface quality
- With reduced temperature effect and reinforced diaphragm (LTC-technology)
- Special materials upon request

Application area

· Food industry
· Pharmaceutical industry
· Biotechnology

Application

Suitable for mounting to bourdon tube pressure gauges and pressure transmitters. The diaphragm seal HYGIENIC Tubus is used mainly for dead-zone free measuring.

Technical Data

Process connection
HYGIENIC Tubus Ø 76 mm with
· loose clamping flange, PN 16
· fixed clamping flange, PN 16

Diaphragm seal material
basic body:
st. steel mat. no. 1.4435 (316L) or Hastelloy C276
measuring instrument connection:
st. steel mat.no. 1.4301 (304)
clamping flange: st. steel mat. no. 1.4404 (316L)
gasket: EPDM, FDA listed

Separating diaphragm
material st. steel mat. no. 1.4435 (316L) or Hastelloy C 276, further materials upon request

Diaphragm outline
standard Sinus-type, option: with reduced temperature effect and reinforced diaphragm (LTC-technology)

Measuring instrument connection
· directly welded/screwed
· with temperature decoupler
· with capillary
see order code
material stainless steel

Process temperature
dependent on measuring system, diaphragm seal filling liquid and installation.

Temperature influence
Influence of process temperature to meas. system (when pressure transmitter is mounted):
· standard (Sinus-type): 0.8 mbar/10K
· LTC-technology: <0.4 mbar/10K

Diaphragm seal filling liquid
see data sheet D5-003.
Standard according to order code

Hygienic design
surface formation of wetted parts as per EHEDG guidelines
($R_a \leq 0.8$ µm)

Installation instructions
see operating instructions BTA-062

Weights
with measuring instrument connection approx. 0.8 kg

Measuring instrument connection

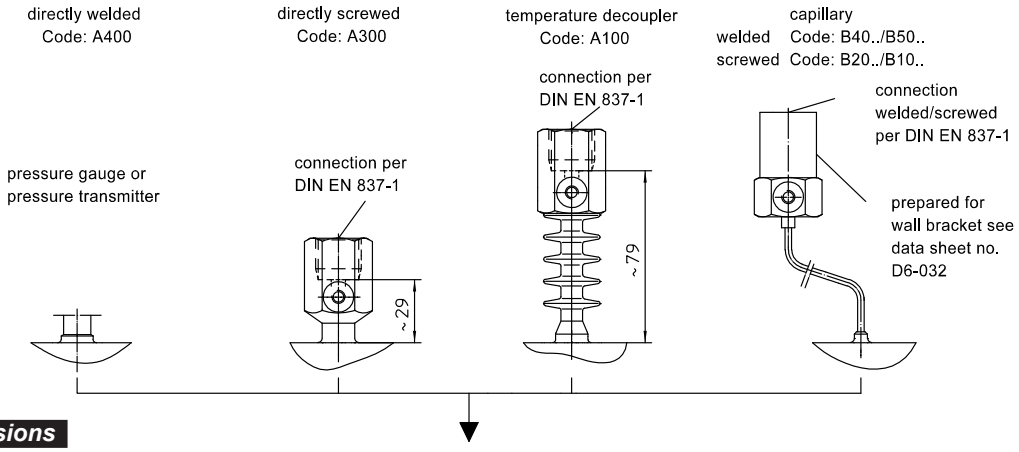

Dimensions

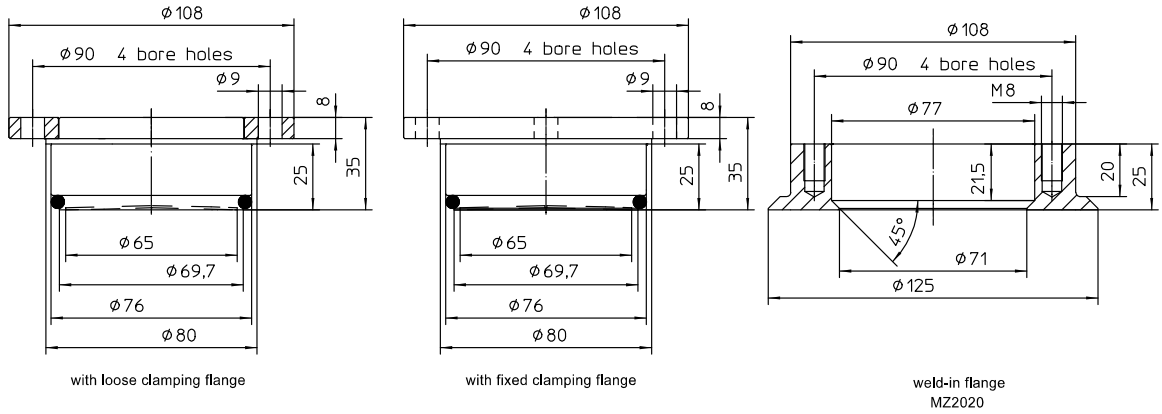

Order Details

- please give additional specifications for models not listed -

Diaphragm seal HYGIENIC Tubus with clamping flange			
design	HYGIENIC Tubus Ø 76 mm	· with loose clamping flange	**DL8120**
		· with fixed clamping flange	**DL8130**
surface roughness	· standard		
	· hygienic version as per EHEDG guidelines		**HY**
basic body material	· stainless steel mat.no. 1.4435 (316L)		**E7**
	· Hastelloy C276		**E3**
	· variant		**E9**
diaphragm material	· stainless steel mat.-no. 1.4435 (316L)		**G7**
	· stainless steel mat.-no. 1.4435 (316L), LTC membrane technology		**G7L**
	· Hastelloy C276		**G3**
gasket	· EPDM, FDA listed		**H2**
	· variant		**H9**
connection of measuring instrument	· directly	· welded	**A400**
		· screwed G 1/2	**A300**
	· with temperature decoupler A100	· screwed G 1/2	**A100**
	· with capillary	· welded	**B40 . .**
		· screwed G 1/2	**B20 . .**
	· with capillary and stainless steel protective tube	· welded	**B50 . .**
		· screwed G 1/2	**B10 . .**
system filling [1]	filling liquid	temperature range [2]	
	· foodstuff oil FD1 (standard)	+10...+140 °C	**L22**
	· foodstuff oil FD1, pls specify temperature, max.	-40...+200 °C	**L23**
	· glycerine/water FGW	-20...+120 °C	**L15**
additional features (to be indicated in case of need, only)			
material certificate acc. to DIN EN 10204- 3.1, wetted parts			**W1020**
diaphragm seal electropolished			**W4035**
order code (example):			**DL8120 HY E7 G7 H2 A100 L22**

capillary length	
length m	order-code
1	**11**
1.6	**12**
2.5	**13**
4	**14**
5	**21**
6	**15**
7	**23**
8	**16**
10	**17**
others	**9**

accessories

weld-in flange, stainless steel mat.-no. 1.4435 (316L), hygienic design	**MZ2020-E7**
hexagon screw M8x20 DIN 933, stainless steel mat.-no. 1.4301 (304)	**MZ8100-A11**

[1] Please check data sheet D5-003 for further information.
Please state temperature range to allow an accurate calculation of the system.

[2] max. temperature of liquid filling for abs. pressure > 1 bar

LABOM Mess- und Regeltechnik GmbH · P.O. Box 12 62 · 27795 Hude · Germany · Im Gewerbepark 13 · 27798 Hude · Germany
Tel. +49 4408 804-0 · Fax +49 4408 804-100 · e-mail: info@labom.com · www.labom.com