AC-Motoren GmbH

Data sheet for 3-Phase Squirrel Cage Motors

Motortype	FCA 112M - 4 / HE	IM B5 / IM 3001
	High Efficiency	



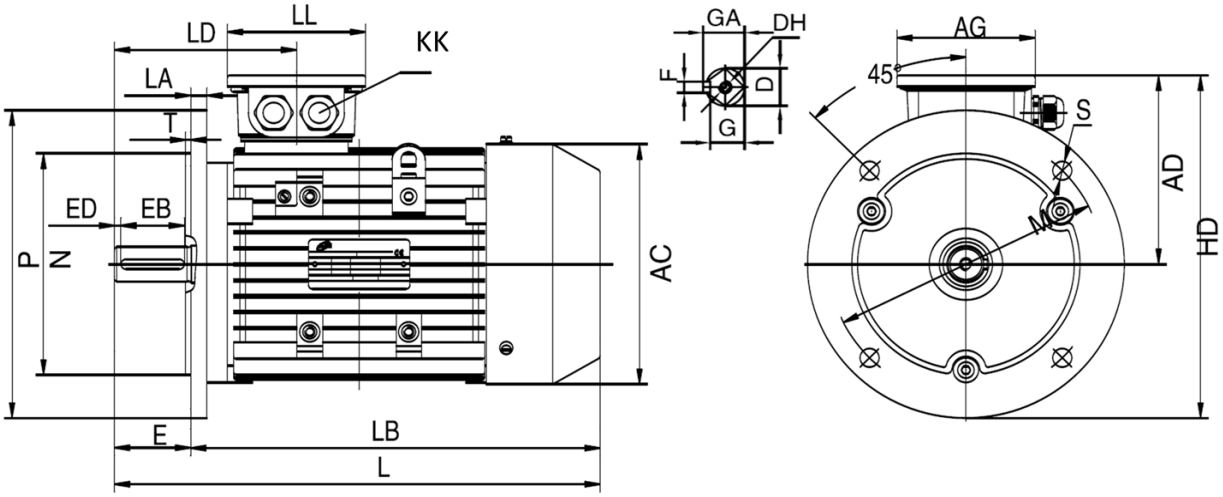

TYP	AC	AD	AG	D	DH	E	EB	ED	F	G	GA	HD	KK	L	LA	LB	LD	LL	M	N	P	S	T
112 M	219	169	117,5	28	M10X22	60	50	5	8	24	31	294	2-M32X1,5	401	14	341	152	117,5	215	180	250	14,5	4

Electrical datas

Rated motor power	**4,00 / 4,80**	KW 50 / 60 Hz
Rated motor speed	**1445**	min-1 / 50 Hz
	1734	min-1 / 60 Hz
Rated motor voltage	**400**	V Δ / 50 Hz
(+- 5%)	**690**	V Y / 50 Hz
	460	V Δ / 60 Hz
	795	V Y / 60 Hz
Rated motor torque	**26,4**	Nm (Mn)
Rated motor current 50Hz	**8,13 / 4,71**	A (In)
Rated motor current 60Hz	**8,48 / 4,91**	A (In)
Starting motor current	**7,6**	x In
Starting motor torque	**2,3**	x Mn
Breakdown motor tor.	**2,3**	x Mn
Efficiency	**86,6%**	by 100 % Load
	86,9%	by 75 % Load
	84,9%	by 50 % Load
Efficiency class	**IE2**	
Power factor at	**0,82**	by 100 % Load

Mechanical datas

Noise level	**53,0**	dB(A)
Moment of inertia	**0,00950**	Kgm²
Bearing A - Site	**6306.ZZ.C3**	
Bearing B - Site	**6306.ZZ.C3**	
Bearing lifetime	**20000 h**	by max Fr + Fx
max. Radialload (Fr)	**1914 N**	middle of shaft
max. Axialload (Fx)	**1440 N**	pull force
	1440 N	pressure force
Locating bearing	**loose**	Standard

Explosion protection

type of protection	**Without**

General datas

Frame size	**112 M**	
Type of construction	**IM B5 / IM 3001**	
Weight	**32,2**	kg
Frame material	**Aluminium**	
Protection	**IP 55**	
Insulation	**F utilized to B**	
Tropical insulation	**no**	
Vibration level	**A**	
Duty type	**S1**	
Direction of rotation	**bi-directional**	
Method of cooling	**IC 411**	
Cable entries	**2 x M32x1,5**	
Norm / Standards	**IEC / DIN / ISO / VDE / EN**	
Execute at	**IEC 60034 -1**	
Paintwork	**RAL 7030**	gray
Warranty	**12 month**	

Site conditions

Ambient temperature	**- 20 bis + 40**	°C
Altitude above sea level	**1000**	m over sea

Special configurations

Feet removeable

.
.
.
.
.
.
.
.
.
.
.
.

Technische Änderungen und Irrtümer vorbehalten / Technical modifications reserved, errors excepted

AC-MOTOREN GmbH, Einsteinstr. 17, D-64859 Eppertshausen, Tel. 06071-49887-0, Fax: 06071-49887-20,