JVC

INSTRUCTIONS

D-ILA PROJECTOR

DLA-VS2500ZG
DLA-VS2500G
DLA-VS2300ZG
DLA-VS2300G

BLU-Escent

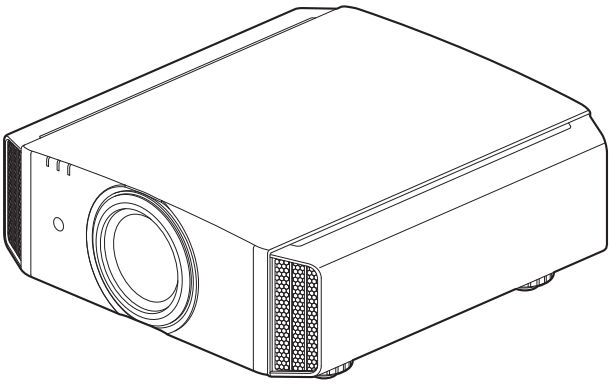

D-ILA®

HDMI®
HIGH-DEFINITION MULTIMEDIA INTERFACE

For Customer use :
Enter below the serial No. which is located on the back of the cabinet. Retain this information for future reference.

Model No. DLA-VS2500ZG
DLA-VS2500G
DLA-VS2300ZG
DLA-VS2300G

Serial No.

B5A-0626-20

Safety Precautions

IMPORTANT INFORMATION

WARNING:
TO PREVENT FIRE OR SHOCK HAZARDS, DO NOT EXPOSE THIS APPLIANCE TO RAIN OR MOISTURE.

WARNING:
THIS APPARATUS MUST BE EARTHED.

WARNING To DLA-VS2500ZG, VS2300ZG
REMOVE THE LENS COVER BEFORE TURNING ON THE PROJECTOR

CAUTION:
To reduce the risk of electric shock, do not remove cover. Refer servicing to qualified service personnel.

This projector is equipped with a 3-blade grounding type plug to satisfy FCC rule. If you are unable to insert the plug into the outlet, contact your electrician.

NOISE EMISSION DECLARATION
The sound pressure level at the operator position is equal or less than 50dB(A) according to ISO7779.

WARNING
This equipment is compliant with Class A of CISPR 32.
In residential environment this equipment may cause radio interference.

About the installation place

Do not install the projector in a place that cannot support its weight securely.
If the installation place is not sturdy enough, the projector could fall or overturn, possibly causing personal injury.

FCC INFORMATION (U.S.A. only)

CAUTION:
Changes or modification not approved by JVC could void the user's authority to operate the equipment.

NOTE:
This equipment has been tested and found to comply with the limits for a Class A digital device, pursuant to Part 15 of the FCC Rules. These limits are designed to provide reasonable protection against harmful interference when the equipment is operated in a commercial environment. This equipment generates, uses, and can radiate radio frequency energy and, if not installed and used in accordance with the instruction manual, may cause harmful interference to radio communications. Operation of this equipment in a residential area is likely to cause harmful interference in which case the user will be required to correct the interference at his own expense.

IMPORTANT SAFEGUARDS

Electrical energy can perform many useful functions. This unit has been engineered and manufactured to assure your personal safety. But IMPROPER USE CAN RESULT IN POTENTIAL ELECTRICAL SHOCK OR FIRE HAZARD. In order not to defeat the safeguards incorporated into this product, observe the following basic rules for its installation, use and service. Please read these Important Safeguards carefully before use.

- All the safety and operating instructions should be read before the product is operated.
- The safety and operating instructions should be retained for future reference.
- All warnings on the product and in the operating instructions should be adhered to.
- All operating instructions should be followed.
- Place the projector near a wall outlet where the plug can be easily unplugged.
- Unplug this product from the wall outlet before cleaning.
- Do not use liquid cleaners or aerosol cleaners. Use a damp cloth for cleaning.
- Do not use attachments not recommended by the product manufacturer as they may be hazardous.
- Do not use this product near water. Do not use immediately after moving from a low temperature to high temperature, as this causes condensation, which may result in fire, electric shock, or other hazards.
- Do not place this product on an unstable cart, stand, or table. The product may fall, causing serious injury to a child or adult, and serious damage to the product. The product should be mounted according to the manufacturer's instructions, and should use a mount recommended by the manufacturer.
- When the product is used on a cart, care should be taken to avoid quick stops, excessive force, and uneven surfaces which may cause the product and cart to overturn, damaging equipment or causing possible injury to the operator.

PORTABLE CART WARNING
(symbol provided by RETAC)

S3126A

- Slots and openings in the cabinet are provided for ventilation. These ensure reliable operation of the product and protect it from overheating. These openings must not be blocked or covered. (The openings should never be blocked by placing the product on bed, sofa, rug, or similar surface. It should not be placed in a built-in installation such as a bookcase or rack unless proper ventilation is provided and the manufacturer's instructions have been adhered to.)
- To allow better heat dissipation, keep a clearance between this unit and its surrounding as shown below. When this unit is enclosed in a space of dimensions as shown below, use an air-conditioner so that the internal and external temperatures are the same. Overheating can cause damage.

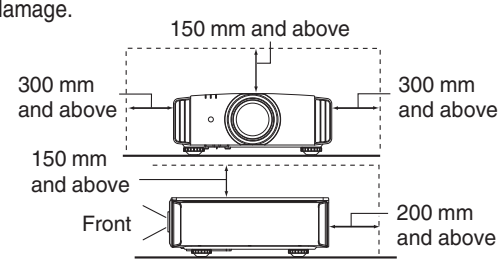

- Power source indicated on the label. If you are not sure of the type of power supply to your home, consult your product dealer or local power company.
- This product is equipped with a three-wire plug. This plug will fit only into a grounded power outlet. If you are unable to insert the plug into the outlet, contact your electrician to install the proper outlet. Do not defeat the safety purpose of the grounded plug.
- Power-supply cords should be routed so that they are not likely to be walked on or pinched by items placed upon or against them. Pay particular attention to cords at doors, plugs, receptacles, and the point where they exit from the product.
- For added protection of this product during a lightning storm, or when it is left unattended and unused for long periods of time, unplug it from the wall outlet and disconnect the cable system. This will prevent damage to the product due to lightning and power line surges.
- Do not overload wall outlets, extension cords, or convenience receptacles on other equipment as this can result in a risk of fire or electric shock.
- Never push objects of any kind into this product through openings as they may touch dangerous voltage points or short out parts that could result in a fire or electric shock. Never spill liquid of any kind on the product.
- Do not attempt to service this product yourself as opening or removing covers may expose you to dangerous voltages and other hazards. Refer all service to qualified service personnel.
- Unplug this product from the wall outlet and refer service to qualified service personnel under the following conditions:
  a) When the power supply cord or plug is damaged.
  b) If liquid has been spilled, or objects have fallen on the product.
  c) If the product has been exposed to rain or water.
  d) If the product does not operate normally by following the operating instructions. Adjust only those controls that are covered by the Operation Manual, as an improper adjustment of controls may result in damage and will often require extensive work by a qualified technician to restore the product to normal operation.
  e) If the product has been dropped or damaged in any way.
  f) When the product exhibits a distinct change in performance, this indicates a need for service.
- When replacement parts are required, be sure the service technician has used replacement parts specified by the manufacturer or with same characteristics as the original part. Unauthorized substitutions may result in fire, electric shock, or other hazards.
- Upon completion of any service or repairs to this product, ask the service technician to perform safety checks to determine that the product is in proper operating condition.
- The product should be placed more than one foot away from heat sources such as radiators, heat registers, stoves, and other products (including amplifiers) that produce heat.
- When connecting other products such as VCR's, and DVD players, you should turn off the power of this product for protection against electric shock.

- Do not place combustibles behind the cooling fan. For example, cloth, paper, matches, aerosol cans or gas lighters that present special hazards when over heated.
- Do not ceiling-mount the projector to a place which tends to vibrate; otherwise, the attaching fixture of the projector could be broken by the vibration, possibly causing it to fall or overturn, which could lead to personal injury.
- Use only the accessory cord designed for this product to prevent shock.
- Once every three years, please perform an internal test. This unit is provided with replacement parts needed to maintain its function (such as cooling fans). Estimated replacement time of parts can vary greatly depending on frequency of use and the respective environment. For replacement, please consult your dealer, or the nearest authorized JVC service center.
- When fixing the unit to the ceiling, Please note that we do not take any responsibility, even during the warranty period, if the product is damaged due to use of metal fixtures used for fixation to the ceiling other than our own or if the installation environment of said metal fixtures is not appropriate. If the unit is suspended from the ceiling during use, please be careful in regard to the ambient temperature of the unit. If you use a central heating, the temperature close to the ceiling will be higher than normally expected.
- Video images can burn into the electronic com ponent parts. Please do not display screens with still images of high brightness or high contrast, such as found in video games and computer programs. Over a long period of time it might stick to the picture element. There is no problem with the playback of moving images, e.g. normal video footage.

- Video images can burn into the electronic com ponent parts. Please do not display screens with still images of high brightness or high contrast, such as found in video games and computer programs. Over a long period of time it might stick to the picture element. There is no problem with the playback of moving images, e.g. normal video footage.
- Not using the unit for a long time can lead to malfunction. Please power it on and let it run occasionally. Please avoid using the unit in a room where cigarettes are smoked. It is impos sible to clean optical component parts if they are contaminated by nicotine or tar. This might lead to performance degradation.

*** DO NOT allow any unqualified person to install the unit.**

Be sure to ask your dealer to install the unit (e.g.attaching it to the ceiling) since special technical knowledge and skills are required for installation. If installation is performed by an unqualified person, it may cause personal injury or electrical shock.

- Do not use optical instruments (such as magnifying glass or reflector) viewing the laser output. It may pose an eye hazard.
- When turning on the projector, ensure that no one is looking into the projection lens.
- Do not look into the lens and openings when the light is on. Doing so would have serious effects on the human body.
- Do not detach or attach the projection lens with the power connected.
- Attempting to disassemble, repair or modify the projector yourself may lead to serious safety issues.
- Using a faulty product not only results in electrical shock or fire hazard, it can cause visual impairment.
- When abnormality occur, stop using the projector immediately and send it to your authorized dealer for repair.

CAUTION:
Use of controls or adjustments or performance of procedures other than those specified herein may result in hazardous radiation exposure.
This Projector is classified as a CLASS 2 LASER PRODUCT.
DO NOT STARE INTO BEAM .
This CLASS 2 LASER PRODUCT label and Caution label are located on the TOP Side surface of the projector.

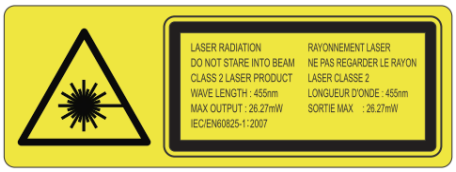

Location information of the labels

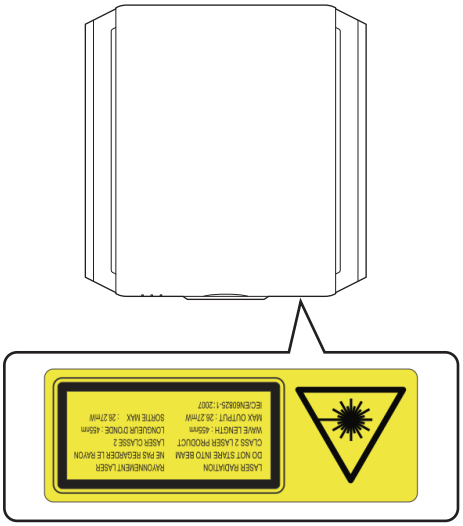

Light source specifications

30 W Laser diodes ×2
Wavelength 450-460 nm
Maximum output is 64.12 W

Beam divergence angle from lens of this unit

Wide: α=62.7°
Tele : α=33.5°

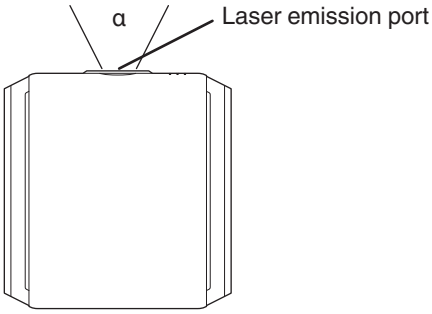

POWER CONNECTION

For USA and Canada only
Use only the following power cord.

Power cord

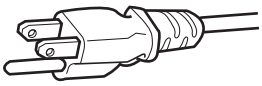

The power supply voltage rating of this product is AC110V – AC240V. Use only the power cord designated by our dealer to ensure Safety and EMC. Ensure that the power cable used for the projector is the correct type for the AC outlet in your country. Consult your product dealer.

Power cord

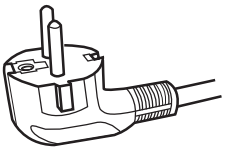

For European continent countries

WARNING:
Do not cut off the main plug from this equipment.

If the plug fitted is not suitable for the power points in your home or the cable is too short to reach a power point, then obtain an appropriate safety approved extension lead or adapter or consult your dealer. If nonetheless the mains plug is cut off, dispose of the plug immediately, to avoid a possible shock hazard by inadvertent connection to the main supply. If a new main plug has to be fitted, then follow the instruction given below.

WARNING:
THIS APPARATUS MUST BE EARTHED.

IMPORTANT (Europe only):
The wires in the mains lead on this product are colored Vert et jaune in accordance with the following cord:

Green-and-yellow	: Earth
Blue	: Neutral
Brown	: Live

As these colors may not correspond with the colored making identifying the terminals in your plug, proceed as follows:
The wire which is colored green-and-yellow must be connected to the terminal which is marked M with the letter E or the safety earth or colored green or green-and-yellow. The wire which is colored blue must be connected to the terminal which is marked with the letter N or colored black.
The wire which is colored brown must be connected to the terminal which is marked with the letter L or colored red.

Dear Customer,

This apparatus is in conformance with the valid European directives and standards regarding electromagnetic compatibility and electrical safety.

European representative of JVC KENWOOD Corporation is:
JVCKENWOOD Deutschland GmbH
Konrad-Adenauer-Allee 1-11
61118 Bad Vilbel
GERMANY

ENGLISH

Information on Disposal of Old Electrical and Electronic Equipment and Batteries (applicable for countries that have adopted separate waste collection systems)

Products and batteries with the symbol (crossed-out wheeled bin) cannot be disposed as household waste.
Old electrical and electronic equipment and batteries should be recycled at a facility capable of handling these items and their waste byproducts.
Contact your local authority for details in locating a recycle facility nearest to you.
Proper recycling and waste disposal will help conserve resources whilst preventing detrimental effects on our health and the environment.
Notice: The sign “Pb” below the symbol for batteries indicates that this battery contains lead.

DEUTSCH

Entsorgung von gebrauchten elektrischen und elektronischen Geräten und Batterien (anzuwenden in Ländern mit einem separaten Sammelsystem für solche Geräte)

Das Symbol (durchgestrichene Mülltonne) auf dem Produkt oder seiner Verpackung weist darauf hin, dass dieses Produkt nicht als normaler Haushaltsabfall behandelt werden darf.
Die betreffenden Produkte müssen an einer Annahmestelle für das Recycling von elektrischen und elektronischen Geräten und Batterien abgegeben werden.
Weitere Informationen über das Recycling dieses Produktes erhalten Sie von Ihrer Gemeinde oder den kommunalen Entsorgungsbetrieben.
Unsachgemäße oder falsche Entsorgung gefährden Umwelt und Gesundheit.
Zur Beachtung: Das Zeichen „Pb“ unter dem Symbol für Batterien zeigt an, dass diese Batterie Blei enthalt.

FRANÇAIS

Information sur l’élimination des anciens équipements électriques et électroniques et piles électriques (applicable dans les pays de qui ont adopté des systèmes de collecte sélective)

Les produits et piles électriques sur lesquels le pictogramme (poubelle barrée) est apposé ne peuvent pas être éliminés comme ordures ménagères.
Les anciens équipements électriques et électroniques et piles électriques doivent être recyclés sur des sites capables de traiter ces équipements et leurs déchets par produit.
Contactez vos autorités locales pour connaître le site de recyclage le plus proche.
Un recyclage adapté et l’élimination des déchets aideront à conserver les ressources et à nous préserver des leurs effets nocifs sur notre santé et sur l’environnement.
Avis: Le symbole “Pb” ci-dessous sur des piles électrique indique que cette pile contient du plomb.

NEDERLANDS

Informatie over het weggooien van oude elektrische en elektronische apparaten en batterijen (voor landen die gescheiden afvalverzamelsystemen gebruiken)

Producten en batterijen met het (afvalcontainer met x-teken) symbool mogen niet als normaal huisvuil worden weggegooid.
Oude elektrische en elektronische apparaten en batterijen moeten worden gerecycled door een faciliteit die geschikt is voor het verwerken van dergelijke voorwerpen.
Raadpleeg de betreffende lokale instantie voor details aangaande in de buurt zijnde recylingfaciliteiten.
Het juist recyclen en weggooien van afval spaart natuurlijke bronnen en reduceert schadelijke invloed op uw gezondheid en het milieu.
Opmerking: De ”Pb” aanduiding onder het batterijsymbool betekent dat deze batterij lood bevat.

ESPAÑOL / CASTELLANO

Información acerca de la eliminación de equipos eléctricos, electrónicos y baterías al final de la vida útil (aplicable a los países de la que hayan adoptado sistemas independientes de recogida de residuos)

Los productos y las baterías con el símbolo (contenedor con ruedas tachado) no podrán ser desechados como residuos domésticos.
Los equipos eléctricos, electrónicos y baterías al final de la vida útil, deberán ser reciclados en instalaciones que puedan dar el tratamiento adecuado a estos productos y a sus subproductos residuales correspondientes.

Póngase en contacto con la autoridad local competente para obtener información sobre el centro de reciclaje más cercano.
El reciclaje y la disposición adecuada de los desechos ayuda a conservar los recursos naturales y a reducir los efectos perjudiciales en la salud y el medio ambiente.
Nota: El símbolo “Pb” debajo del símbolo en baterías indica que dicha batería contiene plomo.

ITALIANO

Informazioni sull’eliminazione dei prodotti elettrici ed elettronici e delle batterie (per i Paesi che adottano la raccolta differenziata dei rifiuti)

I prodotti e le batterie recanti questa icona (bidone carrellato della spazzatura con il simbolo della croce) non devono essere eliminati come rifiuti solidi urbani.
I prodotti elettrici ed elettronici e le batterie devono essere riciclati presso centri idonei alla loro gestione e a quella dei rispettivi sottoprodotti.

Per informazioni sul centro di riciclaggio più vicino si suggerisce di rivolgersi alle autorità locali.
Se eseguiti adeguatamente, l’eliminazione e il riciclaggio dei rifiuti aiutano a conservare le risorse e al contempo impedire gli effetti nocivi sulla salute e l’ambiente.
Avviso: Il contrassegno “Pb” che appare sotto il simbolo delle batterie significa che contengono piombo.

Contents

Getting Started

Safety Precautions 2
Accessories/Optional Accessories 10
Check the Accessories 10
Optional Accessories 10
Controls and Features 11
Main Unit - Front 11
Main Unit - Bottom 11
Main Unit - Rear 12
Main Unit - Input Terminals 13
Remote control (sold separately, model no. RM-MH13G) 14
Loading Batteries into the Remote Control (Sold Separately) 15
Effective Range of Remote Control (Sold Separately) 15

Set up

Installing the Projector 16
Precautions during Installation 16
Precautions during Mounting 17
Adjusting the Position 18
Connecting the Projector 19
Connecting to the HDMI Input Terminal (Digital Input) 19
Connecting to the LAN Terminal 20
Connecting to the RS-232C Terminal 20
Connecting to the REMOTE Terminal 20
Connecting the Power Cord (Supplied Accessory) 21

Operate

Viewing Videos 22

Adjust/Set

Adjustments and Settings in the Menu 24
List of Menu Items 24
Picture Adjust 26
Input Signal 30
Installation 32
Display Setup 37
Function 38
Information 39

Maintenance

Maintaining the Cabinet and Remote Control (Sold Separately) 40
Cleaning and Replacing the Filter 41

Troubleshooting

Troubleshooting 42
When the following messages appear... 44

Others

External Control 45
RS-232C Specifications 45
TCP/IP Connection 45
Command Format 46
Remote Control Code 47
Communications Example 48
Specifications 49
Index 55

Symbols used in this manual

ZG indicates a function that is supported by DLA-VS2500ZG and DLA-VS2300ZG.

G indicates a function that is supported by DLA-VS2500G and DLA-VS2300G.

VS2500 indicates a function that is supported by DLA-VS2500ZG and DLA-VS2500G.

VS2300 indicates a function that is supported by DLA-VS2300ZG and DLA-VS2300G.

Items not marked with any of the above symbols are supported by all models.

Accessories/Optional Accessories

Check the Accessories

Power cord (for USA) (about. 2 m) ..... 1 piece

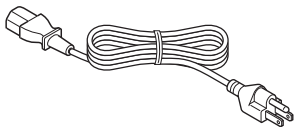

Power cord (for EU) (about. 2 m) ..... 1 piece

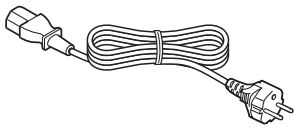

Optional Accessories

- Remote control: Model no. RM-MH13G

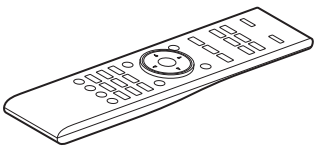

- AAA-size battery

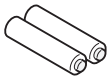

Controls and Features

Main Unit - Front

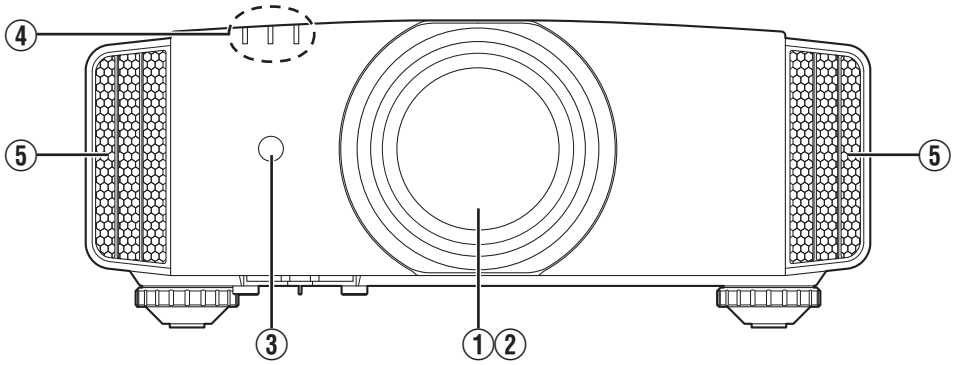

① Lens ZG

This is a projection lens. Do not look through the lens while an image is projected.

- For G, the lens is sold separately.

② Lens sheet ZG

The lens comes attached with a protective sheet when you purchase this product.

③ Remote Sensor (front)

Please aim the remote control (sold separately) at this area when using it.

* There is also a remote sensor at the rear.

④ Indicator

Refer to “Indicator Display on the Main Unit”p. 52.

⑤ Exhaust vent

Warm air is discharged to cool down the internal temperature.
Do not block the vents.

Main Unit - Bottom

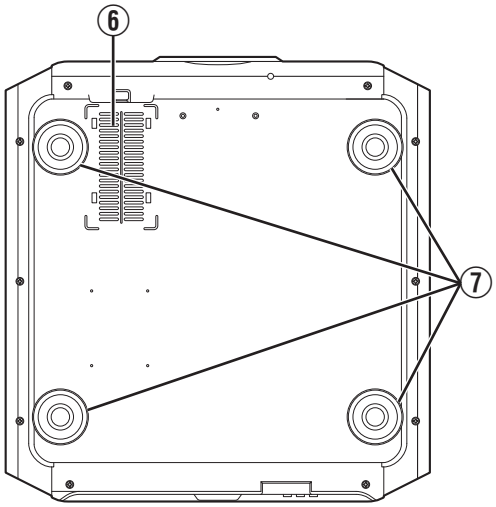

⑥ Inlets (at 3 points on the rear/bottom)

The inlets take in air to cool down the internal temperature.
Do not block or prevent the outflow of hot air. Doing so may cause the unit to malfunction.

* There are two inlets on the right and left sides at the rear of the unit.

⑦ Foot

The height and angle of the projector can be adjusted by turning the foot. (0 to 5 mm) (p. 18)

When the foot is removed, it can be used as the mounting hole to fix the unit on the base.

Main Unit - Rear

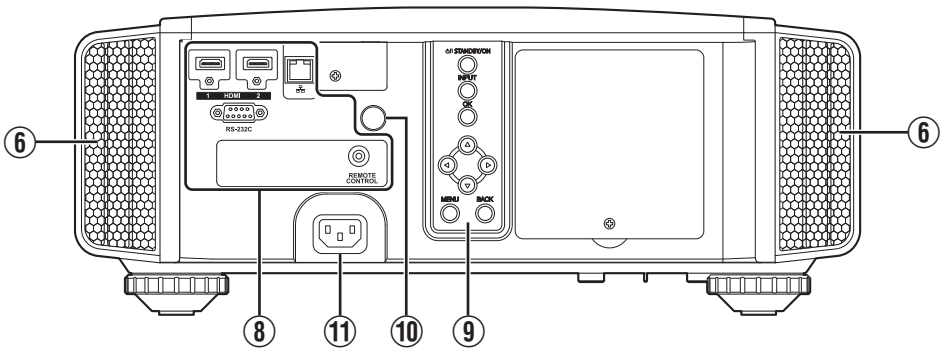

⑧ Input terminals

For details on the terminals. refer to “Main Unit - Input Terminals”p. 13.

⑨ Operation panel

For more details, please refer to the “Operation panel” in the diagram below.

⑩ Remote Sensor (rear)

Please aim the remote control (sold separately) at this area when using it.

* There is also a remote sensor at the front.

⑪ Power input terminal

Connect the supplied power cord to this terminal.

Operation panel

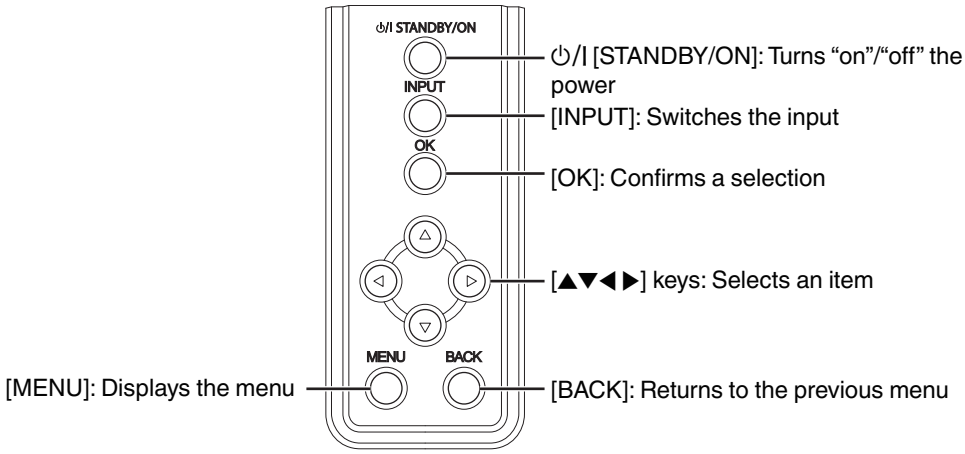

Main Unit - Input Terminals

Enlarged View of Rear Face

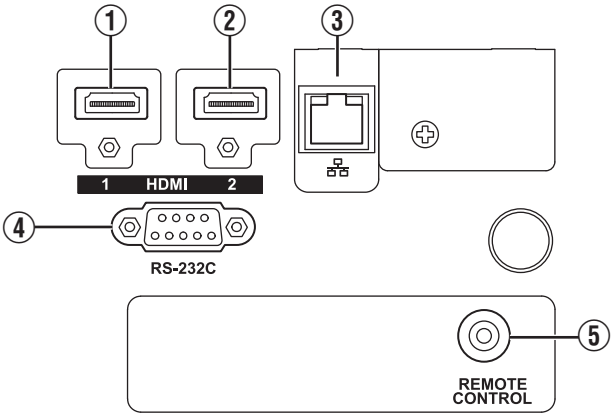

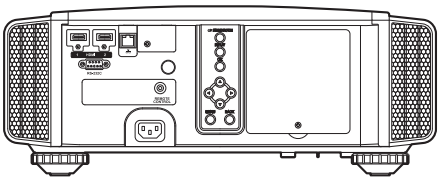

① [HDMI 1] input terminal

② [HDMI 2] input terminal

For connecting to devices that support HDMI output. (p. 19)

It is fitted to the M3 lock hole. The depth of the screw hole is 3 mm.

③ [LAN] terminal (RJ-45)

The projector can be controlled by connecting it to a PC through the computer network for control commands to be sent to the projector.

④ [RS-232C] terminal (D-sub 9-pin male)

The projector can be controlled by connecting a PC to this terminal.

⑤ [REMOTE] terminal (stereo mini jack)

This terminal is used to connect the remote control directly to the projector with the cable.

Remote control (sold separately, model no. RM-MH13G)

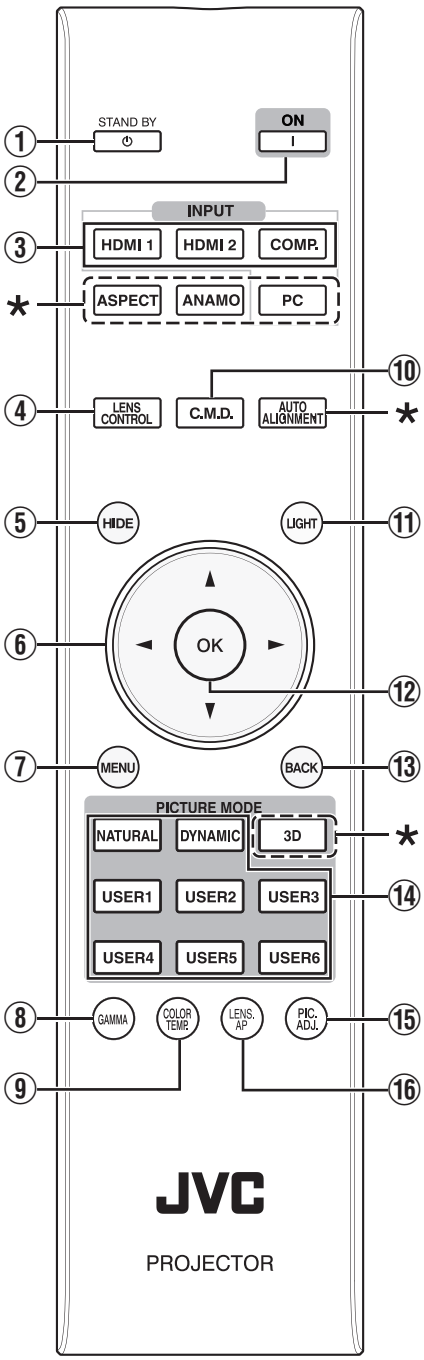

① ⏻ [STAND BY]

Turns off the power. (p. 23)

② I [ON]

Turns on the power. (p. 22)

③ [INPUT]

Select an input from [HDMI 1], [HDMI 2], and [Dual]. (p. 22)

* The Dual function is available only on VS2500.

④ [LENS CONTROL] ZG

For adjusting focus, zoom, and shift. (p. 32)

⑤ [HIDE]

Hides the image temporarily. (p. 22)

⑥ [▲▼◀▶] keys

For selecting an item.

⑦ [MENU]

Displays the menu, or hides the menu if it is displayed.

⑧ [GAMMA]

For setting the gamma level. (p. 28)

⑨ [COLOR TEMP]

For setting the color temperature. (p. 28)

⑩ [C.M.D.]

For setting frame interpolation. (p. 29)

⑪ [LIGHT]

Illuminates the buttons on the remote control.

⑫ [OK]

Confirms a selected item.

⑬ [BACK]

Returns to the previous menu.

⑭ [PICTURE MODE]

Switches the Picture mode to [NATURAL], [DYNAMIC], [USER1] to [USER6]. (p. 26)

⑮ [PIC. ADJ.]

Switches the items for adjusting the image quality, such as contrast, brightness, etc. (p. 29)

⑯ [LENS AP.] ZG

For setting the lens aperture.

CAUTION

- Buttons indicated with a * mark are not usable on this unit.
  However, the [LENS AP.] and [PIC. ADJ.] buttons can be used during pixel adjustment.

Loading Batteries into the Remote Control (Sold Separately)

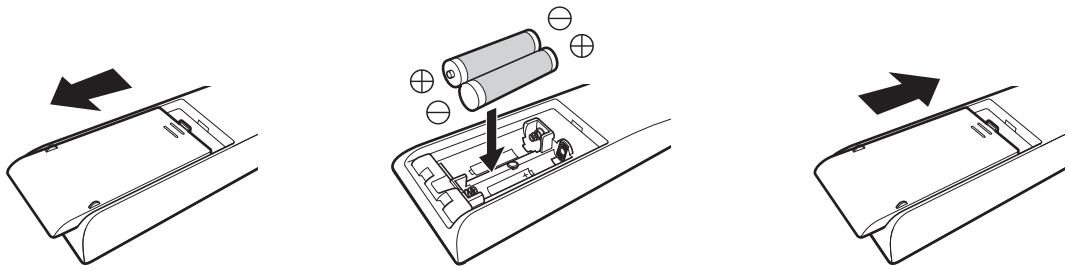

- If the remote control has to be brought closer to the projector to operate, it means that the batteries are wearing out. Replace the batteries with new ones (AAA).
- Insert the batteries according to the ⊕ ⊖ marks. Be sure to insert the ⊖ end first.
- If an error occurs while using the remote control, remove the batteries and wait for five minutes. Load the batteries again and operate the remote control.

Effective Range of Remote Control (Sold Separately)

When aiming the remote control toward the sensor on this unit (front or rear), ensure that the distance to the sensor is within 7 m.
If the remote control fails to work properly, move closer to this unit.

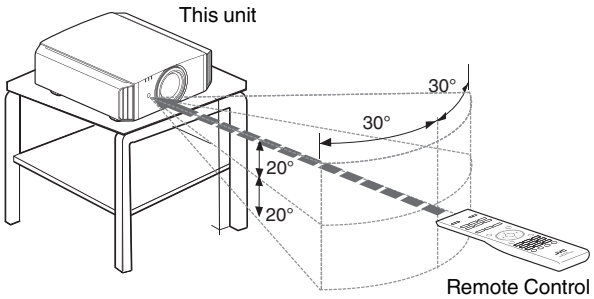

Control through reflection off a screen, etc.

Ensure that the total of distance A (between this unit and the screen) and distance B (between the remote control and the screen) is within 7 m.

* As the efficiency of signals reflected from the remote control unit varies with the type of screen used, the operable distance may decrease.

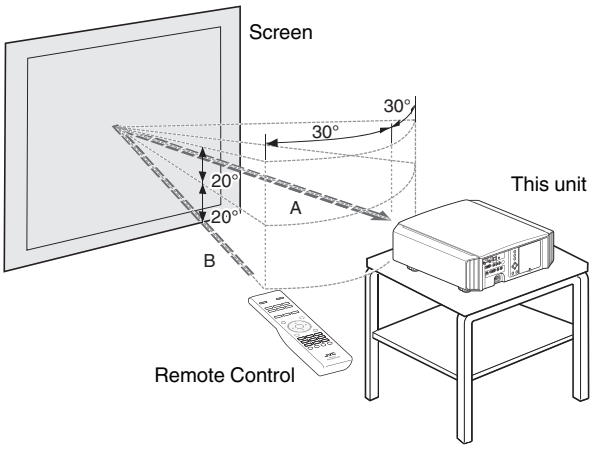

CAUTION

- Do not put the remote control in a place with an exposure to direct sun light or high temperature.

Installing the Projector

Precautions during Installation

Please read the following carefully before installing this unit.

Do not install at the following locations

This unit is a precision device. Please refrain from installing or using it at the following locations. Otherwise, it may cause fire or malfunction.

- Dusty, wet and humid places
- Places subject to oily smoke or cigarette smoke
- On top of a carpet or bedding, or other soft surfaces
- Places exposed to direct sunlight
- Places with a high or low temperature
- Do not install this unit in a room that is oily or subject to cigarette smoke. Even a small quantity of smoke or oiliness can have a long-term impact on this unit.

* This unit produces a great amount of heat, and is designed to take in cool air to cool its optical components. Using the unit at the above locations may cause dirt to attach to the light path, thereby resulting in dark images or dull colors.

* Dirt that sticks to the optical components cannot be removed.

Maintain clearance from the wall, etc.

As the unit discharges a large amount of heat, install it with adequate clearance from the surroundings as shown below.

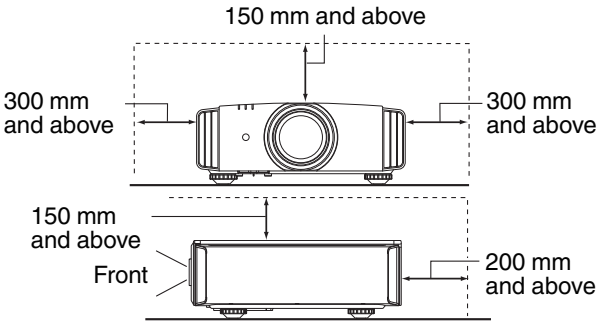

Leave the front area of the unit unblocked.
If there is any obstructing object in front of the exhaust vent, hot air will flow back to the unit and cause it to heat up. Hot air flowing out of the unit may cast shadows on the screen (heat haze phenomenon).

Using the projector

There is no particular limitation on the positioning of the projector during installation.
You can install at your preferred angle.

Installing the screen

Install the unit and the screen such that they are perpendicular to each other.

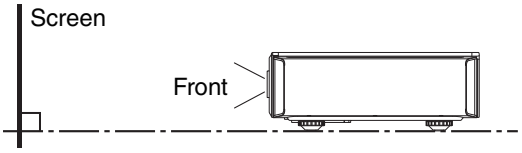

- Please choose a screen material with non-uniform patterns. Uniform patterns such as checks may cause interference patterns to occur.
- In this case, you can change the size of the screen to make the interference patterns less noticeable.

Precautions during lens attachment G

When attaching the lens, remove the Light Guard before attaching the lens.

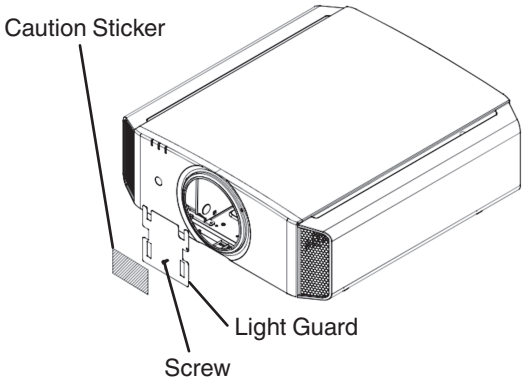

Precautions during Mounting

Securing (mounting) the projector

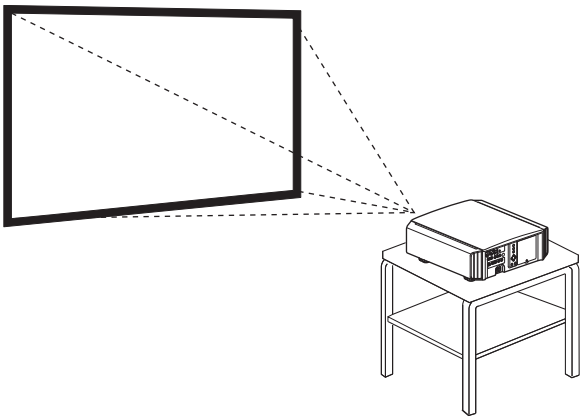

- Make sure to secure the main unit to prevent accidents such as during an earthquake.

Securing with screws

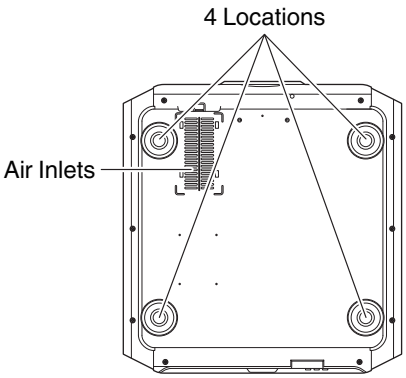

Remove the foot (x4) at the bottom, and fasten using the screws (M5 screws, 13 to 23 mm).

* Using screws other than those designated may cause the unit to break down.

* Leave a clearance of at least 10 mm from the bottom surface of the unit to allow it to take in cool air.

Securing the projector (ceiling mount)

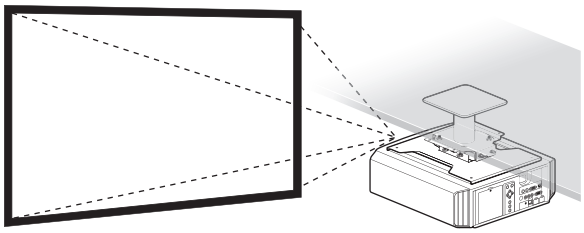

- Be sure to ask your dealer to install the unit for you. Installing the unit on your own may cause the unit to fall resulting in injury.
- Take the necessary actions to prevent the main unit from falling off such as during an earthquake.
- Regardless of the warranty period, JVC is not liable for any product damage caused by mounting the unit with non-JVC ceiling fittings or to an environment that is not suited for ceiling mount.
- When using the unit with it suspended from a ceiling, pay attention to the surrounding temperature. When a heater is in use, the temperature around the ceiling may be higher than expected.
- To attach the unit to the ceiling mount bracket, set the torque between the range of 1.5N m to 2.0N m. Tightening with torque exceeding the above range may cause damage to the unit, which may result the unit to fall.

Adjusting the Position

Adjusting the elevation angle of the projector

The height and inclination of the unit (0 to 5 mm) can be adjusted by turning the foot.
Lift the unit and adjust the foot (x4).

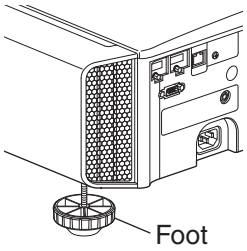

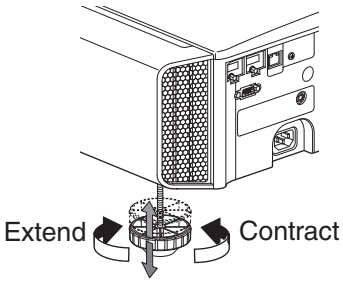

Adjusting the position of the image

By using the lens shift feature of this unit, you can shift the image upward/downward or to the left/right. Set it to your preferred position.

■ Horizontal Position

Vertical Position: 0% (Center)

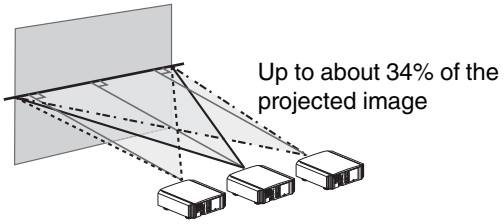

■ Vertical Position

Horizontal Position: 0 % (Center)

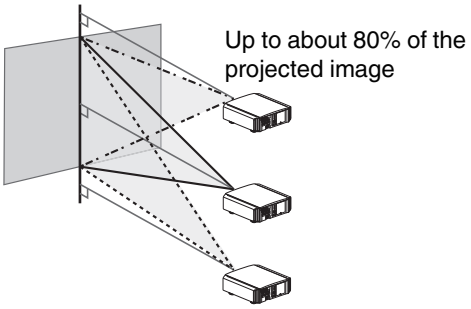

■ Lens shift Range

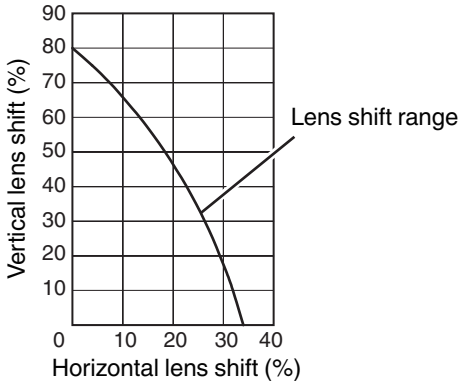

- The maximum vertical shift varies with the amount of horizontal shift. Similarly, the maximum horizontal shift also changes with the amount of vertical shift.
- The values on the graph are intended as a guide. Use them for reference during installation.
- To adjust the screen position, it is recommended to wait till the position becomes stable after projection before adjusting. The position may changed after projection depending on the attitude of the projector.

Connecting the Projector

- Do not turn on the power until connection is complete.
- The connection procedures differ according to the device used. For details, please refer to the instruction manual of the device to be connected.
- This projector is used for projecting images. To output the audio of connected devices, please connect a separate audio output device, such as an amplifier or speaker.
- The images may not be displayed depending on the devices and cables to be connected.
  Use only HDMI cables (sold separately) that are HDMI-certified.
- Some cables cannot be connected to this unit due to the size of their connector cover.

Connecting to the HDMI Input Terminal (Digital Input)

Connecting via HDMI cable

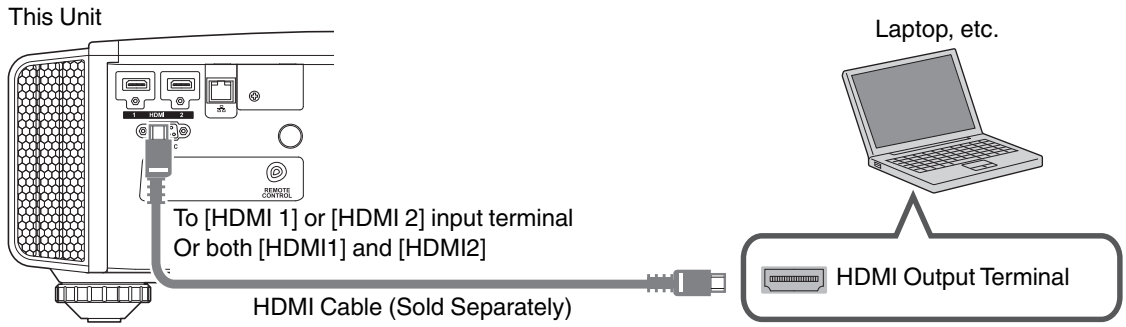

- If noise occurs, move the laptop away from this unit.
- For a transmission bandwidth in compliance with the HDMI standard, a cable which supports 340 MHz bandwidth is recommended.
- If the video is not displayed, try to reduce the length of the cable.

Connecting via HDMI-DVI conversion cable

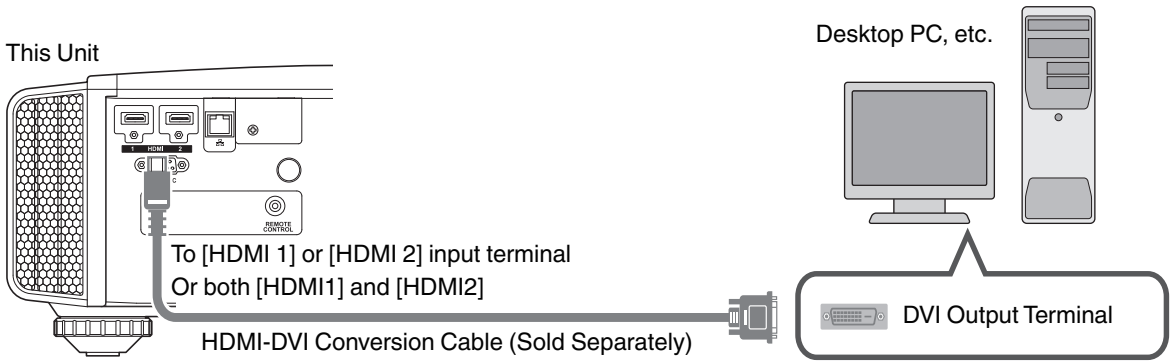

- If noise occurs, move the desktop PC away from this unit.
- If the video is not displayed, try to reduce the length of the cable.

Connecting to the LAN Terminal

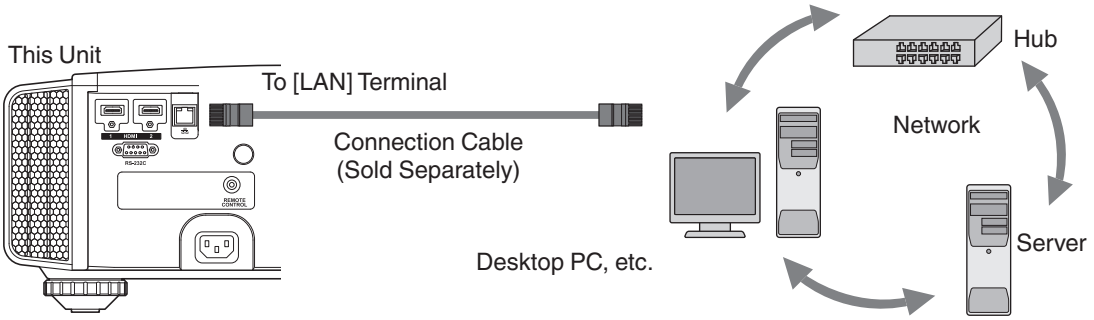

- The network is used to control this unit. It is not used for sending or receiving video signals.
- Please contact your network administrator for information concerning the network connection.
- For more information on control, please refer to “External Control” (p. 45).

Connecting to the RS-232C Terminal

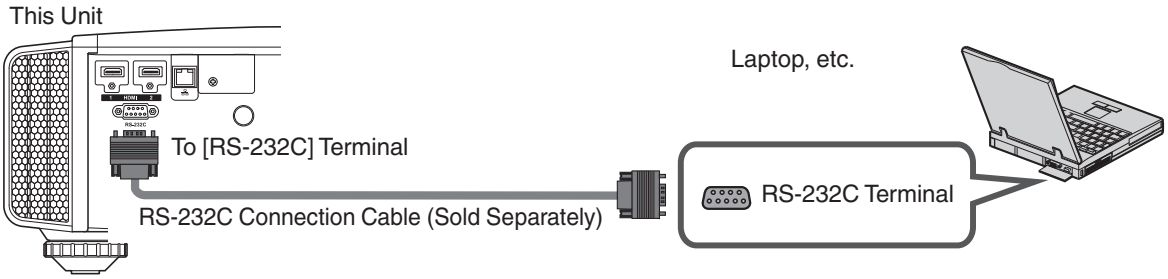

- For more information on control, please refer to “External Control” (p. 45).

Connecting to the REMOTE Terminal

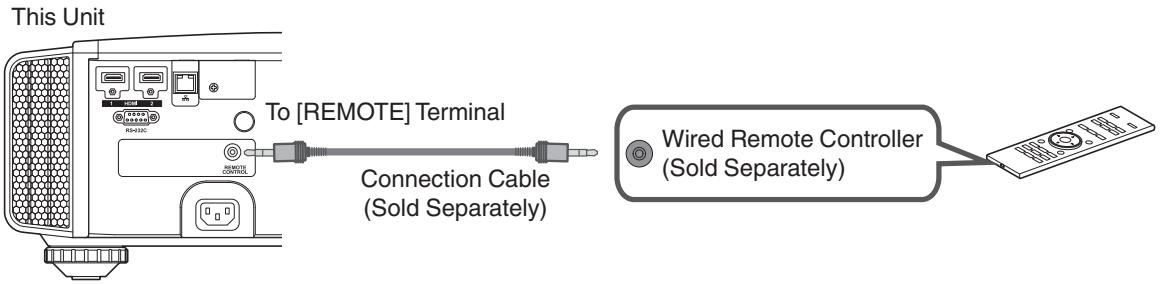

- For more details on the wired remote controller and connection cable, please consult your dealer.

Connecting the Power Cord (Supplied Accessory)

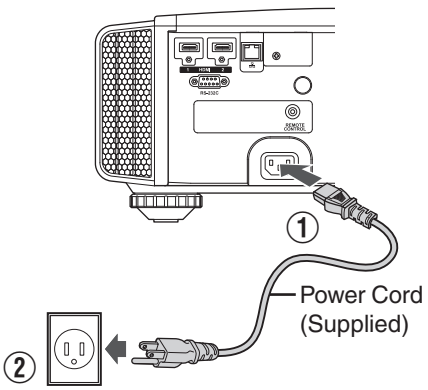

① Connect the power cord supplied to the power input terminal on the main unit

② Insert the supplied power plug into the wall outlet.

Precautions to prevent fire and electric shock

- The power consumption of this unit is large. Please connect it directly to the wall outlet.
- Pull out the power plug when the unit is not to be used for a prolonged period of time.
- Connect it using only the power cord supplied.
- Do not use a voltage other than the indicated power voltage.
- Do not damage, break or modify the power cord. Do not place a heavy object on the power cord, or heat or pull it. Doing so may damage the power cord.
- Do not unplug the power cord with wet hands.

Viewing Videos

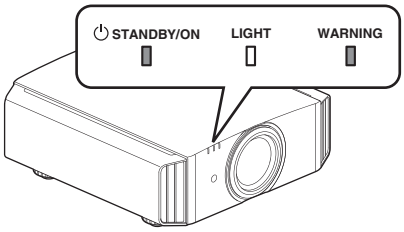

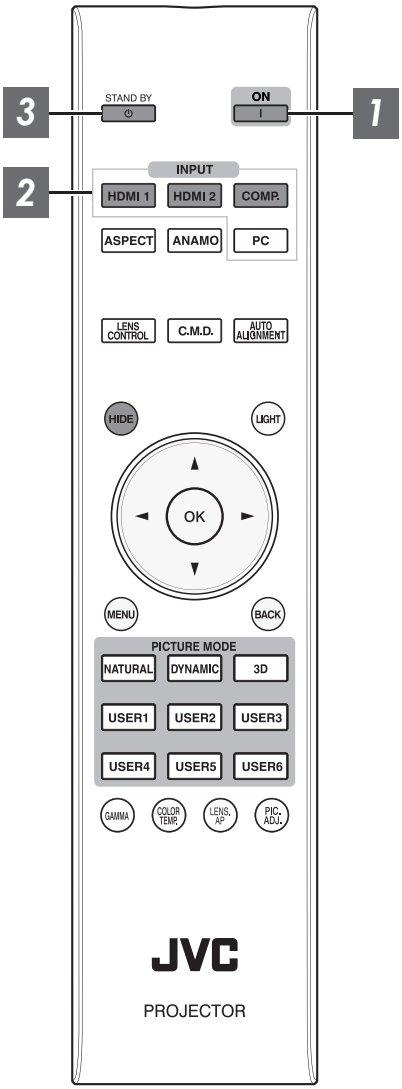

MEMO

- When you are using this unit, be sure to remove the lens sheet. ZG
- Connect the power cord, and ensure that the “STANDBY/ON” indicator lights up in red.

1 Turn on the power

Projector unit: press the ⏻/I [STANDBY/ON] button

Remote control (sold separately): press the I [ON] button

- The “STANDBY/ON” indicator light switches from red to green (light goes off after the unit starts up).

“STANDBY/ON” lights up (red)
In standby state

“STANDBY/ON” lights up (green)
During laser light source startup

2 Choose the image to project

Projector unit: press the [INPUT] button (pressing the button each time switches the mode)

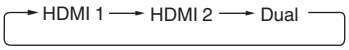

Remote control (sold separately):

Button	Terminal
[HDMI 1]	HDMI1
[HDMI 2]	HDMI2
[COMP.]	Dual

- Play back the selected device to project the image.

* The Dual function is available only on VS2500.

To hide the image temporarily

Press the [HIDE] button on the projector unit or remote control (sold separately)

- The “STANDBY/ON” indicator light starts to blink in green. When “LED Indication” is set to “Off”, the indicator does not blink.
- Press the [HIDE] button again to resume display of the image.
- The power cannot be turned off when the image is temporarily hidden.

Operate

3 Turn off the power

Projector unit: press the ⏻/I [STANDBY/ON] button

Remote control (sold separately): press the ⏻ [STAND BY] button

- While the “Are you sure you want to turn off?” message is displayed, press the button again.
- The laser light source turns off, and the “STANDBY/ON” indicator switches from a green light to a red blinking light.
- After the light goes off, the fan will run for about 5 seconds to cool down the laser light source (Cool-down mode).
  Do not disconnect the power cable while cooling is in progress.
- After about 5 seconds, the “STANDBY/ON” indicator switches from a blinking red to a solid red light.

“STANDBY/ON” blinking (red)
In the Cool-down mode

“STANDBY/ON” lights up (red)
In standby state

CAUTION

- After the light goes off, the fan will run for about 5 seconds to cool down the laser light source (Cool-down mode). Do not disconnect the power cable while cooling is in progress.
- The power cannot be turned on again while cooling is in progress (5 seconds).
- Pull out the power plug when the unit is not to be used for a prolonged period of time.
- If the Auto Intensity function is On, the cool-down time increases depending on the usage condition of the projector.

Adjustments and Settings in the Menu

Pressing the [MENU] button displays the menu.
Press the [▲▼◀ ▶] keys to select an item, followed by pressing the [OK] button to confirm the selection.

List of Menu Items

Picture Adjust

▶Picture Mode ..... p. 26
↳ Sharpness ..... p. 26
↳ Auto Intensity ..... p. 26
↳ LD Current ..... p. 26
↳ Aperture ..... p. 26
↳ User Name Edit ..... p. 26
▶Color Management ..... p. 27
▶Color Temp. ..... p. 28
▶Gamma ..... p. 28
▶4K e-shift ..... p. 28
▶Clear Motion Drive ..... p. 29
▶Contrast ..... p. 29
▶Brightness ..... p. 29
▶Color ..... p. 29
▶Tint ..... p. 29
▶Reset ..... p. 29

Input Signal

▶Input Level ..... p. 30
▶Color Space ..... p. 30
▶Hide ..... p. 30
▶Mask ..... p. 31
▶Picture Position ..... p. 31

Installation

▶Lens Control ..... p. 32
↳ Focus ..... p. 32
↳ Zoom ..... p. 32
↳ Shift ..... p. 32
↳ Image Pattern ..... p. 32
↳ Lock ..... p. 32
↳ Lens Center ..... p. 32
▶Pixel Adjust ..... p. 33
▶Installation Style ..... p. 37
▶LED Indication ..... p. 37

Display Setup

▶Back Color ..... p. 37
▶Menu Position ..... p. 37
▶Signal Display ..... p. 37
▶Logo ..... p. 37

Function

▶Off Timer ..... p. 38
▶Network ..... p. 38
▶Remote Code ..... p. 38
▶HIDE Mode ..... p. 38

Information

▶Information ..... p. 39

Picture Adjust

Picture Mode

You can adjust the image quality according to the type of video image you are viewing.

Item	Description
Natural	Image quality that focuses on natural color and gradation reproduction. Suitable for displaying video images in general.
Dynamic	This is the picture setting best suited for viewing the picture in a room that cannot be made completely dark.
User 1 to User 6	Enables user-defined image quality data to be saved and retrieved.

Sharpness

Emphasizes the outline of the video image.

- Setting range: 0 (not adjusted) to +50 (sharp)

Auto Intensity

Setting	Description
On	Light intensity will be constant. Intensity is determined by the “LD Current” when “Auto Intensity” turns on.
Off	Light intensity is manually set using the “LD Current” gauge.

* Depending on the usage and settings, “Auto Intensity” may not function.

LD Current

If “Auto Intensity” is off, light intensity is manually set using the gauge.

If “Auto Intensity” is on, the “LD Current” gauge is grayed out. The gauge moves to indicate the “Auto Intensity” control.

Aperture ZG

For adjusting the amount of opening of the optical iris.

- Stopping down the iris reduces the brightness, while opening it up increases the contrast.
- Setting range: -15 (stops down) to 0 (opens up)

User Name Edit

You can edit the “User 1” to “User 6” names in the Picture mode.

- Characters that are usable include alphabets (upper or lower case), numeric characters, and symbols.
- Enter not more than 10 characters.

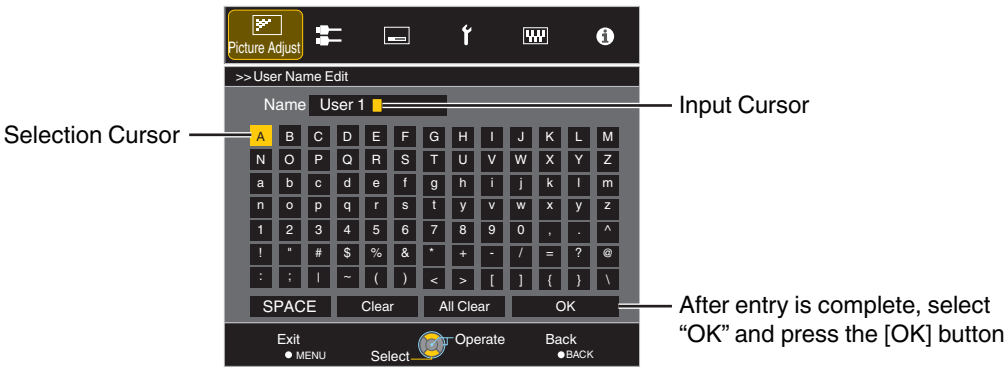

Color Management

Each of the colors is adjustable according to the user's preference.

1 Select the "Picture Adjust" → "Color Management" menu, and press the [OK] button.

2 Set "Color Management" to "On", and adjust to the preferred color.

① Select "Color Selection", and press the ◀ ▶ keys to select the color to adjust

- For color adjustment, select the color from the following: "Red", "Orange", "Yellow", "Green", "Cyan", "Blue", "Magenta".

② Adjust the selected color

Item	Setting Range	Description
Axis Position	-30 to 30	Fine-tune the position of the central axis of the selected color.
Hue	-30 to 30	Adjusts the hue (color tone).
Saturation	-30 to 30	Adjusts the color saturation (vividness). -30 (dull) to +30 (vivid)
Brightness	-30 to 30	Adjusts the brightness. -30 (dark) to +30 (bright)

- Selecting "Reset" resets all the adjustment data.
- Pressing the [HIDE] button enables you to check the image before adjustment.

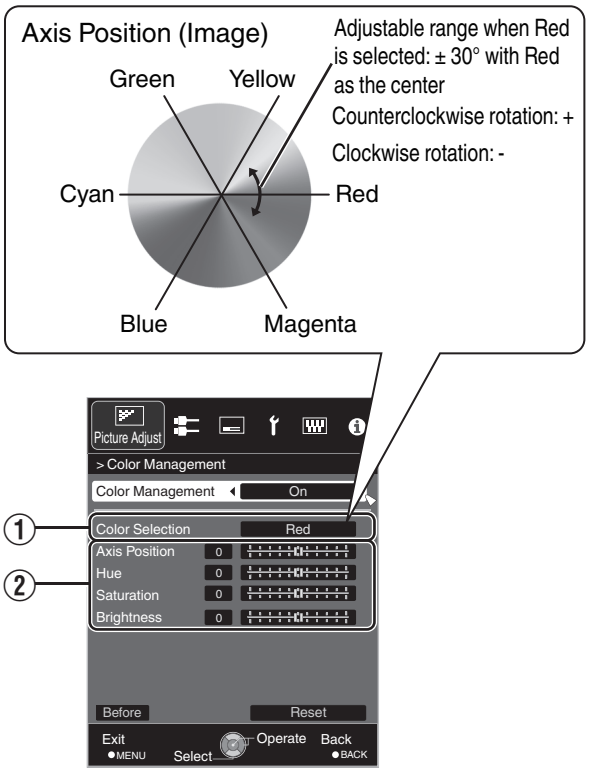

3 Press the [MENU] button to exit

Adjust/Set

Color Temp.

For setting the color temperature of the video image.

Preset

Setting	Description
5500K, 6500K, 9500K	Increasing the value enhances the blue tone of the video image, while decreasing the value enhances the red tone.
High Bright	Color temperature that gives priority to brightness.
Custom 1 to Custom 3	The color temperature of video images can be adjusted manually and saved as one of the three customized settings.

Custom

Setting	Description
Gain Red, Gain Green, Gain Blue	Adjusts each color in the bright parts of the video image. • Setting range: -255 (reduces the red/green/blue tone) to 0 (enhances the red/green/blue tone)
Offset Red, Offset Green, Offset Blue	Adjusts each color in the dark areas of the video image. • Setting range: -50 (reduces the red/green/blue tone) to +50 (enhances the red/green/blue tone)

Gamma

You can adjust the gamma curve of the projected image with respect to the video signal input.

Setting	Description
Normal	Recommended setting for normal viewing.
Custom 1 to Custom 3	Adjustable to a preferred gamma setting.

4K e-shift VS2500

For setting the 4K e-shift mode.

Setting	Description
On	Activates the e-shift device.
On (Upscaling)	Activates the e-shift device and 4K upscaling.
Off	Deactivates the e-shift device.

Clear Motion Drive

For reducing the after-image, which occurs in a fast-moving scene.

- Pressing the [C.M.D.] button each time switches the mode in the following sequence: “Off”→“Mode1”→“Mode2”→“Mode3”→“Mode4”→“Off”...

Setting	Description
Off	No black insertion and no motion interpolation.
Mode1	Black insertion weak.
Mode2	Black insertion strong.
Mode3	Motion interpolation weak.
Mode4	Motion interpolation strong.

* C.M.D. is the abbreviation for Clear Motion Drive.

Contrast

For adjusting the difference in brightness to produce an image with contrast.

- Setting range: -50 (little difference in brightness) to +50 (large difference in brightness)

Brightness

For adjusting the brightness of the video image.

- Setting range: -50 (darker) to +50 (brighter)

Color

For adjusting the color density of the video image.

- Setting range: -50 (lighter) to +50 (deeper)

Tint

For adjusting the hue of the video image.

- Setting range: -50 (reddish) to +50 (greenish)

Reset

For restoring the image quality adjustment settings to the factory default.

Input Signal

Input Level

For setting the dynamic range (gradation) of the video input.

- If the dynamic range is not appropriate, the bright areas become overexposed, and the dark areas become underexposed.

Setting	Description
0-255 (PC)	Select this setting if you are inputting PC signals (dynamic range: 0 - 255).
16-235 (Video)	Select this setting if you are inputting video signals (dynamic range: 16 - 235).

Color Space

For setting the color space of the input signal.

Setting	Description
YCbCr(4:4:4)	Select this setting when inputting YCbCr(4:4:4) video signals.
YCbCr(4:2:2)	Select this setting when inputting YCbCr(4:2:2) video signals.
RGB	Select this setting when inputting RGB video signals.

Hide VS2500

In the Dual mode, you can hide one of the images to check the operation of e-shift.

Setting	Description
Hide1	Hides the input image of HDMI1.
Hide2	Hides the input image of HDMI2.
Off	Does not hide the input images.

* This function is different from that of the Hide button on the remote control.

Mask

For hiding the peripheral area of the image with a mask (black strip).

■ Off

Setting	Description
Off	Not masked.
2.5%	Masks about 2.5% of the peripheral area of the image.
5%	Masks about 5.0% of the peripheral area of the image.
Custom	Masks about 0% to 5% of the four sides of the image.

■ On

Mask: black strip around the periphery

Picture Position (Horiz./Vert.)

Adjust the position if the edges of the image are partially missing due to the timing of horizontal and vertical synchronization signals.

Installation

Lens Control ZG

Focus / Zoom / Shift

For adjusting the lens according to the projection position

① Press the [LENS CONTROL] button, and use the [▲▼◀ ▶] keys to adjust Focus, Zoom (screen size), and Shift (screen position)

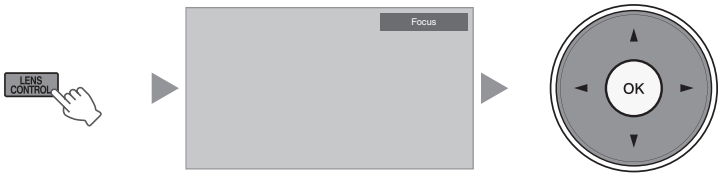

- Pressing the [LENS CONTROL] or [OK] button each time switches the mode in the following sequence: “Focus”→“Zoom”→“Shift”→“Focus”...

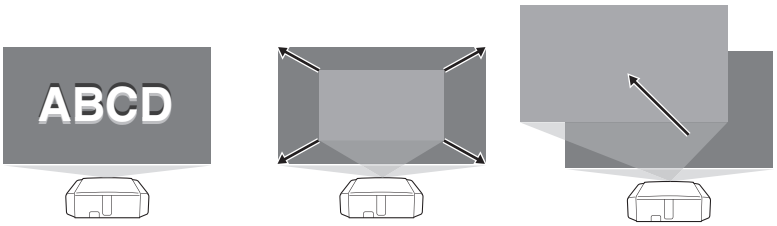

Focus Adjustment | Zoom (Screen Size) Adjustment | Shift (Screen Position) Adjustment

② Press the [BACK] button once, or the [MENU] twice, to end adjustment.

Image Pattern

Setting	Description
On	Displays the lens adjustment pattern.
Off	Displays external signals, and does not display the lens adjustment pattern.

Lock

Setting	Description
On	Locks the lens to prevent any erroneous operation on the adjustments. • Operation of the lens control feature is disabled when “On” is selected.
Off	Does not lock the lens.

Lens Center

Returns the lens position to the center.

Pixel Adjust

Adjust

For setting the adjustment feature to “On” or “Off”.

Adjust Area

Setting	Description
Whole	Adjusts the entire image.
Zone	Enables fine adjustment of each zone by dividing the screen into 11 vertical x 11 horizontal zones.

Adjust Color

For selecting the color to adjust (“Red” or “Blue”).

Adjust Pattern

Setting	Description
On	Displays the lens adjustment pattern.
Off	Displays external signals, and does not display the lens adjustment pattern.

Adjust Pattern Color

For setting the adjustment pattern color to “White” or “Yellow / Cyan”.

Adjust(Pixel)

When “Adjust Area” is set to “Whole”, adjustment can be made by moving in units of one pixel on the screen of the color selected in “Adjust Color”.

➡ “Operation procedure for Whole Adjust (Pixel)” (p. 34)

* Adjustment cannot be made when “Adjust Area” is set to “Zone”.

Setting	Description
H (Horizontal)	Setting range: -2 (moves red/blue to the left) to +2 (moves red/blue to the right)
V (Vertical)	Setting range: -2 (moves red/blue downward) to +2 (moves red/blue upward)

Adjust(Fine)

When “Adjust Area” is set to “Whole”, adjustment can be made by moving in units of 1/16 pixel on the screen of the color selected in “Adjust Color”.

➡ “Operation procedure for Whole Adjust (Fine)” (p. 35)

When “Adjust Area” is set to “Zone”, the screen is divided into 11 vertical x 11 horizontal zones, and fine adjustment of each zone is possible.

➡ “Operation procedure for Zone Adjust” (p. 36)

Setting	Description
H (Horizontal)	Setting range: -31 (moves red/blue to the left) to +31 (moves red/blue to the right)
V (Vertical)	Setting range: -31 (moves red/blue downward) to +31 (moves red/blue upward)

Reset

Restores all pixel adjustment data to the factory default.

Operation procedure for Whole Adjust (Pixel)

For making general adjustments to slight color fringing in the horizontal/vertical directions of the video image.

① Set “Adjust Area” to “Whole”

② Select “Adjust Color” and “Adjust Pattern Color”

③ Select “Adjust(Pixel)”, and press the [OK] button

- The selected adjustment pattern and Adjustment (Pixel) window are displayed.

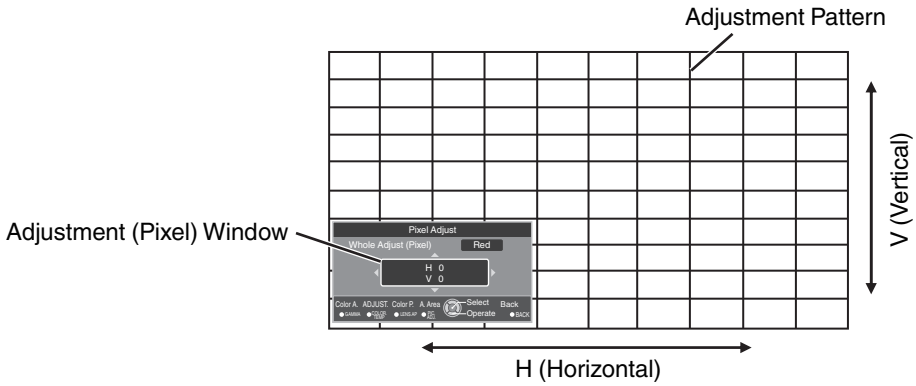

④ Press the [OK] button to enter the Adjustment mode

⑤ Use the [▲▼◀▶] keys to move and adjust the pixels in the vertical and horizontal directions across the entire screen.

- The adjustment setting appears at the center of the Adjustment (Pixel) window.

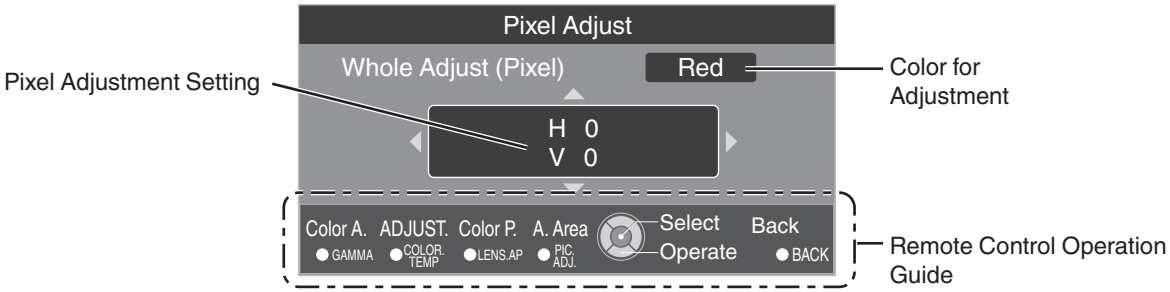

⑥ After adjustment is complete, press the [BACK] button to exit the Adjustment mode

Remote Control Operation Guide

Button Name	Description of Operation
[GAMMA]	Changes “Adjust Color”.
[COLOR TEMP.]	Switches between “Adjust(Pixel)” and “Adjust(Fine)”. • Switches to “Adjust(Pixel)” when “Adjust Area” is set to “Zone”.
[LENS.AP]	Changes “Adjust Pattern Color”.
[PIC ADJ.]	Switches “Adjust Area”. • A zone cursor appears on the adjustment pattern when the “Zone” setting is selected.

Operation procedure for Whole Adjust (Fine)

For making general adjustments on the misalignment of the entire screen using “Adjust(Pixel)”, followed by making fine adjustments.

① Set “Adjust Area” to “Whole”

② Select “Adjust Color” and “Adjust Pattern Color”

③ Select Adjust(Fine), and press the [OK] button

- The selected adjustment pattern and Fine window are displayed.
- The adjustable range may be smaller depending on the pixels being adjusted on the entire screen.

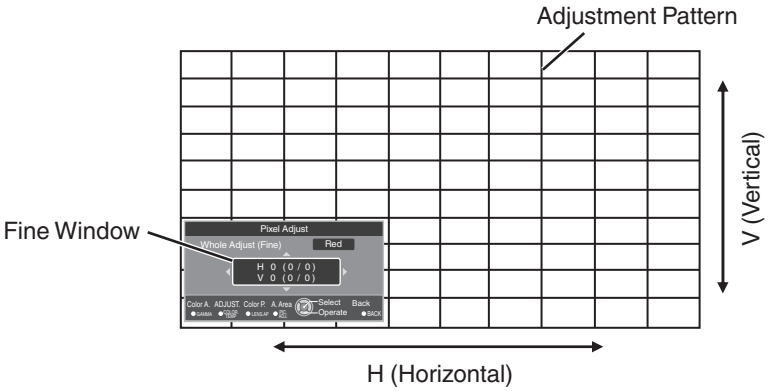

④ Press the [OK] button to enter the Adjustment mode

⑤ Use the [▲▼◀▶] keys to move and adjust the pixels in the vertical and horizontal directions across the entire screen.

- The adjustment setting appears at the center of the Fine window.

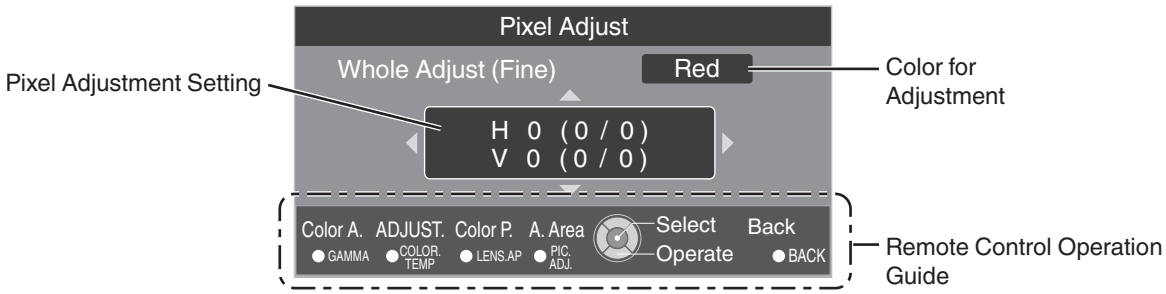

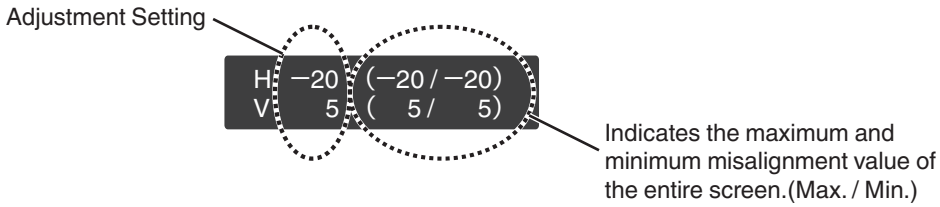

⑥ After adjustment is complete, press the [BACK] button to exit the Adjustment mode

MEMO

- If both the maximum overall screen misalignment of H (horizontal direction) and V (vertical direction) are “31”, you cannot select a value that is larger than the displayed setting even when the adjustment setting is lower than the maximum value.
- If the minimum overall screen misalignment is “-31”, you cannot select a value that is smaller than the displayed setting even when the adjustment setting is higher than the minimum value.

Operation procedure for Zone Adjust

For fine-tuning misalignments on a part of the screen after adjusting the overall screen misalignment using “Adjust(Pixel)” and “Adjust(Fine)”.

- The screen can be divided vertically and horizontally into 10 sections for partial adjustments to be made.

① Set “Adjust Area” to “Zone”

② Select “Adjust Color” and “Adjust Pattern Color”

③ Select Adjust(Fine), and press the [OK] button

- The selected adjustment pattern and Zone Adjustment window are displayed.
- The adjustable range may be smaller depending on the pixels being adjusted on the entire screen.

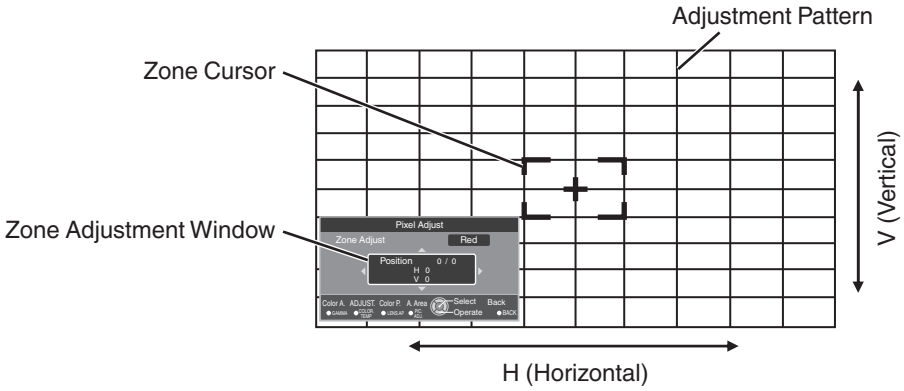

④ Press the [▲▼◀▶] keys to move the cursor to the point to be adjusted

⑤ Press the [OK] button to enter the Adjustment mode

⑥ Use the [▲▼◀▶] keys to move and adjust the pixels in the vertical and horizontal directions across the entire screen.

- The adjustment setting appears at the center of the Zone Adjustment window.

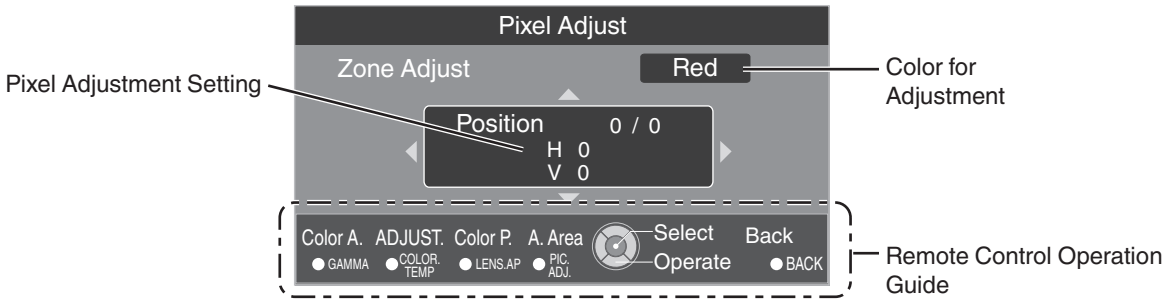

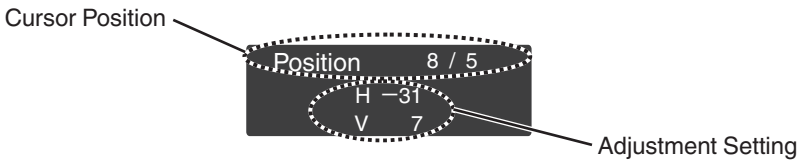

⑦ After adjustment is complete, press the [BACK] button to exit the Adjustment mode

Installation Style

For setting to “Front”, “Ceiling Mount (F)”, “Rear”, or “Ceiling Mount (R)” according to the installation status of the projector.

- “Front” or “Ceiling Mount (F)” is set when projector is installed in the front with respect to the screen.
- “Rear” or “Ceiling Mount (R)” is set when projector is installed in the rear with respect to the screen.

LED Indication

When LED Indication is set to “Off”, the LED indicator does not light up or blink under the following status.

- When the time to replace the laser light source is near. (p. 53)
- When HIDE is on. (p. 52)
- When the projector receives a signal from a remote control which is set to a different code mode (A or B). (p. 38)

Display Setup

Back Color

For setting the color of the background to “Blue” or “Black” when there is no input signal.

Menu Position

For setting the display position of the menu.

Signal Display

Setting	Description
On	Displays the input terminal and input signal type when input is switched.
Off	Not displayed.

Logo

Setting	Description
On	Displays the “D-ILA” logo for 5 seconds during startup.
Off	Not displayed.

Function

Off Timer

For setting the timing to power off the unit automatically (“1 Hour”, “2 Hours”, “3 Hours”, or “4 Hours”) when it is not operated for a period of time.

Network

Setting		Description
DHCP Client	On	Obtains the IP address automatically from the DHCP server inside the connected network.
	Off	For configuring the network settings manually.
IP Address		For configuring the IP address.
Subnet Mask		For configuring the subnet mask.
Default Gateway		For configuring the default gateway.
MAC Address		Displays the MAC address of the unit.
Set		Applies the network settings.

Glossary of Network Terminology

DHCP : Abbreviation for Dynamic Host Configuration Protocol. This is a protocol for the network to assign an IP address automatically to the connected device.

IP Address : Numeric characters for identifying the device that is connected to the network.

Subnet Mask : Numeric characters that define the bit count used for the network address that is a segment of the IP address.

Default Gateway : Server for communicating beyond the network that is divided by the subnet mask.

MAC Address : Abbreviation for Media Access Control address. This is a number that is unique to each network adapter. Each of the network adapters is assigned with a unique MAC address.

Remote Code

For changing the remote control code.

- You need to configure the remote control according to the settings of this unit.
  On the remote control unit, press the [MENU] and [BACK] buttons at the same time for three seconds or longer to switch the code.
  - The backlight of the remote control blinks 3 times: change the remote control code to “A”
  - The backlight of the remote control blinks 2 times: change the remote control code to “B”

Setting	Description
A	Change the remote control code from “B” to “A”.
B	Change the remote control code from “A” to “B”.

* “STANDY/ON” indicator blinks 3 times when the projector receives a signal from a remote control which is set to a different code mode (A or B).

HIDE Mode

Setting	Description
Normal	Hide the image, laser light source power doesn’t change.
ECO	Hide the image, laser light source power decrease.

Information

During video signal input

Setting	Description
Input	Displays video input terminal.
Source	Displays the input source.
Deep Color*	Displays the color bit depth of the input video signal. • Displayed when Deep Color information is received from the source device.
Light source time	Displays the laser light source time.
Soft Ver.	Displays the firmware version.
PS Ver.	Displays the version of image quality data.
Unit ID	Adds an ID to the projector.

During PC signal input

Setting	Description
Input	Displays video input terminal.
Resolution*	Displays the image resolution.
H Frequency*	Displays the horizontal frequency.
V Frequency*	Displays the vertical frequency.
Deep Color*	Displays the color bit depth of the input video signal. • Displayed when Deep Color information is received from the source device.
Light source time	Displays the laser light source time.
Soft Ver.	Displays the firmware version.
PS Ver.	Displays the version of image quality data.
Unit ID	Adds an ID to the projector.

* During Dual input, Deep Color, Resolution, and H/V Frequency are not displayed.

Maintaining the Cabinet and Remote Control (Sold Separately)

- Gently wipe off dirt on the cabinet with a soft cloth.
- If it is extremely dirty, wet a cloth in water, wring dry and use it to wipe off the dirt, followed by wiping again with a dry cloth.
- Pay attention to the following as the cabinet may deteriorate in condition or the paint may come off.
  - Do not wipe with thinner or benzine
  - Do not allow prolonged contact with rubber or plastic products
  - Do not spray volatile chemicals such as insecticide

Cleaning and Replacing the Filter

Clean the filter regularly Otherwise, the air intake efficiency may deteriorate, and malfunction may occur.

CAUTION

- Make sure that you pull out the power plug from the outlet before cleaning or replacing the filter.
- Before turning this unit upside down and placing it on the floor or a table, make sure that you lay a soft rag in advance to prevent the projector from being scratched.

1 Remove the inner filter

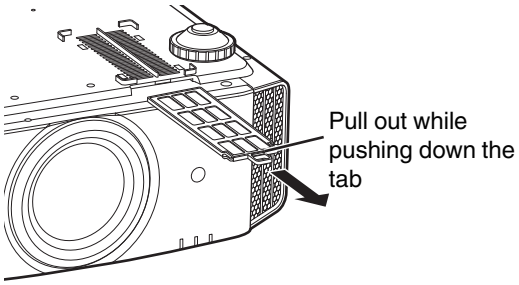

2 Clean the filter

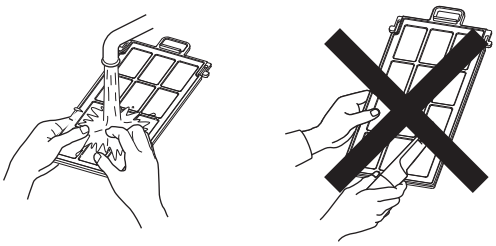

- Wash the filter with water and dry it in a shaded area.
- If the filter is extremely dirty, clean it with a neutral detergent. Put on rubber gloves when using a neutral detergent.
- After washing the filter with water, make sure that it is completely dry before reinstalling. Otherwise, electric shock or malfunction may occur.
- Do not clean the filter with a vacuum cleaner or air duster. The filter is soft and may be easily damaged.

3 Reinstall the inner filter

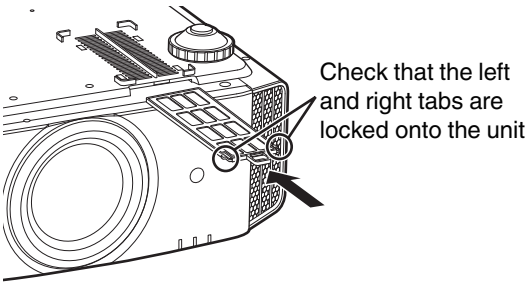

If the filter is damaged or too dirty to be cleaned

- Replace with a new filter. A dirty filter will dirty the internal parts of the unit and cause shadows to appear on the video image.
- To purchase a new filter or when there is dirt in the internal parts of the unit, consult your authorized dealer or nearby service center.
- Inner filter (exchangeable filter)
  Product no.: PC010661199

Troubleshooting

Before sending the unit to your authorized dealer for repair, please check the following points.

The following symptoms are not malfunctions.

You do not need to worry about the following symptoms if there is no abnormality on the screen.

- A part of the top or front surface of the unit is hot.
- A creaking sound is heard from the unit.
- An operating sound is heard from the inside of the unit.
- Color smear occurs on some screens.

This unit is a digital device. This unit may become unable to operate normally due to external static or noise. Perform the following operations when such malfunctions occur.

① If the unit is in the Standby mode, pull out the power plug, followed by inserting it again

② Press the ⏻/I [STANDBY/ON] button on the main unit to turn on the power again

Power is not supplied

Check	Action	Refer to
Is the power cord disconnected?	Insert the power cord (plug) firmly.	p. 21
Is the laser light source in the Cool-down mode?	After exiting the Cool-down mode, turn on the power again.	p. 23

Power shuts down automatically

Check	Action	Refer to
Has “Off Timer” been configured?	Set “Off Timer” to “Off”.	p. 38
Are the air inlets and exhaust vent blocked?	Leave proper clearance when installing the unit.	p. 11, 12 p. 16
Is the filter dirty?	Clean the filter.	p. 41

Video image does not appear

Check	Action	Refer to
Is the correct external input selected?	Select the correct external input terminal.	p. 22
Is the power of the video source equipment turned on?	Turn on the power of the video source equipment and play the video.	p. 19
Is the video source equipment properly connected?	Check to ensure that the video source equipment is properly connected.	p. 19
Are the correct signals being output from the video source equipment?	Configure the video source equipment correctly.	p. 19
Is the cable in use an HDMI-certified cable?	Use an HDMI-certified high-speed cable. Also, use as short a cable as possible.	p. 19
Is the video image temporarily hidden?	Press the [HIDE] button	p. 22

Cool-down time is long

Check	Action	Refer to
Is the Auto Intensity function On?	Please wait until the Cool-down mode is completed. If the Auto Intensity function is On, it will take up to 6 minutes to process the brightness adjustment.	p. 23

Video image looks unnatural

Colors are unnatural

Check	Action	Refer to
Is the color space of the input signal correctly set?	The color may turn out unnatural when the input signal is different from that in the projector setting. Set the “Color Space” for “Input Signal” correctly.	p. 30
Is the image correctly adjusted?	Adjust “Color” and “Tint” accordingly.	p. 29, p. 29
Is the video source equipment properly connected?	Check to ensure that the video source equipment is properly connected.	p. 19

* The video image may appear slightly reddish immediately after starting up. This is not a malfunction.

Video image is fuzzy

Check	Action	Refer to
Is the focus correctly adjusted?	Adjust the focus.	p. 32
Is the unit placed too near or too far away from the screen?	Set the unit at a correct distance from the screen.	p. 50

Projected image is dark

Check	Action	Refer to
Is the laser light source near exhaustion?	Check the laser light source time in the “Information” menu. If 40,000 hours have elapsed, the brightness will be half the brightness at shipment.	p. 39
Is the aperture closed?	Adjust the Aperture.	p. 26
Is “LD Current” set to “Lower”?	Set “LD Current” to “Higher”	p. 26

Video images are missing

Check	Action	Refer to
Has screen mask been configured?	Set “Mask” to “Off”.	p. 31
Is the display position misaligned?	Alter the “Picture Position” value so that the entire image appears on the screen.	p. 31

Remote control does not work

Check	Action	Refer to
Are the batteries correctly loaded?	Match the polarities (⊕⊖) correctly when loading the batteries.	p. 15
Are the batteries exhausted?	Replace with new batteries.	p. 15
Is there an obstructing object between the remote control and remote sensor?	Remove any obstructing object.	p. 15
Is the remote control held too far away from the unit?	Hold the remote control closer to the sensor during use.	p. 15

There are small black or colored dots on the screen

The D-ILA device is manufactured using high-precision technologies, but there may be some (less than 0.01%) missing pixels or pixels that remain permanently lit. This is not a malfunction.

When the following messages appear...

Message	Description	Action
HDMI 1 No Input	• No device is connected to the input terminal. • The input terminal is connected but there is no signal.	Input the video signals.
HDMI 1	A video signal that cannot be used with this unit has been input (The names of input terminals such as “HDMI-1” and “HDMI-2” will be displayed in yellow).	• Input video signals that can be used. (p. 52) • In the Dual mode, switch to HDMI1 or HDMI2 and check whether the signals can be input.

External Control

You can control this unit by connecting it to a PC using an RS-232C null modem cable (D-sub 9-pin).
The projector can be controlled by connecting it to a PC through the computer network with a LAN cable for control commands to be sent to the projector.

- Please use it after you have gained proper understanding from professional books or consulting the system administrator.

RS-232C Specifications

This Unit

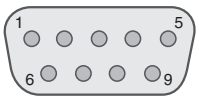

Pin No.	Signal	Function	Signal Direction
2	RxD	Receive data	PC → This unit
3	TxD	Transmission data	This unit → PC
5	GND	Signal ground	—
1, 4, 6 - 9	N/C	—	—

- PC refers to the controller, such as a personal computer.

Mode	Non-synchronous
Character length	8 bit
Parity	None
Start bit	1
Stop bit	1
Data rate	19200 bps
Data format	Binary

TCP/IP Connection

Before controlling via LAN, it is necessary to establish connection of the TCP layer by a “3-way handshake”, followed by sending out “PJREQ” and receiving “PJACK” within 60 seconds after the projector sends out “PJ_OK” for connection authentication.
If you are unable to complete sending within 60 seconds, or when “PJ_NG” or “PJNAK” is received, check the operating status of the projector, followed by performing the steps again starting from establishment of a TCP connection.

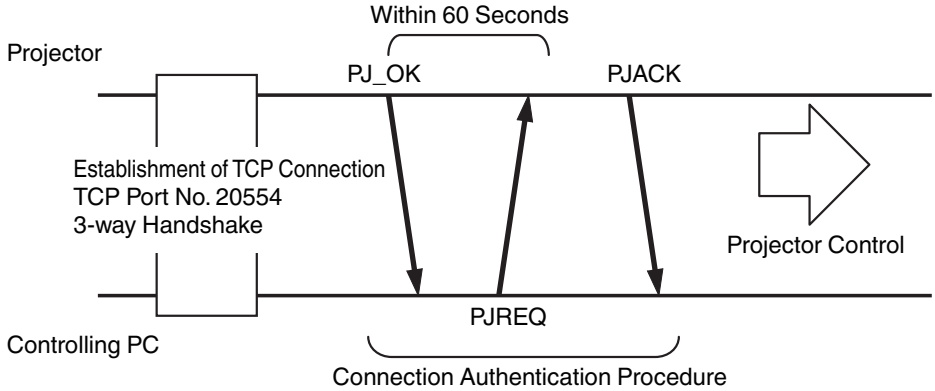

Command Format

The command between this unit and the computer consists of “Header”, “Unit ID”, “Command”, “Data” and “End”.

- Header (1 byte), Unit ID (2 bytes), Command (2 bytes), Data (n bytes), End (1 byte)

Header

This binary code indicates the start of communication.

Binary Code	Type	Description
21	Operating command	PC → This unit
3F	Reference command	PC → This unit
40	Response command	This unit → PC
06	ACK	This unit → PC (returns to PC after the command is accepted without error)

Unit ID

This is a code that specifies the unit. The binary code is fixed at “8901”.

Command and data

Operating command and data (binary code)

Command	Type	Description
0000	Connection check	Check whether communication is enabled between this unit and the PC during standby.
5057	Power supply	During standby 31: Turns on the power When power is on 30: Turns off the power (Standby mode)
4950	Input	When power is on 36: HDMI 1 37: HDMI 2
5243	Remote control	Sends the same code as the supplied remote control. • “Remote Control Code”p. 47

Operating command and data (binary code)

Command	Type	Description
5057	Power supply	During standby or when power is on 30: Standby mode 31: When power is on 32: In the Cool-down mode 33: Starting up 34: When error occurs on this unit
4950	Input	When power is on 32: Dual 36: HDMI 1 37: HDMI 2

End

This code indicates the end of communication. The binary code is fixed at “0A”.

Remote Control Code

Binary code is sent during communication.

- The following applies to the case when the remote control code is “A”. In the case of “B”, add “36” to the beginning of the code.

Remote Control Button Name	Binary Code
STAND BY	37 33 30 36
ON	37 33 30 35
HDMI 1	37 33 37 30
HDMI 2	37 33 37 31
Dual	37 33 34 44
LENS CONTROL	37 33 33 30
Aperture	37 33 32 30
HIDE	37 33 31 44
▲	37 33 30 31
▼	37 33 30 32
▶	37 33 33 34
◀	37 33 33 36
OK	37 33 32 46

Remote Control Button Name	Binary Code
MENU	37 33 32 45
BACK	37 33 30 33
NATURAL	37 33 36 41
DYNAMIC	37 33 36 42
USER	37 33 44 37
C.M.D.	37 33 38 41
INFO	37 33 37 34
GAMMA	37 33 37 35
C. TEMP	37 33 37 36
PIC. ADJ.	37 33 37 32

Communications Example

This section shows the communication examples of RS-232C.

Operating command

Type	Command	Description
Connection check	PC → This unit: 21 89 01 00 00 0A This unit → PC: 06 89 01 00 00 0A	Connection check
Power (On)	PC → This unit: 21 89 01 50 57 31 0A This unit → PC: 06 89 01 50 57 0A	When power is turned on from the Standby mode
Power (Off)	PC → This unit: 21 89 01 50 57 30 0A This unit → PC: 06 89 01 50 57 0A	When power is turned off (Standby mode) from power-on mode
Input (HDMI 1)	PC → This unit: 21 89 01 49 50 36 0A This unit → PC: 06 89 01 49 50 0A	When video input is set to HDMI 1
Remote control (MENU)	PC → This unit: 21 89 01 52 43 37 33 32 45 0A This unit → PC: 06 89 01 52 43 0A	When the same operation as pressing the [MENU] button on the remote control is performed

Reference command

Type	Command	Description
Power (On)	PC → This unit: 3F 89 01 50 57 0A This unit → PC: 06 89 01 50 57 0A This unit → PC: 40 89 01 50 57 31 0A	When information on the power-on state is acquired
Input (HDMI 1)	PC → This unit: 3F 89 01 49 50 0A This unit → PC: 06 89 01 49 50 0A This unit → PC: 40 89 01 49 50 36 0A	When information on HDMI 1 input is acquired

Specifications

Product Name		D-ILA Projector
Model Name		DLA-VS2500ZG, DLA-VS2500G, DLA-VS2300ZG, DLA-VS2300G
Display Panel/Size		D-ILA device *1, 2 0.7" (1920 x 1080 pixels) x 3 (total no. of pixels: approx. 6.22 million)
Projection Lens		2.0x power zoom lens (1.4:1 to 2.8:1), motorized zoom and focus ZG
Light source		BLU-Escent Technology (Laser and Phosphor)
Screen Size		Approx. 60" to 200" (Aspect ratio of 16:9) ZG
Projection Distance		Refer to p. 50. ZG
Input Compatibility Signal		Refer to p. 52.
Display Resolution		3840 x 2160 pixels (VS2500) 1920 x 1080 pixels (VS2300)
HDMI Input Terminal		Dual, HDMI 19-pin x2
Control Terminal	RS-232C Terminal	D-sub 9-pin (male) (external control) x1
	Remote Terminal	Stereo mini jack (remote control) x1
	LAN Terminal	RJ-45 jack x1
Power Requirements		AC 100 V to 240 V, 50 Hz/60 Hz
Power Consumption		290 W (during standby: 5 W)
Operation Environment		Temperature: 5°C to 35°C; humidity: 20% to 80%; storage temperature: -10°C to 60°C
Installation Height		Below 6,561 ft (2,000 m)
Dimensions (Width x Height x Depth)		Approx. 455 mm x 179 mm x 472 mm (excluding foot and protrusions)
Mass		17.3 kg (ZG) 16.5 kg (G)
Accessories		Refer to p. 10.

*1 D-ILA is the abbreviation for Direct drive Image Light Amplifier.

*2 D-ILA devices are manufactured using extremely high-precision technology with a pixel effectiveness of 99.99%. Only 0.01% or less of the pixels are either missing or would remain permanently lit.

- Design and specifications are subject to change without prior notice.
- Please note that some of the pictures and illustrations may have been abridged, enlarged or contextualized in order to aid comprehension. Images may differ from the actual product.

About Trademarks and Copyrights

HDMI, HDMI logo and High-Definition Multimedia Interface are trademarks or registered trademarks of HDMI Licensing LCC.

Screen Size and Projection Distance

When a 16:9 screen is used ZG

Screen Size			Projection Distance	
Diagonal (inch)	Width (mm)	Height (mm)	Wide-end (m)	Tele-end (m)
60	1328	747	1.78	3.66
70	1549	872	2.09	4.28
80	1771	996	2.4	4.89
90	1992	1121	2.7	5.51
100	2214	1245	3.01	6.13
110	2435	1370	3.31	6.75
120	2656	1494	3.62	7.36
130	2878	1619	3.92	7.98
140	3099	1743	4.23	8.60
150	3320	1868	4.53	9.22
160	3542	1992	4.84	9.84
170	3763	2117	5.14	10.45
180	3984	2241	5.45	11.07
190	4206	2366	5.75	11.68
200	4427	2490	6.06	12.30

When a 4:3 screen is used ZG

Screen Size			Projection Distance	
Diagonal (inch)	Width (mm)	Height (mm)	Wide-end (m)	Tele-end (m)
60	1219	914	2.22	4.49
70	1422	1067	2.60	5.24
80	1626	1219	2.98	6.00
90	1829	1372	3.36	6.75
100	2032	1524	3.74	7.51
110	2235	1676	4.11	8.26
120	2438	1829	4.49	9.02
130	2642	1981	4.87	9.77
140	2845	2134	5.25	10.53
150	3048	2286	5.63	11.28
160	3251	2438	6.00	12.04

* Projection to a 4:3 screen larger than 163" is equivalent to a size that is larger than 200" in the 16:9 format, and is beyond our guarantee coverage.

Types of Possible Input Signals

Video (HDMI1, HDMI2)

Digital Video Signal	480p/60 Hz (4:3), 576p/50 Hz (4:3), 720p/50 Hz, 720p/60 Hz, 1080p/50 Hz, 1080p/60 Hz

Video (Dual)

Digital Video Signal	1080p/50 Hz, 1080p/60 Hz

- In the Dual mode, both HDMI1 and HDMI2 need to be synchronized at 1080p/60 Hz or at 1080p/50 Hz.

PC Signal (HDMI1, HDMI2)

No.	Designation	Resolution	fh [kHz]	fv [Hz]	dot CLK [MHz]	Total No. of Hsize [dot]	Total No. of Lines [line]	No. of Effective Dots [dot]	No. of Effective Lines [line]
1	VGA 60	640×480	31.500	60.000	25.200	800	525	640	480
2	VGA 59.94	640×480	31.469	59.940	25.175	800	525	640	480

Indicator Display on the Main Unit

Meaning of the lighting figures

The indicator lights up.

The indicator appears blinking.

Operation mode display

Displays using the different colors and solid/blinking light of the “STANDBY/ON” indicator.

“STANDBY/ON” lights up (red)
In standby state

“STANDBY/ON” lights up (green)
During laser light source startup

All lights off
During projection

“STANDBY/ON” blinking (red)
In the Cool-down mode

“STANDBY/ON” blinking (green) *
When the video image is temporarily hidden (HIDE is on)

* “STANDY/ON” indicator does not blink when “LED Indication” is set to “Off”.

Estimated timing for laser light source replacement

Displays using the solid/blinking light of the “LIGHT” indicator. The “STANDBY/ON” indicator, which shows the operating mode of the unit, is also displayed simultaneously.

* “LIGHT” indicator does not light up when “LED Indication” is set to “Off” (p. 37).

“LIGHT” lights up (orange)

If 40,000 hours have elapsed, the brightness will be half the brightness at shipment.

Lights up when the “LD Current” gauge reaches 95 and above. (When the Auto Intensity function is On.)

Warning display

You can tell the details of a warning from the (repeated) displays of the “WARNING” and “LIGHT” indicators. The “STANDBY/ON” indicator, which shows the operating mode of the unit, is also displayed simultaneously.

The projector enters into Warning mode once the “WARNING” indicator is displayed. The power cannot be turned on again under this condition.
Allow the projector to cool down for a while, then check the following.

Indicator Status (Solid/Blinking)	Blinking Frequency	Description	Check and Countermeasure
STANDBY/ON LIGHT WARNING Mode Display (*) (Red)	x1	Abnormality in the power supply	• Check that nothing is blocking the air inlets. • Check that the external temperature is normal. Countermeasure: Leave the unit unoperated until it cools down. After that, turn on the power again.
	x2	Cooling fan stopped abnormally	
	x3	Internal temperature is abnormally high	
	x4	External temperature is too high	
	x5	Abnormal circuit operation	
STANDBY/ON LIGHT WARNING Mode Display (Orange) (Red) Blinking Simultaneously	x1	Abnormal circuit operation	
	x2		
	x3		
STANDBY/ON LIGHT WARNING Mode Display (Orange) (Red)	x1	LD Driver or LD light source Error	Countermeasure: Leave the unit unoperated until it cools down. After that, turn on the power again.
	x2	Wheel Error	
	x3	Color Sensor Error	
	x4	Inter Lock	

If the Warning mode is activated again, wait for the cooling fan to stop, followed by pulling out the power plug from the outlet.
Request for repair at your authorized dealer or a nearby service center.

(*) If the scheduled time for laser light source replacement is exceeded, the indicator may light up.

Dimensions

(Unit: mm)

Top Surface

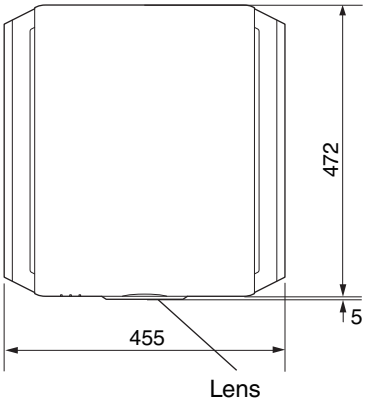

Bottom Surface

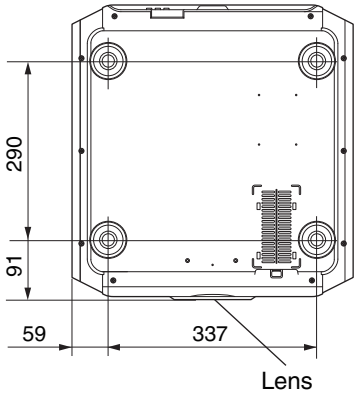

Front

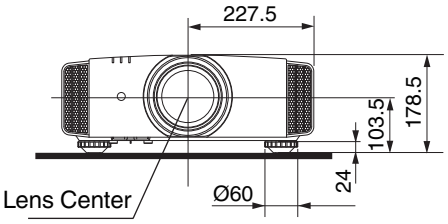

Rear Surface

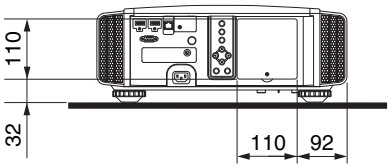

- The dimensions are identical for all the models.

Index

A Accessories 10
Projection Screen Adjustment 32
Adjustment and Setting by the Menu 24
Adjustment of the Image Quality 26
Aperture 26

B Back Color 37
Basic Setting for Image Quality 26
Brightness 29

C C.M.D (Clear Motion Drive) 29
Ceiling Mount 17
Cleaning and Replacing the Filter 41
Clear Motion Drive 29
Color Density 29
Color Management 27
Color Shade 29
Color Space 30
Color Temperature 28
Connection 19
Contrast 29
Controls and Features 11

D Dimensions 54
Display Position 31
Dual 22

E External Control 45

F Filter Product no. 41
Filter Replacement 41
Focus 32
Frame Interpolation 29

G GAMMA 28
Gamma Adjustment 28

H HDMI Input Terminal 19
Hide 30
HIDE 22

I Indicator Display 52
Input Level 30
Input Resolution 39, 52
Input Signal 39, 52
Input terminals 13
Installation Method 16

L LD Current 26
Lens 11
Lens Control 32
Lens sheet 11
Lens Shift 32
Light source time 39
Line Display 37
Logo Display 37

M Menu Items 24
Menu Position 37

N Network 38

O Off Timer 38
Optional Accessories 10

P PIC. ADJ. 29
Picture Mode 26
Precautions during Installation 16
Projection Distance 50

R Remote Control 14
RS-232C 20

S Screen Mask 31
Screen Size and Projection Distance 50
Sharpness 26
Shift 32
Signal Display 39
Signal Display 37
Software Ver. 39
Specifications 49

T Troubleshooting 42

V Viewing Videos 22

W When the following messages appear... 44

Z Zoom 32

Symbol
4K e-shift 28

DLA-VS2500ZG
DLA-VS2500G
DLA-VS2300ZG
DLA-VS2300G
D-ILA Projector

JVC

Importer (EU only)
JVCKENWOOD U.K. Limited
12 Priestley Way, London NW2 7BA, UNITED KINGDOM

Importeur (Nur EU)
JVCKENWOOD Deutschland GmbH
Konrad-Adenauer-Allee 1-11, 61118 Bad Vilbel, DEUTSCHLAND

Importateur (EU uniquement)
JVCKENWOOD France S.A.S.
7 Allee des Barbanniers, CS20034
92632 Gennevilliers Cédex, FRANCE

Importatore (Solo EU)
JVCKENWOOD Italia S.p.A.
Via G. Sirtori 7/9, 20129 Milano, ITALIA

Importador (Solamente EU)
JVCKENWOOD Ibérica S.A.
Ctra. Rubi, 88 Edificio Can Castanyer, 08174 Sant Cugat del Valles,
Barcelona, ESPAÑA

Importeur (Alleen EU)
JVCKENWOOD Belgium N.V.
Leuvensesteenweg 248J, 1800 Vilvoorde, BELGIQUE

Importeur (Alleen EU)
JVCKENWOOD Nederland B.V.
Amsterdamseweg 37, 1422 AC Uithoorn, NEDERLAND

Manufacturer
JVCKENWOOD Corporation
3-12,Moriya-cho, Kanagawa-ku,Yokohama-shi,Kanagawa,
221-0022, JAPAN

© 2015 JVCKENWOOD Corporation

0317KSY-SW-X