VACON®20 X
AC DRIVES

INSTALLATION, TECHNICAL AND MAINTENANCE MANUAL

D-OPTION

VACON®

INDEX

Document code (Original Instructions): DPD01623C
Rev. C
Revision release date: 9.12.21

1. Safety 5
1.1 Signs 5
1.2 Units 5
1.3 Danger 6
1.4 Hot surface warning 6
1.5 Warnings 7
1.6 Earthing and earth fault protection 8
1.7 Insulation system 10
1.8 Compatibility with RCDs 10
1.9 Extended temperature range 11
2. Receipt of delivery 12
2.1 Type designation code 13
2.2 Order codes 14
2.3 Unpacking and lifting the AC drive 16
2.3.1 Disposal 16
3. Mounting 17
3.1 Dimensions 17
3.1.1 Frame MU2 and MU3 17
3.2 Cooling 19
4. Power cabling 21
4.1 Circuit breaker 23
4.2 UL standards on cabling 23
4.3 Description of the terminals (20X D-option with AS-i) 24
4.3.1 MU2 connections 24
4.3.2 MU3 connections 26
4.4 Description of the terminals (20X D-option with Profibus) 28
4.4.1 MU2 connections 28
4.4.2 MU3 connections 30
4.5 Description of the terminals (20X D-option with CanOpen) 32
4.5.1 MU2 connections 32
4.5.2 MU3 connections 34
4.6 Description of the terminals (20X D-option with Devicenet) 36
4.6.1 MU2 connections 36
4.6.2 MU3 connections 38
4.7 Cable dimensioning and selection 40
4.8 Recommended plug terminals and cable dimensions 42
4.8.1 MU2 42
4.8.2 MU3 43
4.8.3 Recommended metallic plugs for motor cables 44
5. Commissioning 45
5.1 Commissioning of the drive 46
5.2 Running the motor 46
5.2.1 Cable and motor insulation checks 46
5.3 Maintenance 47
6. Technical data 48
6.1 AC drive power ratings 48
6.1.1 Mains voltage 3AC 380-480V 48
6.1.2 Definitions of overloadability 48
6.2 VACON® 20 X - technical data 49

6.2.1 Technical information on control connections 52
7. Options 53
7.1 Vacon keypad with seven-segment display 53
7.1.1 Mounting onto the drive 53
7.1.2 Text Keypad - buttons 56
7.2 Text keypad 57
7.3 Menu structure 57
7.4 Using the keypad 58
7.4.1 Main menu 58
7.4.2 Resetting fault 59
7.4.3 Local/Remote control button 59
7.4.4 Reference menu 59
7.4.5 Monitoring menu 60
7.4.6 Parameter menu 61
7.4.7 System/Fault menu 62
7.4.8 Fault tracing 64
7.5 Led handling 68
8. Safe Torque Off 69
8.1 General description 69
8.2 Warnings 69
8.3 Standards 70
8.4 The principle of STO 71
8.4.1 Technical details 71
8.5 Connections 72
8.5.1 Safety Capability Cat.1 / PL c / SIL 1 72
8.6 Commissioning 73
8.6.1 General wiring instructions 73
8.6.2 Checklist for commissioning 73
8.7 Parameters and fault tracing 74
8.8 Maintenance and diagnostics 74

1. SAFETY

This manual contains clearly marked warning information which is intended for your personal safety and to avoid any unintentional damage to the product or connected appliances.

Please read the warning information carefully.

VACON® 20 X is a drive designed to control asynchronous AC motors and permanent magnet motors. The product is intended to be installed in a restricted access location and for a general purpose use.

Only Vacon authorized, trained and qualified personnel are allowed to install, operate and maintain the drive.

1.1 SIGNS

The cautions and warnings are marked as follows:

	= DANGEROUS VOLTAGE!
	= HOT SURFACE!
	= WARNING or CAUTION

Table 1. Warning signs.

1.2 UNITS

The dimensions used in this manual conform to International Metric System units, otherwise known as SI (Système International d'Unités) units. For the purpose of the equipment's UL certification, some of these dimensions are accompanied by their imperial equivalents.

Physical dimension	SI value	US value	Conversion factor	US designation
length	1 mm	0.0394 inch	25.4	inch
Weight	1 kg	2.205 lb	0.4536	pound
Speed	1 min^{-1}	1 rpm	1	revolution per minute
Temperature	1 °C (T1)	33.8 °F (T2)	T2 = T1 x 9/5 + 32	Fahrenheit
Torque	1 Nm	8.851 lbf in	0.113	pound-force inches
Power	1 kW	1.341 HP	0.7457	horsepower

Table 2. Unit conversion table.

1.3 DANGER

	The **components of the power unit of** VACON® 20 X drives **are live** when the drive is connected to the mains potential. Coming into contact with this voltage is **extremely dangerous** and may cause death or severe injury.
	The **motor terminals (U, V, W) are live** when VACON® 20 X Drive is connected to the mains, even if the motor is not running.
	After disconnecting the AC drive from the mains, **wait** until the indicators on the keypad go out (if no keypad is attached, see the indicators on the cover). Wait an additional 30 seconds before starting any work on the connections of VACON® 20 X Drive. After expiration of this time, use measuring equipment to absolutely ensure that no voltage is present. **Always ensure absence of voltage before starting any electrical work!**
	The control I/O-terminals are isolated from the mains potential. However, the **I/O terminals may have a dangerous control voltage** present even when VACON® 20 X Drive is disconnected from the mains.
	During a coast stop (see the Application Manual), the motor is still generating voltage to the drive. Therefore, do not touch the components of the AC drive before the motor has completely stopped. Wait until the indicators on the keypad go out (if no keypad is attached, see the indicators on the cover). Wait an additional 30 seconds before starting any work on the drive.

1.4 HOT SURFACE WARNING

	The metal parts of the enclosure may exceed 70°C (158 °F). **Do not touch them to a high risk of being burn.**

1.5 WARNINGS

	VACON® 20 X AC drive is meant for **fixed installations only**.
	Only DVC A circuits (Decisive Voltage Class A, according to IEC 61800-5-1) are allowed to be connected to the control unit. This advice aims to protect both the drive and the client-application. Vacon is not responsible for direct or consequential damages resulting from unsafe connections of external circuits to the drive. See paragraph 1.7 for more details.
	Do not perform any measurements when the AC drive is connected to the mains.
	The **touch current** of VACON® 20 X drives exceeds 3.5mA AC. According to standard EN61800-5-1, **a reinforced protective ground connection** must be ensured. See paragraph 1.6.
	If the AC drive is used as a part of a machine, the **machine manufacturer is responsible** for providing the machine with a **supply disconnecting device** (EN 60204-1). See paragraph 4.1
	Only **spare parts** supplied by Vacon can be used.
	At power-up, power brake or fault reset, **the motor will start immediately** if the start signal is active, unless the pulse control for Start/Stop logic has been selected. Furthermore, the I/O functionalities (including start inputs) may change if parameters, applications or software are changed. Disconnect, therefore, the motor if an unexpected start can cause danger. This is valid only if STO inputs are energized. For prevention on unexpected restart, use appropriate safety relay connected to the STO inputs.
	The **motor starts automatically** after automatic fault reset if the autoreset function is activated. See the Application Manual for more detailed information. This is valid only if STO inputs are energized. For prevention on unexpected restart, use appropriate safety relay connected to the STO inputs.
	Before performing any measurement on the motor or the motor cable, disconnect the motor cable from the AC drive.
	Do not perform any voltage withstand test on any part of VACON® 20 X. The tests shall be performed according to a specific procedure. Ignoring this procedure may damage the product.
	Do not touch the components on the circuit boards. Static voltage discharge may damage the components.
	Check that the **EMC level** of the AC drive corresponds to the requirements of your supply network.
	In a domestic environment, this product may cause radio interference, in which case supplementary mitigation measures may be required.
	Optional keypad is IP66/Type 4X outdoor rated. Strong exposure to direct sunlight or to heavy temperatures might cause the degradation of display LCD.

1.6 EARTHING AND EARTH FAULT PROTECTION

CAUTION!

The VACON® 20 X AC drive must always be earthed with an earthing conductor connected to the earthing terminal marked with ⏚.

Since the touch current exceeds 3.5 mA AC, according to EN61800-5-1, the drive shall have a fixed connection and provision of an additional terminal for a second protective earthing conductor of the same cross-sectional area as the original protective earthing conductor.

Three connections are provided for: the ORIGINAL protective earthing conductor, the SECOND protective conductor and the MOTOR protective conductor.

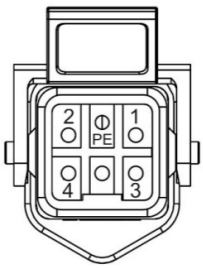

Mains supply / Type HAN Q5/0 (Male)	
Pin	**Function**
1	L1
2	L2
3	L3
4	-
5	-
PE	Protective Earth

Table 3. Mains supply connector, MU2 example, ORIGINAL Protective Earth.

Motor output / Type HAN Q8 (Female)	
Pin	**Function**
1	U
2	Not connected
3	W
4	Brake (-)
5	Temperature sensor (+)
6	Brake (+)
7	V
8	Temperature sensor (-)
PE	Protective Earth

Table 4. Motor supply connector, MU2 example, MOTOR Protective Earth.

See Chapter 4 for the location of all the ORIGINAL and MOTOR Protective Earth terminals.

The SECOND Protective Earth connection is located on the bottom side of the frequency converter, on the heatsink (Top side). This has to be connected before mounting the drive. See Figure 1 for the position of the SECOND Protective Earth connection.

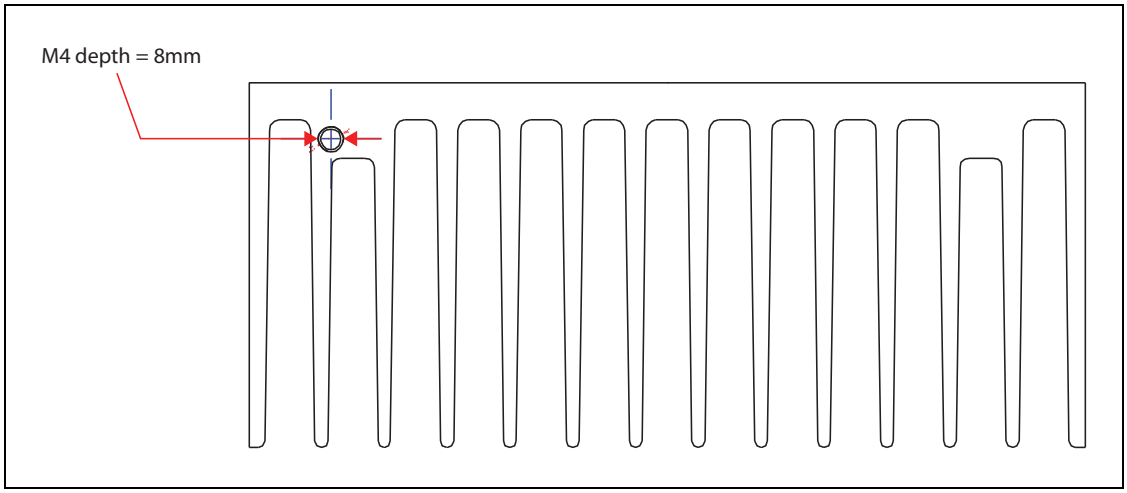

Figure 1. SECOND Protective Earth connection, MU2.

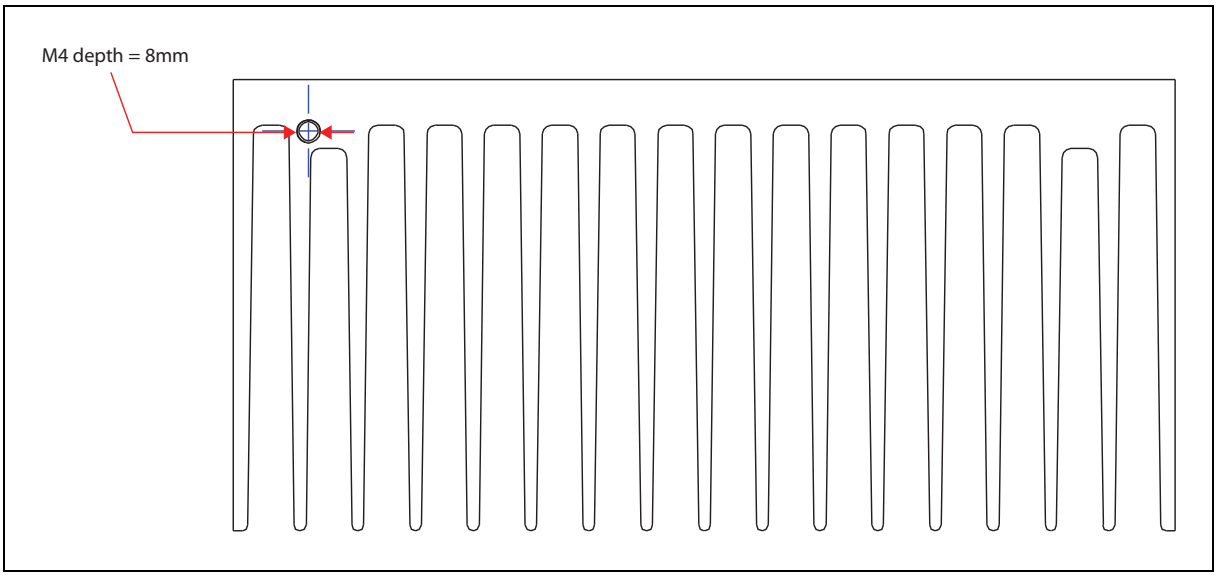

Figure 2. SECOND Protective Earth connection, MU3.

In VACON® 20 X, the phase conductor and the corresponding protective earthing conductor can be of the same cross-sectional area, provided they are made of the same metal (because the cross-sectional area of the phase conductor is less than 16 mm^2).

The cross-sectional area of every protective earthing conductor which does not form a part of the supply cable or cable enclosure shall, in any case, be not less than:

- 2.5 mm^2 if mechanical protection is provided or
- 4 mm^2 if mechanical protection is not provided. For cord-connected equipment, provisions shall be made so that the protective earthing conductor in the cord shall, in the case of failure of the strain-relief mechanism, be the last conductor to be interrupted.

However, always follow the local regulations for the minimum size of the protective earthing conductor.

NOTE: Due to the high capacitive currents present in the AC drive, fault current protective switches may not function properly.

1.7 INSULATION SYSTEM

Please, consider carefully the insulation system depicted in Figure 2, before connecting any circuit to the unit.

The control unit of VACON® 20 X fulfils the insulation requirements of the standard IEC 61800-5-1 regarding DVC A circuits and also the strongest insulation requirements of IEC 60950-1 regarding SELV circuits.

A distinction has to be made for the following three groups of terminals, according to the insulation system of VACON® 20 X with D-option:

- Mains and motor connections (L1, L2, L3, U, V, W), brake and thermistor input
- Control terminals (sensor inputs, Fieldbus, STO)

The Control terminals (sensor inputs, Fieldbus, STO) are isolated from the Mains (the insulation is reinforced, according to IEC 61800-5-1) and **the GND terminals are referred to PE**.

This is important when you need to connect other circuits to the drive and test the complete assembly. Should you have any doubts or questions, please contact your local Vacon distributor.

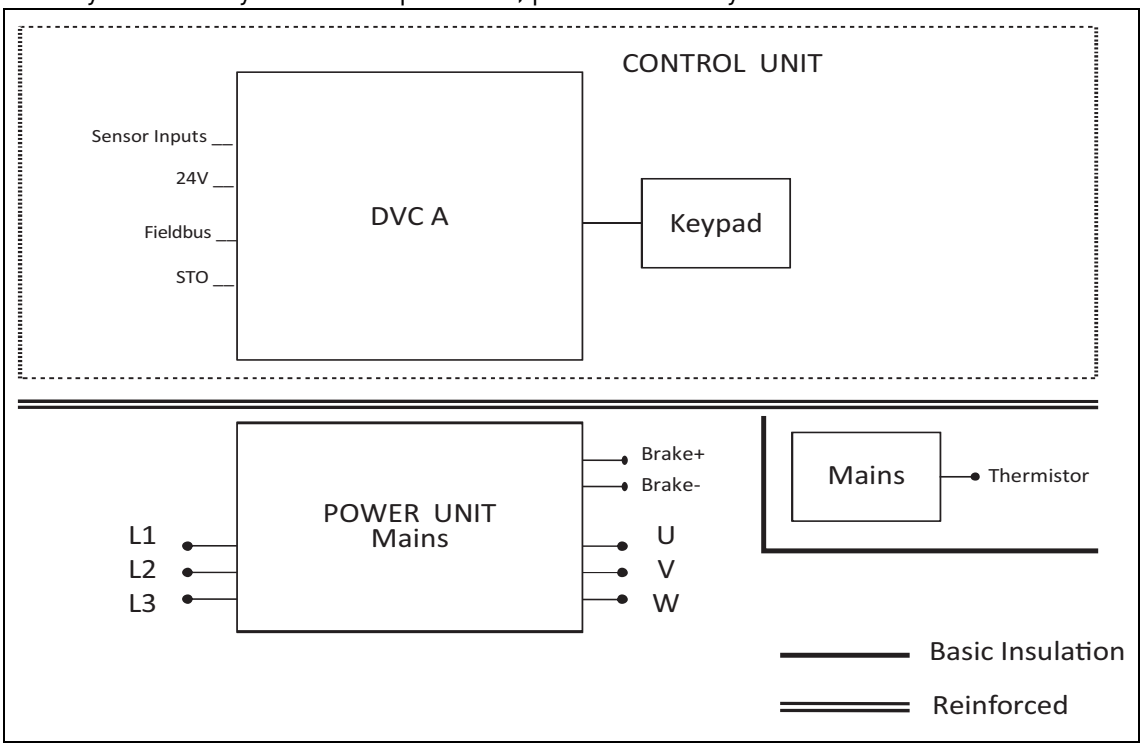

Figure 3. Insulation system.

By performing the cabling, a suitable clearance has to be guaranteed between DVC A circuits and Mains (reinforced insulation is required, according to IEC 61800-5-1).

1.8 COMPATIBILITY WITH RCDS

This product can cause a d.c. current in the protective earthing conductor. Where a residual current-operated protective (RCD) or monitoring (RCM) device is used for protection in case of direct or indirect contact, only an RCD or RCM of Type B is allowed on the supply side of this product.

1.9 EXTENDED TEMPERATURE RANGE

VACON® 20 X has **an integrated cooling system**, independent from the motor fan. Under maximum operating conditions, the ambient temperature cannot exceed **40 °C**. See Table 74 for the output rated current. Higher temperatures are allowed only with derating of the output current. With derating the unit can **operate up to 50°C**.

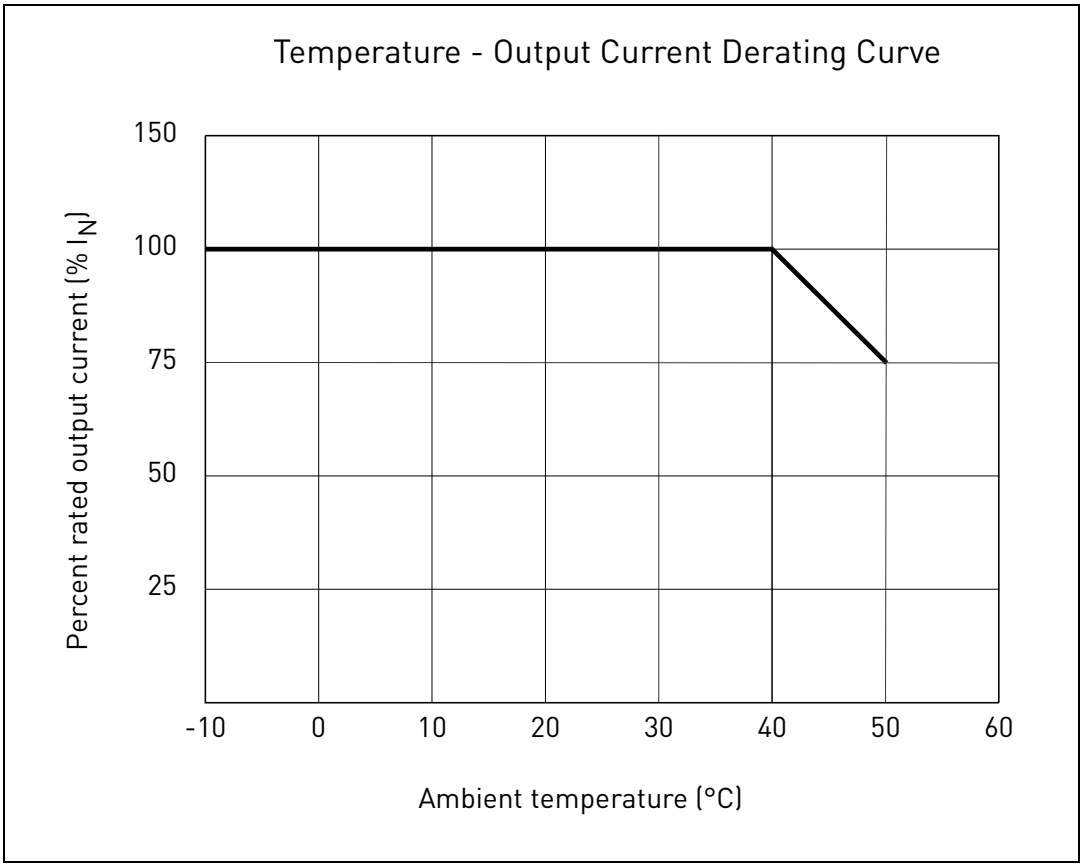

Figure 4.Temperature-output current derating curve.

The AC drive is cooled down by air-ventilation. Therefore, make sure that enough free space is left around the AC drive to ensure sufficient air circulation (see for more details the mounting instructions on chapter 3).

NOTE: Up to 1.5 kW (Voltage range 380-480V) the drive is not equipped with external cooling fan.

NOTE! You can download the English and French product manuals with applicable safety, warning and caution information from www.vacon.com/downloads.

REMARQUE Vous pouvez télécharger les versions anglaise et française des manuels produit contenant l'ensemble des informations de sécurité, avertissements et mises en garde applicables sur le site www.vacon.com/downloads.

2. RECEIPT OF DELIVERY

Check correctness of delivery by comparing your order data to the drive information found on the package label. If the delivery does not correspond to your order, contact your supplier immediately.

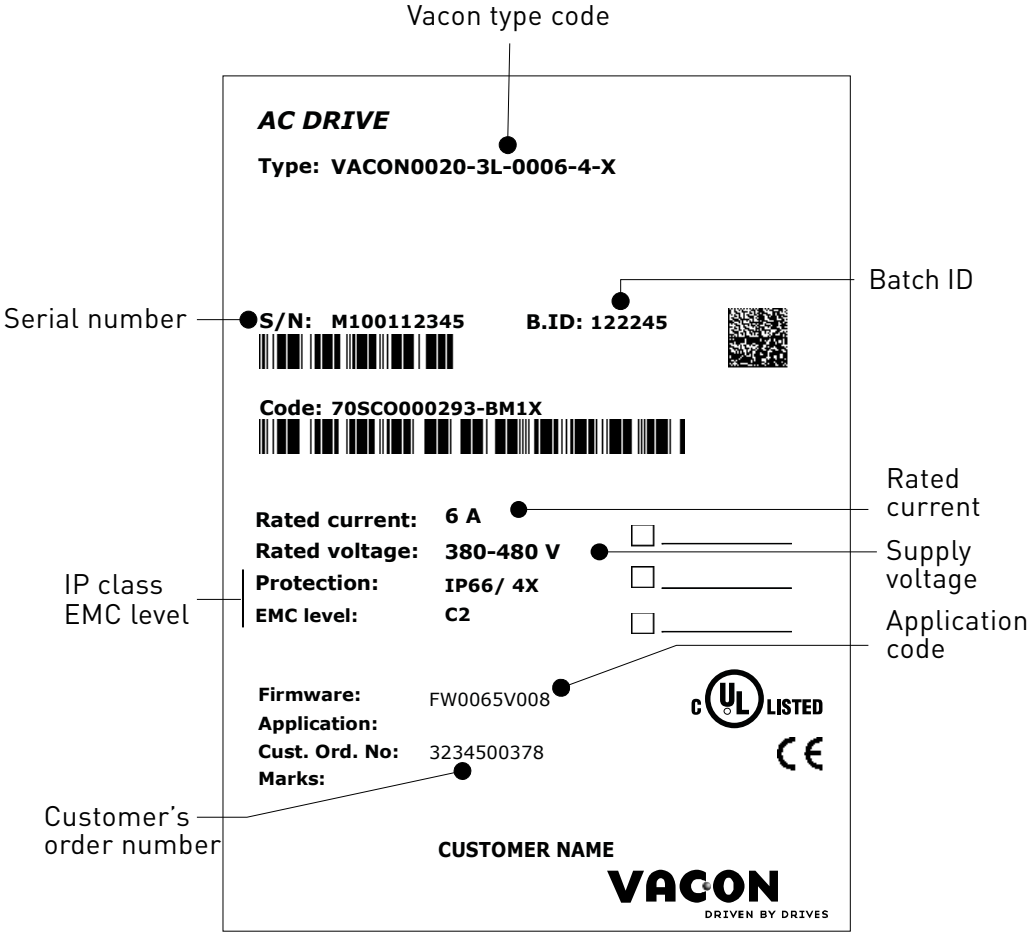

Figure 5. Vacon package label.

2.1 TYPE DESIGNATION CODE

VACON® type designation code is formed of a nine-segment code and optional +codes. Each segment of the type designation code uniquely corresponds to the product and options you have ordered. The format of the code is as follows:

VACON0020-3L-0009-4-X +xxxx +yyyy

VACON

This segment is common for all products.

0020

Product range:

0020 = Vacon 20

3L

Input/Function:

3L = Three-phase input

0009

Drive rating in ampere; e.g. 0009 = 9 A

See Table 74 for all the drive

ratings

4

Supply voltage:

4 = 380-480 V

X

- IP65

+xxxx +yyyy

Additional codes.

Examples of additional codes:

+HMTX

Text keypad IP66

+TQLA

Mains/Motor terminals

+TQLD

Desina connectors + PTC input + 400VAC brake control

+QDSA

Operator Panel

+QDSB

Operator Panel with potentiometer

2.2 ORDER CODES

The order codes for Vacon 20 X drive family are shown in the following table:

Frame size	Order code	Description
Supply voltage 3AC 380-480V		
MU2 with AS-interface	VACON0020-3L-0003-4-X+F0191+SEBK+DBIR+QDSB+TQLD	0.75 kW - 1.0 HP drive
	VACON0020-3L-0004-4-X+F0191+SEBK+DBIR+QDSB+TQLD	1.1 kW - 1.5 HP drive
	VACON0020-3L-0005-4-X+F0191+SEBK+DBIR+QDSB+TQLD	1.5 kW - 2.0 HP drive
	VACON0020-3L-0006-4-X+F0191+SEBK+DBIR+QDSB+TQLD	2.2 kW - 3.0 HP drive
	VACON0020-3L-0008-4-X+F0191+SEBK+DBIR+QDSB+TQLD	3.0 kW - 4.0 HP drive
MU3 with AS-interface	VACON0020-3L-0009-4-X+F0191+SEBK+QDSB+TQLD	4.0 kW - 5.0 HP drive
	VACON0020-3L-0012-4-X+F0191+SEBK+QDSB+TQLD	5.5 kW - 7.5 HP drive
	VACON0020-3L-0016-4-X+F0191+SEBK+QDSB+TQLD	7.5 kW - 10.0 HP drive
MU2 with Profibus	VACON0020-3L-0003-4-X+F0191+SEE3+DBIR+QDSB+TQLD	0.75 kW - 1.0 HP drive
	VACON0020-3L-0004-4-X+F0191+SEE3+DBIR+QDSB+TQLD	1.1 kW - 1.5 HP drive
	VACON0020-3L-0005-4-X+F0191+SEE3+DBIR+QDSB+TQLD	1.5 kW - 2.0 HP drive
	VACON0020-3L-0006-4-X+F0191+SEE3+DBIR+QDSB+TQLD	2.2 kW - 3.0 HP drive
	VACON0020-3L-0008-4-X+F0191+SEE3+DBIR+QDSB+TQLD	3.0 kW - 4.0 HP drive
MU3 with Profibus	VACON0020-3L-0009-4-X+F0191+SEE3+QDSB+TQLD	4.0 kW - 5.0 HP drive
	VACON0020-3L-0012-4-X+F0191+SEE3+QDSB+TQLD	5.5 kW - 7.5 HP drive
	VACON0020-3L-0016-4-X+F0191+SEE3+QDSB+TQLD	7.5 kW - 10.0 HP drive
MU2 with CanOpen	VACON0020-3L-0003-4-X+F0191+SEE6+DBIR+QDSB+TQLD	0.75 kW - 1.0 HP drive
	VACON0020-3L-0004-4-X+F0191+SEE6+DBIR+QDSB+TQLD	1.1 kW - 1.5 HP drive
	VACON0020-3L-0005-4-X+F0191+SEE6+DBIR+QDSB+TQLD	1.5 kW - 2.0 HP drive
	VACON0020-3L-0006-4-X+F0191+SEE6+DBIR+QDSB+TQLD	2.2 kW - 3.0 HP drive
	VACON0020-3L-0008-4-X+F0191+SEE6+DBIR+QDSB+TQLD	3.0 kW - 4.0 HP drive

Table 5. Order codes of Vacon 20 X.

Frame size	Order code	Description
MU3 with CanOpen	VACON0020-3L-0009-4-X+F0191+SEE6+QDSB+TQLD	4.0 kW - 5.0 HP drive
	VACON0020-3L-0012-4-X+F0191+SEE6+QDSB+TQLD	5.5 kW - 7.5 HP drive
	VACON0020-3L-0016-4-X+F0191+SEE6+QDSB+TQLD	7.5 kW - 10.0 HP drive
MU2 with Devicenet	VACON0020-3L-0003-4-X+F0191+SEE7+DBIR+QDSB+TQLD	0.75 kW - 1.0 HP drive
	VACON0020-3L-0004-4-X+F0191+SEE7+DBIR+QDSB+TQLD	1.1 kW - 1.5 HP drive
	VACON0020-3L-0005-4-X+F0191+SEE7+DBIR+QDSB+TQLD	1.5 kW - 2.0 HP drive
	VACON0020-3L-0006-4-X+F0191+SEE7+DBIR+QDSB+TQLD	2.2 kW - 3.0 HP drive
	VACON0020-3L-0008-4-X+F0191+SEE7+DBIR+QDSB+TQLD	3.0 kW - 4.0 HP drive
MU3 with Devicenet	VACON0020-3L-0009-4-X+F0191+SEE7+QDSB+TQLD	4.0 kW - 5.0 HP drive
	VACON0020-3L-0012-4-X+F0191+SEE7+QDSB+TQLD	5.5 kW - 7.5 HP drive
	VACON0020-3L-0016-4-X+F0191+SEE7+QDSB+TQLD	7.5 kW - 10.0 HP drive

Table 5. Order codes of Vacon 20 X.

For all technical details, see chapter 7.

2.3 UNPACKING AND LIFTING THE AC DRIVE

The weights of the AC drives vary according to frame size. Note the weights of each individual frame size in Table 6 below.

Frame	Weight	
	[kg]	[lb]
MU2	3.4	7.5
MU3	6.0	13.2

Table 6. Frame weights.

VACON® 20 X drives have undergone scrupulous tests and quality checks at the factory before they are delivered to the customer. However, after unpacking the product, check that no signs of transport damage are to be found on the product and that the delivery is complete.

Should the drive have been damaged during shipping, please contact the cargo insurance company or the carrier in the first instance.

2.3.1 DISPOSAL

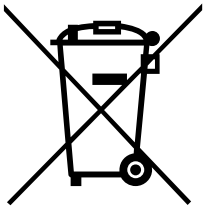	When the device reaches the end of its operating life do not dispose of it as a part of standard household garbage. Main components of the product can be recycled, but some need to be fragmented to separate different types of materials and components that need to be treated as special waste from electrical and electronic components. To ensure environmentally sound and safe recycling treatment, the product can be taken to appropriate recycling center or returned to the manufacturer. Observe local and other applicable laws as they may mandate special treatment for specific components or special treatment may be ecologically sensible.

3. MOUNTING

The AC drive **has to be mounted** on the wall or on the back plane of a cubicle. Ensure that the mounting plane is relatively even. Both frame sizes can be mounted in any position. The drive shall be fixed with four screws (or bolts, depending on the unit size).

3.1 DIMENSIONS

3.1.1 FRAME MU2 AND MU3

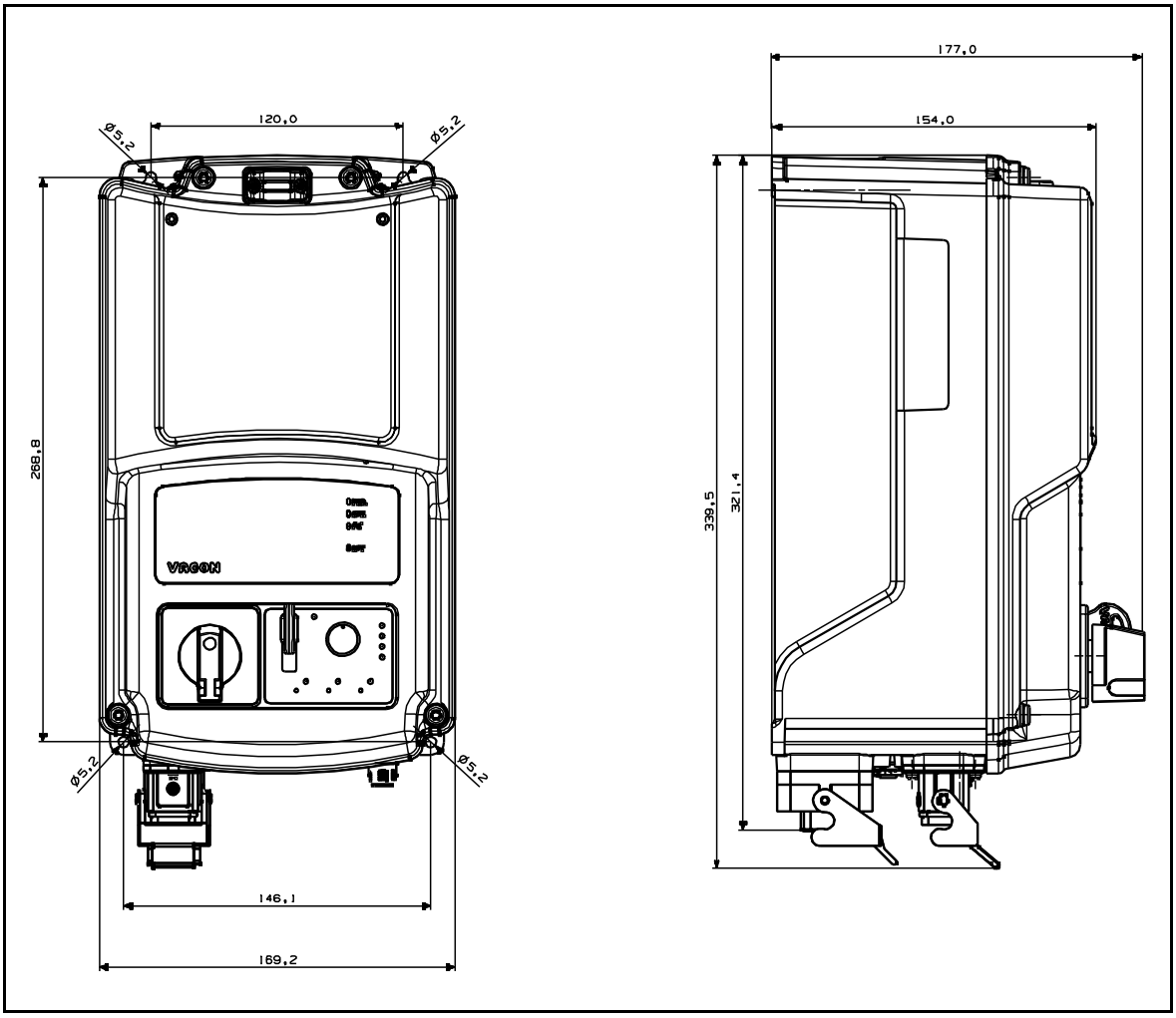

Figure 6. VACON® *20 X, MU2.*

Frame	Dimensions W x H x D	
	[mm]	[in]
MU2	169.2 x 339.5 x154.0	6.66 x 13.36 x 6.07
MU2 +HMTX	169.2 x 339.5 x175.7	6.66 x 13.36 x 6.92
MU2 +QDSB	169.2 x 339.5 x177	6.66 x 13.36 x 6.97

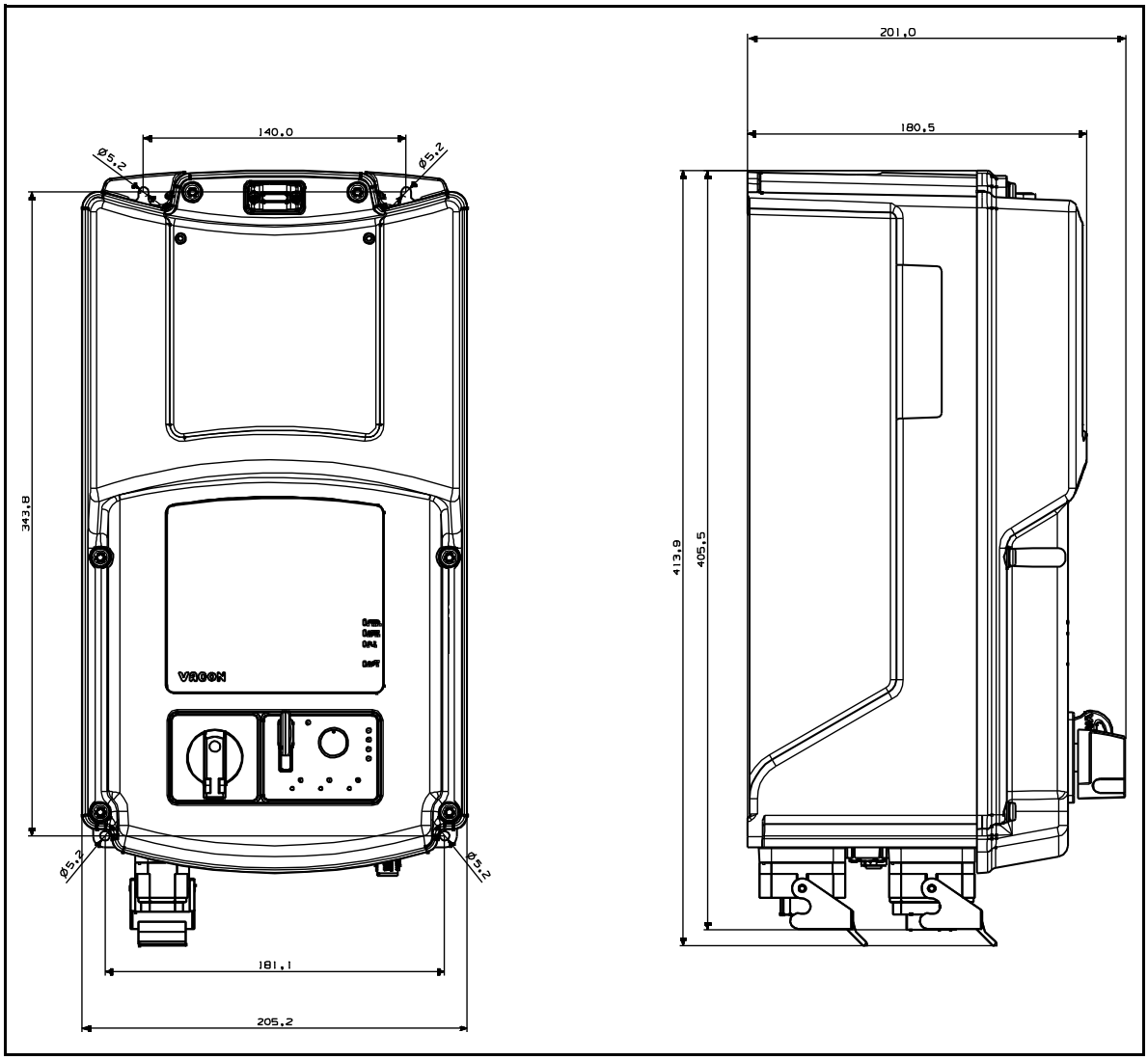

Figure 7. VACON® *20 X, MU3.*

Frame	Dimensions W x H x D	
	[mm]	[in]
MU3	205.2 x 413.9 x 180.5	8.08 x 16.29 x 7.11
MU3 +HMTX	205.2 x 413.9 x 202.1	8.08 x 16.29 x 7.96
MU3 +QDSB	205.2 x 413.9 x 201.0	8.08 x 16.29 x 7.90

The drive can be mounted in vertical or horizontal position on the wall or any other relatively even mounting plane or machine frame and fixed with the screws recommended in Table 7. Recommended screw or bolt size for MU2 and MU3 is M5.

Frame	Screw number	Screw size	Tightening torqe
MU2	4	M5	2.5 - 3 Nm
MU3	4	M5	2.5 - 3 Nm

Table 7. Screws for wall mounting.

3.2 COOLING

The AC drive produces heat in operation and is cooled down by air circulated by a fan. Enough free space shall be left around the AC drive to ensure sufficient air circulation and cooling. Different acts of maintenance may also require certain amount of free space.

The minimum clearances given in Table 8 should be respected. It is also important to ensure that the temperature of the cooling air does not exceed the maximum environment temperature of the converter.

Contact our factory for more information on required clearances in different installations.

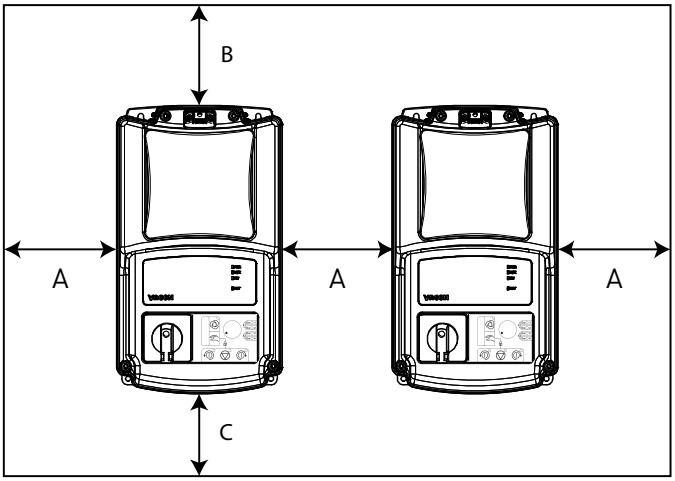

Min clearance [mm]			
Type	**A**	**B**	**C**
MU2	15	30	60
MU3	15	30	80

Table 8. Min. clearances around AC drive.

A = Clearance left and right from the drive
B = Clearance above the drive
C = Clearance underneath the AC drive

Figure 8. Installation space.

Type	Cooling air required [m^3/h]
MU2	50
MU3	110

Table 9. Required cooling air.

Note that if several units are mounted **above** each other the required free space equals B+C (see the Figure 9.). Moreover, the outlet air used for cooling by lower unit must be directed away from the air intake of the upper unit by means of e.g. a piece of metal plate fixed to the wall between the drives as shown in Figure 9..

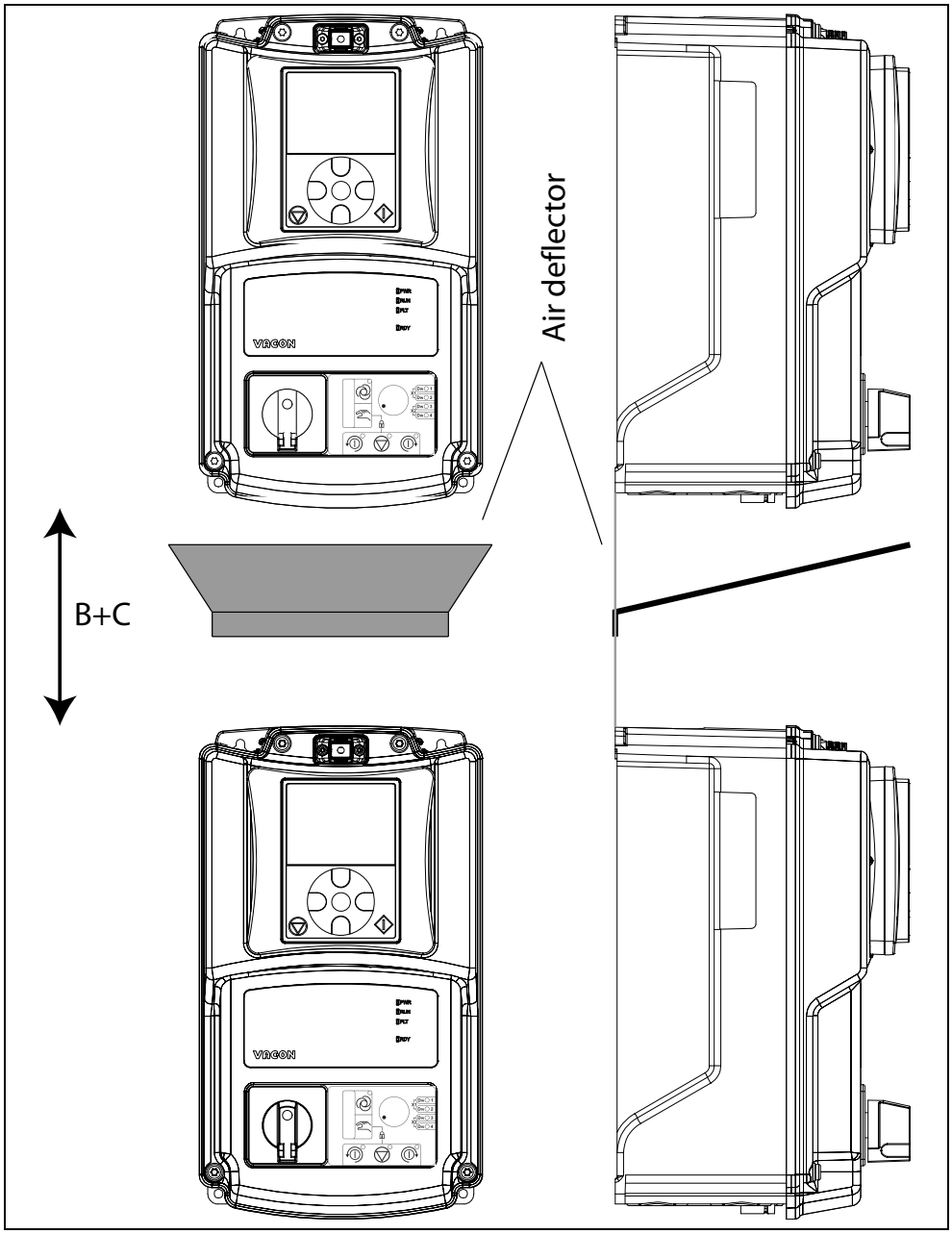

Figure 9. Installation space when drives are mounted on top of each other.

4. POWER CABLING

The mains cables are connected to terminals L1, L2 and L3 and the motor cables to terminals marked with U, V and W. See principal connection diagram in Figure 10. See also Table 10 for the cable recommendations for different EMC levels.

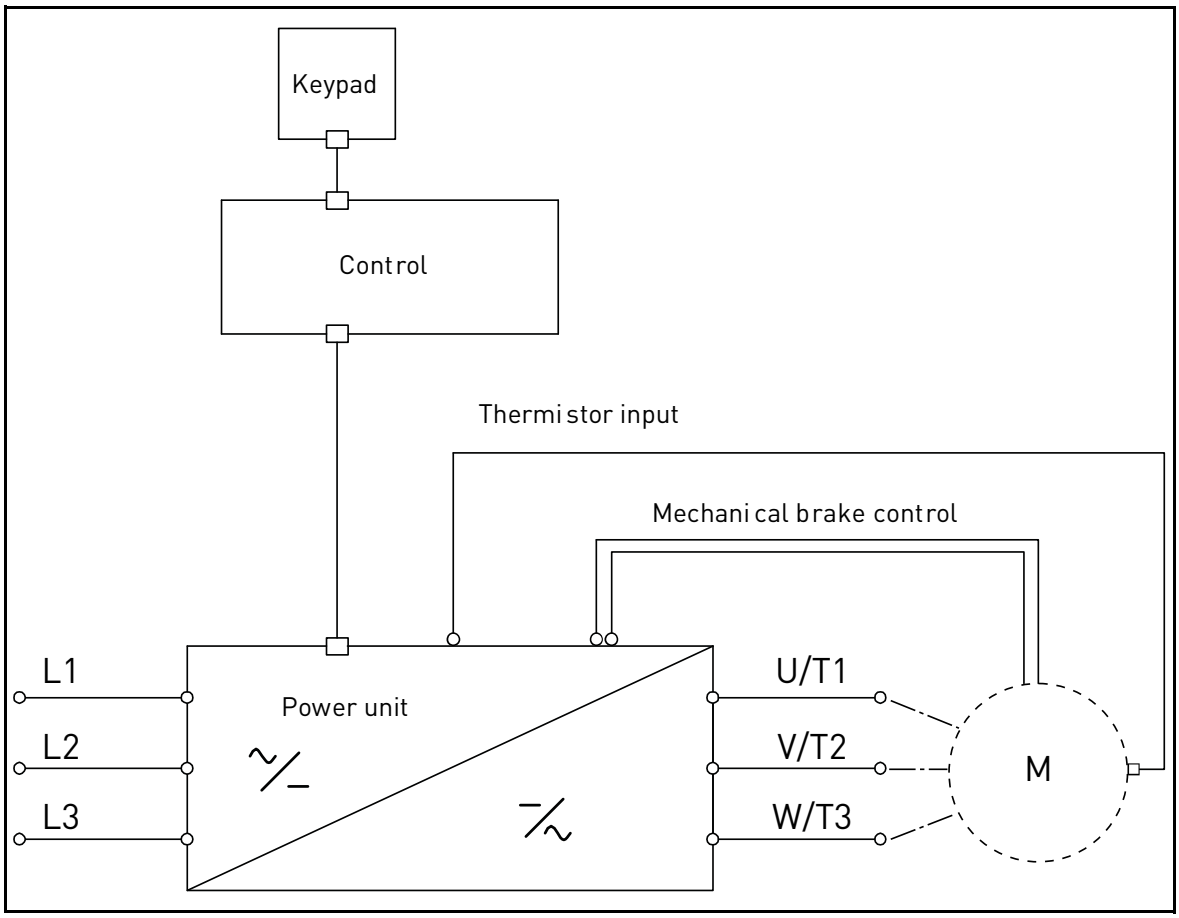

Figure 10. Principal connection diagram.

Use cables with heat resistance in accordance with the application requirements. The cables and the fuses must be dimensioned according to the AC drive nominal OUTPUT current which you can find on the rating plate.

Cable type	EMC levels	
	2nd environment	
	Category C3	Category C4
Mains cable	1	1
Motor cable	2	2
Control cable	3	3
Terminal Material	metallic	plastic

Table 10: Cable types required to meet standards.

1 = Power cable intended for fixed installation and the specific mains voltage. Shielded cable not required. (MCMK or similar recommended).
2 = Symmetrical power cable equipped with concentric protection wire and intended for the specific mains voltage. (MCMK or similar recommended). See Figure 11.
3 = Screened cable equipped with compact low-impedance shield (JAMAK, SAB/ÖZCuY-O or similar).

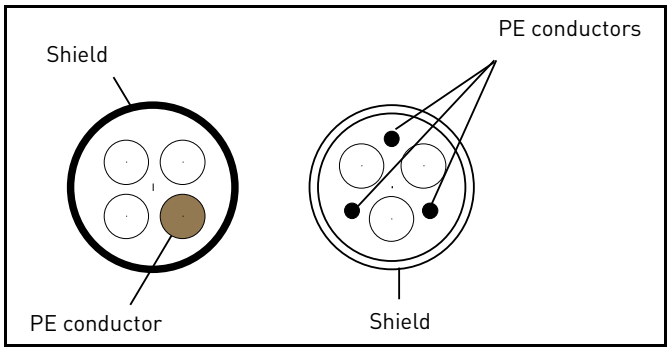

Figure 11.

NOTE: The EMC requirements are fulfilled at factory defaults of switching frequencies (all frames).
NOTE: If safety switch is connected the EMC protection shall be continuous over the whole cable installation.

4.1 CIRCUIT BREAKER

Please, disconnect the drive via an external circuit breaker. You have to provide a switching device between supply and main connection terminals.

When connecting the input terminals to the power supply using a circuit breaker, observe that this is of **type B or type C** and ensure it has a **capacity of 1.5 to 2 times of the inverter's rated current** (see Table 74).

NOTE: circuit breaker is not allowed in installations where C-UL is required. Only fuses are recommended.

4.2 UL STANDARDS ON CABLING

To meet the UL (Underwriters Laboratories) regulations, use a UL-approved copper cable with a minimum heat-resistance of +70/75°C. Use Class 1 wire only.

The units are suitable for use on a circuit capable of delivering no more than 50,000 rms symmetrical amperes, 600V AC maximum, when protected by T or J class fuses.

Integral solid state short circuit protection does not provide branch circuit protection. Branch circuit protection must be provided in accordance with the **National Electrical Code** and any additional local codes.

4.3 DESCRIPTION OF THE TERMINALS (20X D-OPTION WITH AS-I)

The following pictures describe the power and M12 connectors in Vacon 20X drives with D-option and AS-interface connection.

4.3.1 MU2 CONNECTIONS

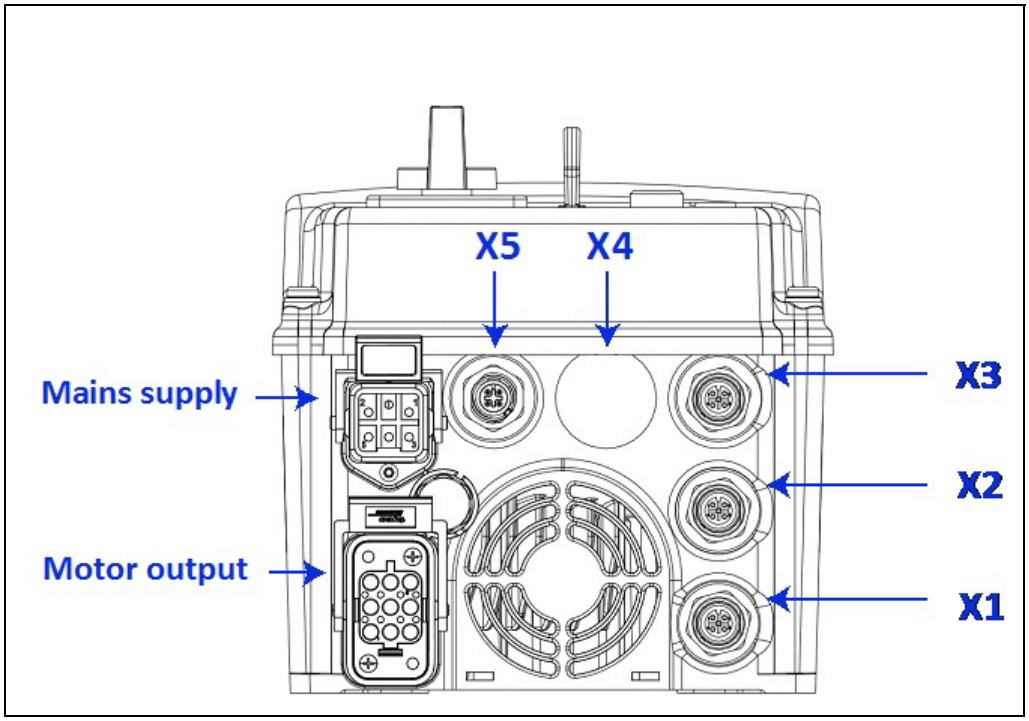

Figure 12. Power and control terminals in MU2.

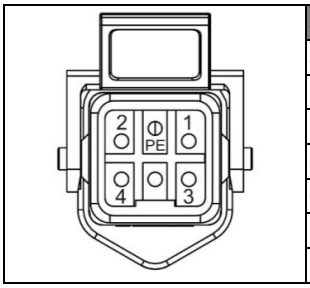

Mains supply / Type HAN Q5/0 (Male)	
Pin	**Function**
1	L1
2	L2
3	L3
4	-
5	-
PE	Protective Earth

Table 11. Mains supply connector, MU2.

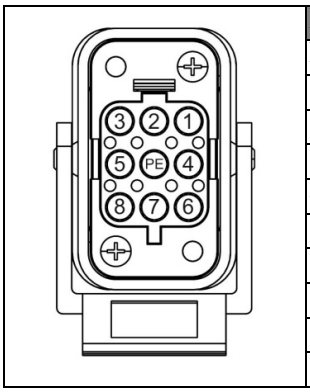

Motor output / Type HAN Q8 (Female)	
Pin	**Function**
1	U
2	Not connected
3	W
4	Brake (-)
5	Temperature sensor (+)
6	Brake (+)
7	V
8	Temperature sensor (-)
PE	Protective Earth

Table 12. Motor supply connector, MU2

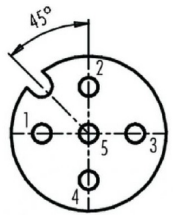

X1 Digital Input / Type M12 A-Coding – 5 pole (Female)	
Pin	**Function**
1	+24V (40mA max.)
2	Digital input 1
3	GND
4	Digital input 2
5	Functional Earth

Table 13. X1 connector, MU2.

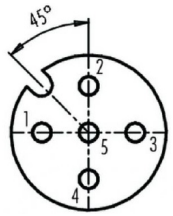

X2 Digital Input / Type M12 A-Coding – 5 pole (Female)	
Pin	**Function**
1	+24V (40mA max.)
2	Digital input 3
3	GND
4	Digital input 4
5	Functional Earth

Table 14. X2 connector, MU2.

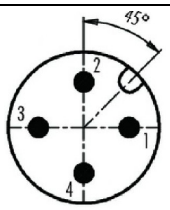

X3 ASi connections / Type M12 A-Coding – 4 pole (Male)	
Pin	**Function**
1	ASi +
2	-
3	ASi -
4	-

Table 15. AS-interface connector, MU2.

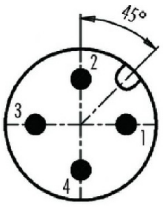

X5 External auxiliary power supply / Type M12 A-Coding – 4 pole (Male)	
Pin	**Function**
1	Power supply +24V
2	S1 - STO input +
3	Power supply GND
4	G1 - STO input -

Table 16. Auxiliary power supply connector, MU2.

4.3.2 MU3 CONNECTIONS

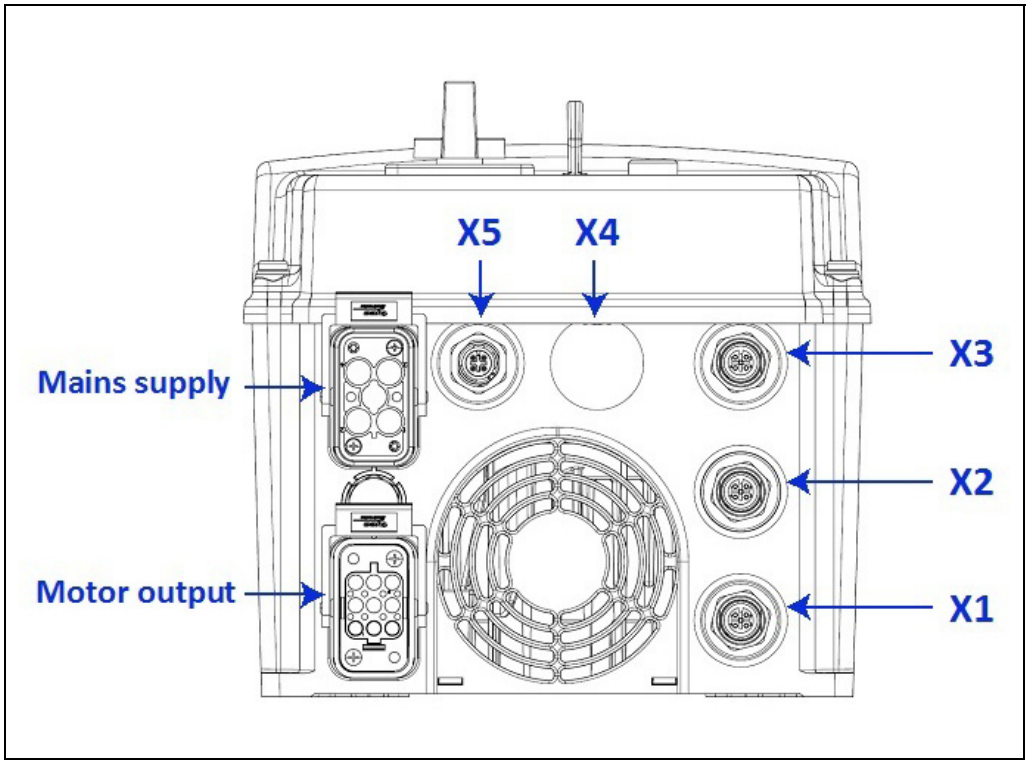

Figure 13. Power and control terminals in MU3.

	Mains supply / Type HAN Q4/2 (Male)	
	Pin	**Function**
	1	L1
	2	L2
	3	L3
	4	-
	11	-
	12	-
	PE	Protective Earth

Table 17. Mains supply connector, MU3.

	Motor output / Type HAN Q8 (Female)	
	Pin	**Function**
	1	U
	2	Not connected
	3	W
	4	Brake (-)
	5	Temperature sensor (+)
	6	Brake (+)
	7	V
	8	Temperature sensor (-)
	PE	Protective Earth

Table 18. Motor supply connector, MU3.

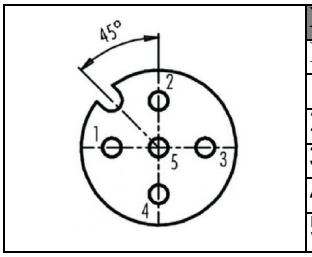

X1 Digital Input / Type M12 A-Coding – 5 pole (Female)	
Pin	**Function**
1	+24V (40mA max.)
2	Digital input 1
3	GND
4	Digital input 2
5	Functional Earth

Table 19. X1 connector, MU3.

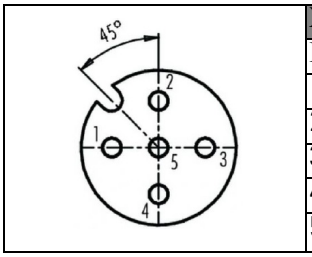

X2 Digital Input / Type M12 A-Coding – 5 pole (Female)	
Pin	**Function**
1	+24V (40mA max.)
2	Digital input 3
3	GND
4	Digital input 4
5	Functional Earth

Table 20. X2 connector, MU3.

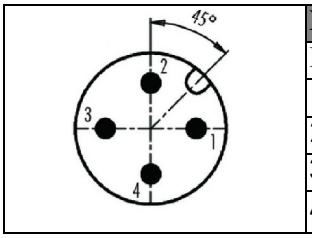

X3 ASi connections / Type M12 A-Coding – 4 pole (Male)	
Pin	**Function**
1	ASi +
2	
3	ASi -
4	

Table 21. AS-interface connector, MU3.

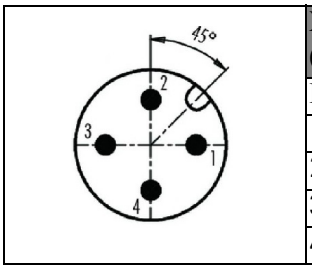

X5 External auxiliary power supply / Type M12 A-Coding – 4 pole (Male)	
Pin	**Function**
1	Power supply +24V
2	S1 - STO input +
3	Power supply GND
4	G1 - STO input -

Table 22. Auxiliary power supply connector, MU3.

4.4 DESCRIPTION OF THE TERMINALS (20X D-OPTION WITH PROFIBUS)

The following pictures describe the power and M12 connectors in Vacon 20X drives with D-option and Profibus connection.

4.4.1 MU2 CONNECTIONS

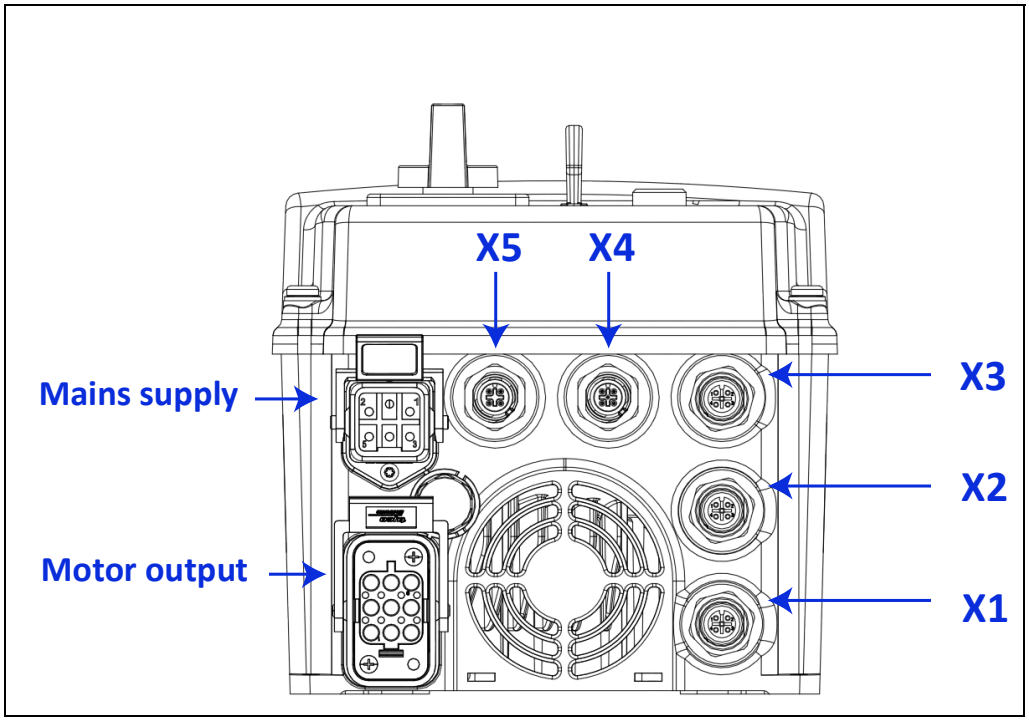

Figure 14. Power and control terminals in MU2.

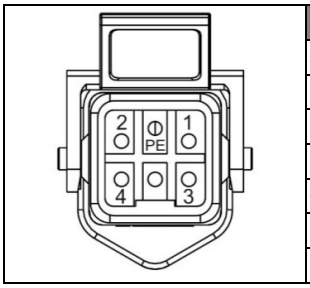

Mains supply / Type HAN Q5/0 (Male)	
Pin	**Function**
1	L1
2	L2
3	L3
4	-
5	-
PE	Protective Earth

Table 23. Mains supply connector, MU2.

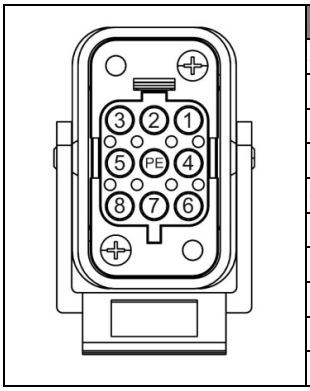

Motor output / Type HAN Q8 (Female)	
Pin	**Function**
1	U
2	Not connected
3	W
4	Brake (-)
5	Temperature sensor (+)
6	Brake (+)
7	V
8	Temperature sensor (-)
PE	Protective Earth

Table 24. Motor supply connector, MU2

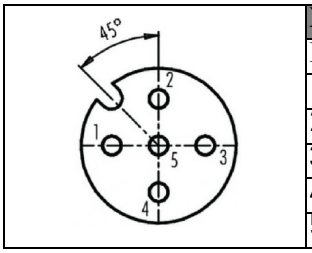

X1 Digital Input / Type M12 A-Coding – 5 pole (Female)	
Pin	**Function**
1	+24V (40mA max.)
2	Digital input 1
3	GND
4	Digital input 2
5	Functional Earth

Table 25. X1 connector, MU2.

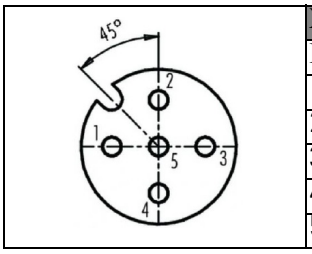

X2 Digital Input / Type M12 A-Coding – 5 pole (Female)	
Pin	**Function**
1	+24V (40mA max.)
2	Digital input 3
3	GND
4	Digital input 4
5	Functional Earth

Table 26. X2 connector, MU2.

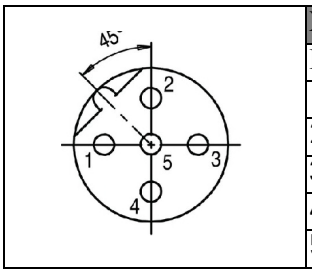

X3 Profibus / Type M12 B-Coding – 5 pole (Female)	
Pin	**Function**
1	+5V for bus termination
2	RxD/TxD-N, data minus, A wire (green)
3	GND
4	RxD/TxD-P,data plus, B wire (red)
5	-

Table 27. Profibus Female connector, MU2.

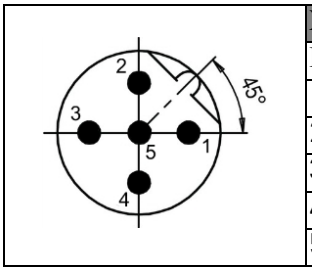

X4 Profibus / Type M12 B-Coding – 5 pole (Male)	
Pin	**Function**
1	+5V for bus termination
2	RxD/TxD-N, data minus, A wire (green)
3	GND
4	RxD/TxD-P,data plus, B wire (red)
5	-

Table 28. Profibus Male connector, MU2.

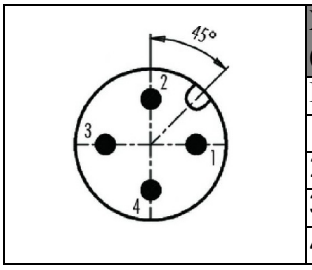

X5 External auxiliary power supply / Type M12 A-Coding – 4 pole (Male)	
Pin	**Function**
1	Power supply +24V
2	S1 - STO input +
3	Power supply GND
4	G1 - STO input -

Table 29. Auxiliary power supply connector, MU2.

4.4.2 MU3 CONNECTIONS

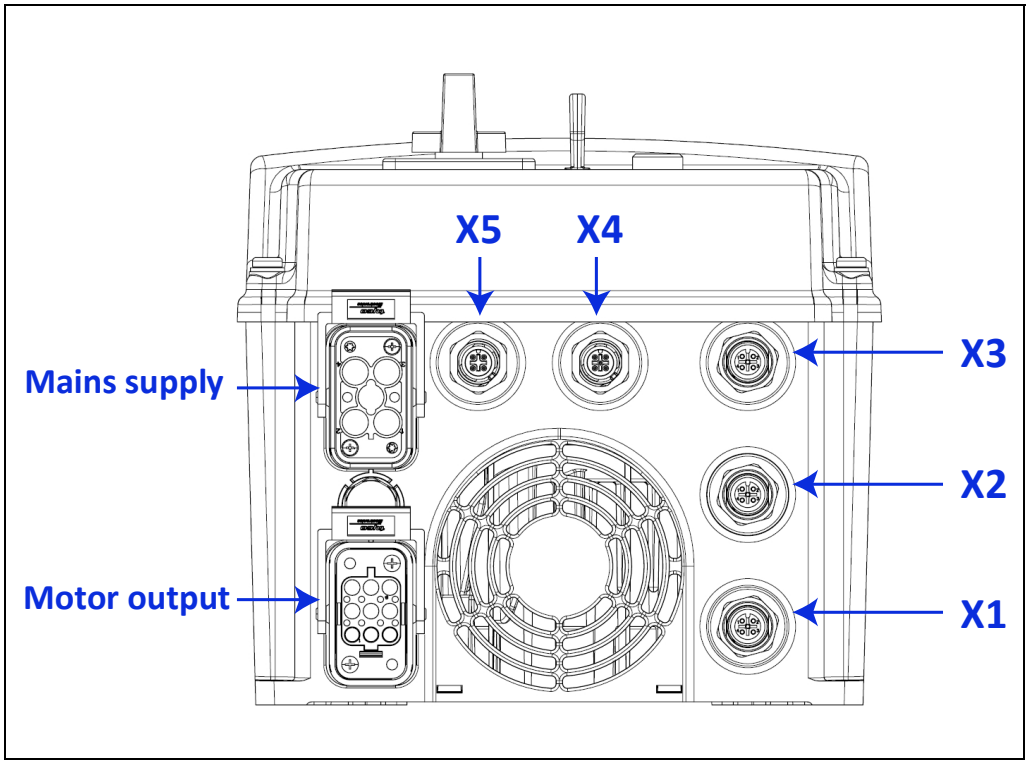

Figure 15. Power and control terminals in MU3.

	Mains supply / Type HAN Q4/2 (Male)	
	Pin	**Function**
	1	L1
	2	L2
	3	L3
	4	-
	11	-
	12	-
	PE	Protective Earth

Table 30. Mains supply connector, MU3.

	Motor output / Type HAN Q8 (Female)	
	Pin	**Function**
	1	U
	2	Not connected
	3	W
	4	Brake (-)
	5	Temperature sensor (+)
	6	Brake (+)
	7	V
	8	Temperature sensor (-)
	PE	Protective Earth

Table 31. Motor supply connector, MU3.

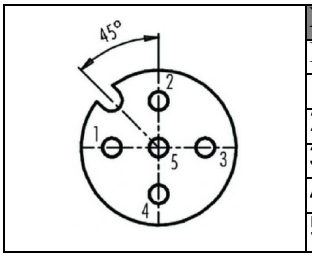

X1 Digital Input / Type M12 A-Coding – 5 pole (Female)	
Pin	**Function**
1	+24V (40mA max.)
2	Digital input 1
3	GND
4	Digital input 2
5	Functional Earth

Table 32. X1 connector, MU3.

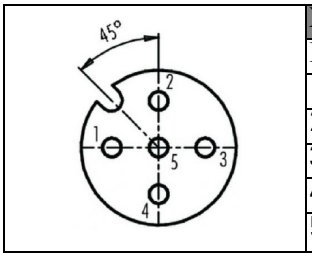

X2 Digital Input / Type M12 A-Coding – 5 pole (Female)	
Pin	**Function**
1	+24V (40mA max.)
2	Digital input 3
3	GND
4	Digital input 4
5	Functional Earth

Table 33. X2 connector, MU3.

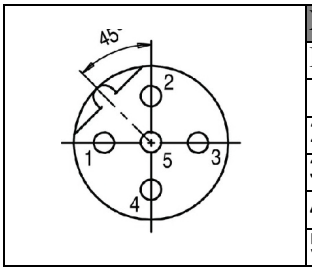

X3 Profibus / Type M12 B-Coding – 5 pole (Female)	
Pin	**Function**
1	+5V for bus termination
2	RxD/TxD-N, data minus, A wire (green)
3	GND
4	RxD/TxD-P,data plus, B wire (red)
5	-

Table 34. Profibus Female connector, MU3.

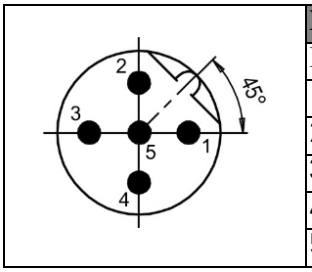

X4 Profibus / Type M12 B-Coding – 5 pole (Male)	
Pin	**Function**
1	+5V for bus termination
2	RxD/TxD-N, data minus, A wire (green)
3	GND
4	RxD/TxD-P,data plus, B wire (red)
5	-

Table 35. Profibus Male connector, MU3.

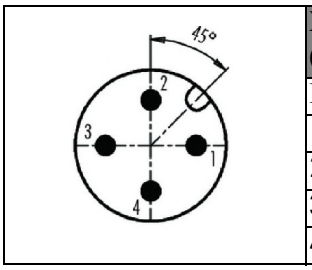

X5 External auxiliary power supply / Type M12 A-Coding – 4 pole (Male)	
Pin	**Function**
1	Power supply +24V
2	S1 - STO input +
3	Power supply GND
4	G1 - STO input -

Table 36. Auxiliary power supply connector, MU3.

4.5 DESCRIPTION OF THE TERMINALS (20X D-OPTION WITH CANOPEN)

The following pictures describe the power and M12 connectors in Vacon 20X drives with D-option and CanOpen connection.

4.5.1 MU2 CONNECTIONS

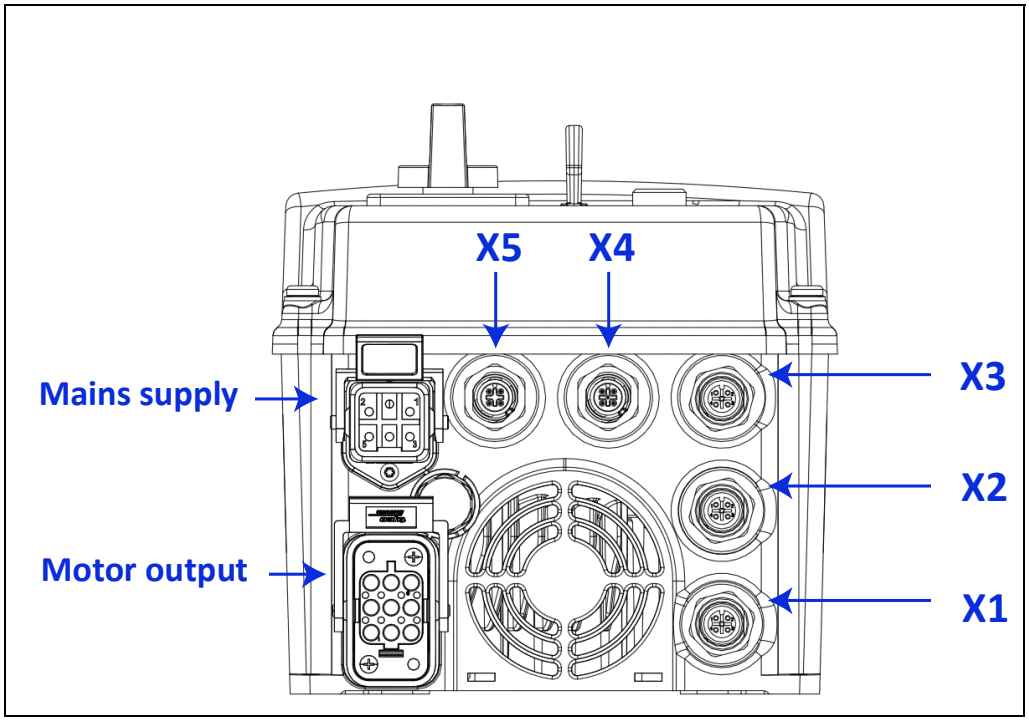

Figure 16. Power and control terminals in MU2.

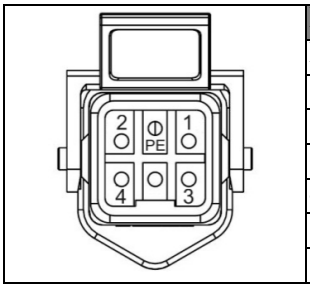

Mains supply / Type HAN Q5/0 (Male)	
Pin	**Function**
1	L1
2	L2
3	L3
4	-
5	-
PE	Protective Earth

Table 37. Mains supply connector, MU2.

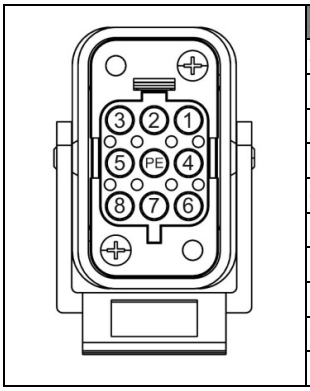

Motor output / Type HAN Q8 (Female)	
Pin	**Function**
1	U
2	Not connected
3	W
4	Brake (-)
5	Temperature sensor (+)
6	Brake (+)
7	V
8	Temperature sensor (-)
PE	Protective Earth

Table 38. Motor supply connector, MU2

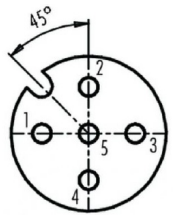

X1 Digital Input / Type M12 A-Coding – 5 pole (Female)	
Pin	**Function**
1	+24V (40mA max.)
2	Digital input 1
3	GND
4	Digital input 2
5	Functional Earth

Table 39. X1 connector, MU2.

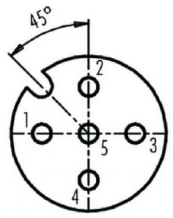

X2 Digital Input / Type M12 A-Coding – 5 pole (Female)	
Pin	**Function**
1	+24V (40mA max.)
2	Digital input 3
3	GND
4	Digital input 4
5	Functional Earth

Table 40. X2 connector, MU2.

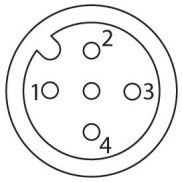

X3 CanOpen / Type M12 A-Coding – 5 pole (Female)	
Pin	**Function**
1	Drain(Shield)
2	V+
3	V-
4	CAN_H
5	CAN_L

Table 41. CanOpen Female connector, MU2.

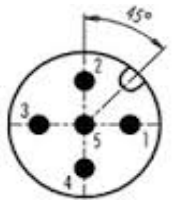

X4 CanOpen / Type M12 A-Coding – 5 pole (Male)	
Pin	**Function**
1	Drain (Shield)
2	V+
3	V-
4	CAN_H
5	CAN_L

Table 42. CanOpen Male connector, MU2.

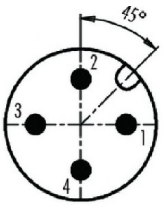

X5 External auxiliary power supply / Type M12 A-Coding – 4 pole (Male)	
Pin	**Function**
1	Power supply +24V
2	S1 - STO input +
3	Power supply GND
4	G1 - STO input -

Table 43. Auxiliary power supply connector, MU2.

4.5.2 MU3 CONNECTIONS

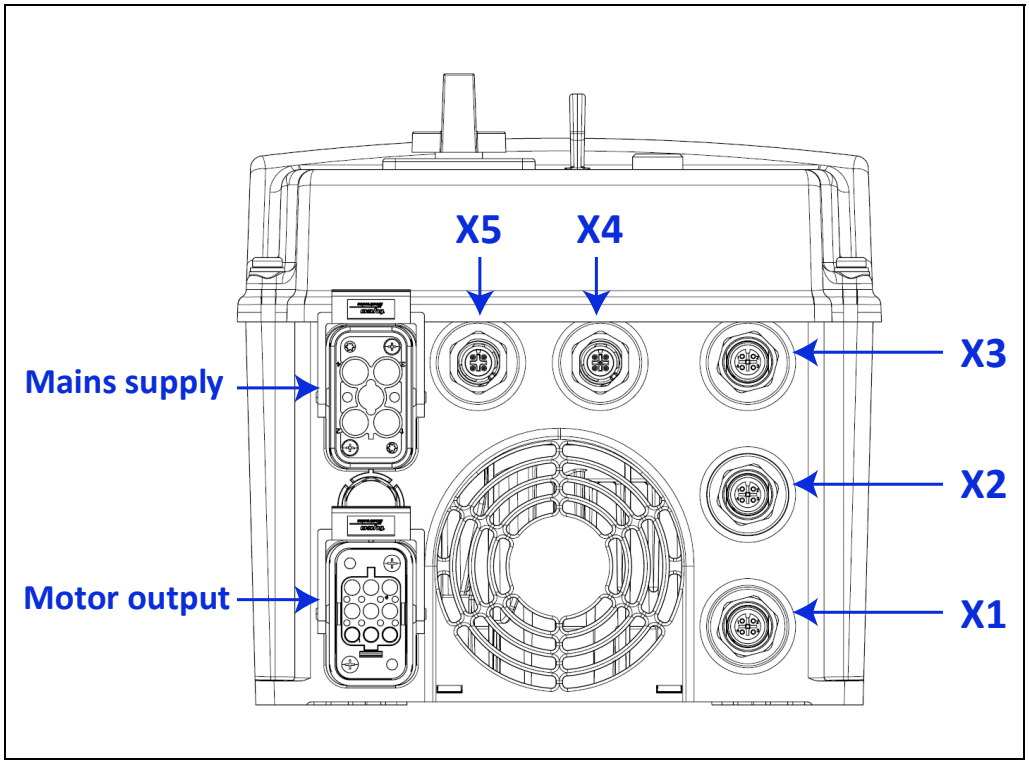

Figure 17. Power and control terminals in MU3.

	Mains supply / Type HAN Q4/2 (Male)	
	Pin	**Function**
	1	L1
	2	L2
	3	L3
	4	-
	11	-
	12	-
	PE	Protective Earth

Table 44. Mains supply connector, MU3.

	Motor output / Type HAN Q8 (Female)	
	Pin	**Function**
	1	U
	2	Not connected
	3	W
	4	Brake (-)
	5	Temperature sensor (+)
	6	Brake (+)
	7	V
	8	Temperature sensor (-)
	PE	Protective Earth

Table 45. Motor supply connector, MU3.

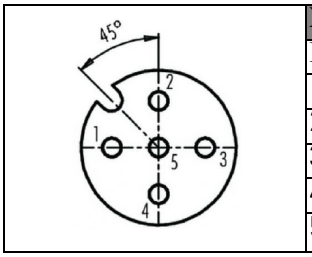

X1 Digital Input / Type M12 A-Coding – 5 pole (Female)	
Pin	**Function**
1	+24V (40mA max.)
2	Digital input 1
3	GND
4	Digital input 2
5	Functional Earth

Table 46. X1 connector, MU3.

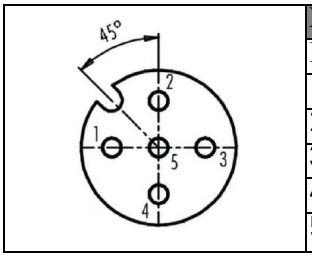

X2 Digital Input / Type M12 A-Coding – 5 pole (Female)	
Pin	**Function**
1	+24V (40mA max.)
2	Digital input 3
3	GND
4	Digital input 4
5	Functional Earth

Table 47. X2 connector, MU3.

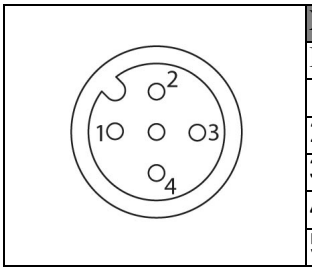

X3 CanOpen / Type M12 A-Coding – 5 pole (Female)	
Pin	**Function**
1	Drain(Shield)
2	V+
3	V-
4	CAN_H
5	CAN_L

Table 48. CanOpen Female connector, MU3.

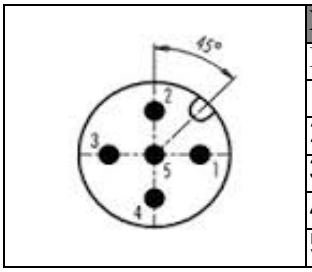

X4 CanOpen / Type M12 A-Coding – 5 pole (Male)	
Pin	**Function**
1	Drain(Shield)
2	V+
3	V-
4	CAN_H
5	CAN_L

Table 49. CanOpen Male connector, MU3.

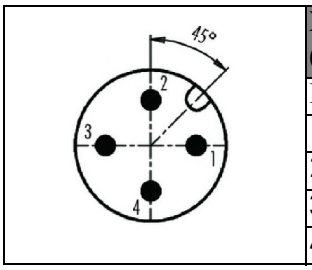

X5 External auxiliary power supply / Type M12 A-Coding – 4 pole (Male)	
Pin	**Function**
1	Power supply +24V
2	S1 - STO input +
3	Power supply GND
4	G1 - STO input -

Table 50. Auxiliary power supply connector, MU3.

4.6 DESCRIPTION OF THE TERMINALS (20X D-OPTION WITH DEVICENET)

The following pictures describe the power and M12 connectors in Vacon 20X drives with D-option and Devicenet connection.

4.6.1 MU2 CONNECTIONS

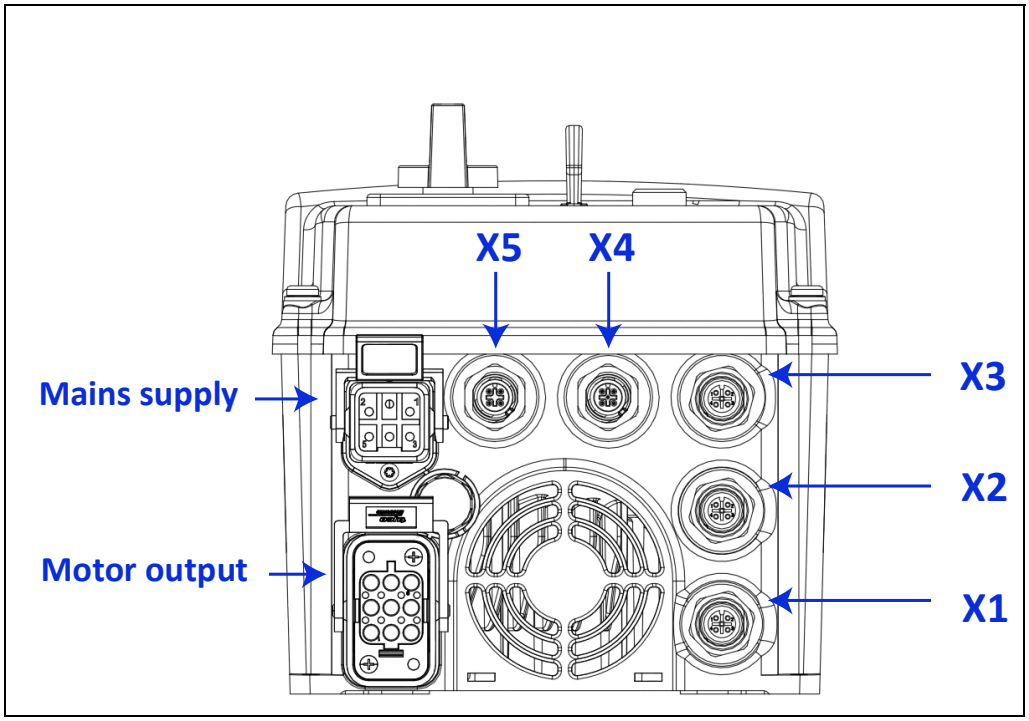

Figure 18. Power and control terminals in MU2.

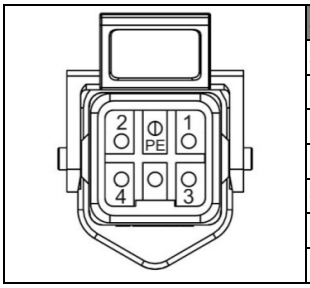

Mains supply / Type HAN Q5/0 (Male)	
Pin	**Function**
1	L1
2	L2
3	L3
4	-
5	-
PE	Protective Earth

Table 51. Mains supply connector, MU2.

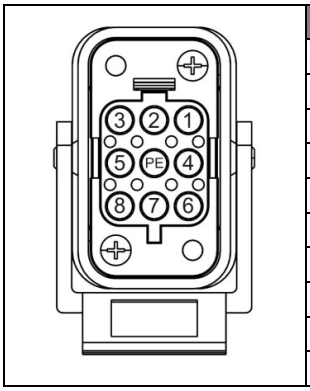

Motor output / Type HAN Q8 (Female)	
Pin	**Function**
1	U
2	Not connected
3	W
4	Brake (-)
5	Temperature sensor (+)
6	Brake (+)
7	V
8	Temperature sensor (-)
PE	Protective Earth

Table 52. Motor supply connector, MU2

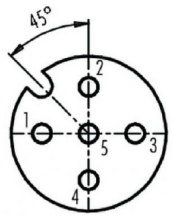

X1 Digital Input / Type M12 A-Coding – 5 pole (Female)	
Pin	**Function**
1	+24V (40mA max.)
2	Digital input 1
3	GND
4	Digital input 2
5	Functional Earth

Table 53. X1 connector, MU2.

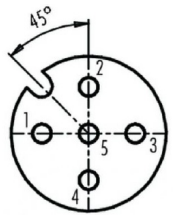

X2 Digital Input / Type M12 A-Coding – 5 pole (Female)	
Pin	**Function**
1	+24V (40mA max.)
2	Digital input 3
3	GND
4	Digital input 4
5	Functional Earth

Table 54. X2 connector, MU2.

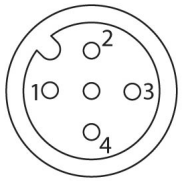

X3 Devicenet / Type M12 A-Coding – 5 pole (Female)	
Pin	**Function**
1	Drain
2	V+
3	V-
4	CAN_H
5	CAN_L

Table 55. Devicenet Female connector, MU2.

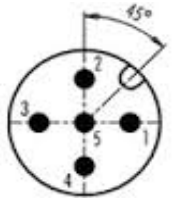

X4 Devicenet / Type M12 A-Coding – 5 pole (Male)	
Pin	**Function**
1	Drain
2	V+
3	V-
4	CAN_H
5	CAN_L

Table 56. Devicenet Male connector, MU2.

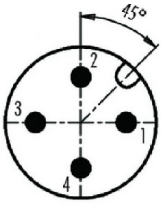

X5 External auxiliary power supply / Type M12 A-Coding – 4 pole (Male)	
Pin	**Function**
1	Power supply +24V
2	S1 - STO input +
3	Power supply GND
4	G1 - STO input -

Table 57. Auxiliary power supply connector, MU2.

4.6.2 MU3 CONNECTIONS

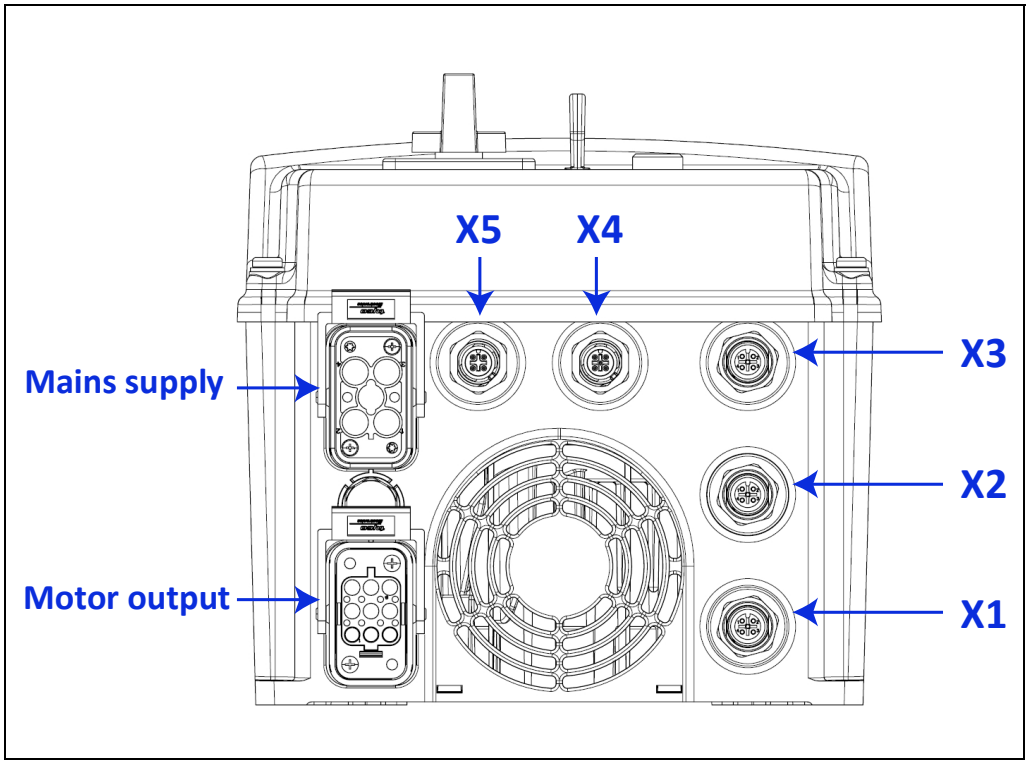

Figure 19. Power and control terminals in MU3.

	Mains supply / Type HAN Q4/2 (Male)	
	Pin	**Function**
	1	L1
	2	L2
	3	L3
	4	-
	11	-
	12	-
	PE	Protective Earth

Table 58. Mains supply connector, MU3.

	Motor output / Type HAN Q8 (Female)	
	Pin	**Function**
	1	U
	2	Not connected
	3	W
	4	Brake (-)
	5	Temperature sensor (+)
	6	Brake (+)
	7	V
	8	Temperature sensor (-)
	PE	Protective Earth

Table 59. Motor supply connector, MU3.

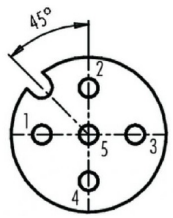

X1 Digital Input / Type M12 A-Coding – 5 pole (Female)	
Pin	**Function**
1	+24V (40mA max.)
2	Digital input 1
3	GND
4	Digital input 2
5	Functional Earth

Table 60. X1 connector, MU3.

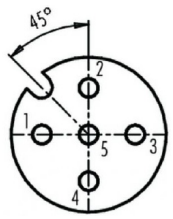

X2 Digital Input / Type M12 A-Coding – 5 pole (Female)	
Pin	**Function**
1	+24V (40mA max.)
2	Digital input 3
3	GND
4	Digital input 4
5	Functional Earth

Table 61. X2 connector, MU3.

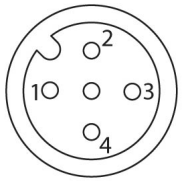

X3 Devicenet / Type M12 A-Coding – 5 pole (Female)	
Pin	**Function**
1	Drain
2	V+
3	V-
4	CAN_H
5	CAN_L

Table 62. Devicenet Female connector, MU3.

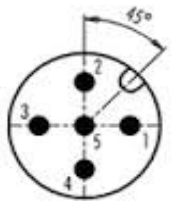

X4 Devicenet / Type M12 A-Coding – 5 pole (Male)	
Pin	**Function**
1	Drain
2	V+
3	V-
4	CAN_H
5	CAN_L

Table 63. Devicenet Male connector, MU3.

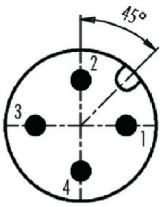

X5 External auxiliary power supply / Type M12 A-Coding – 4 pole (Male)	
Pin	**Function**
1	Power supply +24V
2	S1 - STO input +
3	Power supply GND
4	G1 - STO input -

Table 64. Auxiliary power supply connector, MU3.

4.7 CABLE DIMENSIONING AND SELECTION

Table 65 shows the minimum dimensions of the Cu cables and the corresponding fuse sizes.

These instructions apply only to cases with one motor and one cable connection from the AC drive to the motor. In any other case, ask the factory for more information.

4.7.0.1 CABLE AND FUSE SIZES, FRAMES MU2 AND MU3

The recommended fuse types are gG/gL (IEC 60269-1). The fuse voltage rating should be selected according to the supply network. The final selection should be made according to local regulations, cable installation conditions and cable specifications. Bigger fuses than those recommended below shall not be used.

Check that the fuse operating time is less than 0.4 seconds. Operating time depends on used fuse type and impedance of the supply circuit. Consult the factory about faster fuses. Vacon also recommends for high speed gS (IEC 60269-4) fuse ranges.

Frame	Type	I_{INPUT} [A]	Fuse (gG/gL) [A]	Mains and motor cable Cu [mm^2]
MU2	0003 4 - 0004 4	3.2 - 4.0	6	3*1.5+1.5
	0005 4 - 0006 4	5.6 - 7.3	10	3*1.5+1.5
	0008 4	9.6	10	3*2.5+2.5
MU3	0009 4	11.5	16	3*2.5+2.5
	0012 4	14.9	20	3*4+4
	0016 4	20.0	25	3*6+6

Table 65. Cable and fuse sizes for VACON® *20 X.*

The cable dimensioning is based on the criteria of the International Standard **IEC60364-5-52**: Cables must be PVC-isolated; use only cables with concentric copper shield; Max number of parallel cables is 9.

When using cables in parallel, **NOTE HOWEVER** that the requirements of both the cross-sectional area and the max number of cables must be observed.
For important information on the requirements of the earthing conductor, see chapter Earthing and earth fault protection of the standard.

For the correction factors for each temperature, see International Standard **IEC60364-5-52**.

4.7.0.2 Cable and fuse sizes, frames MU2 and MU3, North America

The recommended fuse types are class T (UL & CSA). The fuse voltage rating should be selected according to the supply network. The final selection should be made according to local regulations, cable installation conditions and cable specifications. Bigger fuses than those recommended below shall not be used.

Check that the fuse operating time is less than 0.4 seconds. Operating time depends on used fuse type and impedance of the supply circuit. Consult the factory about faster fuses. Vacon also recommends for high speed J (UL & CSA) fuse ranges.

Frame	Type	I_{INPUT} [A]	Fuse (class T) [A]	Mains and motor cable Cu
MU2	0003 4 - 0004 4	3.2 - 4.0	6	AWG14
	0005 4 - 0006 4	5.6 - 7.3	10	AWG14
	0008 4	9.6	10	AWG14
MU3	0009 4	11.5	15	AWG14
	0012 4	14.9	20	AWG12
	0016 4	20.0	25	AWG10

Table 66. Cable and fuse sizes for VACON® *20 X, North America.*

The cable dimensioning is based on the criteria of the **Underwriters' Laboratories UL508C**:Cables must be PVC-isolated; Max ambient temperature +40 °C (104 °F), max temperature of cable surface +70/+75 °C (158/167 °F); Use only cables with concentric copper shield; Max number of parallel cables is 9.

When using cables in parallel, **NOTE HOWEVER** that the requirements of both the cross-sectional area and the max number of cables must be observed.
For important information on the requirements of the earthing conductor, see standard Underwriters' Laboratories UL508C.

For the correction factors for each temperature, see the instructions of standard **Underwriters' Laboratories UL508C**.

4.8 RECOMMENDED PLUG TERMINALS AND CABLE DIMENSIONS

4.8.1 MU2

4.8.1.1 HARTING PLUGS

Mains cable		Motor cable	
Description	**Order number**	**Description**	**Order number**
Han Q5 / 0 Female insert 1 pc	09 12 005 3101	Han Q8 / 0 Male terminal 1 pc	09 12 008 3001
Crimp Contact 2.5 mm^2 / 14 AWG 4 pcs	09 33 000 6202	Crimp Contact 2.5 mm^2 / 14 AWG 4 pcs Motor	09 33 000 6102
		Crimp Contact 1.5 mm^2 / 16 AWG 4 pcs Therm. + Brk.	09 33 000 6104
Hood Top M20 1 pc	19 20 003 0427	Hood Q8 / M25 1 pc	19 20 008 0429
Cable Clamp M20, IP68 1 pc	19 00 000 5184	Cable Seal plastic M25 1 pc	19 12 000 5158

Table 67. Harting plugs.

4.8.1.2 TYCO PLUGS

Mains cable		Motor cable	
Description	**Order number**	**Description**	**Order number**
HE-Q.5 Female insert 1 pc	1102194-1	HG-Q.8 Male terminal 1 pc	1103070-1
Socket Contact 2.5 mm^2 / 14 AWG 4 pcs	4-1105101-1	Pin Contact 2.5 mm^2 / 14 AWG 4 pcs Motor	4-1105100-1
		Pin Contact 1.5 mm^2 / 16 AWG 4 pcs Therm. + Brk.	3-1105100-1
Hood HG-Q.5 1 pc	0-1103169-1	Hood HG-Q.M25 1 pc	1103073-2
Gland fitting 1 pc	2-1102771-5	Gland fitting 1 pc	1103074-6

Table 68. Tyco plugs.

4.8.2 MU3

4.8.2.1 HARTING PLUGS

Mains cable		Motor cable	
Description	**Order number**	**Description**	**Order number**
Han Q4 / 2 Female insert 1 pc	09 12 006 3141	Han Q8 / 0 Male terminal 1 pc	09 12 008 3001
Crimp Contact 6 mm^2 / 10 AWG 4 pcs	09 32 000 6208	Crimp Contact 4 mm^2 / 12 AWG 4 pcs Motor	09 33 000 6107
		Crimp Contact 1.5 mm^2 / 16 AWG 4 pcs Therm. + Brk.	09 33 000 6104
Hood Q8 PG21 1 pc	09 12 008 0429	Hood Q8 PG21 1 pc	09 12 008 0429
Cable Seal plastic PG21 1 pc	19 12 000 5158	Cable Seal plastic PG21 1 pc	19 12 000 5158

Table 69. Harting plugs.

4.8.2.2 TYCO PLUGS

Mains cable		Motor cable	
Description	**Order number**	**Description**	**Order number**
HG-Q.4 /2 Female insert 1 pc	1103096-1	HG-Q.8 Male terminal 1 pc	1103070-1
Socket Contact 6 mm^2 / 10 AWG 4 pcs	4-1108756-1	Pin Contact 4 mm^2 / 12 AWG 4 pcs Motor	5-1105100-1
		Pin Contact 1.5 mm^2 / 16 AWG 4 pcs Therm. + Brk.	3-1105100-1
Hood HG-Q.M25 1 pc	1103073-2	Hood HG-Q.M25 1 pc	1103073-2
Gland fitting 1 pc	1103074-6	Gland fitting 1 pc	1103074-6

Table 70. Tyco plugs.

4.8.3 Recommended metallic plugs for motor cables

To improve EMC level (see Table 10) the use of a metallic connectors for the motor cable is suggested.

4.8.3.1 Harting plugs (alternative 1)

Motor cable MU2		Motor cable MU3	
Description	**Order number**	**Description**	**Order number**
Han Q8 / 0 Male terminal 1 pc	09 12 008 3001	Han Q8 / 0 Male terminal 1 pc	09 12 008 3001
Crimp Contact 2.5 mm^2 / 14 AWG 4 pcs Motor	09 33 000 6102	Crimp Contact 4 mm^2 / 12 AWG 4 pcs Motor	09 33 000 6107
Crimp Contact 1.5 mm^2 / 16 AWG 4 pcs Therm. + Brk.	09 33 000 6104	Crimp Contact 1.5 mm^2 / 16 AWG 4 pcs Therm. + Brk.	09 33 000 6104
Hood Q8 1 pc	19 20 008 0429	Hood Q8 1 pc	19 12 008 0412
Cable Seal 1 pc	19 62 000 5056	Cable Seal 1 pc	19 62 000 5056

Table 71. Harting plugs (alternative 1).

4.8.3.2 Harting plugs (alternative 2)

Motor cable MU2		Motor cable MU3	
Description	**Order number**	**Description**	**Order number**
Han Q8 / 0 Male terminal 1 pc	09 12 008 3001	Han Q8 / 0 Male terminal 1 pc	09 12 008 3001
Crimp Contact 2.5 mm^2 / 14 AWG 4 pcs Motor	09 33 000 6102	Crimp Contact 4 mm^2 / 12 AWG 4 pcs Motor	09 33 000 6107
Crimp Contact 1.5 mm^2 / 16 AWG 4 pcs Therm. + Brk.	09 33 000 6104	Crimp Contact 1.5 mm^2 / 16 AWG 4 pcs Therm. + Brk.	09 33 000 6104
Hood Q8 1 pc	19 12 008 0428	Hood Q8 1 pc	19 12 008 0428
Cable Seal 1 pc	19 62 000 5092	Cable Seal 1 pc	19 62 000 5092

Table 72. Harting plugs (alternative 2).

5. COMMISSIONING

Before commissioning, note the following directions and warnings:

⚠	Internal components and circuit boards of VACON® 20 X drive (except for the galvanically isolated I/O terminals) are live when it is connected to the mains potential. **Coming into contact with this voltage is extremely dangerous and may cause death or severe injury.**
⚠	The motor terminals **U**, **V**, **W** and the brake resistor terminals **are live** when VACON® 20 X drive is connected to the mains, **even if the motor is not running**.
⚠	The control I/O-terminals are isolated from the mains potential. However, they **may have a dangerous control voltage** present even when VACON® 20 X drive is disconnected from the mains.
⚠	Do not make any connections to or from the frequency converter when it is connected to the mains.
⚠	**After disconnecting** the AC drive from the mains, **wait** until the indicators on the powerhead go out. Wait an additional 30 seconds before doing any work on the connections of VACON® 20 X Drive. Do not open the unit before this time has expired. After expiration of this time, use a measuring equipment to absolutely ensure that no voltage is present. **Always ensure absence of voltage before starting any electrical work!**

5.1 COMMISSIONING OF THE DRIVE

Read carefully the safety instructions in Chapter 1 and above and follow them.

After the installation:

☐	Check that both the frequency converter and the motor are grounded.
☐	Check that the mains and motor cables comply with the requirements given in chapter 4.1.1.
☐	Check that the control cables are located as far as possible from the power cables, see chapter 4.4.
☐	Check that the shields of the shielded cables are connected to protective earth marked with ⏚ .
☐	Check the tightening torques of all terminals
☐	Check the quality and quantity of cooling air
☐	Check that all Start/Stop switches connected to the system are in the Stop-position.
☐	Before connecting the frequency converter to mains: Check mounting and condition of all fuses and other protective devices.

5.2 RUNNING THE MOTOR

MOTOR RUN CHECK LIST

⚠	**Before starting the motor**, check that the motor is **mounted properly** and ensure that the machine connected to the motor allows the motor to be started.
⚠	Set the maximum motor speed (frequency) according to the motor and the machine connected to it.
⚠	**Before reversing the motor** make sure that this can be done safely.
⚠	Make sure that no power correction capacitors are connected to the motor cable.
⚠	Make sure that the motor terminals are not connected to mains potential.

5.2.1 CABLE AND MOTOR INSULATION CHECKS

1. Motor cable insulation checks
   Disconnect the motor cable from terminals U, V and W of the AC drive and from the motor.

Measure the insulation resistance of the motor cable between each phase conductor as well as between each phase conductor and the protective ground conductor. The insulation resistance must be >1MΩ at ambient temperature of 20°C.

2. Mains cable insulation checks
   Disconnect the mains cable from terminals L1, L2 and L3 of the AC drive and from the mains. Measure the insulation resistance of the mains cable between each phase conductor as well as between each phase conductor and the protective ground conductor. The insulation resistance must be >1MΩ at ambient temperature of 20°C.
3. Motor insulation checks
   Disconnect the motor cable from the motor and open the bridging connections in the motor connection box. Measure the insulation resistance of each motor winding. The measurement voltage must equal at least the motor nominal voltage but not exceed 1000 V. The insulation resistance must be >1MΩ at ambient temperature of 20°C.

5.3 MAINTENANCE

In normal conditions, the AC drive is maintenance-free. However, regular maintenance is recommended to ensure trouble-free operation and longevity of the drive. We recommend the table below is followed for maintenance intervals.

Maintenance interval	Maintenance action
Regularly and according to general maintenance interval	• Check tightening torques of terminals
6...24 months (depending on environment)	• Check input and output terminals and control I/O terminals. • Check for corrosion on terminals and other surfaces • Check the heatsink for dust and clean if necessary
6...10 years	• Change main fan
12...24 months	• Charge capacitors, only after long storage times or long down times without supply: contact your nearest Vacon service center.

Table 73.

6. TECHNICAL DATA

6.1 AC DRIVE POWER RATINGS

6.1.1 MAINS VOLTAGE 3AC 380-480V

	Mains Voltage 3AC 380-480V, 50/60 Hz						
	Converter type	Input current [A]	Loadability			Motor shaft power	
						400V	480V
			Rated continuous current I_N [A]	50% overload current [A]	Max current I_S	[kW]	[HP]
MU2	0003	**3.2**	**2.4**	3.6	4.8	**0.75**	**1.0**
MU2	0004	**4.0**	**3.3**	5.0	6.6	**1.1**	**1.5**
MU2	0005	**5.6**	**4.3**	6.5	8.6	**1.5**	**2.0**
MU2	0006	**7.3**	**5.6**	8.4	11.2	**2.2**	**3.0**
MU2	0008	**9.6**	**7.6**	11.4	15.2	**3.0**	**4.0**
MU3	0009	**11.5**	**9.0**	13.5	18.0	**4.0**	**5.0**
MU3	0012	**14.9**	**12.0**	18.0	24.0	**5.5**	**7.5**
MU3	0016	**20**	**16.0**	24.0	32.0	**7.5**	**10.0**

Table 74. Power ratings of VACON® *20 X, supply voltage 380-480V.*

NOTE: The rated currents in given ambient temperatures (in Table 74) are achieved only when the switching frequency is equal to or less than the factory default.

6.1.2 DEFINITIONS OF OVERLOADABILITY

Overloadability =Following continuous operation at rated output current I_N, the converter supplies 150% * I_N for 1 min, followed by a period of at least 9 min at I_N or below.

Example: If the duty cycle requires 150% rated current for 1 min in every 10 min, the remaining 9 min must be at rated current I_N or less.

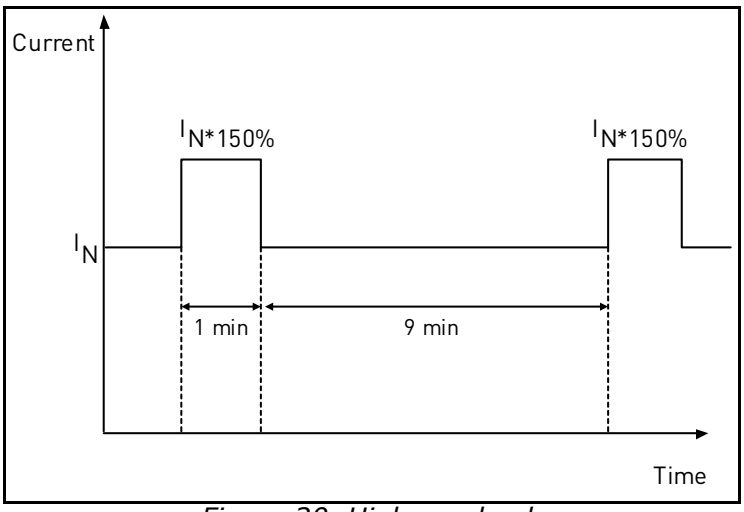

Figure 20. High overload.

6.2 VACON® 20 X - TECHNICAL DATA

Mains connection	Input voltage U_{in}	3AC 380...480V
	Input voltage tolerance	-15%...+10% continuously
	Input frequency	50/60 Hz
	Input frequency tolerance	45...66 Hz
	Protection class	I
	Connection to mains	Once per minute or less
	Starting delay	4 s
	Supply network	TN-networks (cannot be used with corner earthed networks)
	Short-circuit current	Maximum short-circuit current has to be <50kA
Motor connection	Output voltage	3AC 0...U_{in}
	Rated output current	I_N: Ambient temperature max. +40°C. See Table 74.
	Overload output current	1.5 x I_N (1 min/10 min)
	Starting current	I_S for 2 s every 20 s (I_S = 2.0 * I_N)
	Output frequency	0...320 Hz
	Frequency resolution	0.01 Hz
	Protection class	I
	Motor characteristics	AC squirrel cage motors Permanent magnet motors
	Cable type	Screened motor cable
	Cable maximum length	30 m
Control characteristics	Switching frequency	Programmable 2...16 kHz; Default 6 kHz. Automatic switching frequency derating in case of overheating
	Frequency reference: Analogue input Panel reference	 Resolution ±0.05% (11-bit), accuracy ±1% Resolution 0.01 Hz
	Field weakening point	8...320 Hz
	Acceleration time	0.1...3000 sec
	Deceleration time	0.1...3000 sec
Control connections	See Chapter 5.	
Communication interface	Fieldbus	Optional: AS-interface; Profibus DP, CanOpen, Devicenet, Profinet IO, Ethernet IP
	Status indicators	Drive status indicators (LED) on top side (POWER, RUN, FAULT, READY)

Ambient conditions	Ambient operating temperature	-10°C...+40°C
	Extended temperature range	up to 50°C with current derating (see chapter 1.9)
	Storage temperature	-40°C...+70°C
	Relative humidity	0 to 100% R_H. Good resistance to most acids, alkalis and oils. Contact factory for more details.
	Pollution degree	PD2 used for PCB design. However the drive is suitable for outdoor use because of dust-tight enclosure to numeral 6 [acc. to IEC 60529]
	Altitude	100% load capacity (no derating) up to 1,000m; derating 1% / 100m at 1.000...3.000m
	Degree of protection	IP65
	Stationary vibration: Sinusoidal	3 Hz ≤ f ≤ 8.43 Hz: 7.5mm 8.43 Hz ≤ f ≤ 200 Hz: 2g (3M6 acc. to IEC 60721-3-3)
	Shock/Bump:	25g/6ms (3M6 acc. to IEC 60721-3-3)
Directives	EMC	2004/108/EC
	Low Voltage	2006/95/EC
	RoHS	2002/95/EC
	WEEE	2012/19/EC
Standards	Immunity	EN61800-3 (2004), 1st and 2nd environment
	Emissions	EN61800-3 (2004), Category C3 as standard.
	Safety	EN 61800-5-1
Production quality	ISO 9001	
Approvals	Functional Safety	TÜV - Tested (SIL1)
	Electrical Safety	TÜV - Tested
	EMC	pending
	USA, Canada	cULus approval, file number E171278
Declaration of Conformity	Korea	pending
	Australia	pending
	Europe	EC Declaration of Conformity

Protections	Undervoltage trip limit	Depends on supply voltage (0,8775*supply voltage): Supply voltage 400 V: Trip limit **351 V** Supply voltage 480 V: Trip limit **421 V**
	Earth fault protection	Yes
	Mains supervision	Yes
	Motor phase supervision	Yes
	Overcurrent protection	Yes
	Unit overtemperature protection	Yes
	Motor overload protection	Yes. These devices provide motor overload protection at 105% of full load amperes.
	Motor stall protection	Yes
	Motor underload protection	Yes
	Short-circuit protection of +24V voltage	Yes
	Thermal motor protection	Yes (by PTC)

Table 75. Vacon 20 X technical data.

6.2.1 TECHNICAL INFORMATION ON CONTROL CONNECTIONS

Standard I/O		
Terminal	**Signal**	**Technical information**
Connector X1		
1	+24V	+24V, ±10%, max volt. ripple < 100mVrms; max. 40 mA Short-circuit protected
2	Digital input 1	Positive logic Ri = min. 4kΩ 15...30V = "1" 0...5V = "0"
3	GND	Connected to GND
4	Digital input 2	Positive logic Ri = min. 4kΩ 15...30V = "1" 0...5V = "0"
5	PE	Functional earth
Connector X2		
1	+24V	+24V, ±10%, max volt. ripple < 100mVrms; max. 40 mA Short-circuit protected
2	Digital input 3	Positive logic Ri = min. 4kΩ 15...30V = "1" 0...5V = "0"
3	GND	Connected to GND
4	Digital input 4	Positive logic Ri = min. 4kΩ 15...30V = "1" 0...5V = "0"
5	PE	Functional earth
Connector X5		
1	Power supply +24V	+24V, ±10%. Short-circuit protected Can be used with an external power supply (with a current limiter or fuse protected) to supply the control unit and fieldbus for backup purposes. Dimensioning: max. 1000mA/control unit.
2	S1 - STO input +	Insulated digital input according to IEC 61131-2 15V....30V = "1" 0V....5V = "0" typical input current 10...15 mA Interchangeble polarity
4	G1 - STO input -	
3	GND	Connected to GND

Table 76. Technical information on standard I/O terminals.

7. Options

7.1 Vacon keypad with seven-segment display

The text keypad is an option available for VACON® 20 X. The control keypad is the interface between the VACON® 20 X frequency converter and the user.

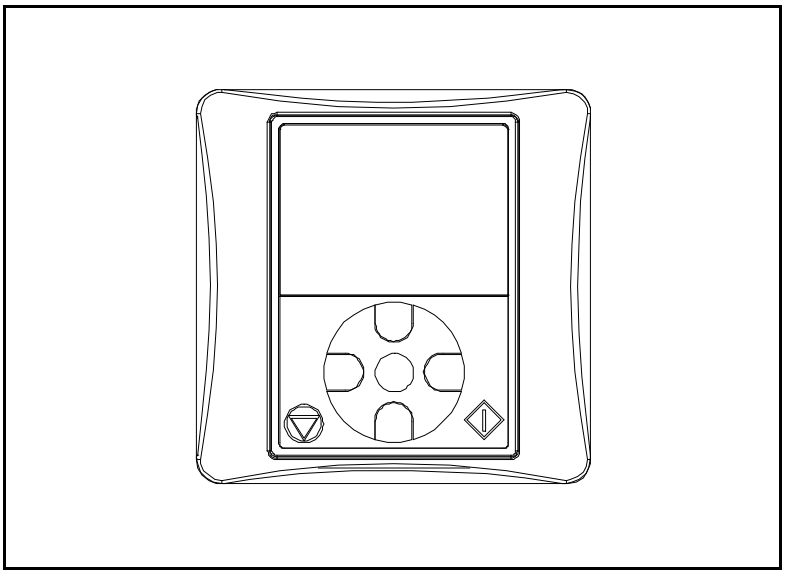

Figure 21. Text keypad.

7.1.1 Mounting onto the drive

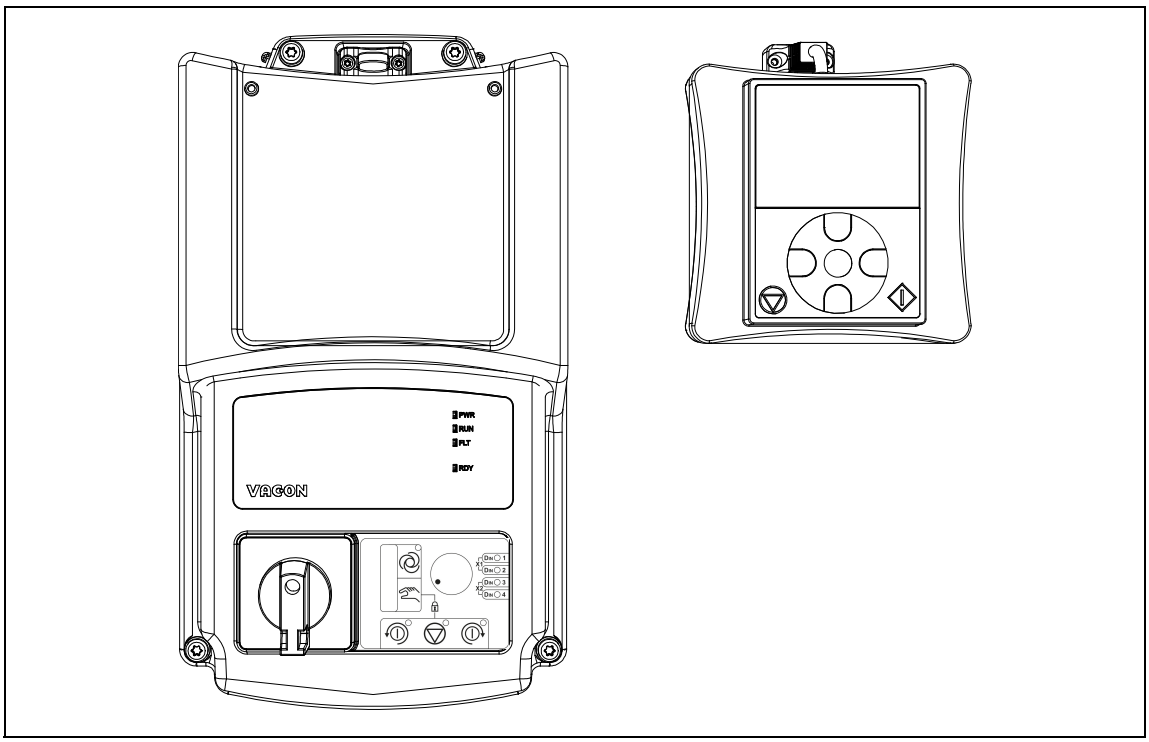

Figure 22. Drive and the optional keypad kit.The optional keypad kit includes: keypad and cable.

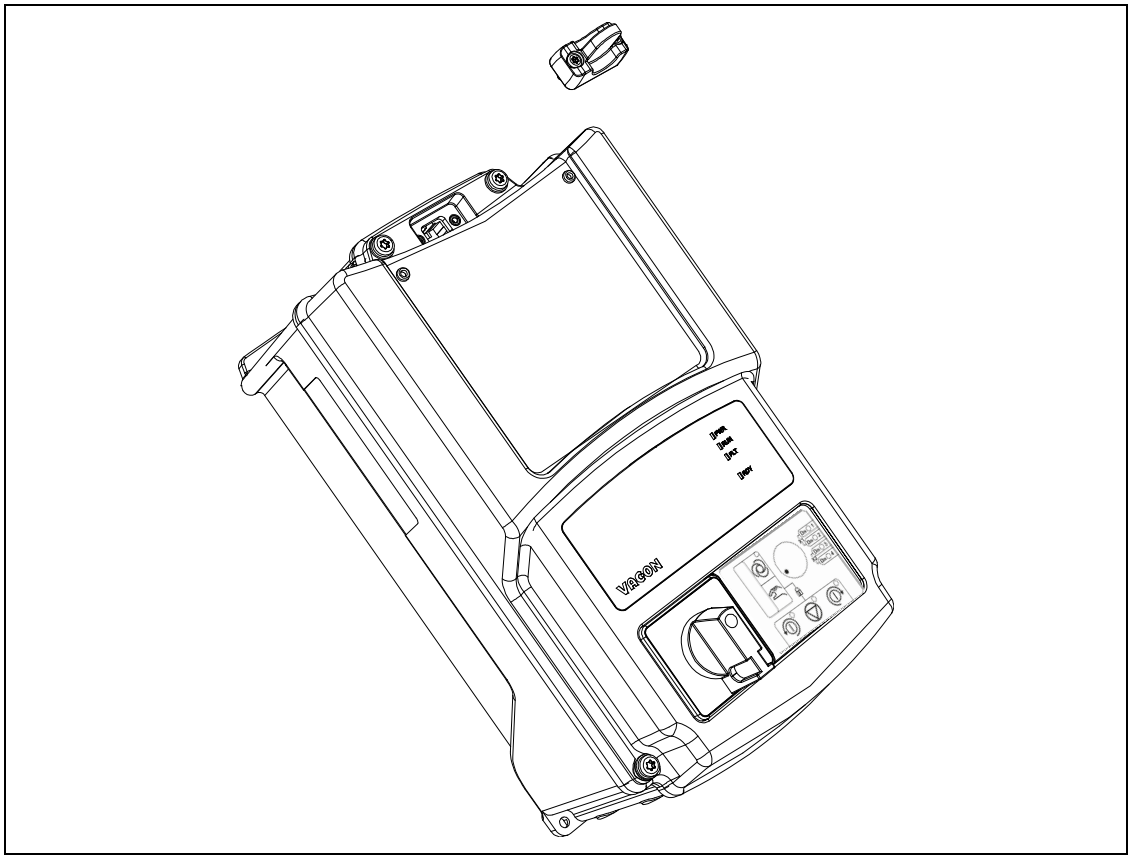

Figure 23. Disconnection of the HMI cap from the drive.

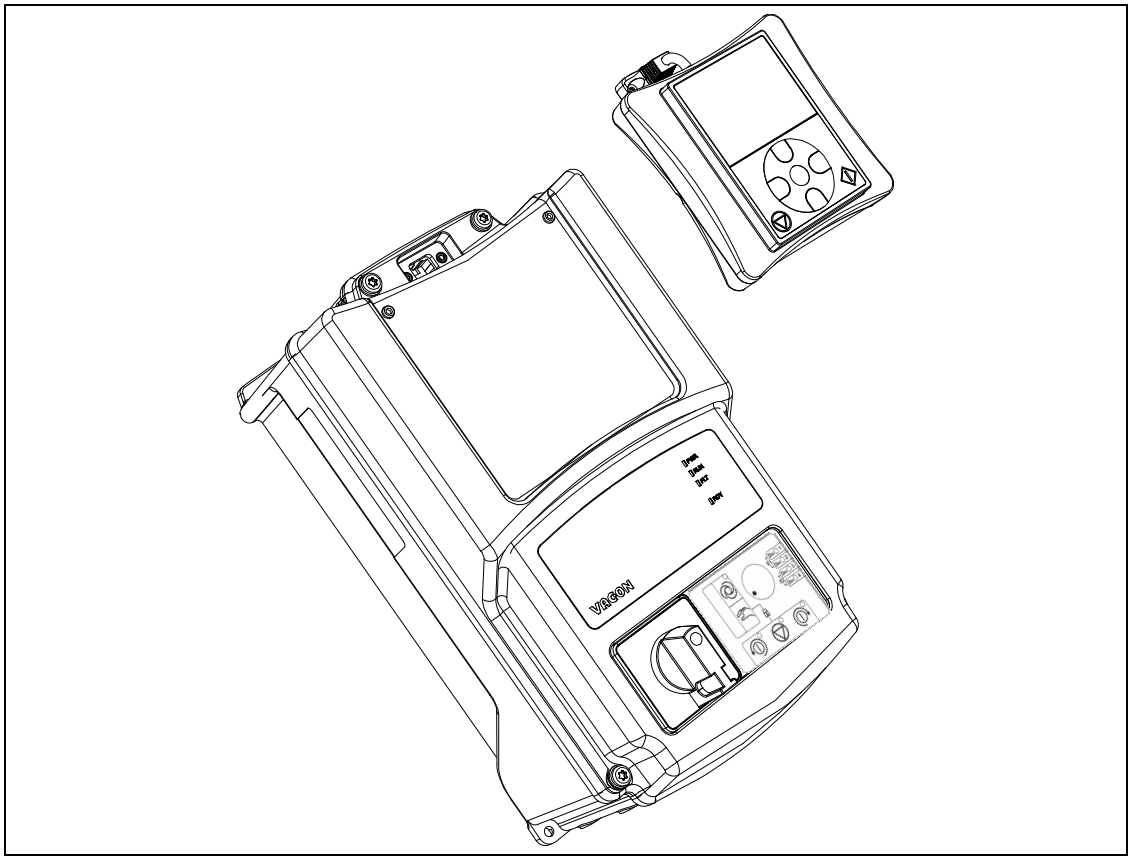

Figure 24. Mounting of the keypad.

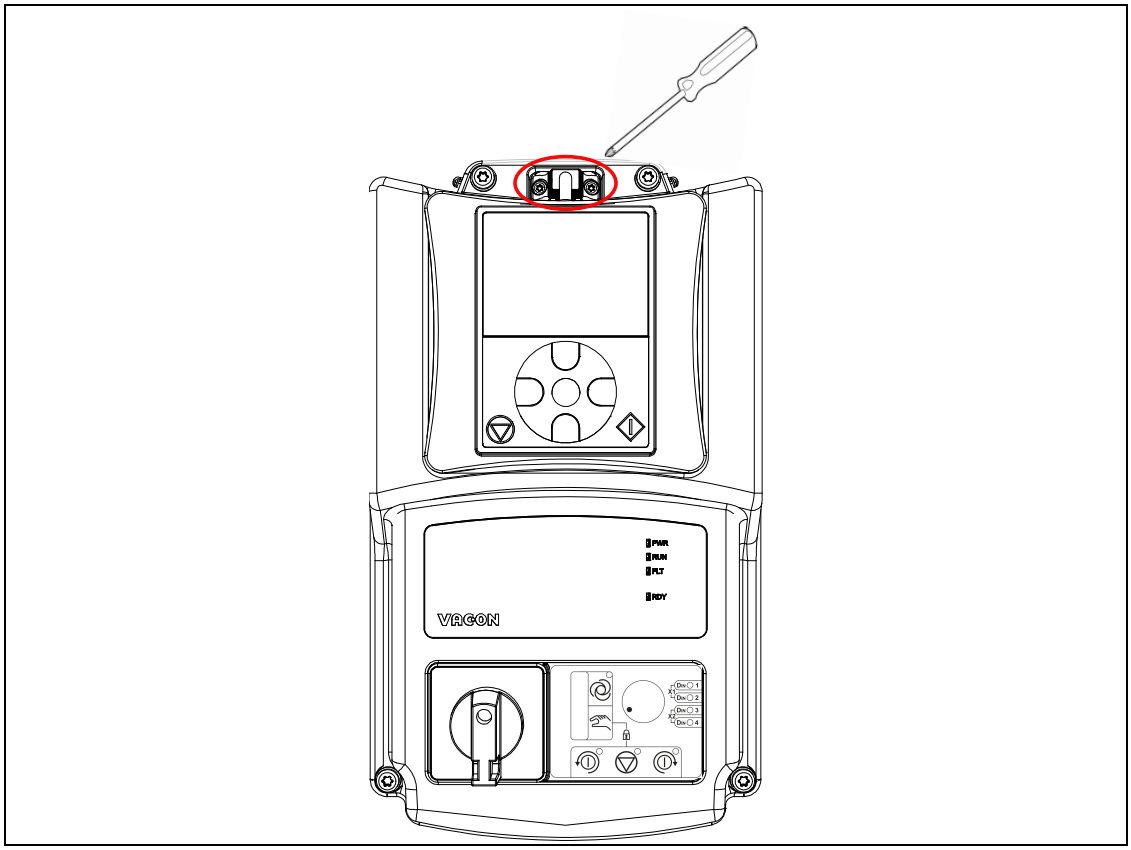

Figure 25. Tighten (max tighten torque 0.5 Nm) the two screws of the keypad cable to the enclosure of the drive. Keypad mounted onto the drive.

7.1.2 TEXT KEYPAD - BUTTONS

With the keypad it's possible to control the speed of the motor, to supervise the state of the drive and to set the frequency converter's parameters.

The button section of the text keypad is shown in the following picture.

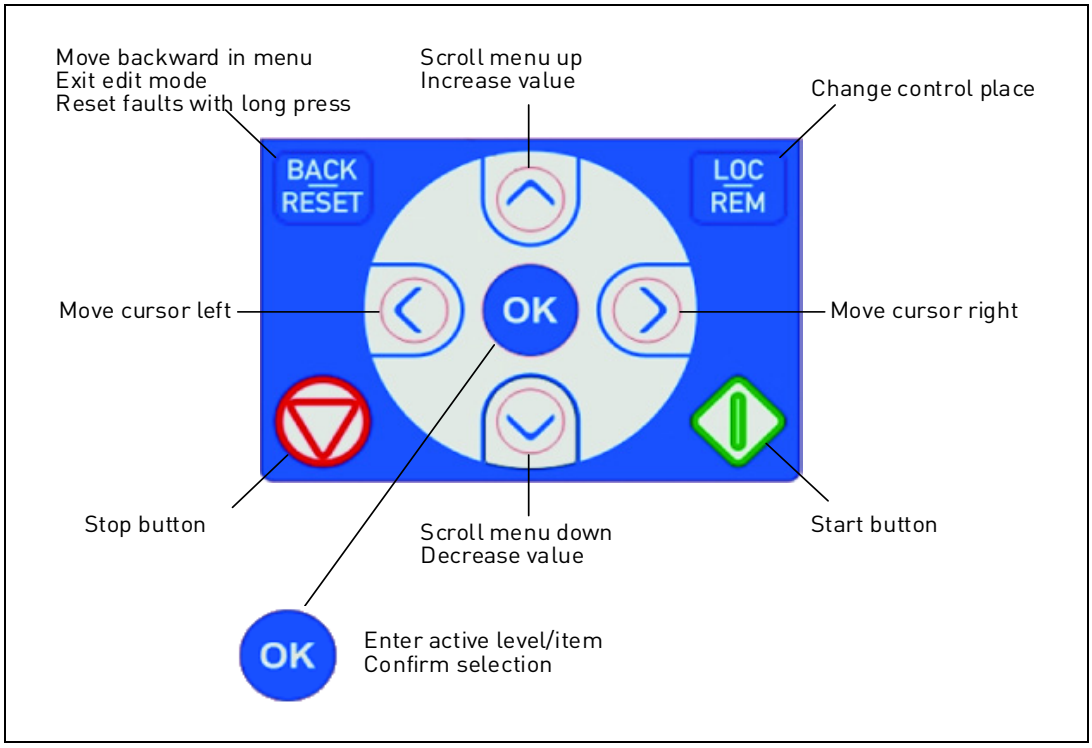

Figure 26.Keypad buttons.

7.2 TEXT KEYPAD

The keypad display indicates the status of the motor and the drive and any irregularities in motor or drive functions. On the display, the user can see the information about his present location in the menu structure and the item displayed.

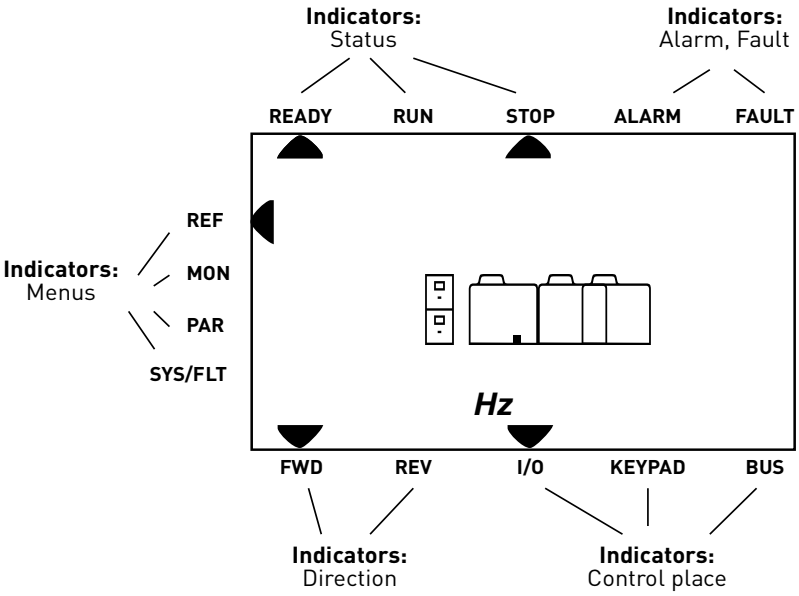

Figure 27. Keypad display.

7.3 MENU STRUCTURE

The data on the control keypad are arranged in menus. Use the Up and Down arrows to move between the menus. Enter the group/item by pressing the OK button and return to the former level by pressing the Back/Reset button. The arrows on the left of the display show the active menu. In Figure 27 the REF menu is active. The table below shows the structure of the main menu:

Reference (REF)	Reference from Keypad
Monitor (MON)	Monitoring values
Parameters (PAR)	Application parameters
System/Fault (SYS/FLT)	System Menu
	Active fault
	History fault

Table 77. Keypad menus.

7.4 USING THE KEYPAD

This chapter provides you with information on navigating the menus on Vacon 20 X and editing the values of the parameters.

7.4.1 MAIN MENU

The menu structure of Vacon 20 X control software consists of a main menu and several submenus. Navigation in the main menu is shown below:

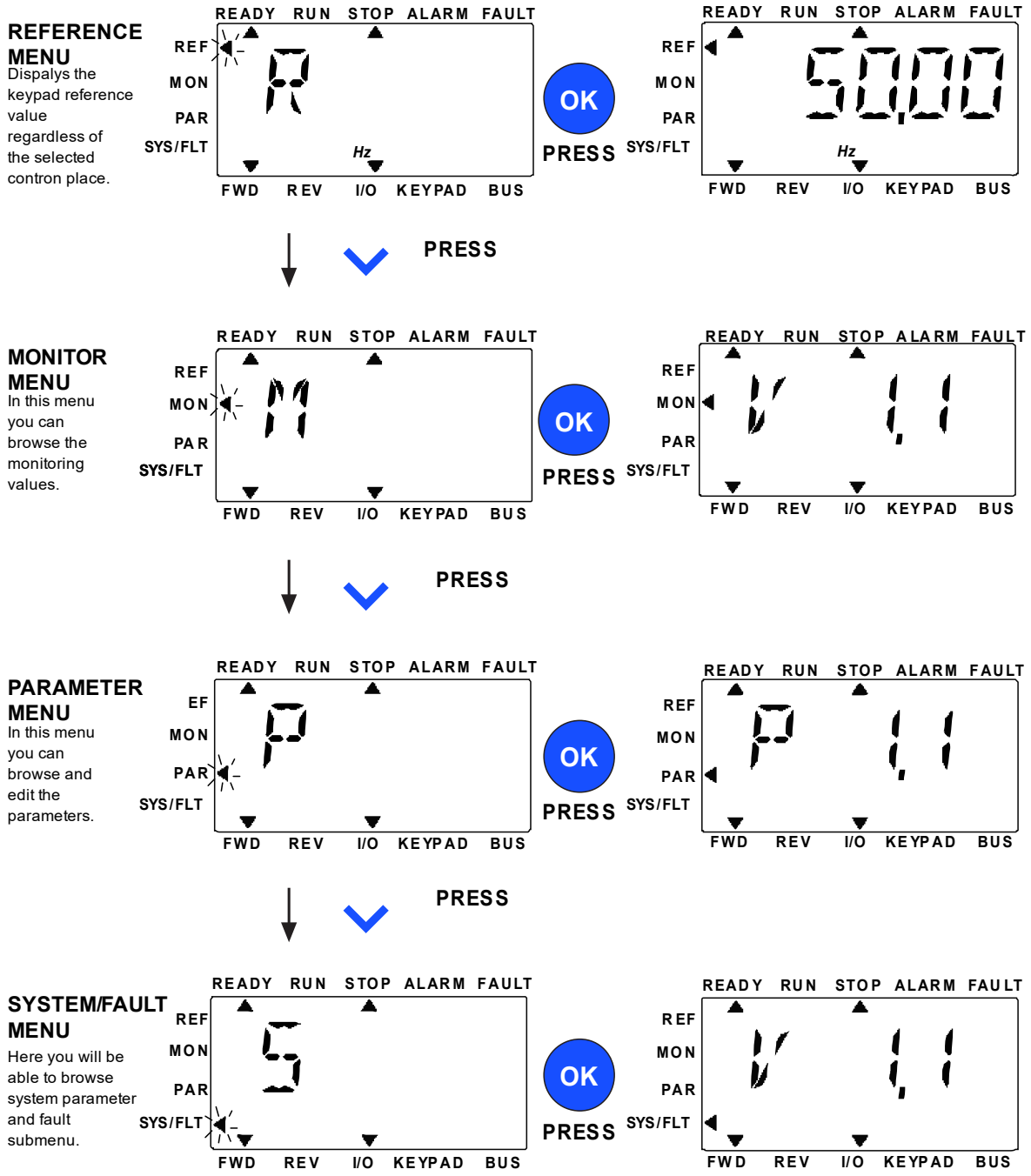

Figure 28. The Main menu of Vacon 20 X.

7.4.2 RESETTING FAULT

When a fault appears and the drive stops examine the cause of the fault, perform the action advised in the Fault Tracing paragraph and reset the fault by pressing the RESET button.

7.4.3 LOCAL/REMOTE CONTROL BUTTON

The LOC/REM button is used for two functions: to quickly access the Control page and to easily change between the Local (Keypad) and Remote control places.

Control places

The *control place* is the source of control where the drive can be started and stopped. Every control place has its own parameter for selecting the frequency reference source. In the VACON® 20 X drive, the *Local control place* is always the keypad. The *Remote control place* is determined by parameter (I/O or Fieldbus). The selected control place can be seen on the status bar of the keypad.

Remote control place

I/O and Fieldbus can be used as remote control places.

Local control

Keypad is always used as control place while in local control. Local control has higher priority than remote control. Switching between Local and Remote Control can be done by pressing the LOC/REM-button on the keypad.

7.4.4 REFERENCE MENU

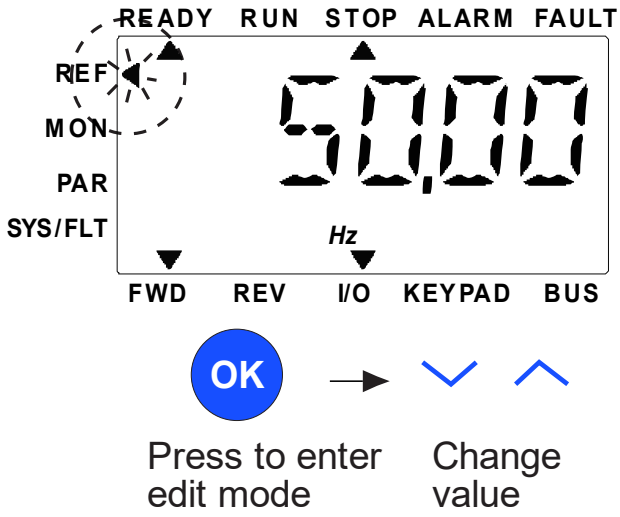

Figure 29. Reference menu.

The reference value can be changed with UP / DOWN button as shown in Figure 29.

If the value has big change, first press Left and Right buttons to select the digit which has to be changed, then press Up button to increase and Down button to decreases the value in the selected digit. The changing reference frequency will been taken into use immediately without pressing OK.

Note! LEFT and RIGHT buttons can be used to change the direction in Ref menu in local control mode.

7.4.5 MONITORING MENU

Monitoring values are actual values of measured signals as well as status of some control settings. It is visible in Vacon 20 X display, but it can not be edited. The monitoring values are listed in the Application Manual.

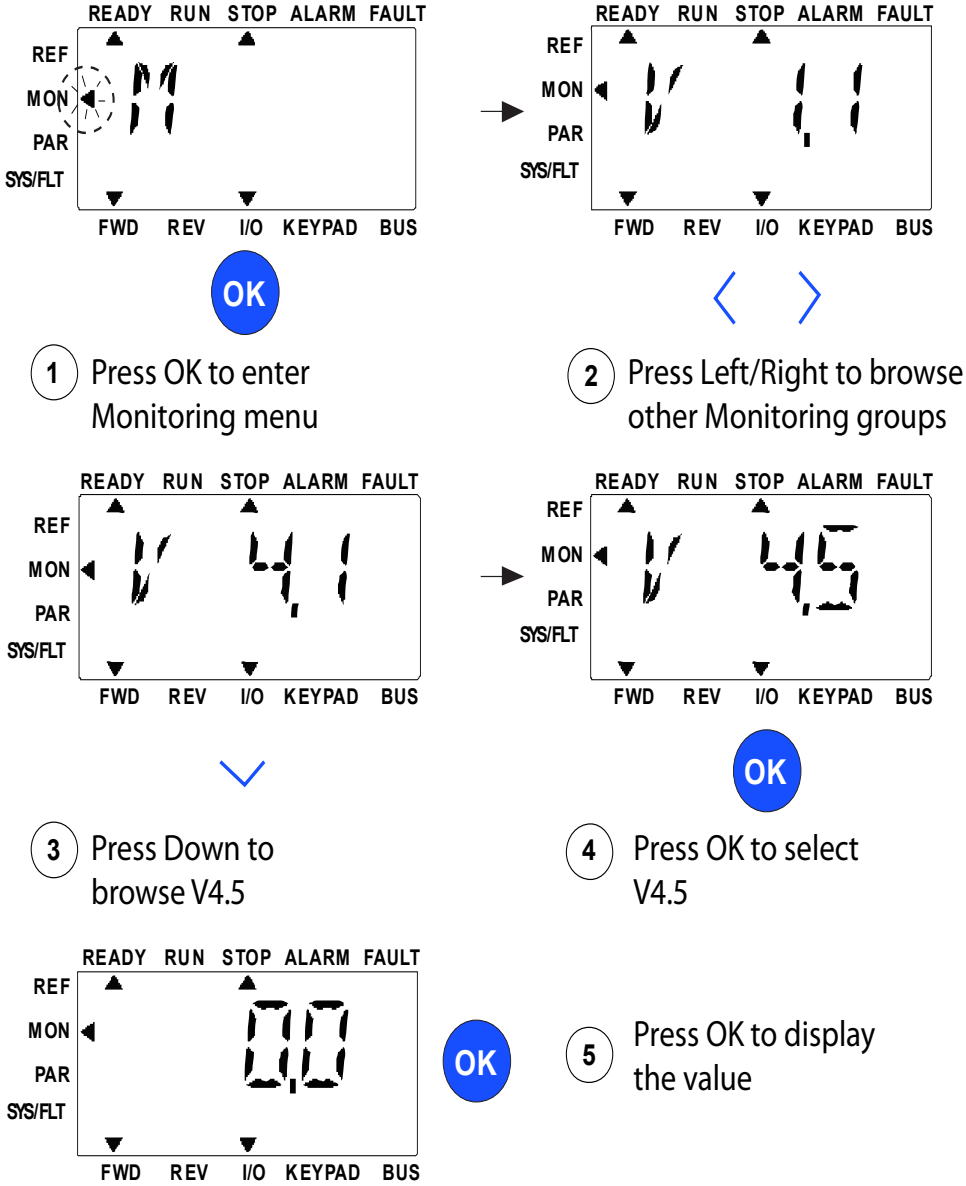

Figure 30. Monitoring menu.

Pressing Left/Right button to change the actual parameter to the first parameter of the next group, to browse monitor menu from V1.x to V2.1 to V3.1 to V4.1. After entering the desired group, the monitoring values can be browsed by pressing UP/DOWN button, as shown in Figure 30. In MON menu the selected signal and its value are alternating in the display by pressing OK button.

Note! Turn on drive power, arrowhead of main menu is at MON, V x.x or monitor parameter value of Vx.x is displayed in Panel. Display Vx.x or monitor parameter value of Vx.x is determined by the last show status before power shut down.

7.4.6 PARAMETER MENU

In Parameter menu only the Quick setup parameter list is shown as default. To view the other advanced parameter groups, see the Application Manual. The following figure shows the parameter menu view:

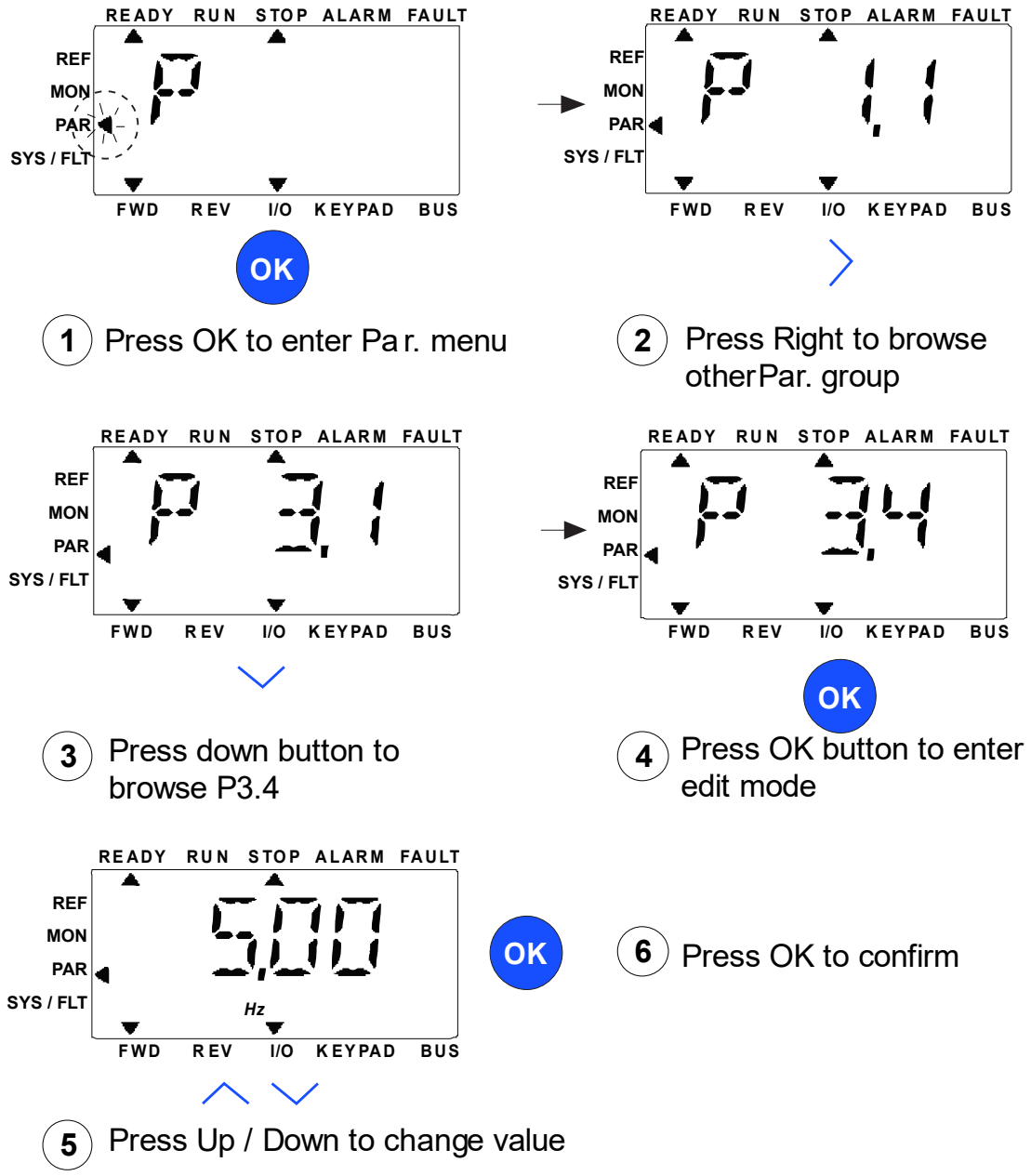

Figure 31.Parameter menu

Change value of a parameter following the procedure below:

1. Locate the parameter.
2. Enter the Edit mode by pressing OK.
3. Set new value with the arrow buttons up/down. You can also move from digit to digit with the arrow buttons left/right if the value is numerical and change then the value with the arrow buttons up/down.
4. Confirm change with OK button or ignore change by returning to previous level with Back/Reset button.

7.4.7 SYSTEM/FAULT MENU

SYS/FLT menu including fault submenu, field bus submenu and system parameter submenu. In system parameter submenu, there are some editable parameter (P) and some not editable parameters (V). The Fault submenu of SYS/FLT menu includes active fault submenu and fault history submenu.

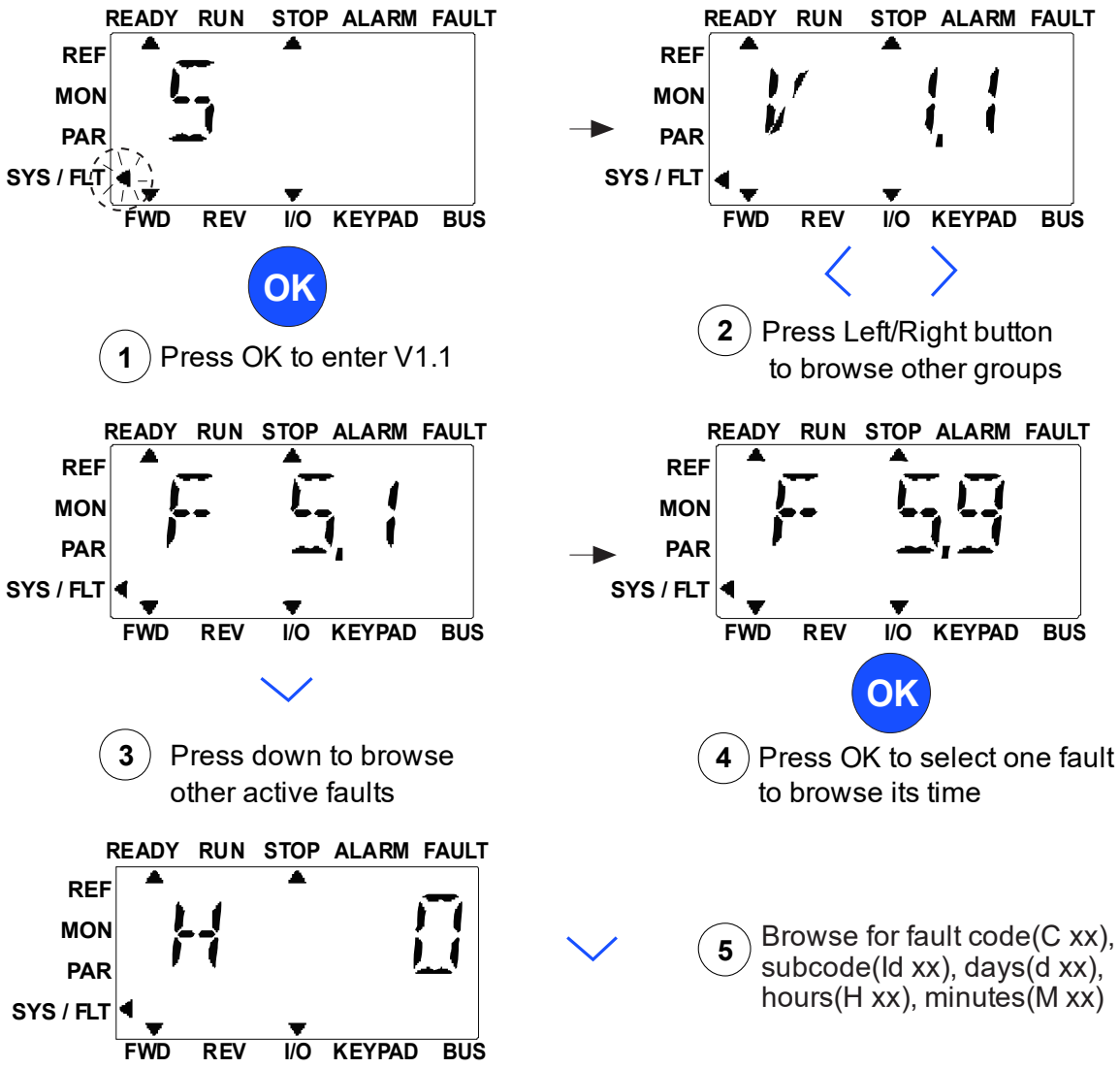

Figure 32. System and Fault menu.

7.4.7.1 Faults

Under this menu, you can find *Active faults*, *Reset faults*, *Fault history*, *Counters* and *Software info.*

In active fault situation, FAULT arrow is blinking and the display is blinking active fault menu item with fault code. If there are several active faults, you can check it by entering the active fault submenu F5.x. F5.1 is always the latest active fault code. The active faults can be reset by pressing BACK / RESET button with long time (>2 s), when the API is in active fault submenu level (F5.x). If the fault cannot be reset, the blinking continues. It is possible to select other display menus during active fault, but in this case the display returns automatically to the fault menu if no button is pressed in 10 seconds. The fault code, subcode and the operating day, hour and minute values at the fault instant are shown in the value menu (operating hours = displayed reading).

Active faults

Menu	Function	Note
Active faults	When a fault/faults appear(s), the display with the name of the fault starts to blink. Press OK to return to the Diagnostics menu. The *Active faults* submenu shows the number of faults. Select the fault and push OK to see the fault-time data.	The fault remains active until it is cleared with the RESET button or with a reset signal from the I/O terminal or fieldbus or by choosing *Reset faults* (see below). The memory of active faults can store the maximum of 10 faults in the order of appearance.

Fault history

Menu	Function	Note
Fault history	10 latest faults are stored in the Fault history.	Entering the Fault history and clicking OK on the selected fault shows the fault time data (details).

7.4.8 FAULT TRACING

Fault code	Fault name	Subcode	Possible cause	Remedy
1	Overcurrent		AC drive has detected too high a current (>4*I_H) in the motor cable: • sudden heavy load increase • short circuit in motor cables • unsuitable motor	Check loading. Check motor. Check cables and connections. Make identification run. Check ramp times.
2	Overvoltage		The DC-link voltage has exceeded the limits defined. • too short a deceleration time • brake chopper is disabled • high overvoltage spikes in supply • Start/Stop sequence too fast	Make deceleration time longer. Use brake chopper or brake resistor (available as options). Activate overvoltage controller. Check input voltage.
3	Earth fault		Current measurement has detected that the sum of motor phase current is not zero. • insulation failure in cables or motor	Check motor cables and motor.
8	System Fault	84	MPI communication crc error	Reset the fault and restart. Should the fault re-occur, contact the distributor near to you.
		89	HMI receives buffer overflow	Check PC-drive cable. Try to reduce ambient noise
		90	Modbus receives buffer overflow	Check Modbus specifications for time-out. Check cable length. Reduce ambient noise. Check baudrate.
		93	Power identification error	Try to reduce ambient noise. Reset the fault and restart. Should the fault re-occur, contact the distributor near to you.
		97	MPI off line error	Reset the fault and restart. Should the fault re-occur, contact the distributor near to you.
		98	MPI driver error	Reset the fault and restart. Should the fault re-occur, contact the distributor near to you.
		99	Option board driver error	Check contact in option board slot Try to reduce ambient noise; Reset the fault and restart. Should the fault re-occur, contact the distributor near to you.
		100	Option board configuration error	Check contact in option board slot Try to reduce ambient noise; Should the fault re-occur, contact the distributor near to you.

Table 78. Fault codes and descriptions.

Fault code	Fault name	Subcode	Possible cause	Remedy
8	System Fault	101	Modbus buffer overflow	Check Modbus specifications for time-out. Check cable length. Reduce ambient noise. Check baudrate.
		104	Option board channel full	Check contacts in option board slot. Try to reduce ambient noise. Should the fault re-occur, contact the distributor near to you.
		105	Option board memory allocation fail	Check contacts in option board slot. Try to reduce ambient noise. Should the fault re-occur, contact the distributor near to you.
		106	Option board Object queue full	Check contacts in option board slot. Try to reduce ambient noise. Should the fault re-occur, contact the distributor near to you.
		107	Option board HMI queue full	Check contacts in option board slot. Try to reduce ambient noise. Should the fault re-occur, contact the distributor near to you.
		108	Option board SPI queue full	Check contacts in option board slot. Try to reduce ambient noise. Should the fault re-occur, contact the distributor near to you.
		111	Parameter copy error	Check if parameter set is compatible with drive. Do not remove Keypad until copy is finished.
		113	Frequency detective timer overflow	Check keypad contacts. Try to reduce ambient noise. Should the fault re-occur, contact the distributor near to you.
		114	PC control time out fault	Do not close Vacon Live when PC control is active. Check PC-Drive cable. Try to reduce ambient noise.
		115	DeviceProperty data format	Reset the fault and restart. Should the fault re-occur, contact the distributor near to you.
		120	Task stack overflow	Reset the fault and restart. Should the fault re-occur, contact the distributor near to you.

Table 78. Fault codes and descriptions.

Fault code	Fault name	Subcode	Possible cause	Remedy
9	Undervoltage		DC-link voltage is under the voltage limits defined. • most probable cause: too low a supply voltage • AC drive internal fault • defect input fuse • external charge switch not closed **NOTE!** This fault is activated only if the drive is in Run state.	In case of temporary supply voltage break reset the fault and restart the AC drive. Check the supply voltage. If it is adequate, an internal failure has occurred. Contact the distributor near to you.
10	Input phase		Input line phase is missing.	Check supply voltage, fuses and cable.
11	Output phase		Current measurement has detected that there is no current in one motor phase.	Check motor cables and motor.
13	AC drive undertemperature		Too low temperature measured in power unit's heatsink or board. Heatsink temperature is under -10°C.	Check the ambient temperature.
14	AC drive overtemperature		Too high temperature measured in power unit's heatsink or board. Heatsink temperature is over 100°C.	Check the correct amount and flow of cooling air. Check the heatsink for dust. Check the ambient temperature. Make sure that the switching frequency is not too high in relation to ambient temperature and motor load.
15	Motor stalled		Motor is stalled.	Check motor and load. Insufficient motor power, check motor stall protection parametrization.
16	Motor overtemperature		Motor is overloaded.	Decrease motor load. If no motor overload exists, check the temperature model parameters.
17	Motor underload		Motor is under loaded	Check load. Check underload protection parametrization.
19	Power overload		Supervision for drive power	Drive power is to high: decrease load.
25	Watchdog		Error in the microprocessor monitoring Malfunction Component fault	Reset the fault and restart. If the fault occurs again, please contact your closest Vacon representative.
27	Back EMF		Protection of unit when starting with rotating motor	Reset the fault and restart. Should the fault re-occur, contact the distributor near to you.
30	Safe Torque Off		Safe torque off signal does not allow drive to be set as ready	Reset the fault and restart. Should the fault re-occur, contact the distributor near to you.

Table 78. Fault codes and descriptions.

Fault code	Fault name	Subcode	Possible cause	Remedy
35	Application error	0	Firmware Interface version between Application and Control not matching	Load a compatible application. Please contact your closest Vacon representative.
		1	Application software flash error	Reload Application
		2	Application header error	Load a compatible application. Please contact your closest Vacon representative.
41	IGBT temp		IGBT temperature (UnitTemperature + I2T) too high	Check loading. Check motor size. Make identification run.
50	4 mA fault (Analog input)		Selected signal range: 4...20 mA (see Application Manual) Current less than 4 mA Signal line broken detached The signal source is faulty	Check the analog input's current source and circuit.
51	External fault		Error message on digital input. The digital input was programmed as an input for external error messages. The input is active.	Check the programming and check the device indicated by the error message. Check the cabling for the respective device as well.
52	Keypad Communication fault		The connection between the control keypad and the frequency converter is broken.	Check keypad connection and keypad cable.
53	Fieldbus communication fault		The data connection between the fieldbus master and fieldbus board is broken	Check installation and fieldbus master.
54	Fieldbus Interface error		Defective option board or slot	Check board and slot.
55	Wrong run command		Wrong run alarm and stop command	Run forward and backward are activated at the same time
56	Temperature		Temperature fault	Board OPTBH is installed and measured temperature is above (or below) the limit
57	Identification		Identification alarm	Motor identification has not been successfully completed
63	Quick Stop		Quick Stop activated	The drive has been stopped with Quick Stop digital input or Quick Stop command by fieldbus

Table 78. Fault codes and descriptions.

7.5 LED HANDLING

As VACON® 20 X is often without the keypad, on the plastic cover of the drive there are 4 status LEDs. See the picture below.

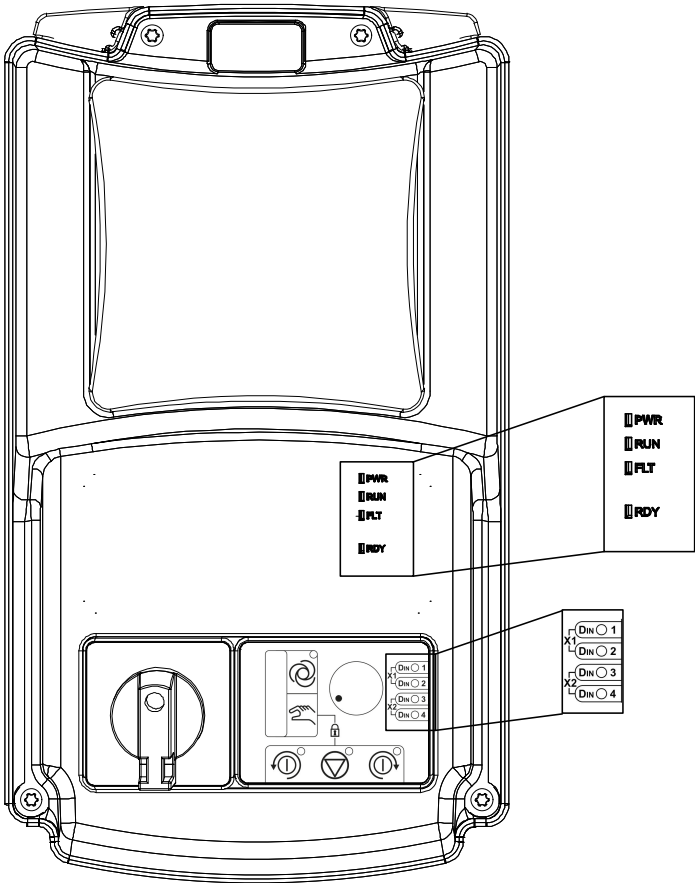

Figure 33. LED position on the MU2 cover.

Led "PWR" (orange led) means the drive is supplied by mains.

Led "RUN" (green led) means the drive is running.

Led "FLT" (red led) means the drive is experiencing a fault.

Led "RDY" (orange led) means the drive is ready and no fault is present. When a Warning is active, the led starts blinking.

Led "DIN 1" (green led) means the digital input 1 status.

Led "DIN 2" (green led) means the digital input 2 status.

Led "DIN 3" (green led) means the digital input 3 status.

Led "DIN 4" (green led) means the digital input 4 status.

8. SAFE TORQUE OFF

This chapter describes the Safe Torque Off (STO) function which is a functional safety feature present into VACON® 20 X drive products as standard.

8.1 GENERAL DESCRIPTION

The STO function brings the motor in no-torque-state as defined by 4.2.2.2 of the IEC 61800-5-2: *"Power that can cause rotation (or motion in the case of a linear motor) is not applied to the motor. The Power Drive System (Safety Related) will not provide energy to the motor which can generate torque (or force in the case of a linear motor)."*

Therefore, the STO function is suitable for applications that rely on the immediate removal of power to the actuator, resulting in an uncontrolled coast to stop (activated by an STO demand). **Additional protective measures need to be applied when an application requires a different stop method**.

8.2 WARNINGS

⚠	Designing of safety-related systems requires specialist knowledge and skills. Only qualified people are permitted to install and set up the STO function. The use of STO does not itself ensure safety. **An overall risk evaluation is required for ensuring that the commissioned system is safe.** Safety devices must be correctly incorporated into the entire system which must be designed in compliance with all relevant standards within the field of industry.
⚠	The information in this manual provides guidance on the use of the STO function. This information is in compliance with accepted practice and regulations at the time of writing. However, the end product/system designer is responsible for ensuring that the **end-system** is safe and in compliance with relevant regulations.
⚠	When a permanent magnet motor is used and in case of a multiple IGBT power semiconductor failure, when the STO option energizes the drive outputs to the off state, the drive system may still provide an alignment torque which maximally rotates the motor shaft by 180°/p (where p is the number of poles of the motor) before the torque production ceases.
⚠	Electronic means and contactors are not adequate for protection against electric shock. The Safe Torque Off function does not disconnect the voltage or the mains from the drive. Therefore hazardous voltages may still be present on the motor. If electrical or maintenance work has to be carried out on electrical parts of the drive or the motor, the drive has to be completely isolated from the main supply, e.g. using an external supply disconnecting switch (see EN60204-1 section 5.3).
⚠	This safety function corresponds to an uncontrolled stop in accordance with stop category 0 of IEC 60204-1. The STO function does not comply with Emergency Switching Off according to IEC 60204-1 (no galvanic insulation from the Mains in case the motor is stopped).
⚠	The STO function is not a prevention of unexpected start-up. To fulfil those requirements, additional external components are required according to appropriate standards and application requirements.
⚠	In circumstances where external influences (e.g. falling of suspended loads) are present additional measures (e.g. mechanical brakes) may be necessary to prevent any hazard.
⚠	STO shall not be used as a control for starting or stopping the drive.

8.3 STANDARDS

The STO function has been designed for use in accordance with the following standards:

Standards
IEC 61508, Parts 1-7
EN 61800-5-2
EN 62061
ISO 13849-1
EN 954-1
IEC 60204-1

Table 79. Safety Standards.

The STO function has to be applied correctly to achieve the desired level of operational safety. Only one level is allowed with Vacon 20X and D-option(see the following table).

Cat.	PL	SIL
1	c	1

Table 80. STO safety level.

The same values are calculated for SIL and SIL CL. According to EN 60204-1, the emergency stop category is 0.

The SIL value for the safety related system, operating in high demand/continuous mode, is related to the probability of dangerous failure per hour (PFH), reported in the following table.

PFH	PFDav	MTTFd (years)	DCavg
9.2 E-10 1/h	8.0 E-05	8314 y	NONE

Table 81. STO SIL 1 values.

The STO inputs must always be supplied by a safety device.
The power supply of the safety device has to be external (not taken from the drive).

8.4 THE PRINCIPLE OF STO

The STO functionality, such as the technical principles and data (wiring examples and commissioning) will be described in this chapter.

In VACON® 20 X, the STO function is realized by preventing the propagation of the control signals to the inverter circuit.

The inverter power stage is disabled through a galvanically isolated STO input (S1-G1). The operating conditions of the STO function are indicated in the following table:

STO inputs	Operating conditions	Torque at the motor shaft
Input energized with 24V DC	Normal operation	present (motor on)
Power removed from input	STO demand	disabled (motor de-energized)

Table 82. Values of the torque on the motor.

8.4.1 TECHNICAL DETAILS

The STO input is a digital input intended for a nominal 24V d.c. input, positive logic (e.g. enabled when high).

Technical information:	Technical values
Absolute maximum voltage range	24V ±20%
Typical input current at 24V	10...15 mA
Logic threshold	according to IEC 61131-2 15V....30V = "1" 0V....5V = "0"
Response time at nominal voltage:	
Reaction time	<20ms

Table 83. Electrical data.

The reaction time of the STO function is the amount of time which passes from the moment in which the STO is demanded until the system is in the Safe State. For VACON® 20 X, the reaction time is 20 ms maximum.

⚠	Make sure that the frequency converter is switched off before cabling.
⚠	When the STO function is used, **the IP-class of the drive may not be reduced below IP54**. The IP-class of drive is IP65. It can be reduced by the wrong use of the cable terminals .

8.5 CONNECTIONS

8.5.1 SAFETY CAPABILITY CAT.1 / PL C / SIL 1

The STO input must be supplied by a safety push button or a safety relay.

⚠	The standards for functional safety require that functional proof tests are performed on the equipment at user-defined intervals. Therefore, **this safety capability** can be achieved, as long as the STO function is manually monitored at the frequency determined by the specific application **(once a month can be acceptable)**.
⚠	This **safety capability** can be achieved by connecting the STO input externally.

The picture below shows an example of connection for the STO function. A switch (a safety push button or a safety relay) may be connected with 2 wires to the drive. When the contacts of the switch are opened, the STO is demanded, the drive indicates F30 (="Safe Torque Off") and the motor stops by coasting.

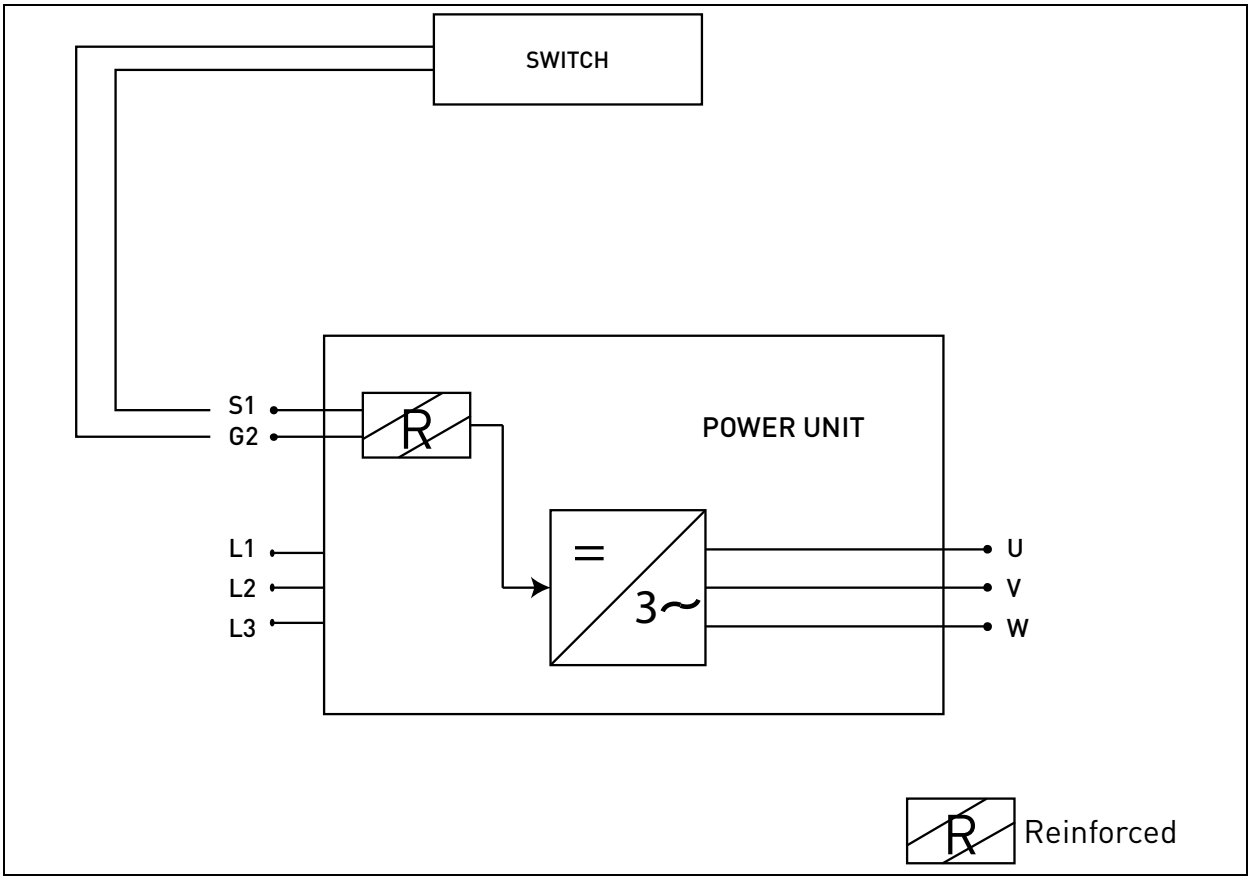

Figure 34. STO SIL 1 example of connection.

8.6 Commissioning

8.6.1 General wiring instructions

⚠	Protect the STO cabling with a shielding or an enclosure to exclude external damage.

The wiring should be done according to the general wiring instructions for the specific product. A shielded cable is required. In addition, the voltage drop from the supply point to the load shall not exceed 5% [EN 60204-1 part 12.5].

8.6.2 Checklist for commissioning

Follow the checklist shown in the table below for steps required to use the STO function.

☐	Carry out a risk assessment of the system to ensure that the use of the STO function is safe and according to the local regulations
☐	Include in the assessment an examination of whether the use of external devices, such as a mechanical brake, are required.
☐	Check if the switch (if used) has been chosen according to the required safety performance target (SIL/PL/Category) set during the risk evaluation
☐	Check if the reset function with the STO function (if used) is edge sensitive.
☐	The shaft of a permanent magnet motor might, in an IGBT fault situation, still provide energy before the torque production ceases. This may result in a jerk of max. 180° electrically. Ensure that the system is designed in such a way that this can be accepted.
☐	Check if the degree of protection of the **enclosure is at least IP54.** See paragraph 8.5.
☐	Check if the recommendations on EMC for cables have been followed.
☐	Check if the system has been designed in such a way that enabling of the drive through STO inputs will not lead to an unexpected start of the drive
☐	Check if only approved units and parts have been used.
☐	Set up a routine to ensure that the functionality of the STO function is being checked at regular intervals.

Table 84. Checklist for commissioning of STO.

8.7 PARAMETERS AND FAULT TRACING

There are no parameters for the STO function itself.

⚠	Before testing the STO function, make sure that the checklist (Table 84) is inspected and completed.
⚠	When STO function is demanded, the drive always generates a fault ("F30") and the motor stops by coasting.
⚠	In the application the STO state can be indicated using a digital output.

To re-enable motor operation, after the STO state, it is necessary to perform the following steps:

- Release the switch or the external device ("F30" is displayed even after this has been released).
- Reset the fault (through a digital input or from the keypad).
- It is possible that a new start command is required for the restart (depending on the application and your parameter settings).

8.8 MAINTENANCE AND DIAGNOSTICS

⚠	If any service or repair has to be conducted on the drive installed, please inspect the checklist given in Table 84.
⚠	During maintenance breaks, or in case of service/repair, **ALWAYS** make sure that the STO function is available and fully functional by testing it.

The STO function or the STO input terminals do not need any maintenance.

The following table shows faults that may be generated by the software that monitors the hardware related to the STO safety function. If you detect any failure in safety functions, including STO, contact your local Vacon supplier.

Fault Code	Fault	Cause	Correction
30	Safe Torque Off	Safe torque off signal does not allow drive to be set as ready	Reset the fault and restart. Should the fault re-occur, contact the distributor near to you.

Table 85. Fault related to the STO function.

VACON®

www.danfoss.com

Document ID:

DPD01623C

Rev. C

Danfoss A/S
Nordborgvej 81
6430 Nordborg
Denmark