Anybus® BY HMS NETWORKS

Anybus® CompactCom B30

DESIGN GUIDE

HMSI-27-242 2.1 en-US ENGLISH

HMS Connecting Devices™

Important User Information

Liability

Every care has been taken in the preparation of this document. Please inform HMS Industrial Networks of any inaccuracies or omissions. The data and illustrations found in this document are not binding. We, HMS Industrial Networks, reserve the right to modify our products in line with our policy of continuous product development. The information in this document is subject to change without notice and should not be considered as a commitment by HMS Industrial Networks. HMS Industrial Networks assumes no responsibility for any errors that may appear in this document.

There are many applications of this product. Those responsible for the use of this device must ensure that all the necessary steps have been taken to verify that the applications meet all performance and safety requirements including any applicable laws, regulations, codes, and standards.

HMS Industrial Networks will under no circumstances assume liability or responsibility for any problems that may arise as a result from the use of undocumented features, timing, or functional side effects found outside the documented scope of this product. The effects caused by any direct or indirect use of such aspects of the product are undefined, and may include e.g. compatibility issues and stability issues.

The examples and illustrations in this document are included solely for illustrative purposes. Because of the many variables and requirements associated with any particular implementation, HMS Industrial Networks cannot assume responsibility for actual use based on these examples and illustrations.

Intellectual Property Rights

HMS Industrial Networks has intellectual property rights relating to technology embodied in the product described in this document. These intellectual property rights may include patents and pending patent applications in the USA and other countries.

Table of Contents

Page

1 Preface 3

1.1 About this Document 3
1.2 Related Documents 3
1.3 Document history 3
1.4 Document Conventions 4
1.5 Document Specific Conventions 4
1.6 Trademark Information 5

2 About the Anybus CompactCom B30 6

2.1 General Information 6
2.2 Features 7

3 Host Interface 8

3.1 Overview 8
3.2 Host Application Connector 9
3.3 Host Interface Signals 10
3.4 Signal Descriptions 11
3.5 Parallel Interface Operation 14
3.6 Serial Interface Operation 18
3.7 General Purpose I/O 19

4 Network Connector 20

5 EMC 22

5.1 General 22
5.2 Bulk and Decoupling 22
5.3 Reset Signal 22

A Mechanical Specification 23

A.1 Mounting 23
A.2 Dimensions 27

B Technical Specification 33

B.1 Environmental 33
B.2 Shock and Vibration 33
B.3 Electrical Characteristics 34
B.4 Regulatory Compliance 35

C Implementation Guidelines 36

C.1 Additional Address Lines (A[11...13]) 36

C.2 Network Status LED outputs (LED[1A...2B]) 37

C.3 Typical Implementation (3.3 V) 39

C.4 Interfacing to 5V Logic 40

C.5 Power Supply Considerations 41

C.6 Bypass Capacitance 42

C.7 3.3 V Regulation 42

D B30 Connector/Socket 43

1 Preface

1.1 About this Document

This document is intended to provide a good understanding of how to use the Anybus CompactCom B30.

The reader of this document is expected to be familiar with hardware design and communication systems in general. For additional information, documentation, support etc., please visit the support website at www.anybus.com/support.

1.2 Related Documents

Document	Author	Document ID
Anybus CompactCom 30 Software Design Guide	HMS	HMSI-168-97
Anybus CompactCom 30 Network Guides	HMS	
Anybus CompactCom Host Application Implementation Guide	HMS	HMSI-27-334

1.3 Document history

Version	Date	Description
1.00	2015-08-28	First version (FM). The manual has been derived from the now obsolete Anybus CompactCom Brick and without Housing Appendix (HMSI-168-30)
2.0	2019-01-17	Moved from FM to XML, restructured Misc. updates
2.1	2019-02-25	Rebranding

1.4 Document Conventions

Ordered lists are used for instructions that must be carried out in sequence:

1. First do this
2. Then do this

Unordered (bulleted) lists are used for:

- Itemized information
- Instructions that can be carried out in any order

...and for action-result type instructions:

► This action...

→ leads to this result

Bold typeface indicates interactive parts such as connectors and switches on the hardware, or menus and buttons in a graphical user interface.

```
Monospaced text is used to indicate program code and other
kinds of data input/output such as configuration scripts.
```

This is a cross-reference within this document: *Document Conventions, p. 4*

This is an external link (URL): www.hms-networks.com

This is additional information which may facilitate installation and/or operation.

This instruction must be followed to avoid a risk of reduced functionality and/or damage to the equipment, or to avoid a network security risk.

Caution
This instruction must be followed to avoid a risk of personal injury.

WARNING
This instruction must be followed to avoid a risk of death or serious injury.

1.5 Document Specific Conventions

- The terms “Anybus” or “module” refers to the Anybus CompactCom module.
- The terms “host” or “host application” refer to the device that hosts the Anybus.
- Hexadecimal values are written in the format NNNNh or 0xNNNN, where NNNN is the hexadecimal value.
- A byte always consists of 8 bits.
- All dimensions in this document have a tolerance of ±0.10 mm unless otherwise stated.
- Outputs are TTL compliant unless otherwise stated.
- Signals which are “pulled to GND” are connected to GND via a resistor.
- Signals which are “pulled to 3V3” are connected to 3V3 via a resistor.
- Signals which are “tied to GND” are directly connected to GND,

- Signals which are “tied to 3V3” are directly connected to 3V3.

1.5.1 PIN Types

The pin types of the connectors are defined in the table below. The pin type may be different depending on which mode is used.

Pin type	Definition
I	Input
O	Output
I/O	Input/Output (bidirectional)
OD	Open Drain
Power	Pin connected directly to module power supply, GND or 3V3

1.6 Trademark Information

Anybus® is a registered trademark of HMS Industrial Networks.

EtherCAT® Conformance tested

EtherCAT® is a registered trademark and patented technology, licensed by Beckhoff Automation GmbH, Germany.

All other trademarks are the property of their respective holders.

2 About the Anybus CompactCom B30

2.1 General Information

The Anybus CompactCom B30 concept is developed for applications where the standard Anybus CompactCom M30 cannot be used. The brick consists of a board with network connectivity functionality, where the customer provides the physical network interface, including network connectors.

All dimensions expressed in this document are stated in millimeters and have a tolerance of ±0.10 mm unless stated otherwise.

All network communication is directed through a pin connector from the brick to the host application board. This enables full Anybus CompactCom functionality for all applications without loss of network compatibility or environmental characteristics.

Typical devices are sensors, bar-code scanners, HMIs, medical devices, valves, nut runners etc.

For general information about the Anybus CompactCom 30 platform, consult the Anybus CompactCom 30 Software Design Guide.

> **!** This a class A product. In a domestic environment, this product may cause radio interference in which case the user may be required to take adequate measures.
>
> This product contains ESD (Electrostatic Discharge) sensitive parts that may be damaged if ESD control procedures are not followed. Static control precautions are required when handling the product. Failure to observe this may cause damage to the product.

2.1.1 Available Fieldbuses and Industrial Networks

- PROFIBUS DPV1
- EtherNet/IP™
- EtherCAT
- PROFINET
- Modbus TCP
- DeviceNet™

2.2 Features

- A small, cost efficient, semi-integrated multi network solution through just one development project
- Full network access thanks to the generic firmware interface (one driver) and hardware interface
- Safe and secure mounting of the brick interface to the host PCB design
- Integrated Anybus NP30 network processor
- Full connector flexibility on the network side (DSUB, RJ45, M12 etc)
- Attached when needed - modular and pluggable

> **!** All Anybus CompactCom B30 will be precertified for network conformance. This is done to ensure that the final product can be certified, but it does not necessarily mean that the final product does not require recertification. Contact HMS Industrial Networks for further information.

3 Host Interface

This chapter describes the low level properties of the Anybus CompactCom interface

3.1 Overview

The Anybus CompactCom has two different host communication interfaces, corresponding to different operating modes. The figure below illustrates the basic properties of these interfaces as well as various I/O and control signals, and how they relate to the host application.

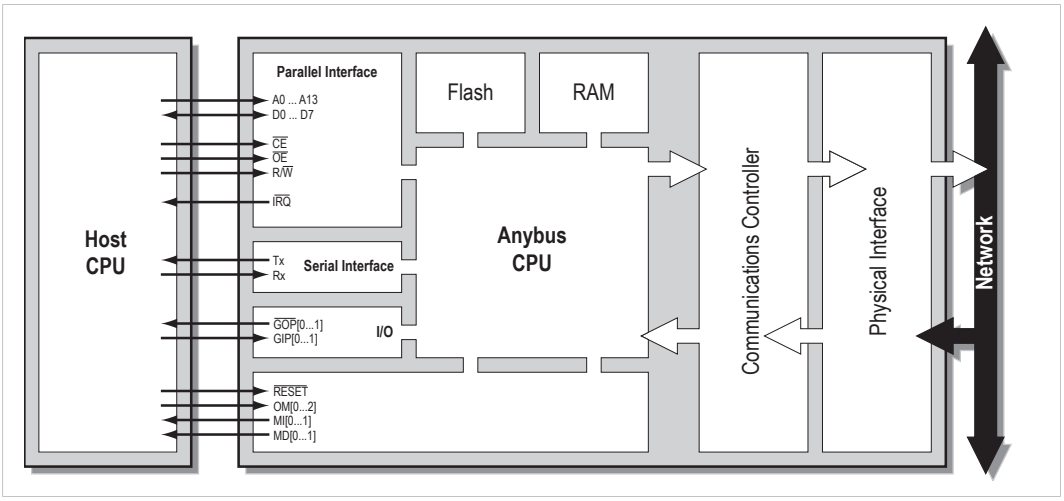

Fig. 1

Please note that only one communication interface at a time is available. Which one is decided at startup.

3.1.1 Parallel Interface

From an external point of view, the parallel interface is a common 8-bit parallel slave port interface, which can easily be incorporated into any microprocessor based system that has an external address/data bus. Generally, implementing this type of interface is comparable to implementing an 8-bit or 16-bit wide SRAM. Additionally, the parallel interface features an interrupt request line, allowing the host application to service the module only when actually needed.

3.1.2 Serial Interface (UART)

Compared to the serial interface, the parallel interface generally offers much higher performance. However, in some applications this solution may be impractical, e.g. when the host CPU doesn't have an external address/data bus etc. In such cases, the serial interface provides a simple way of interfacing the module via a common asynchronous serial interface.

3.2 Host Application Connector

The Anybus CompactCom uses a 50–pin CompactFlash™ style connector. The pinning is seen from the host application side of the Anybus CompactCom module

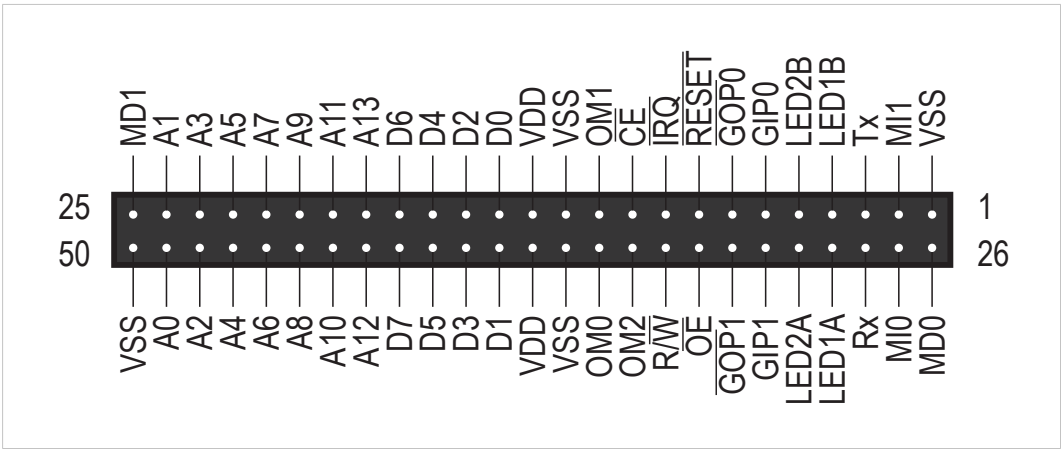

Fig. 2

See .*Host Interface Signals, p. 10* for information on how each pin is used in the different modes.

> **!** The host interface is not pin compatible with the CompactFlash™ standard. Also, prior to exchanging a module, power should be turned off or the MD (module detection signals should be used to shut down communication and power when the module is removed. Failure to observe this may cause damage to the host product and/or the Anybus CompactCom brick.

Pin type	Definition
I	Input, CMOS (3.3 V)
O	Output, CMOS (3.3 V)
BI	Bidirectional, Tristate
PWR	Power supply inputs
NC	Not connected

> *None of the host interface signals are 5 V tolerant.*

3.3 Host Interface Signals

Each signal presented in the tables below is described in detail later in this document.

For mechanical properties, dimensions, etc. see *Mechanical Specification, p. 23*.

For electrical characteristics, see *Electrical Characteristics, p. 34*.

Position	Signal	Type	Function
36, 11, 35	OM[0...2]	I	Operating Mode
27, 2	MI[0...1]	O	Module Identification
8	$\overline{\text{RESET}}$	I	Reset Input, active low
26, 25	MD[0...1]	O	Module Detection
14, 39, 15, 40, 16, 41, 17, 42	D[0...7]	BI	Parallel Interface Please note that when the serial interface is used by the Anybus CompactCom B30, signals A12 and A13 can be used for functional safety communication (Anybus CompactCom 30 PROFINET 2-Port module only). For more information, see *Safety Serial Interface (PROFINET 2-port only), p. 13*.
49, 24, 48, 23, 47, 22, 46, 21, 45, 20, 44, 19, 43, 18	A[0...13]	I	
10	$\overline{\text{CE}}$	I	
33	$\overline{\text{OE}}$	I	
34	R/$\overline{\text{W}}$	I	
9	$\overline{\text{IRQ}}$	O	
28	Rx	I	Serial Interface
3	Tx	O	
30	LED2A	O	Network Status LED Outputs
29	LED1A	O	
5	LED2B	O	
4	LED1B	O	
6, 31	GIP[0...1]	I	General Purpose I/O
7, 32	$\overline{\text{GOP[0...1]}}$	O	
13, 38	VDD	PWR	Power Supply
1, 12, 37, 50	VSS	PWR	Ground

3.4 Signal Descriptions

3.4.1 OM[0...2] (Operating Mode)

These inputs select which interface that should be used to exchange data (parallel or serial) and, if the serial interface option is used, the operating baud rate. The state of these signals is sampled once during startup, i.e. any changes requires a reset in order to have effect.

The state of these signals must be stable prior to releasing the RESET signal. Failure to observe this may result in faulty or unexpected behavior.

Setting			Operating Mode	
OM2	**OM1**	**OM0**	**Parallel interface State**	**Serial interface State**
LOW	LOW	LOW	Enabled	(disabled, se note below)
LOW	LOW	HIGH	(disabled, see note below)	Enabled, baud rate: 19.2 kbps
LOW	HIGH	LOW		Enabled, baud rate: 57.6 kbps
LOW	HIGH	HIGH		Enabled, baud rate: 115.2 kbps
HIGH	LOW	LOW		Enabled, baud rate: 625 kbps
HIGH	LOW	HIGH	(reserved)	
HIGH	HIGH	LOW		
HIGH	HIGH	HIGH	Service mode	

LOW = V_{IL}

HIGH = V_{IH}

For more information regarding the parallel and serial interfaces, see *Parallel Interface Operation, p. 14* and *Serial Interface Operation, p. 18*.

These signals have no effect on passive modules; instead the communication settings are determined by other network specific factors. Furthermore, a subset of the parallel interface signals are used for network identification purposes, see *Additional Address Lines (A[11...13]), p. 36*.

3.4.2 MI[0...1] (Module Identification)

These signals indicate which type of module that is connected. It is recommended to check the state of these signals before accessing the module.

State		Module Type
MI0	**MI1**	
LOW	LOW	Anybus CompactCom (Active module)
HIGH	LOW	Anybus CompactCom (Passive module)
LOW	HIGH	(reserved)
HIGH	HIGH	

LOW = V_{OL}

HIGH = V_{OH}

3.4.3 RESET (Reset Input)

The reset input is active low. It must be connected to a host application controllable output pin in order to handle the power up sequence, voltage deviations and to be able to support network reset requests.

The module does not feature any internal reset regulation. To establish a reliable interface, the host application is solely responsible for resetting the module when the supply voltage is outside the specified range. If this requirement is not fulfilled, a power brown-out (a drop in voltage) may cause unwanted side-effects such as data loss in nonvolatile memory etc.

There is no Schmitt trigger circuitry on this input, which means that the module requires a fast rise time of the reset signal, preferably equal to the slew rate of typical logical circuits. A simple RC circuit is for example not sufficient to guarantee stable operation, as the slew rate from logic 0 to logic 1 is too slow.

> **!** The rise time of the reset signal should be as fast as possible, and must not exceed 30 ns. The signal is not under any circumstances allowed to be left floating. Use a pull-down to prevent this.

The following requirements must be met by the reset regulator connected to the reset input signal.

Power Up

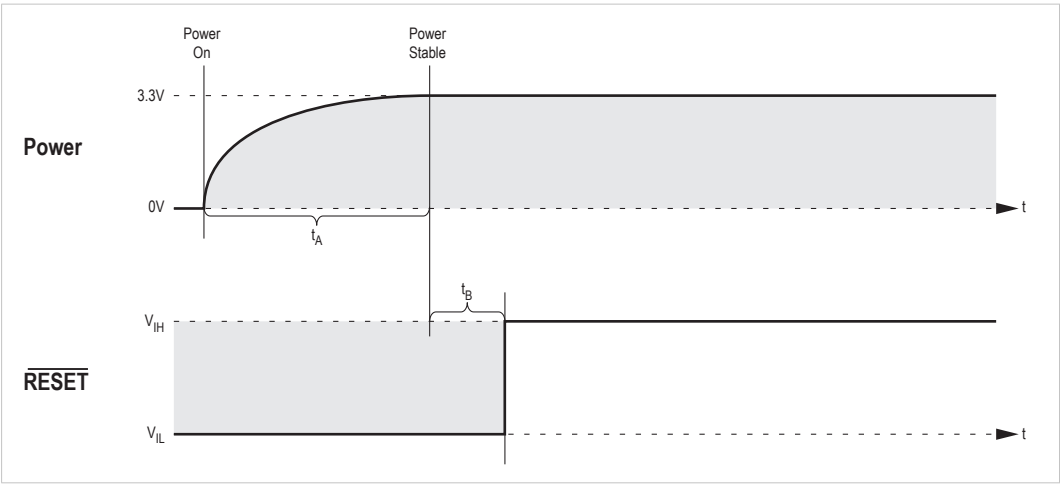

Fig. 3

Power up time limits are given in the table below:

Symbol	Min.	Max.	Definition
t_A	-	50 ms	Power supply rise time (0.1 VCC to 0.9 VCC).
t_B	100 ms	-	Safety margin.

Restart

The reset pulse duration must be at least 100 µs in order for the Anybus CompactCom B30 to properly recognize a reset.

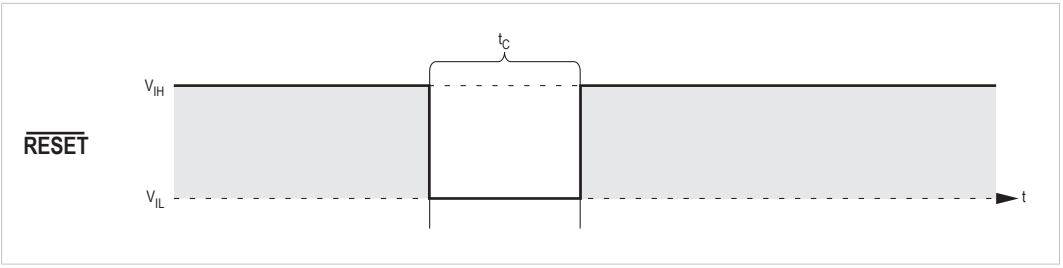

Fig. 4

Symbol	Min.	Max.	Definition
t_C	100 µs	-	Reset pulse width.

3.4.4 Parallel Interface

For a description of the parallel interface signals, see *Parallel Interface Operation, p. 14*.

3.4.5 Serial Interface

For a description of the serial interface signals, see *Serial Interface Operation, p. 18*.

3.4.6 Safety Serial Interface (PROFINET 2-port only)

If the parallel interface is used for the host application, the serial interface can be used for functional safety communication, using an add on safety module. If the host application uses the serial interface, an extra serial channel, only for functional safety communication, will be used:

Position	Signal	Type	Function
43	ASM_Rx	I	Functional safety communication. If a Safety Module is connected, these signals must not be tied to VDD.
18	ASM_Tx	O	

Functional safety communication is only available for Anybus CompactCom 30 PROFINET 2-port. For more information, see the Anybus CompactCom 30 PROFINET 2-port Network Guide.

3.4.7 Network Status LED Outputs

In some applications, the brick may be mounted in a fashion that does not enable the user to see the on-board network indication LEDs. The LED[1A....2B] outputs are directly connected to the internal CPU and the on-board LEDs, and can be used to relay the network status indications to elsewhere on the host application.

Note that these outputs are unbuffered and thus not capable of driving LEDs directly. If unused, leave them unconnected.

See also *Network Status LED outputs (LED[1A...2B]), p. 37*.

3.4.8 General Purpose I/O

See *General Purpose I/O, p. 19*.

3.5 Parallel Interface Operation

3.5.1 General Information

The parallel interface is based on an asynchronous dual port memory architecture, allowing the Anybus module to be interfaced directly as a memory mapped peripheral.

For increased efficiency, an optional interrupt request signal ($\overline{\text{IRQ}}$) allows the host application to service the Anybus module only when necessary. Polled operation is also possible, albeit at the cost of a slightly overhead.

On active modules, the parallel interface must be enabled using OM[0... 2].

See also *OM[0...2] (Operating Mode), p. 11*



The parallel interface does not support sequential or nonsequential burst access methods.

3.5.2 Parallel Interface Signals

The parallel interface uses the following signals:

Signal	Description	Notes
A[0...10]	Mandatory address input signals. Selects source/target location in shared memory.	Tie to VSS when unused
A[11...13]	Additional address input signals (optional) (See *Additional Address Lines (A[11...13]), p. 36*)	Please note that if a Safety Module is connected, these signals must not be tied to VDD. Tie to VDD when unused
D[0...7]	Bidirectional data bus. Target location is specified by A[0...13]	Tie to VSS when unused
CE	Bus chip enable; enables parallel access to the module when low.	A[0...13] must be stable while $\overline{CE}$ is active. Tie to VDD when unused
R/W	Bus read/write; enables input on D[0...7] when low.	Tie to VDD when unused
OE	Bus output enable; enables output on D[0...7] when low.	Tie to VDD when unused
IRQ	Active low Interrupt Request signal. Asserted by the Anybus module, and de-asserted (i.e. acknowledged) by the host application by reading the Status Register (3FFFh). Please note that due to technical reasons, the module may acknowledge interrupts even if $\overline{OE}$ has not been asserted, if this address (3FFFh) is present on the bus while $\overline{CE}$ is active. The use of this signal is optional though highly recommended. Even if the host application lacks interrupt capabilities, it is recommended to connect this signal to an input port to simplify software design. This signal must be pulled to VDD on the host application side to prevent spurious interrupts during startup.	Leave unconnected if unused

There are no internal pullup resistors on any of the signals above.

It is important to connect the serial interface signals correctly for proper functioning of the parallel interface. See *Serial Interface Signals, p. 18* for details.

3.5.3 Function Table (CE, R/W, OE, D[0...7])

$\overline{CE}$	R/$\overline{W}$	$\overline{OE}$	D[0...7] State	Comment
HIGH	X	X	High impedance	Module not selected.
LOW	LOW	X	Data Input (Write)	Data on D[0...7] is written to shared memory.
LOW	HIGH	LOW	Data Output (Read)	Data from shared memory is available on D[0...7]
LOW	HIGH	HIGH	High impedance	Module is selected, but D[0...7] is in a high impedance state.

X = Don’t care

LOW = V_{IL}

HIGH = V_{IH}

3.5.4 Timing Diagrams

- Timing depends on capacitive load. The figures in this section are valid for loads up to 25 pF.
- $\overline{CE}$ must be high at least 3 ns between two accesses. This is applicable in both Read and Write Cycle.

Read Access Timing

R/$\overline{W}$ = HIGH

Symbol	Parameter	Min.	Max.	Unit
tAV	Address Valid After Chip Enable	-	7	ns
tAA	Address Access Time	-	30	
tACE	Chip Enable Access Time	-	30	
tAR	Read Access Time	-	15	
tAH	Address Hold Time	0	-	
tLZ	Output Low-Z Time	0	-	
tHZ	Output High-Z Time	-	15	

- tAR: Start of valid data depends on which timing becomes effective last; tAR, tACE or tAA
- tLZ: Timing depends on which signal is asserted last, $\overline{OE}$ or $\overline{CE}$
- tHZ Timing depends on which signal is de-asserted first, $\overline{OE}$ or $\overline{CE}$

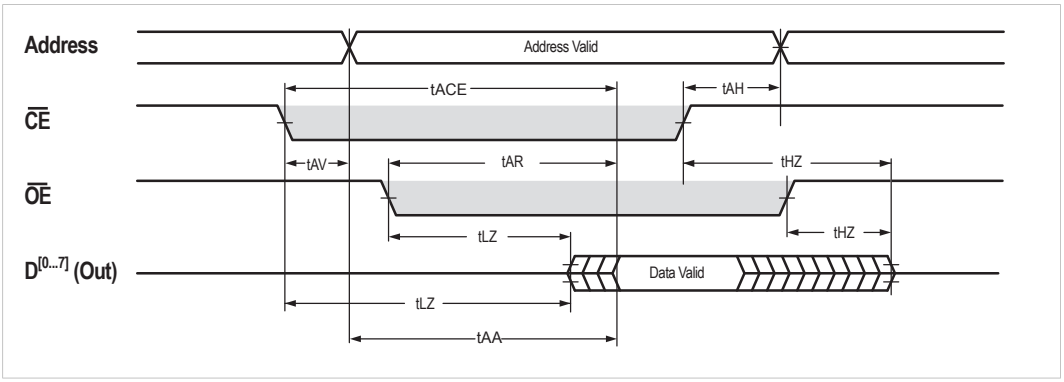

Fig. 5

Write Access Timing

Symbol	Parameter	Min.	Max.	Unit
tWC	Write Cycle Time	30	-	ns
tSW	Chip Enable to End-of-Write	25	-	
tAW	Address Valid to End-of-Write	25	-	
tAS	Address Set-up Time	0	-	
tWP	Write Pulse Width	25	-	
tAH	Address Hold Time	0		
tAV	Address Valid After Chip Enable	-	7	
tDW	Data Valid to End-of-Write	15	-	
tDH	Data Hold Time	0	-	

- tAS: Timing depends on which enable signal ($\overline{CE}$ or R/$\overline{W}$) is asserted last
- tWP: A write occurs during the overlap (tSW or tWP) of $\overline{CE}$ = LOW and R/$\overline{W}$ = LOW

Timing depends on capacitive load. The figures in this section are valid for loads up to 25 pF.

Write Cycle (R/W controlled timing)

$\overline{OE}$ = Don't care

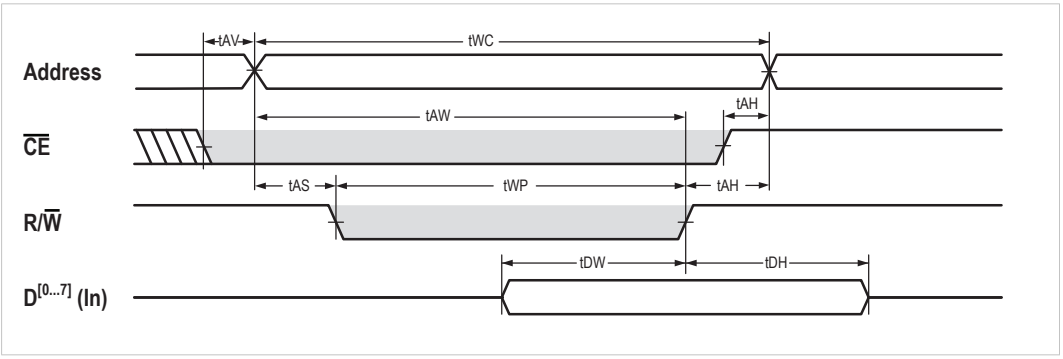

Fig. 6

Write Cycle (CE controlled timing)

$\overline{OE}$ = HIGH

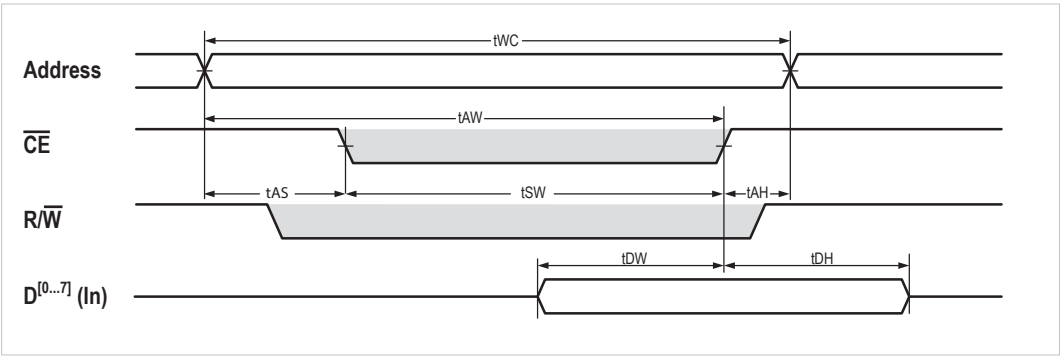

Fig. 7

3.6 Serial Interface Operation

3.6.1 General Description

The serial interface is a common asynchronous serial interface, which can easily be interfaced directly to a micro controller or UART (For connection examples etc., see *Interfacing to 5V Logic, p. 40*).

The serial interface is activated using the (OM[0...2]) inputs, which are also used to select the operating baud rate (see *OM[0...2] (Operating Mode), p. 11*).

Other communication settings are fixed to the following values:

Data bits: 8

Parity: None

Stop bits: 1

3.6.2 Serial Interface Signals

The serial interface option uses only two signals:

Signal	Description	Notes
Tx	TTL-compliant asynchronous serial transmit output. This signal must be pulled to VDD on the host application side.	Leave this signal unconnected when unused.
Rx	Asynchronous serial receive. (This input is *not* 5V tolerant) This signal must be pulled to VDD on the host application side.	Tie this signal to VDD when unused.

It is important to connect the parallel interface signals correctly for proper functioning of the serial interface. See *Parallel Interface Signals, p. 15* for details.

3.6.3 Baud Rate Accuracy

As with most asynchronous communication devices, the actual baud rate used on the Anybus CompactCom may differ slightly from the ideal baud rate.

The baud rate error of the Anybus module is less than ±1.5%. For proper operation, it is recommended that the baud rate accuracy in the host application lies within ±1.5% from the ideal value.

3.7 General Purpose I/O

3.7.1 General

The functionality of these signals is module type dependent. These signals have no dedicated function, but it is still generally recommended to connect these signals to discreet inputs/outputs in the host application to be prepared for future functionality.

Signal	Description	Notes
GIP0	General Input Port 0	Active high general purpose input ports. Preferably, connect these inputs to discreet outputs in the host application. These signals should be pulled to VSS on the host application. These ports can be used as outputs when extended LED functionality is enabled, see below. Tie to VSS if unused.
GIP1	General Input Port 1	
GOP0	General Output Port 0	Active low general purpose output ports. Preferably, connect these outputs to interrupt capable inputs on the host application. These signals should be pulled to VDD on the host application. If unused, leave these signals unconnected.
GOP1	General Output Port 1	

3.7.2 Functional Description

As mentioned previously, the function of these signals is different depending on module type. Please check the Implementation Details section in the network appendix for each module for more information.

At the time of writing, some bricks use these signals. For example, the General Purpose IO signals can, together with the LED[1A....2B] outputs, for some networks be used for extended LED functionality. However it is strongly recommended to implement the signals in the host application in order to be prepared for future functionality, whether or not they are used at the time being. Please consult the network appendices for more information.

4 Network Connector

The network connector that is mounted on the Anybus CompactCom B30, is used to transfer network signals to the host PCB. It is recommended to use the same connector/socket on the host PCB as on the Anybus CompactCom B30. Connection is established using a through hole terminal strip (included) as shown in the picture.

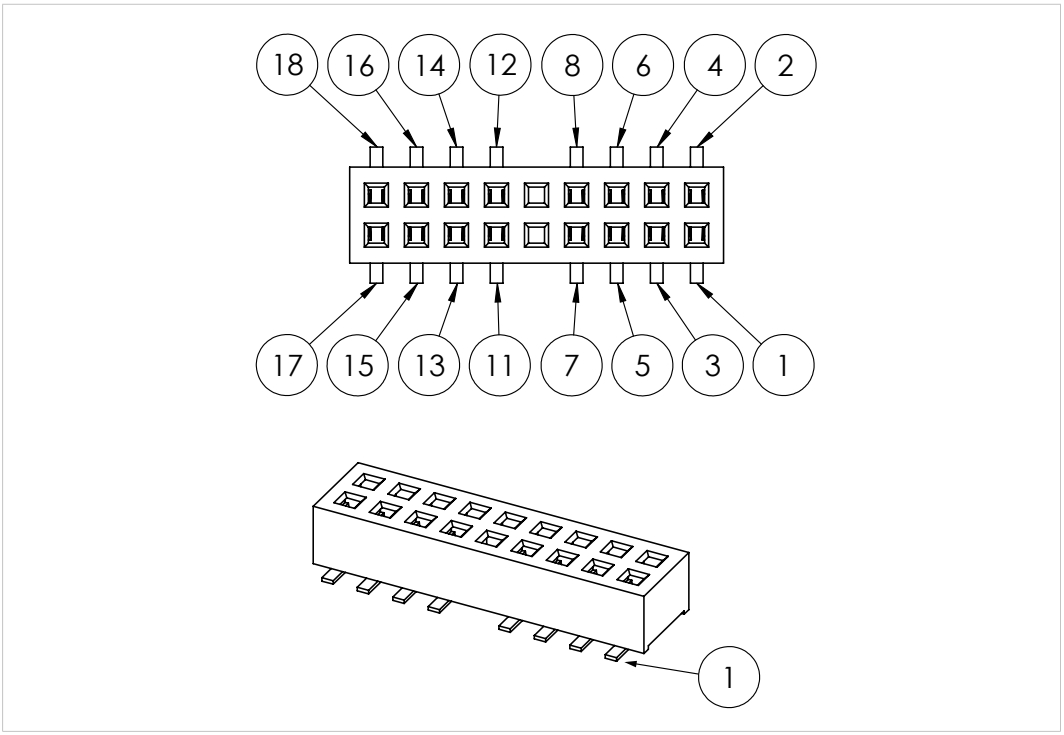

Fig. 8

The through hole terminal strip is included in the package, but the connector/socket has to be ordered separately. It is recommended to use the same connector/socket on the carrier board, as is mounted on the Anybus CompactCom B30.

Manufacturer	Samtec Part No.	HMS Order No.
Samtec www.samtec.com	ASP168929-03	RS1012

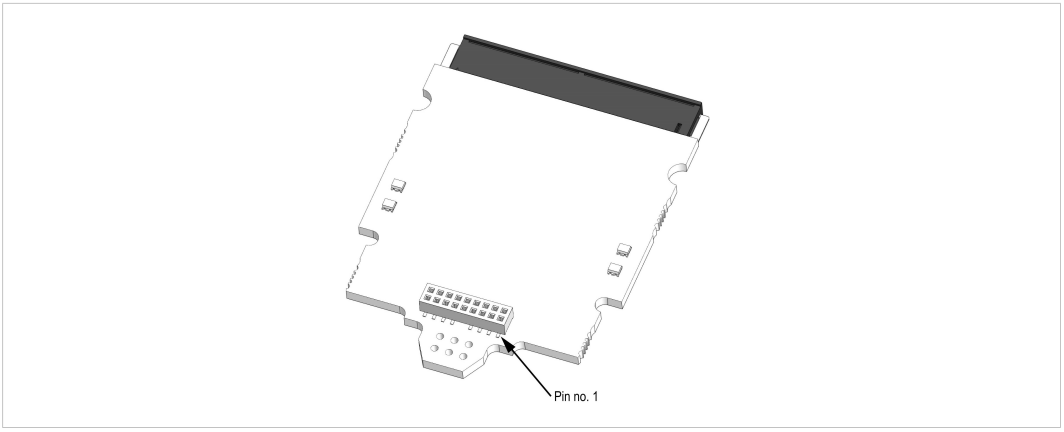

Fig. 9

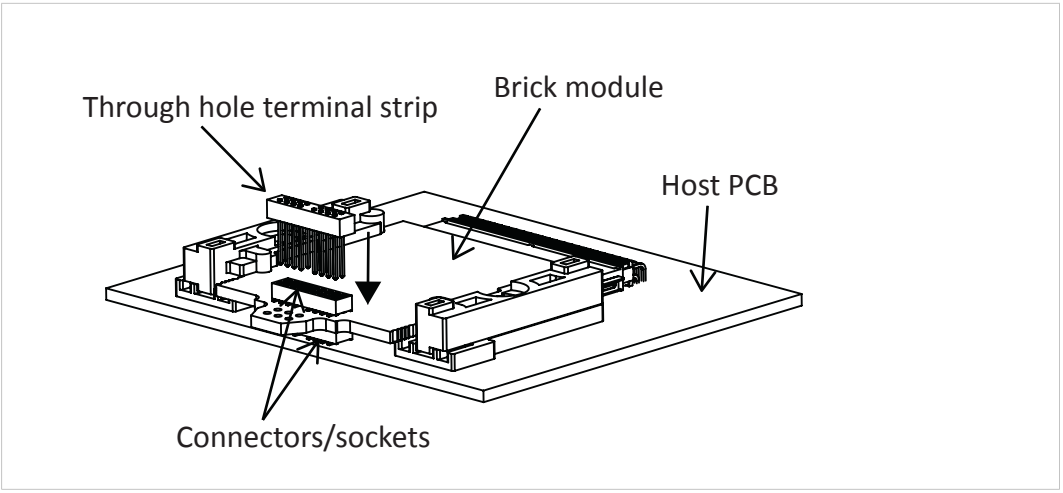

Fig. 10

Smaller quantities can be ordered from HMS Industrial Networks, but larger quantities should be ordered from Samtec directly, see *B30 Connector/Socket, p. 43*. When ordering, please mention that it is intended for indesign with an HMS Industrial Networks product.

The table below shows the network connector pin assignment.

Pin	DeviceNet		PROFIBUS		EtherNet/IP		Modbus TCP		EtherCAT		PROFINET	
1	Input	Shield	Input	Shield	Port 2	Shield	Port 2	Shield	Out-put	Shield	Port 2	Shield
2		V+		A		TXD+		TXD+		TXD+		TXD+
3		CAN_H		B		TXD-		TXD-		TXD-		TXD-
4		Shield		Shield		Shield		Shield		Shield		Shield
5		CAN_L		NC		Shield		Shield		Shield		Shield
6		V-		NC		RXD-		RXD-		RXD-		RXD-
7		Drain		NC		RSD+		RSD+		RSD+		RSD+
8		Shield		Shield		Shield		Shield		Shield		Shield
11	Out-put	Shield	Out-put	Shield	Port 1	Shield	Port 1	Shield	Input	Shield	Port 1	Shield
12		Drain		+5 V		TXD+		TXD+		TXD+		TXD+
13		V-		DGND		TXD-		TXD-		TXD-		TXD-
14		Shield		Shield		Shield		Shield		Shield		Shield
15		CAN_L		NC		Shield		Shield		Shield		Shield
16		CAN_H		B		RXD-		RXD-		RXD-		RXD-
17		V+		A		RSD+		RSD+		RSD+		RSD+
18		Shield		Shield		Shield		Shield		Shield		Shield

5 EMC

This section offers information, necessary when designing in an Anybus CompactCom B30, to ensure sufficient performance related to EMC. However, an engineering assessment is always needed to ensure the quality. HMS Industrial Networks does not leave any guarantees, but provides relevant information to the customers.

5.1 General

When working with a design in relation to EMC, it is recommended to always aim for good signal integrity, since this is highly related to the EMC. For power, this means solid planes for both power and GND together with good decoupling between the planes. As the quality of the power is of great importance, it is important to perform sufficient verifications during the design process to ensure this. This is also true for signals, where good signal integrity most likely results in good EMC performance. There should always exist good connection to a reference plan without any obstacles for the return current. Traces should also be kept short, with as few board and cable transitions as possible, since every transition will have a negative impact on the signal integrity.

For GND planes, the following basic design rules are important:

- A continuous and stable GND plane is needed underneath the B40 connectors in order to ensure good signal integrity.
- The plane must follow the signal path through the connector

Considering the host application connector, different protocols are more sensitive to interference than others. E.g. try to avoid using parallel and RMII interface in the design, if the recommendations in this section cannot be followed or if the risk of interference is high. To ensure stability, there has to be a sufficient separation on the host board between a parallel interface and an RMII interface.

5.2 Bulk and Decoupling

Recommendations regarding bulk and decoupling capacitors is presented in *Bypass Capacitance, p. 42*.

The capacitors have impact on the power quality at the Anybus CompactCom board, but are also of importance in relation to EMC immunity. These general recommendations should be evaluated for every design. The values may also need to be adjusted in relation to power consumption, power quality on the main board, and the layout of the main board.

5.3 Reset Signal

There are several aspects to consider when routing the reset signal for the Anybus CompactCom. Requirements for rise and fall time, but also the relation between the power up and the reset signal are described in *RESET (Reset Input), p. 12*. These requirements must be met in all designs to ensure stability. If the reset signal has a long trace or if there is any other aspect that has a negative impact on the signal integrity, an RC filter may be required. To minimize the risk of EMC problems, it is possible to add footprints for a RC-filter in advance and evaluate the need before it becomes a problem during any certification. When designing the filter, all timing aspects must be considered, so that the timing requirements in *RESET (Reset Input), p. 12* are fulfilled.

A Mechanical Specification

> **!** This a class A product. In a domestic environment, this product may cause radio interference in which case the user may be required to take adequate measures.
>
> This product contains ESD (Electrostatic Discharge) sensitive parts that may be damaged if ESD control procedures are not followed. Static control precautions are required when handling the product. Failure to observe this may cause damage to the product.

A.1 Mounting

The Anybus CompactCom B30 is mounted on the host PCB using the Anybus CompactCom Mounting Kit. Network signals are transferred to the host PCB using a network connector/socket, mounted on the brick and a corresponding connector/socket on the carrier board.

A.1.1 Anybus CompactCom Mounting Kit

The Anybus CompactCom Mounting Kit has been designed for applications where the standard Anybus CompactCom plug-in housing concept cannot be used. This enables full Anybus CompactCom functionality for all applications without loss of network compatibility or environmental characteristics.

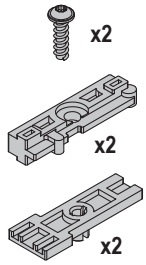

Fig. 11

The kit is easy to assemble, and is based on a few plastic parts which when assembled secures the Anybus module firmly onto the host application.

To support this concept in the host application, the PCB must be designed according to the footprint specification in this document.

To guarantee proper EMC behavior, it is also important that the application supports the FE (functional earth) and grounding mechanisms found on all Anybus CompactCom modules.

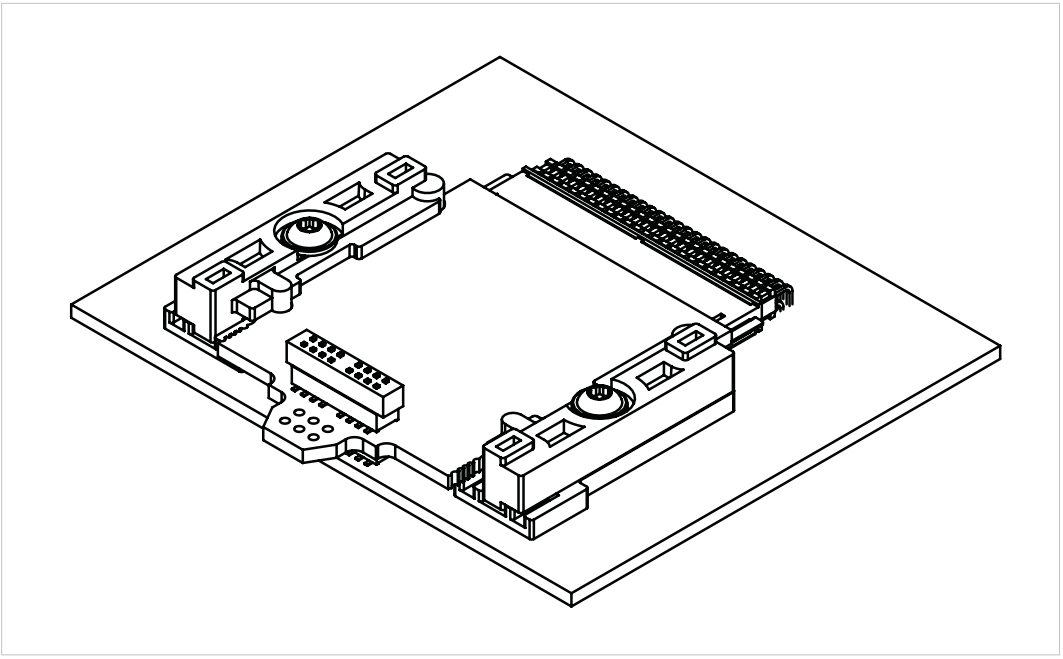

Fig. 12

A.1.2 Ordering Information

Part No.	Name	Contents
019180	ABCC Mounting Kit	100 x Bottom Part 100 x Top Part 100 x Screw

A.1.3 Footprint

The dimensions below are given in millimeters and include a tolerance of ±0.10 mm.

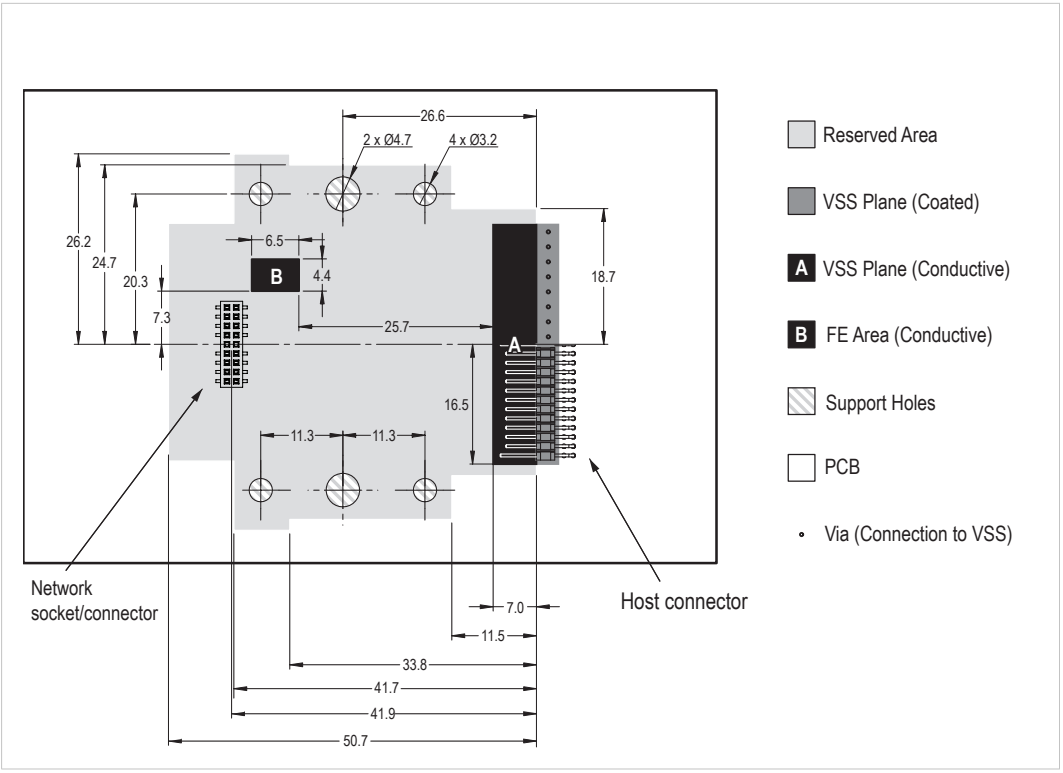

Fig. 13

A.1.4 Host Connectors

The following connectors have been found to be compatible with the mounting kit.

Manufacturer	Part No.	Comment	Web
Samtec	HPT-125-01-L-D-RA (recommended)	Through hole mounted	www.samtec.com
3M	N7E50-D516PG-30	Surface mounted	www.3m.com

The host connector pin assignment is the same as for the Anybus CompactCom M30.

A.1.5 Network Connector for Brick

The following connector/socket is mounted on the Anybus CompactCom B30 to transfer the network signals to the host PCB. It is recommended to use the same connector/socket on the host PCB. See *B30 Connector/Socket, p. 43* for details of this connector/socket

The through hole terminal strip is included in the package, but the connector/socket has to be ordered separately. It is recommended to use the same connector/socket on the carrier board, as is mounted on the Anybus CompactCom B30.

Manufacturer	Samtec Part No.	HMS Order No.
Samtec www.samtec.com	ASP168929-03	RS1012

Smaller quantities can be ordered from HMS, but larger quantities should be ordered from Samtec directly, see *B30 Connector/Socket, p. 43*. When ordering, please mention that it is intended for indesign with an HMS product.

A.1.6 Height Restrictions

The dimensions below are given in millimeters and include a tolerance of ±0.20 mm.

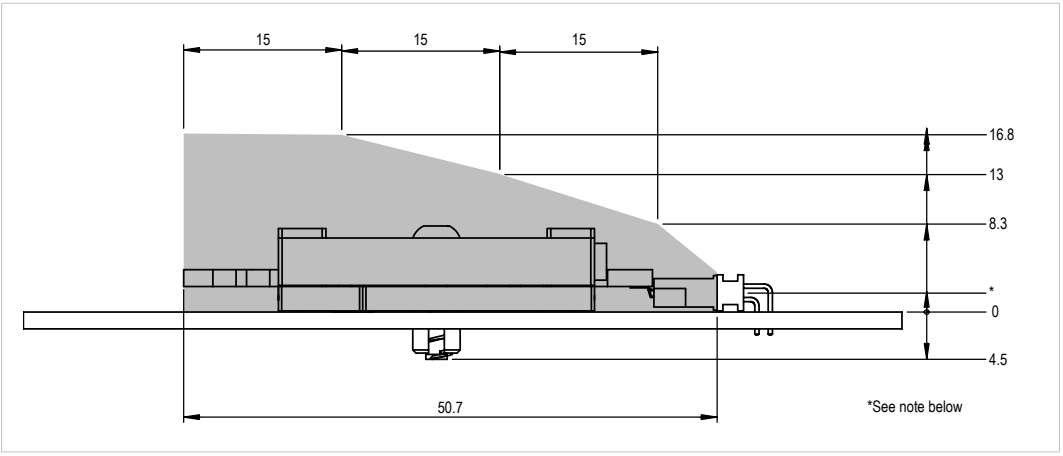

Fig. 14

The gray area in the figure above specifies the maximum height occupied by onboard components of the Anybus module. To ensure isolation, it is recommended to add an additional 2.5 mm on top of these dimensions.

To ensure stable connection to GND, use a connector that conforms to the distances from the PCB to the pins of the host connector, that are recommended in the picture. Tolerance (+0.35 mm, -0.05 mm).

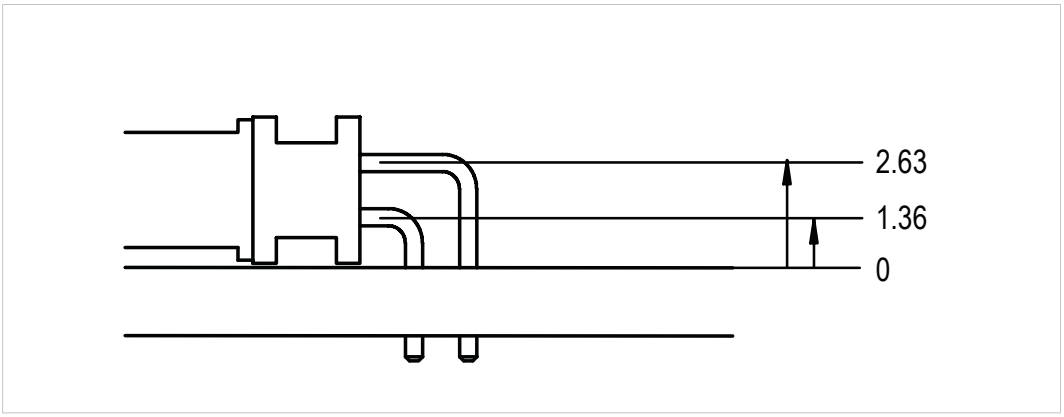

Fig. 15

A.1.7 Assembly

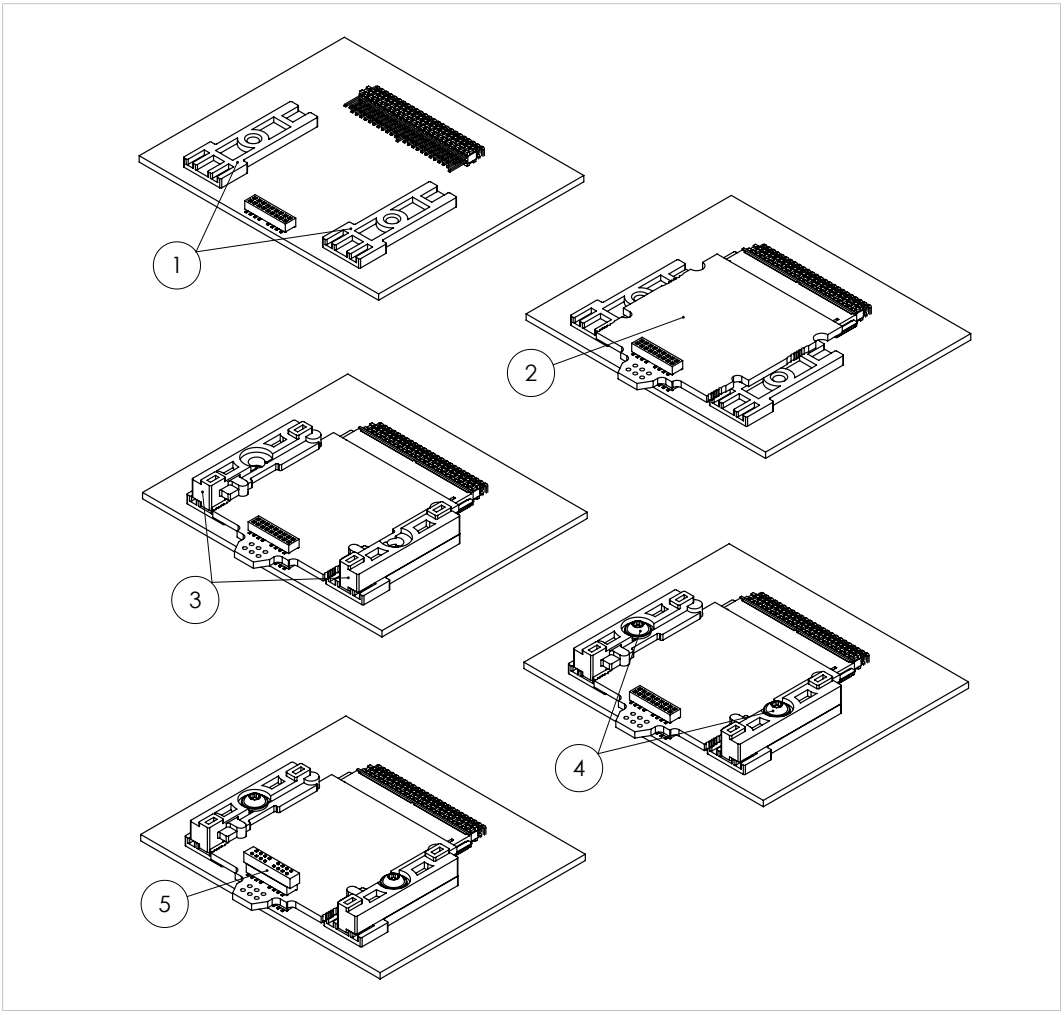

Fig. 16

Recommended torque value for the mounting screws is 0.3 Nm.

A.2 Dimensions

The dimensions below are given in millimeters and include a tolerance of ±0.20 mm.

A.2.1 General

No network connectors are attached to the brick, instead the signals pass via a pin connector to the host device.

The first picture shows the dimensions of the Brick PCB seen from the top. The pin holes furthest to the left are used for securing the front with the M12 connectors, and is not used in B30. Inside these holes the network connector is found. For signal assignment, see the corresponding network interface appendix.

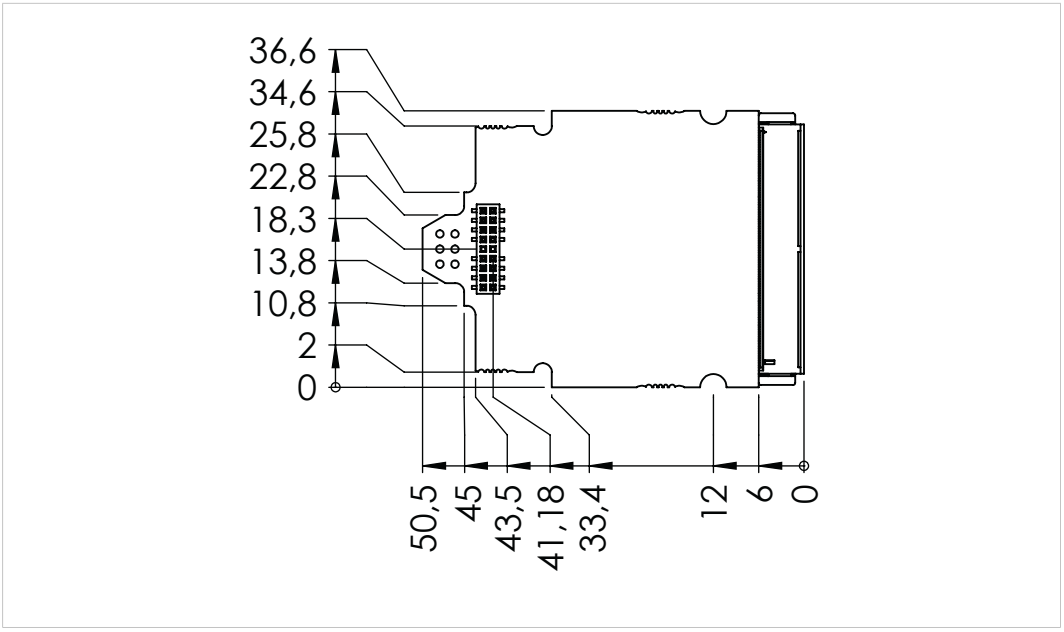

Fig. 17

The picture below shows the bottom view of the Brick PCB.

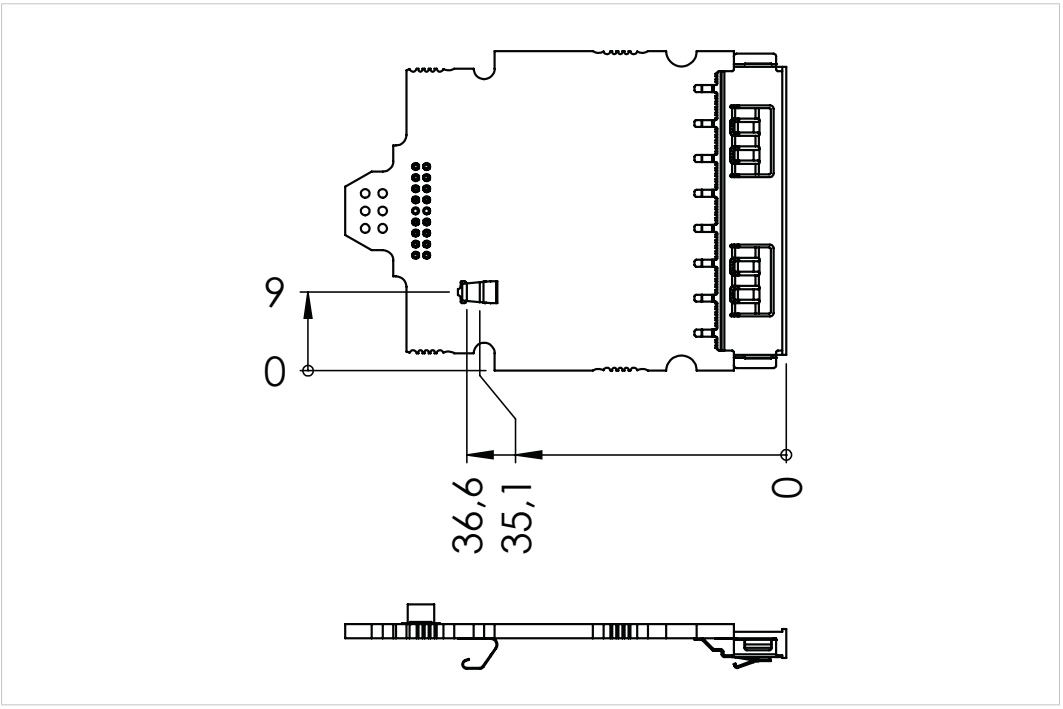

Fig. 18

A.2.2 Standard LED Positions

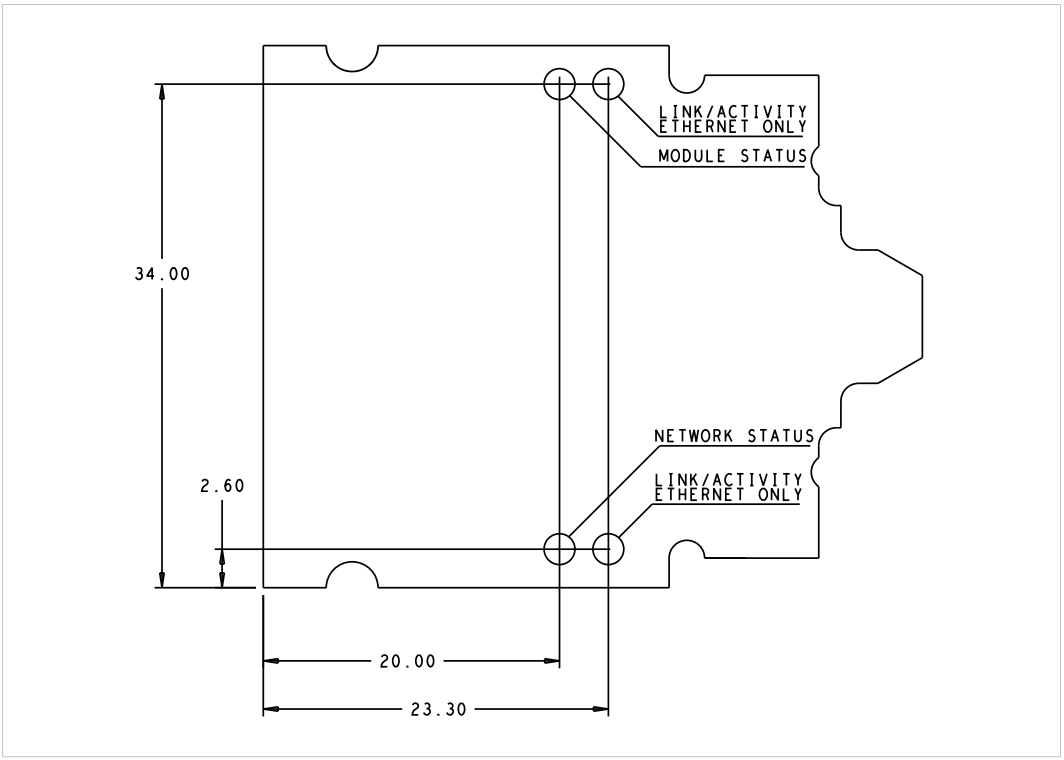

Fig. 19

A.2.3 Mounting Kit Parts

Bottom Part

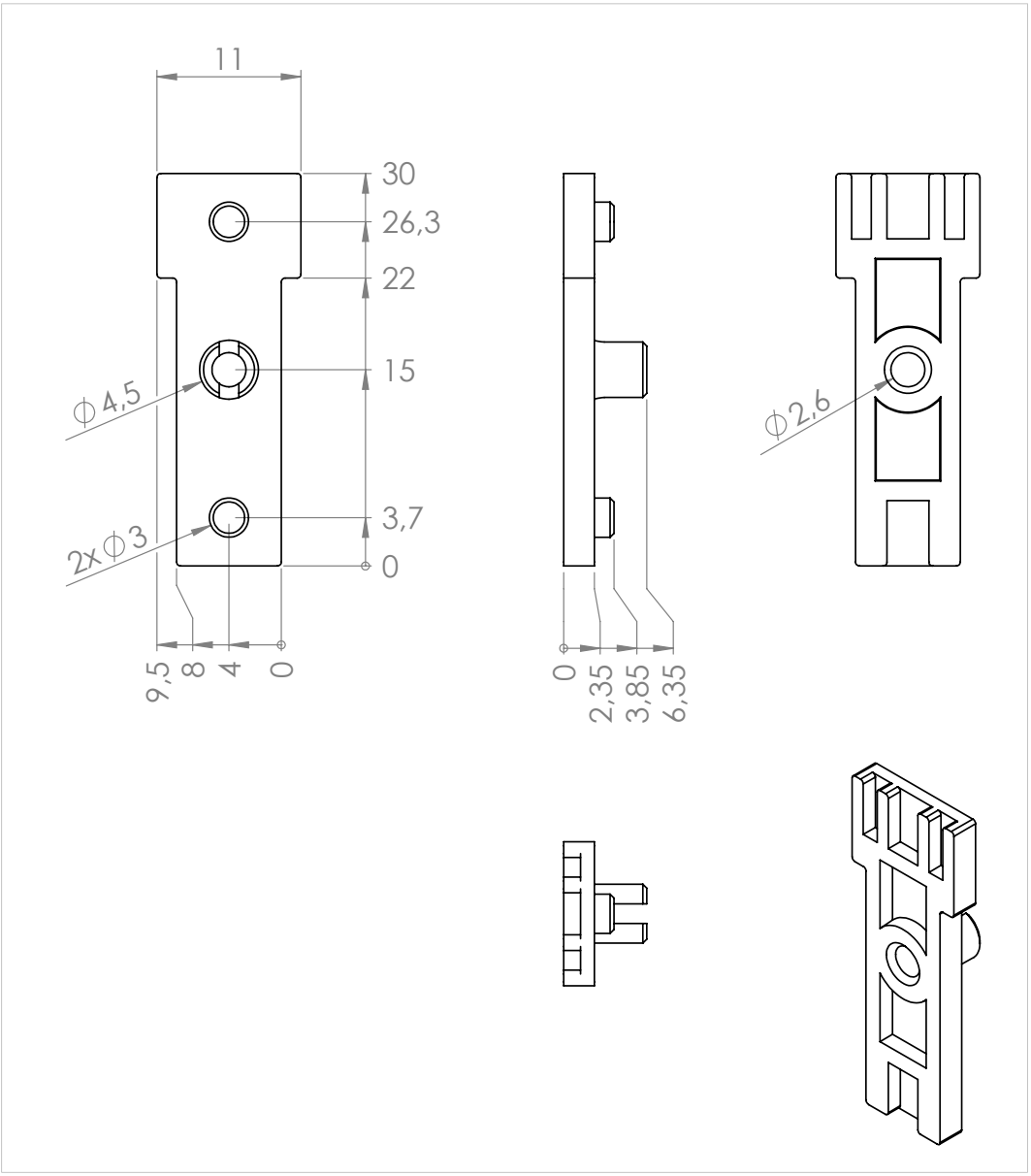

Fig. 20

Top Part

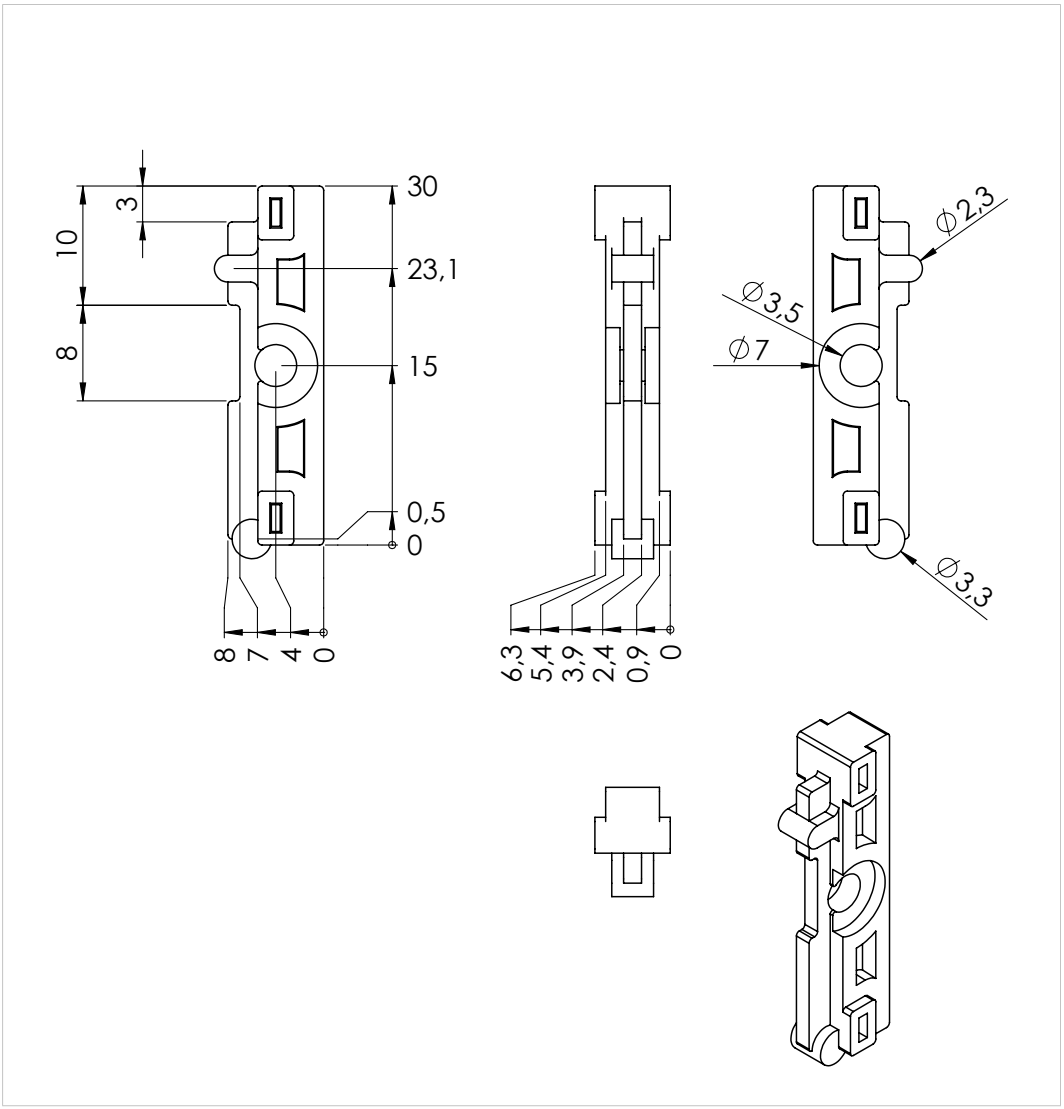

Fig. 21

Fastening Screw

Recommended screw tightening torque is 0.3 Nm.

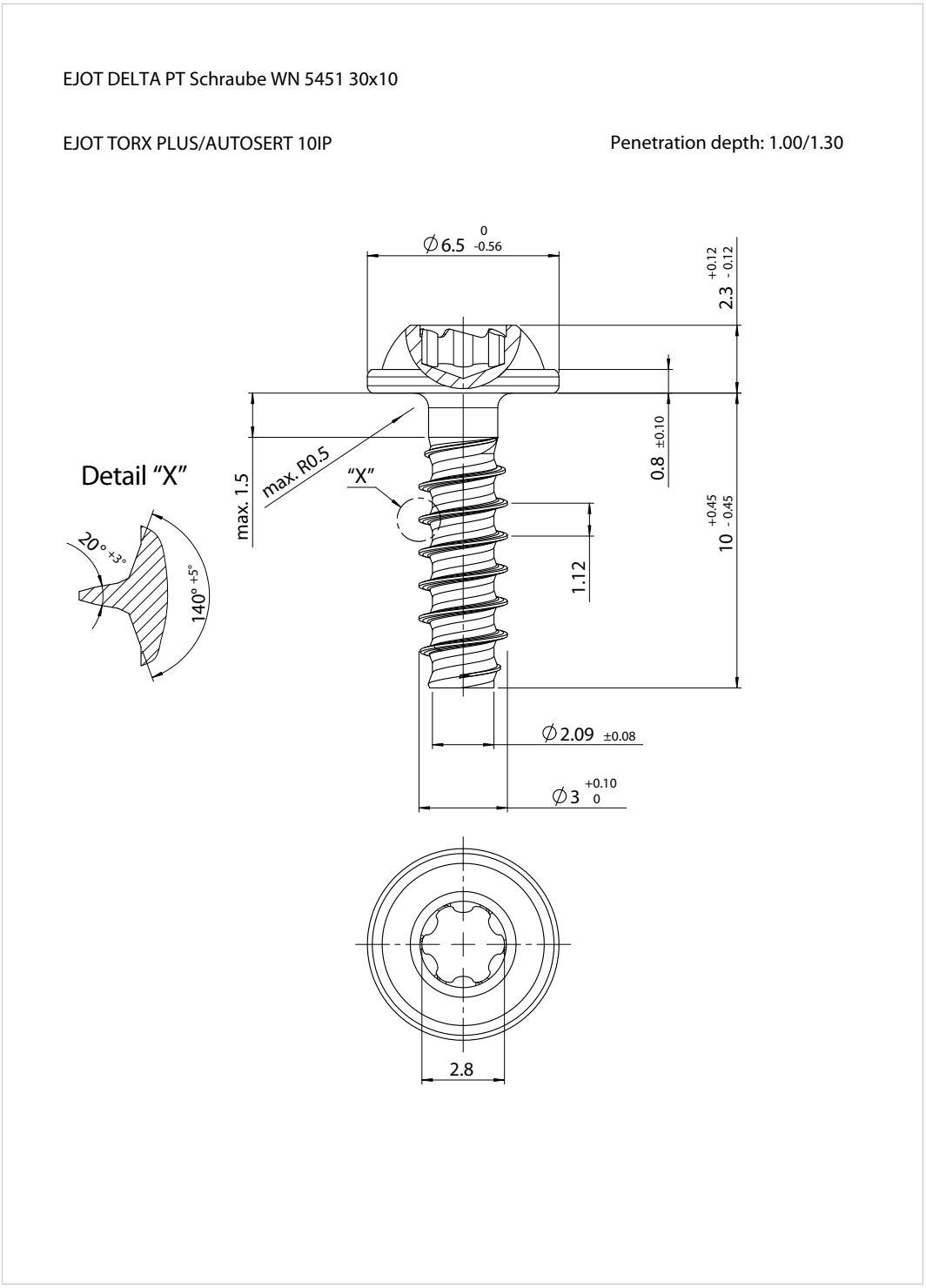

Fig. 22

B Technical Specification

The properties specified in this chapter applies to all Anybus CompactCom bricks unless otherwise stated. Any deviations from what is stated in this chapter is specified separately in each network appendix.

B.1 Environmental

B.1.1 Operating Temperature

Active mdules:	-40 to 85°C (-40 to 185°F)
Passive modules:	-40 to 85°C (-40 to 185°F)

B.1.2 Storage Temperature

Active modules:	-40 to 85°C (-40 to 185°F)
Passive modules:	-40 to 85°C (-40 to 185°F)

B.1.3 Humidity

Active modules:	5 to 95% non-condensing
Passive modules:	5 to 95% non-condensing

B.2 Shock and Vibration

- Shock test, operating IEC 68-2-27 half-sine 30g, 11 ms, 3 positive and 3 negative shocks in each of three mutually perpendicular directions
- Shock test, operating IEC 68-2-27 half-sine 50g, 11 ms, 3 positive and 3 negative shocks in each of three mutually perpendicular directions
- Sinusoidal vibration, operating IEC 68-2-6 10-500 Hz, 0.35 mm, 5g, 1oct/min., 10 double-sweep in each of three mutually perpendicular directions.

B.3 Electrical Characteristics

B.3.1 Operating Conditions

Symbol	Parameter	Pin Types	Conditions	Min.	Typ.	Max.	Unit
	Supply Voltage (DC)			3.15	3.30	3.45	V
V_{DD}	Ripple (AC)			-	-	± 100	mV
V_{SS}	Ground reference		-	0.00	0.00	0.00	V
			Class A	-	-	250	mA
			Class B	-	-	500	mA
I_{IN}	Current consumption	PWR	Class C	-	-	1000	mA
V_{IH}	Input High Voltage	I, BI	-	0.7 x V_{DD}	-	V_{DD} + 0.2	V
V_{IL}	Input Low Voltage			-0.2	-	0.2 x V_{DD}	V
I_{OH}	Current, Output High	O, BI	-	-40	-	40	mA
I_{OL}	Current, Output Low						
V_{OH}	Output High Voltage		I_{OH} = -4mA	2.4	-	-	V
V_{OL}	Output Low Voltage		I_{OL} = 4mA	-	-	0.4	V

I= Input, CMOS (3.3V)

O= Output, CMOS (3.3V)

BI= Bidirectional, Tristate

PWR= Power supply inputs

B.3.2 Functional Earth & Shielding

All Anybus CompactCom modules features a cable shield filter designed according to each network standard. To be able to support this, the host application *must* have a conductive area connected to functional earth as described in *Footprint, p. 24*.

HMS cannot guarantee proper EMC behavior unless this requirement is fulfilled.

B.4 Regulatory Compliance

B.4.1 EMC Compliance (CE)

Since the Anybus CompactCom B30 is considered a component for embedded applications, it cannot be CE-marked as an end product. However, the Anybus CompactCom B30 family is pre-compliance tested in a typical installation providing that all modules conforms to the EMC directive in that installation.

Once the end product has successfully passed the EMC test using any of the Anybus CompactCom B30 modules, the pre-compliance test concept allows any other interface of the same type (see Anybus CompactCom B30) in the Anybus CompactCom B30 family to be embedded in that product without further EMC tests.

To be compliant to the EMC directive 2004/108/EC, the pre-compliance testing has been conducted according to the following standards:

Emission: EN61000-6-4	EN55011 Radiated emission
	EN55011 Conducted emission
Immunity: EN61000-6-2	EN61000-4-2 Electrostatic discharge
	EN61000-4-3 Radiated immunity
	EN61000-4-4 Fast transients/burst
	EN61000-4-5 Surge immunity
	EN61000-4-6 Conducted immunity

Since all Anybus CompactCom B30 modules have been evaluated according to the EMC directive through the above standards, this serve as a base for our customers when certifying Anybus CompactCom B30 based products.

C Implementation Guidelines

C.1 Additional Address Lines (A[11...13])

At the time of writing, address lines 11-13 are unused. Future products may however utilize these extra address lines to accommodate a larger amount of high speed network I/O. To be able to take advantage of this future functionality, it is recommended to implement as many of the address lines as possible.

Unused address lines must be tied to VDD in order to maintain software compatibility and keep the memory map intact, see table below. If a Safety Module is connected, A12 and A13 must not be tied to VDD, though.

Available Address Lines	Recommendation
11	Implement A[0...10]. Tie A[11...13] to VDD
12	Implement A[0...11]. Tie A[12...13] to VDD
13	Implement A[0...12]. Tie A[13] to VDD
14	Implement A[0...13]

C.2 Network Status LED outputs (LED[1A...2B])

C.2.1 General

The LED[1A....2B] outputs can be used to relay the network status LEDs to elsewhere on the host application.

Note that it is the responsibility of the host application to ensure that each LED output is connected to a LED of the correct color (on active modules, it is possible to retrieve this information from the Anybus Object (01h); consult the general Anybus CompactCom 30 Software Design Guide for more information).

Network	LED1A	LED1B	LED2A	LED2B
Standard configuration (PROFIBUS, DeviceNet, EtherCAT, EtherNet/IP, Modbus-TCP, PROFINET.)	Green	Red	Green	Red

C.2.2 Buffering

The outputs are unbuffered, and cannot drive LEDs directly. In this example, a LED is connected to one of the LED outputs of the Anybus module via an NPN transistor.

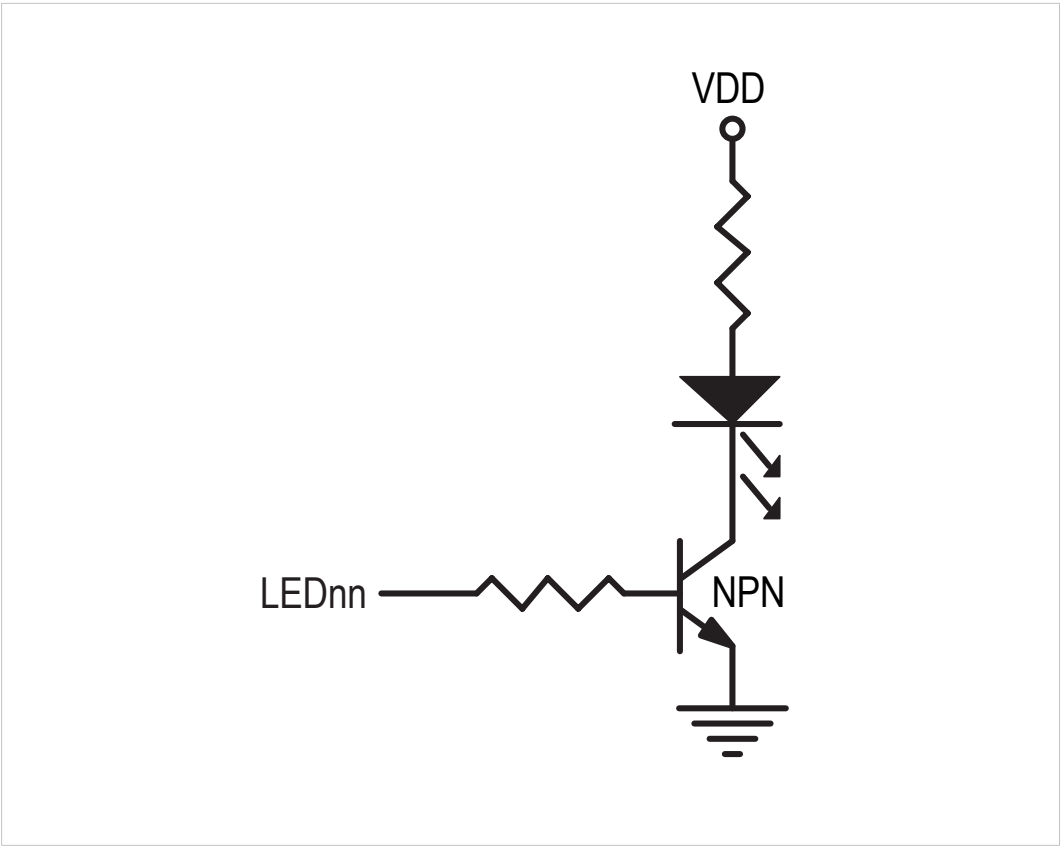

Fig. 23

The LED[1A....2B] outputs can, together with the General Purpose IO signals, for some networks be used for extended LED functionality. Please consult the network appendices for more information.

C.3 Typical Implementation (3.3 V)

The example in the figure below shows a typical implementation with both parallel- and serial communications.

Note that to increase readability, certain signals have intentionally been left out from this example.

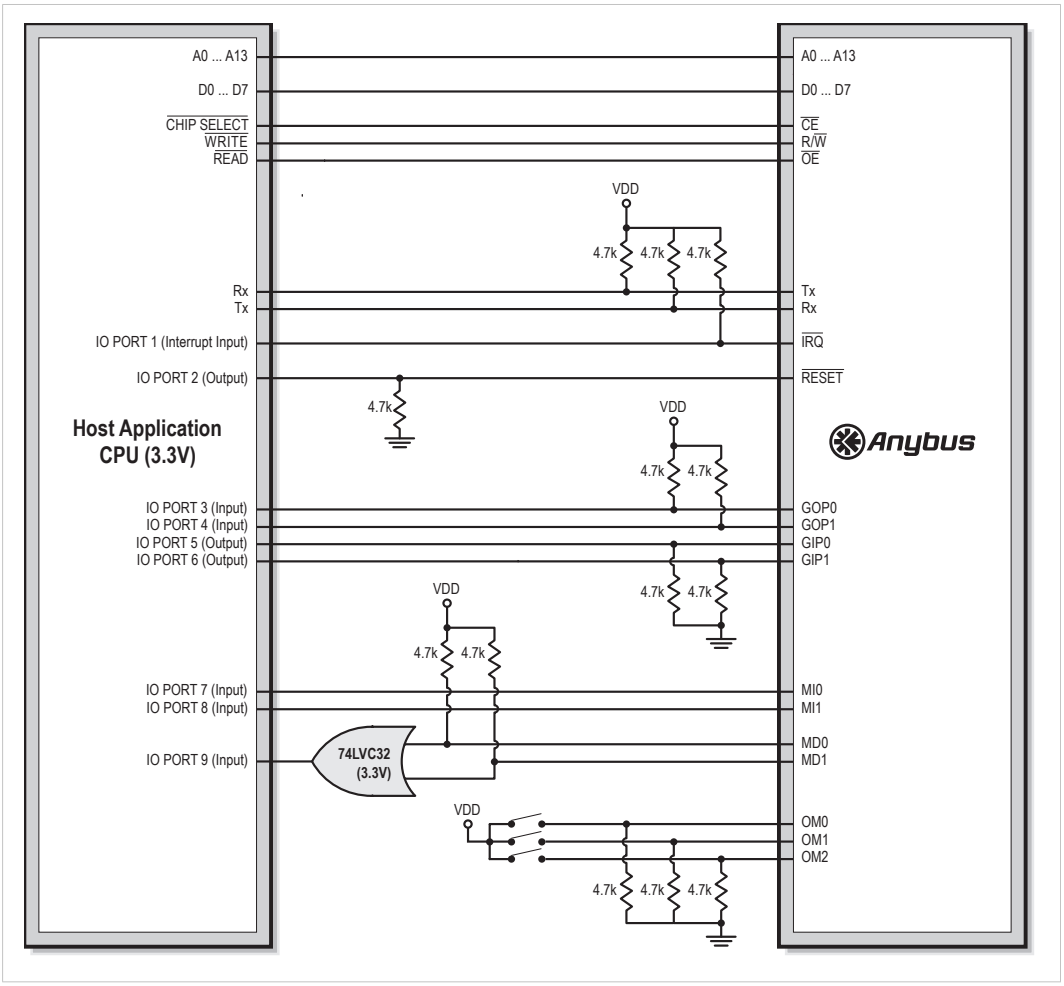

Fig. 24

As with many common microcontrollers, the direction of the IO PORT pins on the CPU in this example is determined during power up; hence the pullup/pulldown resistors on the signals marked "IO PORT (OUTPUT) n".

C.4 Interfacing to 5V Logic

The Anybus CompactCom is not 5 V tolerant. This means that a level shifting circuit of some sort is required when interfacing the module in systems based on 5 V logic. To better understand the issues involved when designing mixed voltage systems, it is recommended to read “Low-Cost, Low-Power Level Shifting in Mixed-Voltage (5 V, 3.3 V)” Systems (Publication: SCBA002A) by Texas Instruments.

The example in the figure below uses four 74LVC245 bus transceivers powered with 3.3 V to buffer the signals towards the Anybus CompactCom B30. The CHIPSELECT and READ signals from the host application CPU are fed into a 74LVC32 logical OR gate (also powered by 3.3 V) of which the output is used to control the direction of the bus transceiver that buffers the data bus.

Note that to increase readability, certain signals have intentionally been left out from this example.

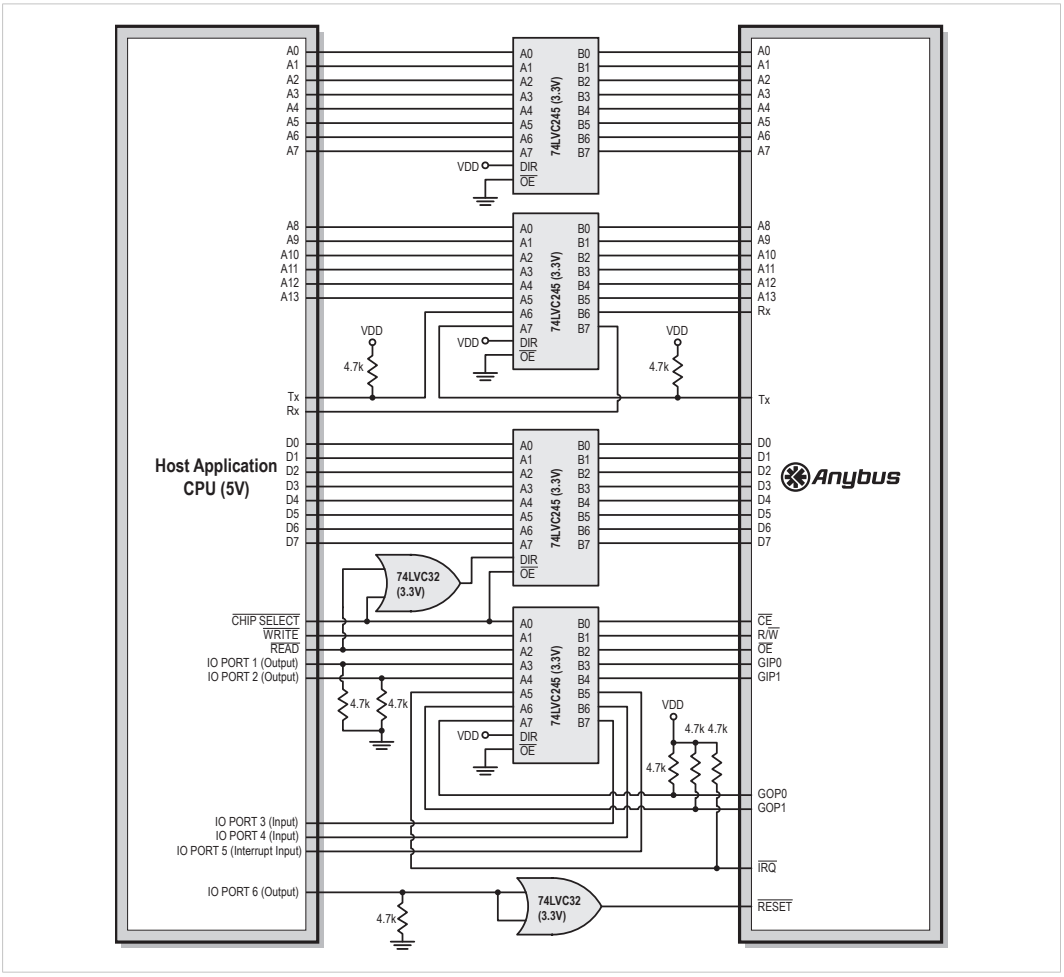

Fig. 25

As with many common microcontrollers, the direction of the IO PORT pins on the CPU in this example is determined during power up; hence the pullup/pulldown resistors on the signals marked “IO PORT (OUTPUT) n”.

C.5 Power Supply Considerations

C.5.1 General

The Anybus CompactCom platform in itself is designed to be extremely power efficient. The exact power requirements for a particular networking systems will however vary a lot depending on to the components used in the actual bus circuitry.

While some systems usually require less than 250 mA of supply current, some high performance networks, or networks which require the use of legacy ASIC technology, will consume up to 500 mA, or in rare cases even as much as 1000 mA.

As an aid when designing the power supply electronics, the networks have been divided into classes based on their power consumption as follows.

- Class A

  This class includes systems which consume less than 250 mA of supply current.

- Class B

  This class includes systems which consume up to 500 mA of supply current.

- Class C

  This class includes systems which consume up to 1000 mA of supply current.

  The following table lists the currently supported networking systems and their corresponding class.

Network	Class A	Class B	Class C
DeviceNet	Yes	Yes	Yes
PROFIBUS			
EtherNet/IP			
PROFINET			
Modbus-TCP			
EtherCAT	No		
Profinet 2-Port			
Ethernet/IP 2-Port			
Modbus-TCP 2-Port			

A power supply designed to fulfill Class A requirements (250 mA), will be able to support all networks belonging to class A, but none of the networks in Class B and C.

A power supply designed to fulfill Class C requirements, will be able to support all networks.

C.6 Bypass Capacitance

The power supply inputs must have adequate bypass capacitance for high-frequency noise suppression. It is therefore recommended to add extra bulk capacitors near the power supply inputs:

Reference	Value (Ceramic)
C1	22 µF / 6.3 V
C2	100 nF / 16 V

An example is shown in the picture below.

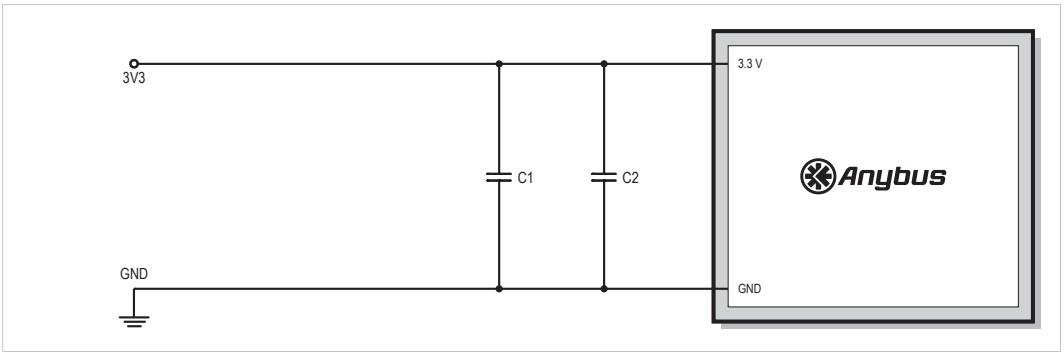

Fig. 26

C.7 3.3 V Regulation

The following example uses the LT1767 from Linear Technology to provide a stable 3.3 V power source for the module. Note that all capacitors in this example are of ceramic type.

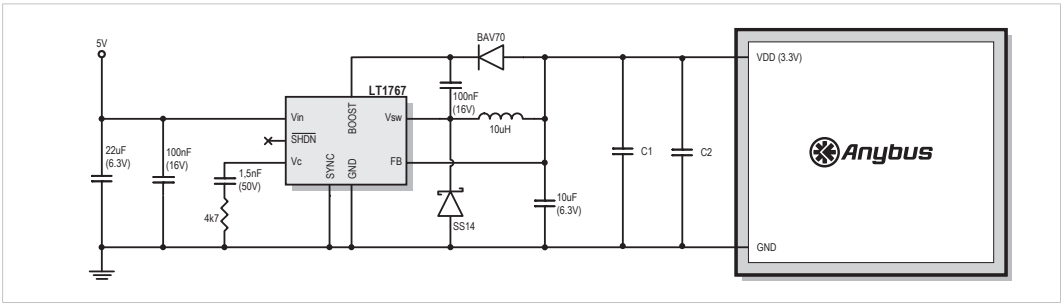

Fig. 27

For detailed information regarding this example, consult the data sheet for the LT1767 (Linear Technology).

D B30 Connector/Socket

The brick is connected to the carrier board using a connector/socket and a through hole terminal strip. The through hole terminal strip is included in the package, but the connector/socket has to be ordered separately. It is recommended to use the same connector/socket on the carrier board, as is mounted on the brick .

Manufacturer	Samtec Part No.	HMS Order No.
Samtec www.samtec.com	ASP168929-03	RS1012

Smaller quantities (packages of 125 pcs) can be ordered from HMS, but larger quantities (500 pcs and more) should be ordered from Samtec directly. When ordering, please mention that it is intended for indesign with an HMS product.

www.samtec.com

The product sheet for the connector/socket is included at the end of this appendix.

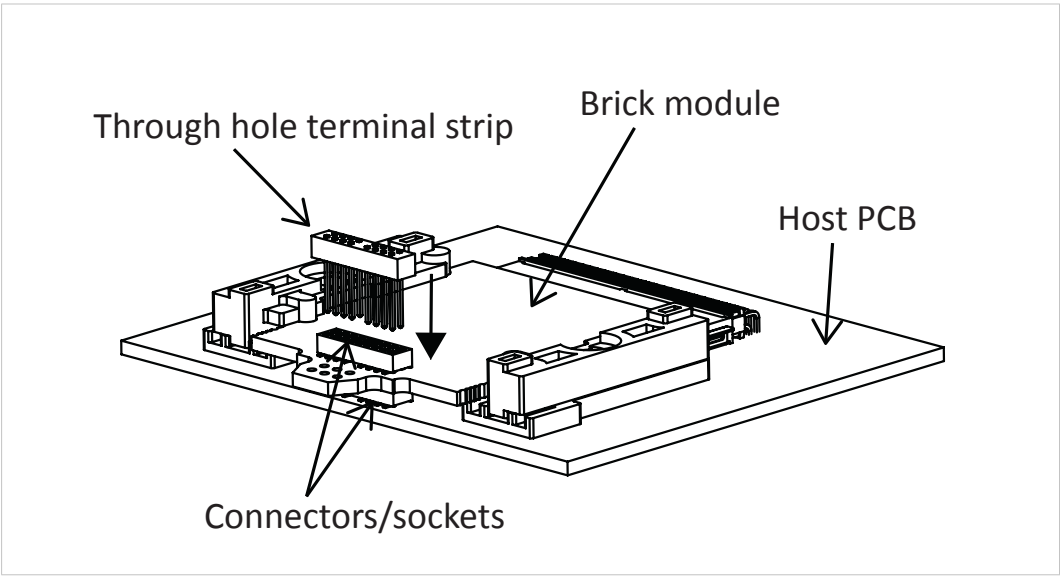

Fig. 28

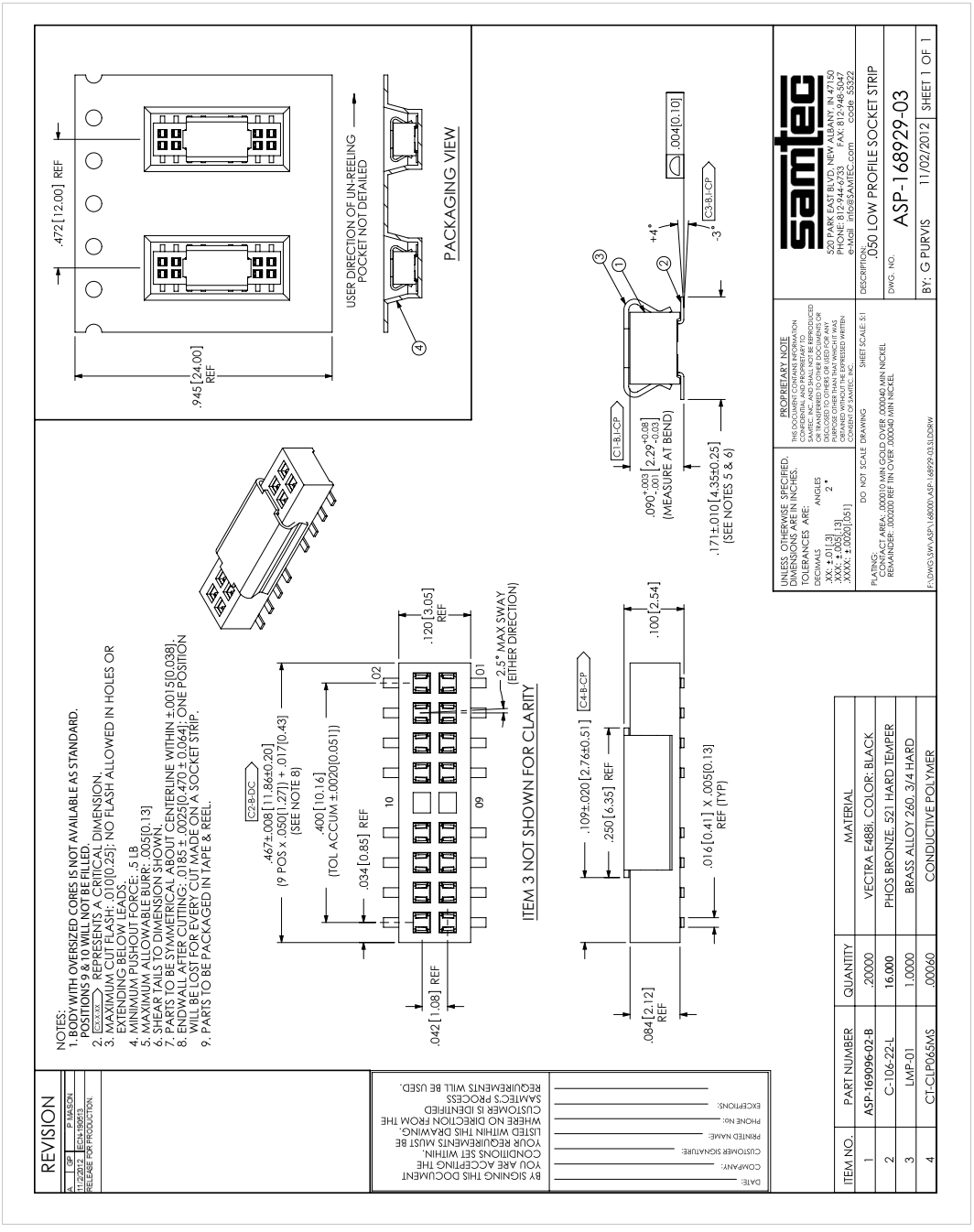
PACKAGING VIEW
USER DIRECTION OF UN-REELING POCKET NOT DETAILED
.472 [12.00] REF
.945 [24.00] REF
ITEM 3 NOT SHOWN FOR CLARITY
.467±.008 [11.86±0.20] (9 POS x .050[1.27]) + .017[0.43] (SEE NOTE 8)
.400 [10.16] (TOL ACCUM ±.0020[0.051])
.034 [0.85] REF
.120 [3.05] REF
.042 [1.08] REF
2.5° MAX SWAY (EITHER DIRECTION)
.109±.020 [2.76±0.51]
.250 [6.35] REF
.100 [2.54]
.016 [0.41] X .005[0.13] REF (TYP)
.084 [2.12] REF
.090 +.003 -.001 [2.29 +0.08 -0.03] (MEASURE AT BEND)
.171±.010 [4.35±0.25] (SEE NOTES 5 & 6)
.004[0.10]
C1-B,I-CP
C2-B-DC
C3-B,I-CP
C4-B-CP
NOTES:
1. BODY WITH OVERSIZED CORES IS NOT AVAILABLE AS STANDARD.
2. POSITIONS 9 & 10 WILL NOT BE FILLED.
3. MAXIMUM CUT FLASH: .010[0.25]; NO FLASH ALLOWED IN HOLES OR EXTENDING BELOW LEADS.
4. MINIMUM PUSHOUT FORCE: .5 LB
5. MAXIMUM ALLOWABLE BURR: .005[0.13]
6. SHEAR TAILS TO DIMENSION SHOWN.
7. PARTS TO BE SYMMETRICAL ABOUT CENTERLINE WITHIN ±.0015[0.038].
8. ENDWALL AFTER CUTTING: .0185 ± .0025[0.470 ± 0.064]; ONE POSITION WILL BE LOST FOR EVERY CUT MADE ON A SOCKET STRIP.
9. PARTS TO BE PACKAGED IN TAPE & REEL.
REVISION
A GP P MASON
11/2/2012 ECN-190613
RELEASE FOR PRODUCTION.
BY SIGNING THIS DOCUMENT YOU ARE ACCEPTING THE CONDITIONS SET WITHIN. YOUR REQUIREMENTS MUST BE LISTED WITHIN THIS DRAWING. WHERE NO DIRECTION FROM THE CUSTOMER IS IDENTIFIED SAMTEC'S PROCESS REQUIREMENTS WILL BE USED.
DATE:
COMPANY:
CUSTOMER SIGNATURE:
PRINTED NAME:
PHONE No:
EXCEPTIONS:
ITEM NO. | PART NUMBER | QUANTITY | MATERIAL
1 | ASP-169096-02-B | .20000 | VECTRA E488i, COLOR: BLACK
2 | C-106-22-L | 16.000 | PHOS BRONZE, 521 HARD TEMPER
3 | LMP-01 | 1.0000 | BRASS ALLOY 260, 3/4 HARD
4 | CT-CLP065MS | .00060 | CONDUCTIVE POLYMER
UNLESS OTHERWISE SPECIFIED, DIMENSIONS ARE IN INCHES.
TOLERANCES ARE:
DECIMALS ANGLES
.XX: ±.01[.3] 2°
.XXX: ±.005[.13]
.XXXX: ±.0020[.051]
PROPRIETARY NOTE
THIS DOCUMENT CONTAINS INFORMATION CONFIDENTIAL AND PROPRIETARY TO SAMTEC, INC. AND SHALL NOT BE REPRODUCED OR TRANSFERRED TO OTHER DOCUMENTS OR DISCLOSED TO OTHERS OR USED FOR ANY PURPOSE OTHER THAN THAT WHICH IT WAS OBTAINED WITHOUT THE EXPRESSED WRITTEN CONSENT OF SAMTEC, INC.
DO NOT SCALE DRAWING
SHEET SCALE: 5:1
PLATING:
CONTACT AREA: .000010 MIN GOLD OVER .000040 MIN NICKEL
REMAINDER: .000200 REF TIN OVER .000040 MIN NICKEL
F:\DWG\SW\ASP\168000\ASP-168929-03.SLDDRW
samtec
520 PARK EAST BLVD, NEW ALBANY, IN 47150
PHONE: 812-944-6733 FAX: 812-948-5047
e-Mail info@SAMTEC.com code 55322
DESCRIPTION: .050 LOW PROFILE SOCKET STRIP
DWG. NO. ASP-168929-03
BY: G PURVIS 11/02/2012 SHEET 1 OF 1

Fig. 29

This page intentionally left blank

© 2019 HMS Industrial Networks
Box 4126
300 04 Halmstad, Sweden

info@hms.se