PORTABLE REFRIGERATED AIR CONDITIONER

USER MANUAL

For

NOBOCOOL Mega **NC-49DP/C**

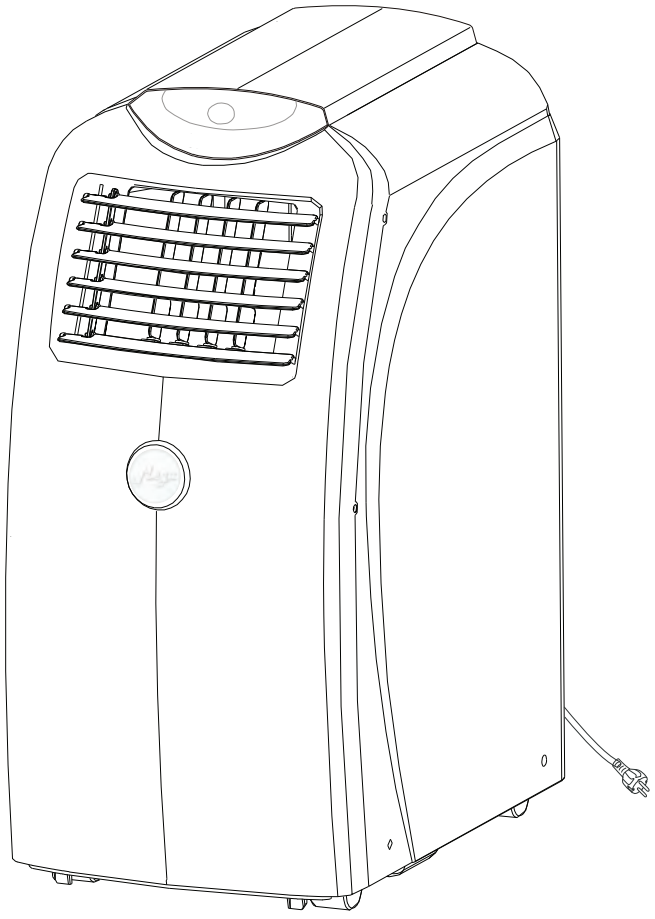

Thank you for selecting our quality air conditioner. Please be sure to read this user manual carefully before using. Any enquiries should be directed to NOBO on 1800 my nobo or 1800 69 6626 in the first instance.

NOBO
17 Brett Drive, Carrum Downs VIC 3201
Tel: (03) 9775 1022, Fax: (03) 9775 1400
www.nobo.com.au

Important Issues Regarding the Proper Use of this Air Conditioner

Please contact NOBO on 1800 my nobo or 1800 69 6626 for advice before returning unit to the place of purchase.

Use this air conditioner only as described in this instruction manual.

- This appliance is fitted with a special safety device. When the compressor switches off or when the appliance is first turned on, this device prevents the compressor from switching on again for at least three minutes.
- This air conditioner has been designed and manufactured to operate in a domestic situation only and should not be used for other purposes.
- The appliance is not intended for use by young children or infirm persons unless they have been adequately supervised by a responsible person to ensure they can use the appliance safely. Young children should be supervised to ensure that they do not play with the appliance.
- Never use the air conditioner in damp rooms (eg bathrooms and laundries)
- If the power cord is damaged, it must be replaced with a new cord installed by a suitably qualified person or NOBO serviceman.
- This air conditioner is designed to be connected to a standard 10 amp power supply outlet.
- Do not pull on or place strain on the power cord when using the appliance.
- Do not operate or stop the appliance by inserting or pulling out the power plug. Use the on/off switch on the air conditioner control panel or the remote control.
- Due to potential safety hazards, do not use an extension cord or share the power supply outlet with other appliances. Do not connect to multiple power outlets on extension leads.
- Do not rest hot or heavy objects on the appliance.
- Always unplug the unit from the power outlet before cleaning or maintenance operations, for example filter cleaning.
- Do not place the air conditioner or plastic window slider in direct sunlight.
- For maximum cooling efficiency keep the exhaust hose as short and as free of bends as possible.
- Clean the filters at least once every two weeks.
- Do not splash the unit with water.
- Do not move the unit by pulling the exhaust hose attached to the back of the unit.
- Do not move air conditioner when it is operating.
- Do not use the unit with the air intake and outlet grills closed, covered or obstructed.
- Before transporting the air conditioner, drain the water pan in accordance with the instructions on page 14. After transportation, wait at least one hour before switching the unit on.
- The unit should be transported in a vertical position. If this is not possible, secure the unit at an angle, do not lay it horizontally.
- Do not operate the air conditioner outdoors or in areas open to the outdoors.
- If the air conditioner is only being used as a spot cooler (simply to put cool air directly on a person or thing), do not connect the rear exhaust outlet.
- If the compressor runs without cool air coming out of the top air outlet after 10 minutes of correct operation, switch off the unit and contact NOBO immediately.
- When the compressor is running, hot air should always be expelled from the bottom rear outlet. If it is not, switch off and contact NOBO immediately.
- At high temperatures to protect the unit from overheating the compressor may stop. Air will flow out of the front air outlet but it will not be cooled. In this event, switch off the appliance for approximately one hour to enable the thermal cut out to self reset. The unit may then be operated in the normal manner.

THIS PRODUCT IS FOR HOUSEHOLD USE ONLY

RETAIN THIS MANUAL FOR FUTURE REFERENCE

CONTENTS

Introduction 3

Installation 6

Control panel 10

Operation of control panel 10

Operation of remote control 12

Water drainage methods 14

Maintenance and service 15

Trouble shooting 17

Specifications 18

INTRODUCTION

This portable air conditioner can alter the room temperature and humidity. It has multiple functions of cooling dehumidifying (drying) and fan ventilation, and can be moved from room to room and transported from building to building easily.

The air conditioner can maintain set room indoor air temperatures between 18°C and 32°C. The set room temperature is displayed on the remote control and in the control panel on the unit. This does not mean that the air conditioner will necessarily reduce the actual room temperature to the set room temperature.

1 HOW YOUR **NOBOCOOL** MEGA PORTABLE REFRIGERATED AIR CONDITIONER WORKS

Air from the room is drawn into the air conditioner, cooled by refrigeration, and blown into the room through the front grill.

Hot air is blown outside through the exhaust hose, using the window kit supplied with the air conditioner.

Hot air must be exhausted outside the room being cooled, or you will not cool the room.

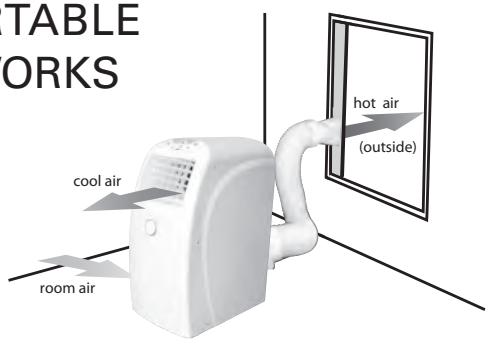

2 VARIABLES INFLUENCING THE COOLING EFFECTIVENESS OF THIS AIR CONDITIONER

The ability of the air conditioner to cool the air in your room depends on a number of variables. The critical variables are:

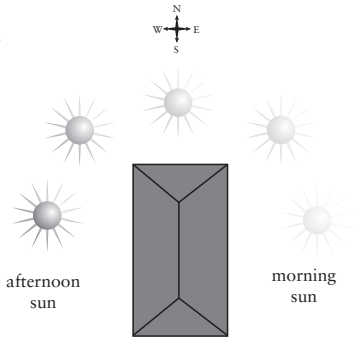

1. Orientation of the room to the sun.

Rooms facing North and West are exposed to the midday and afternoon sun, and are the hottest in the house. Rooms facing the morning sun (East), and away from the sun (South), are the coolest in the house.

2. Insulation

Insulated roofs and walls reduce the amount of heat entering the room. Windows admit heat into the room. This heat can be reduced if the windows are protected from the direct sun (eg by outside blinds, well lined inside curtains, pergolas, thick foliage etc).

3. Air Draughts

Rooms protected from draughts are more easily cooled. Windows and doors must be kept closed.

4. Multi Storey Buildings

In multi storey buildings, upper storey rooms are usually hotter and therefore harder to cool than ground floor rooms.

3 SIZING GUIDE

In general, the higher the cooling capacity (BTU/kW) of an air conditioner, the bigger the room it will cool.

This 17,000 BTU air conditioner, subject to the variables explained in box 2, can effectively cool rooms with a floor area of between 16 and 36 square metres.

Example 1:

Uninsulated upper storey room with one West facing external wall.

In this example, the air conditioner is suitable for effectively cooling a room of up to 16 square metres.

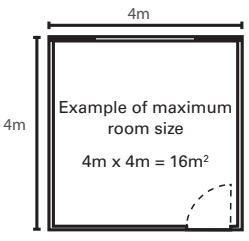

Example 2:

Insulated ground floor room with external walls facing East and/or South.

In this example, the air conditioner is suitable for effectively cooling a room of up to 36 square metres.

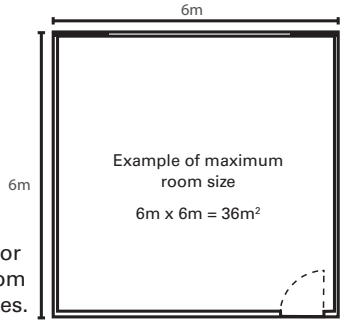

4 TIPS ON GETTING THE MOST OUT OF YOUR **NOBOCOOL** MEGA PORTABLE AIR CONDITIONER

Portable air conditioners are not designed to cool large open spaces.
To maximise the cooling effectiveness in an enclosed room:

- Turn the air conditioner on early in the day before the room heats up. It is more efficient for the air conditioner to maintain the room at a comfortable temperature than it is to reduce an already hot room to a comfortable level.
- Close all doors, windows, curtains and external blinds of the room being cooled.
- Seal or block major draughts.

GUIDELINES FOR OPTIMISING COOLING EFFECTIVENESS

NOBOCOOL portable refrigerated air conditioners have an independent Austalian tested cooling capacity of 5030 watts (5.0kW) or 17,000 BTU. This is sufficient to cool rooms up to a maximum of 36 square metres in floor area.

- Do not place the air conditioner or plastic window slider in direct sunlight. Close all curtains in the room being cooled.
- For maximum cooling (**COOLING MODE**), set the temperature at 18°C and the fan at **HIGH**. After approximately 3 minutes, the compressor will turn on (indicated by the green LED marked  on the control panel) and cooled air will come out of the air outlet. Cooled air will only come out of the air outlet when the LED on the control panel is illuminated.
- In **COOLING MODE** the air conditioner will not cool unless the set temperature is below the existing room temperature.
- In **COOLING MODE** once the existing room temperature reaches the set temperature, the fan continues operating and the compressor switches on and off to maintain the set temperature within the room.
- For maximum cooling output keep the exhaust hose as short and as straight as possible. Minimise bends which can reduce the maximum cooling capacity of the air conditioner. Elevate the air conditioner if necessary.
- Make sure the air intake and outlet grills are unobstructed.
- Clean the filters at least once every two weeks.

NAME OF EACH PART AND FUNCTION

FRONT (Fig.1)

1. Control panel
2. Up/down manually adjusted air fins
3. Air outlet
4. Left/Right auto air swinging fins
5. Rolling castor
6. Cable (power cord and plug)

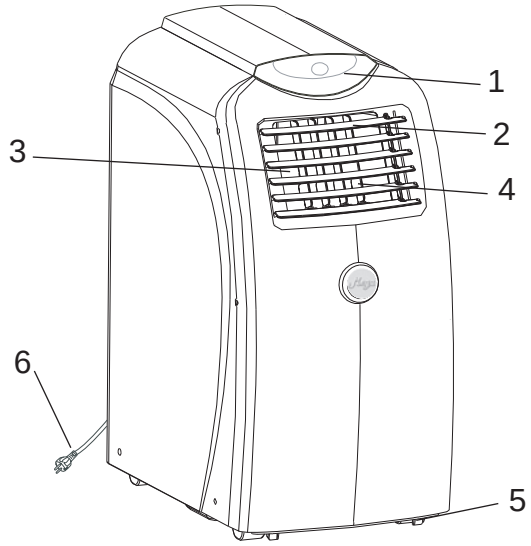

Fig.1

BACK (Fig.2)

1. Hot air outlet grill
2. Low air inlet grill
3. High air inlet grill
4. Power cord hooks
5. Water tank/chassis
6. Water tank drain outlet
7. Plug

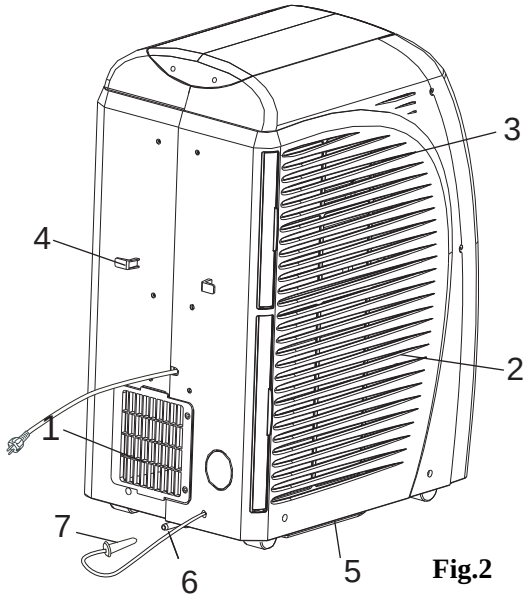

Fig.2

INSTALLATION

SELECTION OF INSTALLATION LOCATION (Fig.3)

Place the portable air conditioner in a flat location where the air inlets and outlets cannot be covered up. Place the unit no less than 50cm away from a wall or other obstacle.

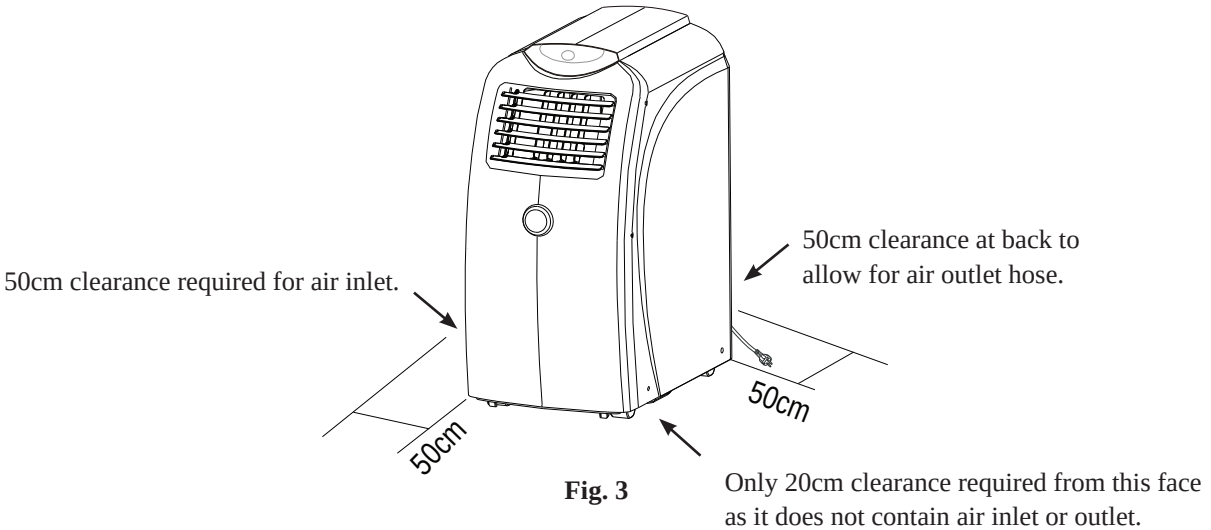

Fig. 3

INSTALLATION ACCESSORIES

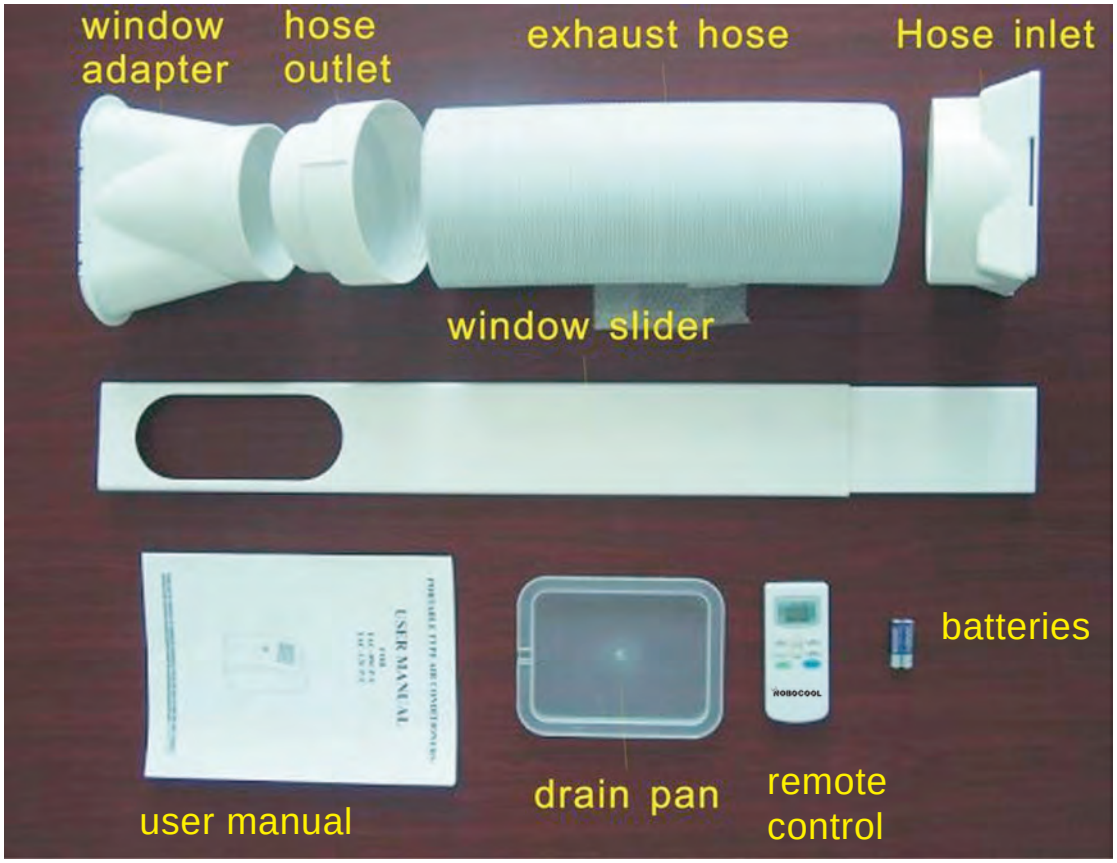

ASSEMBLY OF EXHAUST HOSE, HOSE INLET, HOSE OUTLET, WINDOW ADAPTOR AND WINDOW SLIDER (Fig.4)

- Fully extend each end of the exhaust hose by about 10cm and attach the hose inlet and hose outlet to opposite ends by rotating the inlet/outlet in a counter clockwise direction approximately 3 to 4 turns, making sure that the hose wire is well threaded into the hose inlet and outlet. The hose inlet and outlet cannot be installed unless the hose ends have been fully extended.
- Attach the window adaptor to the hose outlet by pressure fit.
- Clip the window adaptor into the window slider. Take care to not break the tabs on the window adaptor when disconnecting from the window slider.

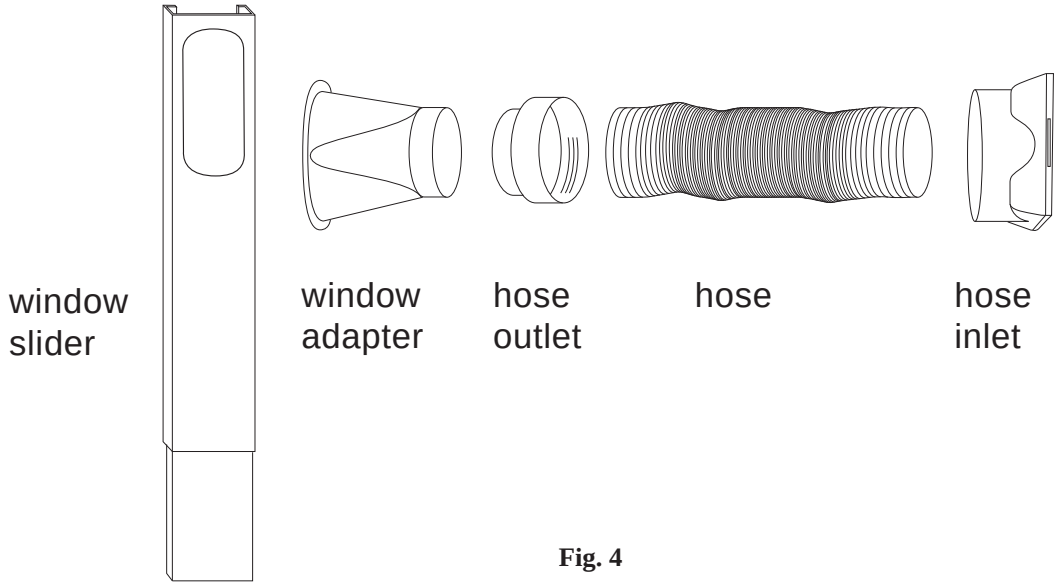

Fig. 4

MOUNTING OF ASSEMBLED AIR EXHAUST HOSE (Fig.5)

- Take care not to damage the hose inlet when attaching/detatching at the back of the Air Conditioner.
- Slide the hose inlet (square end) in the direction indicated by the arrow onto the fixing lugs on hot air outlet grill at the back of the appliance. Install carefully and do not force.
- Place the hose outlet to the nearest window. The length of the air exhaust hose is between 600mm to 1500mm; use the minimum length when working.
- When mounting, try to keep the air exhaust hose horizontal and do not extend its length by attaching it to another hose as this reduces the cooling efficiency of the appliance. If hose needs to be extended, use as few bends as possible.
- Consider elevating the unit in order to keep the hose as straight as possible.

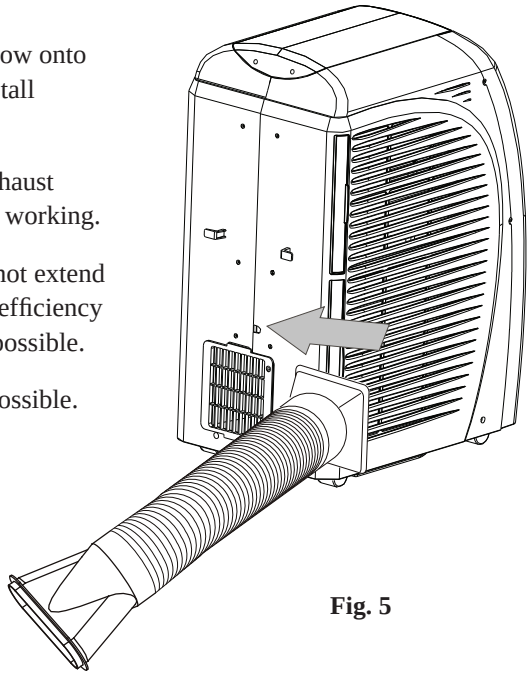

Fig. 5

ATTENTION

- The exhaust hose should be not longer than 1.5metres.
- Never bend the exhaust hose excessively when the appliance is working.
- Elevate the unit if possible to keep the exhaust hose straight.
- Always keep the exhaust hose at its shortest length and as straight as possible when the appliance is working. This will ensure maximum cooling output.
- Never move the appliance by pulling the air exhaust hose attached to the back of the appliance.
- Do not move the air conditioner when it is operating.

Correct exhaust hose mounting shown below. If mounting in the wall, the height of the hole should be 17cm~130cm. (Fig. 6)

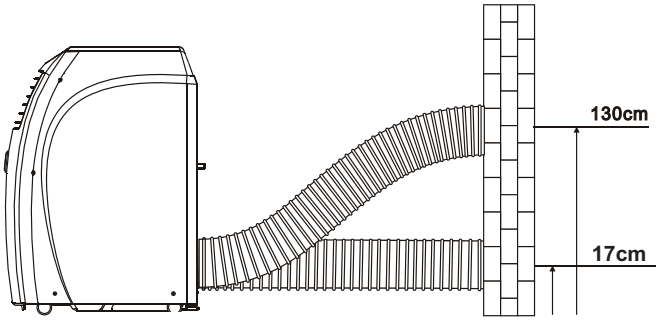

Fig. 6

If the air exhaust hose needs to be bent, the correct method is shown below. (Fig. 7)

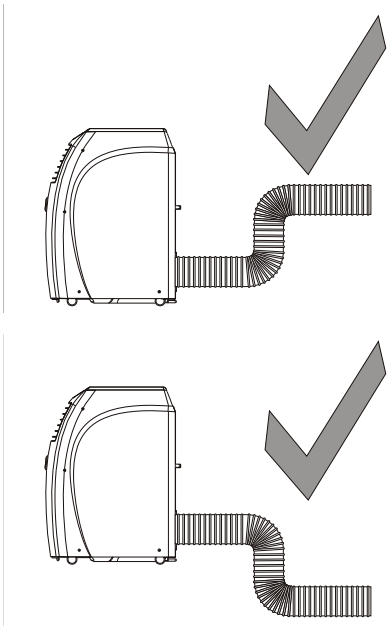

Fig. 7

Incorrect or excessive bending of the exhaust hose will cause loss of cooling and possible malfunction. (Fig. 8)

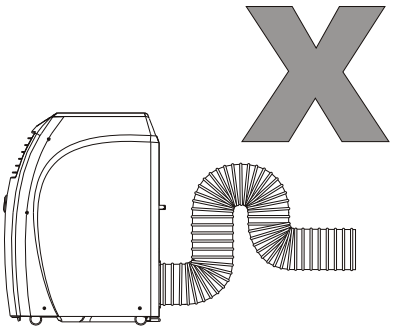

Fig. 8

WINDOW SLIDER KIT INSTALLATION (Fig. 9, Fig. 10, Fig. 11 and Fig. 12)

The window slider kit has been designed to fit most standard "vertical" and "horizontal" window applications. **It may be necessary for you to improvise/modify some aspects of the installation procedures for certain types of windows. Some window types may require the use of cardboard fillers and/or duct tape to install.**
Additional complete window kits may be purchased from NOBO to enable pre-installation in windows in other rooms.

Please refer to illustration for minimum and maximum window openings.

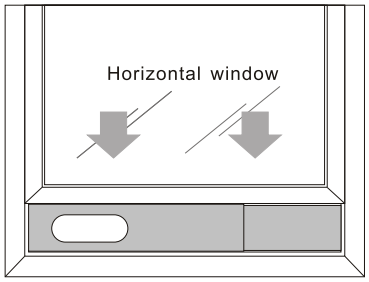

Window slider length
Min. 85cm
Max. 123cm

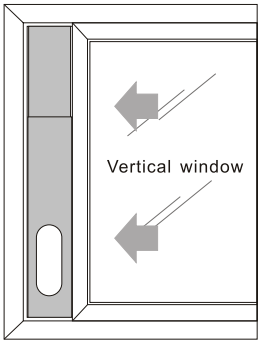

Window slider length
Min. 85cm
Max. 123cm

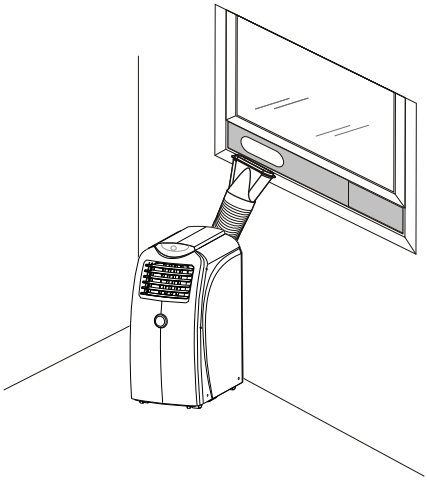

Fig. 9

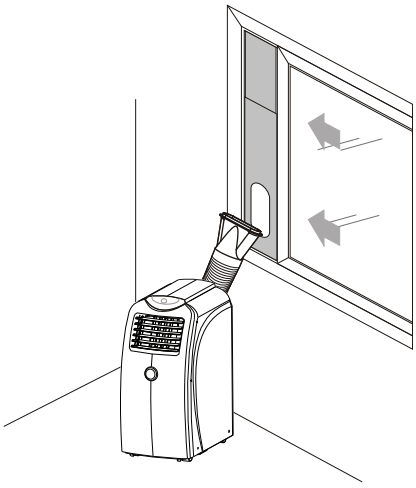

Fig. 10

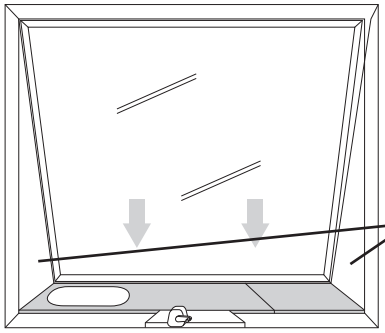

Gaps can be sealed using cardboard and duct tape.

Window slider length
Min. 85cm
Max. 123cm

Fig. 11

Standard door height 210cm.
Gap can be sealed using cardboard and duct tape.
Additional window sliders can also be purchased to fill this gap.

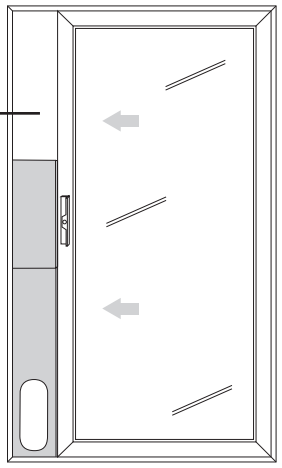

Window (Door) slider height
Max. 123cm

Fig. 12

CONTROL PANEL

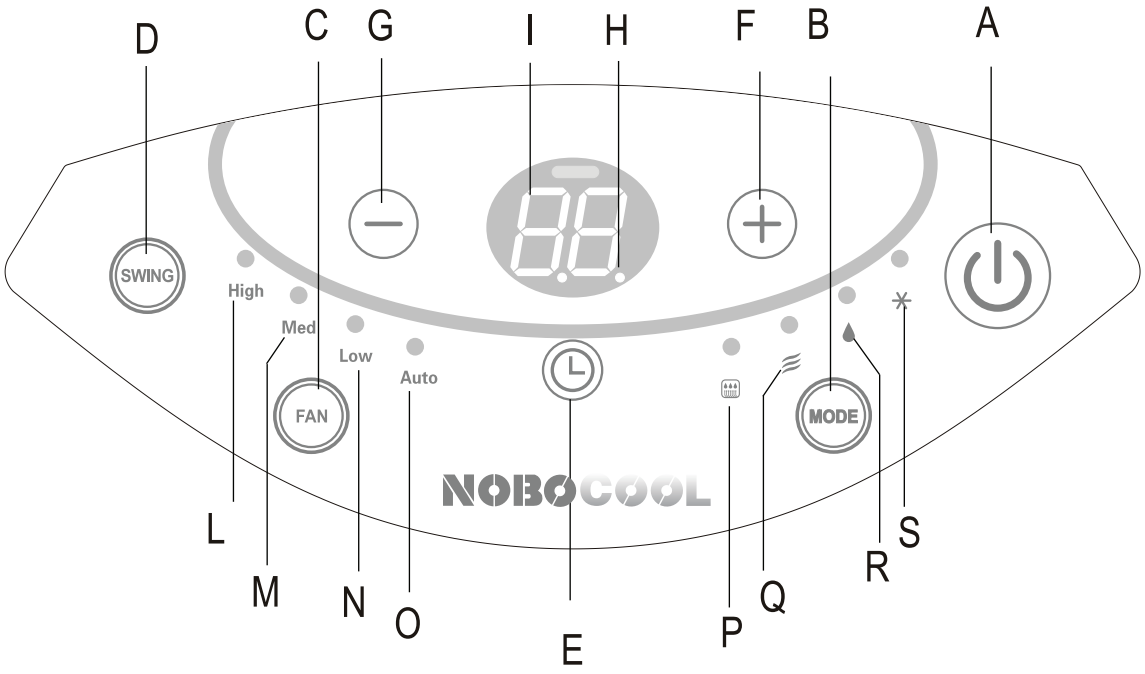

A. ON/OFF button.
B. MODE button. to select modes of cooling / dry / fan.
C. FAN SPEED button, to select fan speed of High / Med / Low / Auto.
D. SWING button, to switch on/off left/right auto swing function.
E. TIMER button.
F. INCREASE button, to increase temperature / time.
G. DECREASE button, to decrease temperature / time.
H. TIMER INDICATOR LIGHT, lights up and keeps flashing to indicate the timer is in operation.
I. LCD DISPLAY, displays set temperature or timer hours.
L / M / N / O. FAN SPEED LIGHTS of High / Med / Low / Auto.
P. COMPRESSOR OPERATING LIGHT, illuminated when compressor is operating.
Q. FAN MODE LIGHT, illuminated when in FAN mode.
R. DRY MODE LIGHT, illuminated when in DRY mode.
S. COOLING MODE LIGHT, illuminated when in COOLING mode.

OPERATION OF CONTROL PANEL

The operating temperature ranges for cooling and dehumidifying are 18°C - 32°C. A temperature within this range may be set, but the room may not necessarily reach this set temperature.

If the appliance is turned off during cooling or dry operation and turned on again immediately, the unit will wait at least 3 minutes before restarting the compressor.

POWER SUPPLY

- Do not connect the portable air conditioner to a power supply outlet which is also being used for other electrical appliances.
- Insert the power plug securely into the power supply outlet and turn power on. The air conditioner will beep after 2 seconds. Press the on/off button on the display panel (or remote) to start air conditioner.

COOLING MODE

- Press **ON/OFF** button to turn the appliance on.
- Press **MODE** button to select **COOLING** mode.
- Set the temperature with **INCREASE/DECREASE** buttons.
- To select fan speed, press **FAN SPEED** button repeatedly until the required speed is selected (High/Med/Low/Auto). Auto fan speed adjusts the fan speed automatically between **HIGH**, **MEDIUM** and **LOW** settings according to the variance between set temperature and room temperature.
- The set temperature will remain displayed in the control panel.

NB: In **COOLING** mode, the appliance automatically removes excess moisture from the atmosphere.

NB: In **COOLING** mode, the exhaust hose must be connected to allow warm air to be expelled from the room being cooled.

DRY (DEHUMIDIFYING) MODE

- Keep the windows and doors closed for an effective dehumidification.
- When used as dehumidifier only, keep the air exhaust hose **disconnected** from the back of the unit**.**
- Press **ON/OFF** button to turn the appliance on.
- Press **MODE** button to select DRY mode, the fan speed will always be at Auto and can not be adjusted in DRY mode and the control panel will display “dh”.
- Compressor light will be permanently illuminated in this mode after approximately 3 minutes.

FAN MODE

- Press **ON/OFF** button to turn the appliance on
- Press **MODE** button to select FAN mode.
- To select fan speed, press **FAN SPEED** button repeatedly until the required speed is selected (**HIGH, MED, LOW**). The fan speed AUTO can not be selected in FAN mode.

NB: In **FAN** mode, the exhaust hose does not need to be connected.

SETTING THE TIMER

This timer can be used to delay the appliance start up or shutdown. This avoids wasting electricity by optimizing operating periods.

PROGRAMMED SHUTDOWN

- With the appliance on, press **TIMER** button, the time remaining until shutdown is displayed on LCD.
- Set the time when you want the appliance to switch off with INCREASE and DECREASE buttons (from 30 minutes to 24 hours).
- During the first ten hours you can select half hour intervals. For times longer than ten hours, one hour intervals can be selected.
- Press **TIMER** button again to confirm the timer setting, the TIMER INDICATOR LIGHT lights up and keeps flashing to indicate the timer is activated.
- At the end of the set time the appliance switches off automatically.
- To cancel the TIMER setting, press **TIMER** button again.

PROGRAMMED STARTUP

- Turn on the Appliance and select the required mode, for example, COOLING 25° C, fan speed HIGH.
- Press **ON/OFF** button to switch into STANDBY.
- Press **TIMER** button, the time is displayed on LCD display.
- Set the time remaining until startup with INCREASE and DECREASE buttons, (from 30 minutes to 24 hours).
- During the first ten hours you can select half hour intervals. For times longer than ten hours one hour intervals can be selected.
- Press **TIMER** button again to confirm the timer setting, the TIMER INDICATOR LIGHT lights up and keeps flashing to indicate the timer is activated. The time remaining (in hours) will also be shown on LCD display.
- At the end of the set time the appliance switches on automatically and operates in the selected mode, for example COOLING 25°C, fan speed HIGH.
- To cancel the TIMER setting, press the ” **TIMER** ” button again.

OPERATION OF REMOTE CONTROL

THE REMOTE CONTROL

INSERTING THE BATTERIES

- Slide and remove the protective cover (see Fig 13).
- Insert two new batteries (not rechargeable) and make sure the (+) and (-) are in the correct position.
- Replace the cover.

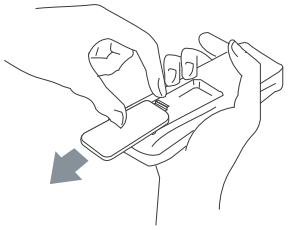

Fig. 13

If the remote control is not used for long periods, remove the batteries.

CORRECT USE

- Point the remote control towards the front of the air conditioner. (see Fig 14)
- Maximum distance: approximately 7 metres (without any obstacles between the remote control and the receiver).
- Do not drop remote control, expose it to direct sunlight or leave it near sources of heat.

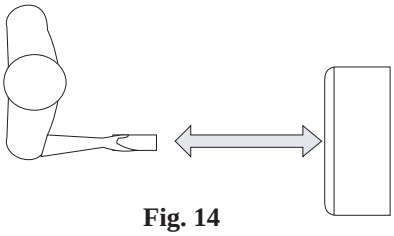

Fig. 14

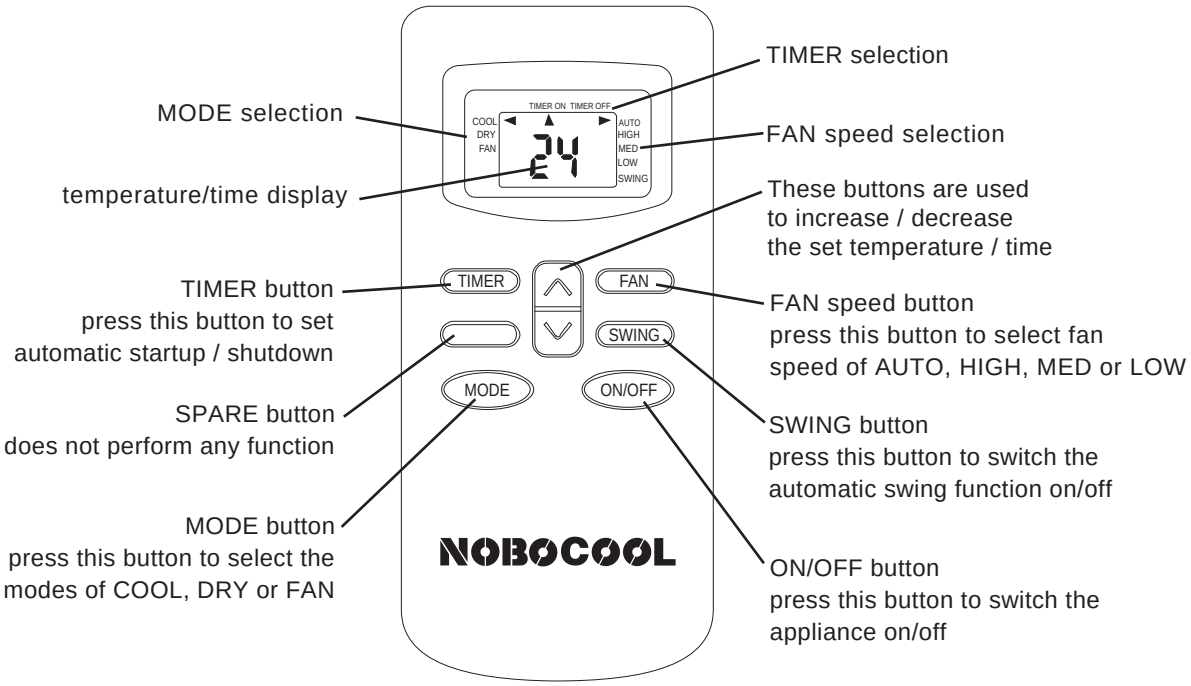

Fig. 15

COOLING MODE (Fig. 16)

- Press the " **ON /OFF**" button to turn the appliance on.
- Press the "**MODE**" button to select **COOL.**
- Set the temperature using the "▲▼" button.
- To select fan speed, press the "**FAN**" button repeatedly until the required speed is selected (HIGH, MED, LOW, AUTO).

NB: In **COOLING** mode, the appliance automatically removes excess moisture from the atmosphere.

NB: In **COOLING** mode, the exhaust hose must be connected to allow warm air to be expelled from the room being cooled.

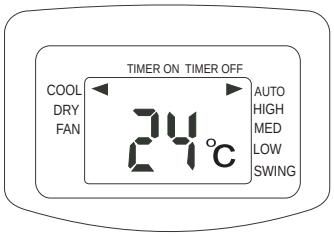

Fig. 16

DRY (DEHUMIDIFYING) MODE (Fig. 17)

- When used as dehumidifier only, keep the air exhaust hose **disconnected.**
- Press the "**ON /OFF**" button to turn the appliance on.
- Press the " **MODE** " button to select **DRY**, the fan speed will always be at **AUTO** and cannot be adjusted in **DRY** mode.

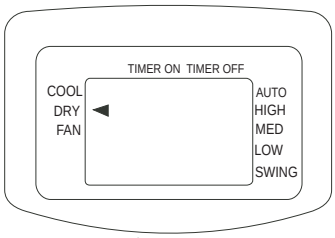

Fig. 17

FAN MODE (Fig. 18)

- Press the "**ON /OFF**" button to turn the appliance on
- Press the "**MODE**" button to select **FAN** .
- To select fan speed, press the "**FAN**" button repeatedly until the required speed is selected (**HIGH, MED, LOW**). Fan speed **AUTO** can not be selected.

NB: In **FAN** mode, the exhaust hose does not need to be connected.

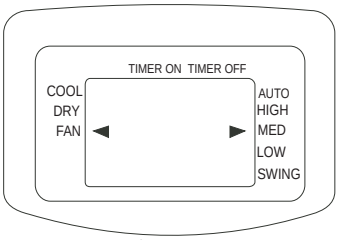

Fig. 18

SETTING THE TIMER (Fig. 19)

This timer can be used to delay the appliance start up or shutdown.
This avoids wasting electricity by optimising operating periods.

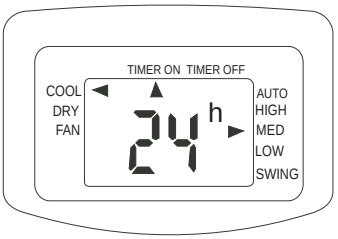

Fig. 19

PROGRAMMED SHUTDOWN

- With the appliance on, press the "**TIMER**" button, the time and the "**h**" symbol are displayed.
- Set the time remaining until shutdown with the " ▲▼ " buttons (from 30 minutes to 24 hours).
- During the first ten hours you can select half hour intervals. For times longer than ten hours, one hour intervals can be selected
- Press the "**TIMER**" button again to confirm the timer setting, the TIMER INDICATOR LIGHT lights up and keeps flashing to indicate the timer is activated.
- At the end of the set time the appliance switches off automatically.
- To cancel the TIMER setting, press the " **TIMER** " button again.

PROGRAMMED STARTUP

- Turn on the appliance and select the required mode, for example Cooling mode, 25°C, fan speed HIGH.
- Press ON/OFF button to switch into STANDBY.
- Press the "**TIMER**" button **twice** , the time and the "**h**" symbol are displayed.
- Set the time remaining until startup with the " ▲▼ " buttons (from 30 minutes to 24 hours) .
- During the first ten hours you can select half hour intervals. For times longer than ten hours one hour intervals can be selected.
- Press the "**TIMER**" again to confirm the timer setting, the TIMER INDICATOR LIGHT lights up and keeps flashing to indicate the timer is activated.
- At the end of the set time the appliance switches on automatically and operates in the selected mode, for example Cooling mode, 25°C, fan speed HIGH.
- To cancel the TIMER setting, press the " **TIMER** " button again.

WATER DRAINAGE METHODS

WATER DRAINAGE (Fig. 20)

This air conditioner is equipped with the very latest MIST technology which means that the water tank does not have to be emptied. This has been verified by independent testing conducted both in Australia and overseas under extremely humid conditions. Water drainage will generally only be required at the end of the season (see End of Season Operations - page 15).

However, the mist technology does not operate when the unit is in dehumidifying (dry mode). Thus, the tank may require emptying on occasions when operating for long periods in this mode.

As a safety measure, to positively prevent water spillage in dehumidifying mode when the mist motor is not operating, the air conditioner is equipped with a fail safe device if the water tank fills. The unit will completely stop including both fan and compressor. The control panel LED displays " Ft" as mentioned in the Section on "Self – Diagnosis" – Page 17 The compressor and fan will not restart until the tank has been drained.

Before draining the water tank (pan) take care not to move the air conditioner as water may spill onto the floor.

Turn the air conditioner off using the on/off switch on the unit or remote control. Then drain the water tank by unplugging the drain outlet and allowing the water to flow onto the drain pan. The drain pan will not hold the full contents of the water tank. A number of fills of the drain pan are required. It may be easier (after 3 or 4 pans have been drained in order to avoid accidental spillage when shifting the air conditioner) to wheel the unit outside, remove the drain plug and drain the water onto the ground.

The water tank is considered sufficiently drained when no more water flows from the drain outlet.

Restart the air conditioner by pressing the on/off button. Ensure that the unit is in COOL or DRY mode. The compressor will start approximately 3 minutes after the unit is switched on.

NOTE: To completely drain all water from the water tank, tilt the unit by lifting it slightly upwards from the front until no more water drains from the outlet.

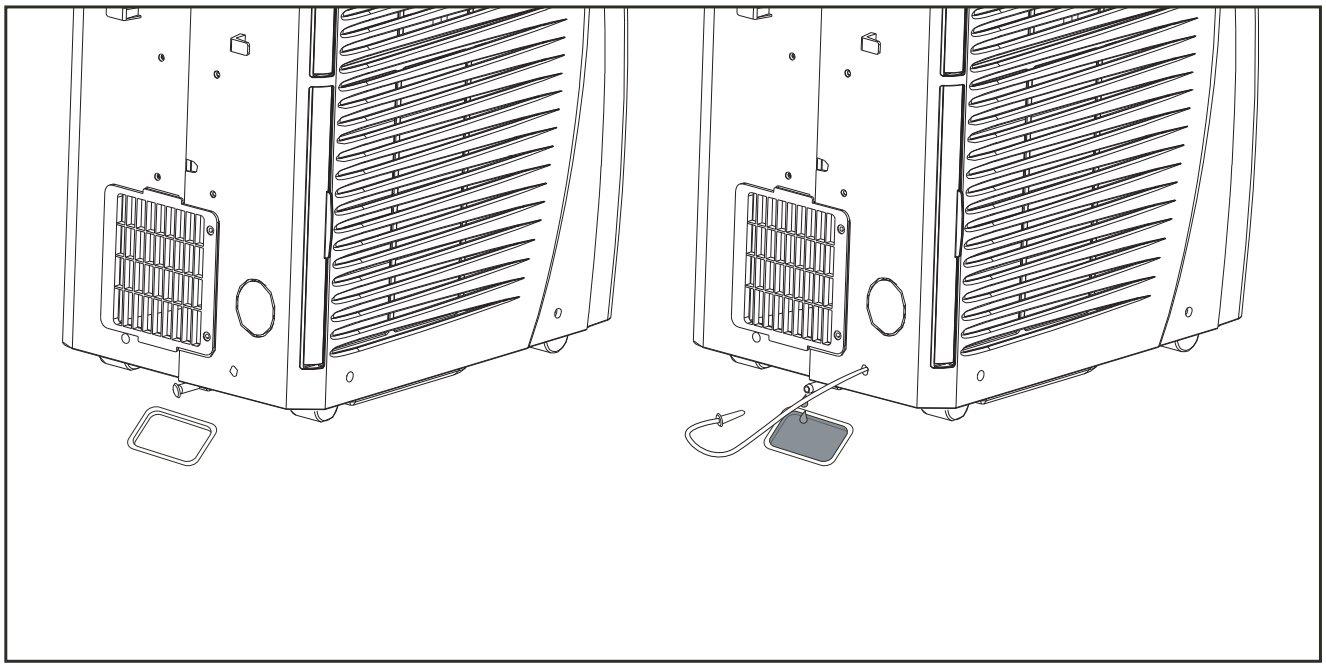

Fig. 20

MAINTENANCE AND SERVICE

MAINTENANCE METHODS

- Before undertaking cleaning or maintenance, turn the appliance off by pressing the ON/OFF button, then always unplug the appliance from the power supply outlet.
- Do not use chemical solvent to clean the surface of the unit. Never spray insecticides or similar in the vicinity of the unit.
- Clean the surface of the unit with a damp cloth, then dry with a duster or similar.

CLEANING THE AIR FILTER

Clean the dust filter once every two weeks of operation. This will keep the air conditioner working efficiently.

- Slide out the air filter from the side as shown in Fig.21.
- Wash the air filter by immersing it gently into warm (about 40°C or 104°F) water with a dishwashing detergent.
- Rinse the filter of detergent and dry it thoroughly in a shaded place.
- Insert the filters back into their original positions.

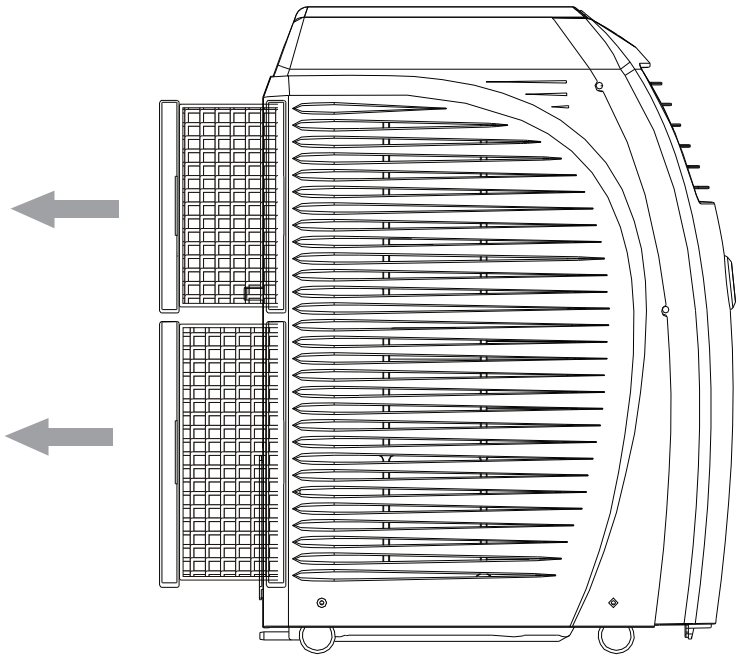

Fig. 21

END OF SEASON OPERATIONS (Fig. 22)

- Switch off the unit and disconnect the plug from the power supply outlet.
- Remove the plug from the drain outlet to drain the water onto the drain pan and dispose of the water. Tilt the unit by lifting it at the front to ensure all water is removed from the water tank. Then operate the unit in fan mode for half a day until the pipe is dry.
- Wind the cable around the cable hooks on the back of the appliance.
- Wrap the appliance with the plastic bag and keep it in a dry place.

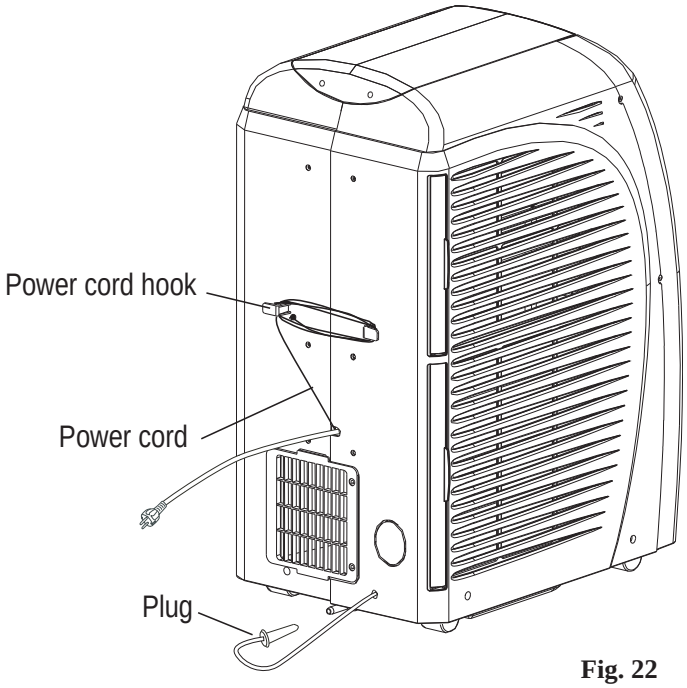

Fig. 22

TROUBLE SHOOTING

Before seeking repair or service, please check the following.

PROBLEM	CHECK	ACTION
No power to Air Conditioner	● Is A/C plugged into power supply outlet? ● Has fuse blown (circuit breaker switched off) or A/C switched off?	● Insert power plug securely into power supply outlet and turn power on ● Turn A/C off, replace fuse wire (or turn on circuit breaker), turn A/C back on
Power to Air Conditioner, but unit does not operate.	● Is timer on?	● Wait for timer to count down or cancel timer setting by pressing TIMER button
Air Conditioner does not cool after turning on.	● Is compressor light illuminated?	● Wait 3 minutes from turning on, safety device prevents compressor (which provides cooling) being turned on for about 3 minutes.
The compressor and fan has stopped.	● Is “Ft” displayed on LCD?	● Drain water
Air Conditioner not cooling satisfactorily.	● Cooling power not enough for the conditions of area or room? ● Air exhaust hose blocked? ● Air exhaust hose bent over? ● Standard air exhaust hose has been extended longer than 1.5m? ● Air exhaust hose detached? ● Window/door opened? ● Air inlet/outlet blocked? ● Air filters dirty? ● Fan speed set at low? ● Has the temperature been set low enough?	● Ensure A/C is suitable for conditions of area and room ● Clear blockage ● Always keep the hose at its shortest length and as straight as possible ● Remove extension, always keep standard hose length less than 1.5 metres ● Connect the hose ● Close the windows/doors to room being cooled ● Clear blockage ● Clean air filter ● Set suitable higher speed ● Reduce Temperature setting
Air Conditioner vibrates.	● Is it leaning or unbalanced?	● Place on level floor
Lt/PF/Ft appears on the display.	● See self-diagnosis section	

Note: In **COOLING MODE**, the compressor is operating when cooled air comes out of the air outlet and the compressor light on the control panel is illuminated. In **DRY MODE**, the compressor operates continuously and compressor light is permanently illuminated.

SELF DIAGNOSIS

The Appliance has a self diagnosis system to identify a number of malfunctions. Follow the proposed action when the code is displayed.

Lt	(LOW TEMPERATURE) Frost protection	When the appliance is operating in dehumidifying mode, this device prevents the formation of ice. The appliance starts up again automatically when the defrosting process is complete.
PF	(PROBE FAILURE) Sensor damaged	If this is displayed, contact Nobo on 1800 my nobo or 1800 69 6626
Ft	(FULL TANK) The water tank is full	Empty the internal tank, see the section on “Water Drainage Method. This is a fail safe display due to protect against spilling water, when the air conditioner is used in dry mode and the mist motor is not operating.

SPECIFICATIONS

TECHNICAL SPECIFICATIONS

Rated voltage	240Volts
Rated power input	2300Watts
Refrigerant	R410a
Cooling capacity	5030Watts

LIMIT CONDITIONS OF AIR CONDITIONING

Room ambience in air conditioning

Temperature	21℃ - 32℃ (cooling)
Relative humidity	60% - 90% (cooling)

SIZE OF APPLIANCE

width	365mm
height	775mm
depth	568mm