

特种计算机

Industrial Computer

产品说明书

User Manual

PPC-1261V SERIES

12″工业平板电脑

12″ Industrial Panel PC

Version: C01

法律资讯

警告提示

为了您的人身安全以及避免财产损失，必须注意本手册中的提示。人身安全的提示用一个警告三角表示，仅与财产损失有关的提示不带警告三角。警告提示根据危险等级由高到低如下表示。

⚠危险
表示如果不采取相应的小心措施，将会导致死亡或者严重的人身伤害。

⚠警告
表示如果不采取相应的小心措施，可能导致死亡或者严重的人身伤害。

⚠小心
带有警告三角，表示如果不采取相应的小心措施，可能导致轻微的人身伤害。

注意
表示如果不注意相应的提示，可能会出现不希望的结果或状态。

合格的专业人员

本文件所属的产品/系统只允许由符合各项工作要求的合格人员进行操作。其操作必须遵照各自附带的文件说明，特别是其中的安全及警告提示。 由于具备相关培训及经验，合格人员可以察觉本产品/系统的风险，并避免可能的危险。

EVOC产品

请注意下列说明：

⚠警告
EVOC产品只允许用于目录和相关技术文件中规定的使用情况。如果要使用其他公司的产品和组件，必须得到EVOC推荐和允许。正确的运输、储存、组装、装配、安装、调试、操作和维护是产品安全、正常运行的前提。必须保证允许的环境条件。必须注意相关文件中的提示。

免责声明

本公司保留对此手册更改的权利，产品后续相关变更时，恕不另行通知。对于任何因安装、使用不当而导致的直接、间接、有意或无意的损坏及隐患概不负责。

订购产品前，请向经销商详细了解产品性能是否符合您的需求。

EVOC 是研祥智能科技股份有限公司的注册商标。本手册所涉及到的其他商标，其所有权为相应的产品厂家所拥有。

研祥智能科技股份有限公司©2016，版权所有，违者必究。未经许可，不得以机械、电子或其它任何方式进行复制。

保修条款：

产品保修期两年。用户如另有要求，以双方签署的合同为准。

欲获更多信息请访问：

研祥网站：http://www.evoc.com

研祥技术支持邮箱：support@evoc.com**（国际）、**support@evoc.cn**（国内）**

免费客服热线： 4008809666

文档说明

本文档适用范围

本文档适用于EVOC PPC-1261V SERIES型号。

约定

在本文档中，术语“整机”或“产品”有时特指EVOC PPC-1261V SERIES产品。

说明

安全相关注意事项

为避免财产损失以及出于个人安全方面的原因，请注意本入门指南中关于安全方面的信息。 文中使用警告三角来指示这些安全信息，警告三角的出现取决于潜在危险的程度。

目 录

1.产品介绍 1
1.1 产品概述 1
1.2 产品规格 1
2.应用规划 6
2.1 运输 6
2.2 贮存 6
2.3 开箱及检查交付的设备 6
3.产品安装说明 7
3.1 安装方式 7
3.1.1 19″上架式安装 7
3.1.2 嵌入面板式安装 8
3.1.3 VESA标准支撑臂安装 9
3.2 产品外形尺寸图 10
3.3 安装尺寸图 11
3.3.1 产品安装尺寸图 11
3.3.2 推荐开孔尺寸图 11
4.设备连接 12
4.1 连接前的注意事项 12
4.2 产品接地 12
4.3 将设备连接到电源 13
5.使用说明 14
5.1 产品外观图 14
5.2 外部控制接口图 15
5.3 产品接口定义 19
5.3.1 DC电源输入插座 19
5.3.2 VGA接口 20
5.3.3 PS/2 键盘鼠标接口 20
5.3.4 网络接口 21
5.3.5 USB接口 21
5.3.6 标准DB9 串口 22

5.3.7 GPIO接口 25
5.3.8 LPT接口 26
5.4 操作控件 27
6.拆装与维护 28
6.1 整体装配图 28
6.2 主板拆装 30
6.2.1 扩展盖拆卸 30
6.2.2 IO面板拆卸 30
6.2.3 散热器拆卸 31
6.2.4 主板拆卸 32
6.2.5 主板安装 33
6.3 硬盘拆装与维护 33
6.3.1 硬盘盖拆卸 33
6.3.2 硬盘模块拆卸 34
6.3.3 硬盘拆卸 35
6.4 CF卡拆装 35
6.4.1 门盖拆卸 35
6.4.2 CF拆卸 36
6.5 SIM卡拆装 37
7.BIOS功能介绍 39
7.1 UEFI简介 39
7.2 UEFI参数设置 39
7.3 UEFI基本功能设置 40
7.4 x86 平台下UEFI所要管理的系统资源 58
8.驱动程序安装说明 62
9.附录 63
9.1 BPI介绍 63
9.2 EVOC一键还原操作说明 65
9.3 常见故障分析与解决 79

1.产品介绍

1.1 产品概述

PPC-1261V SERIES 是一款可触摸工业平板电脑，采用嵌入式 Intel® Celeron J1900（以下简称 Bay Trail 平台）及 Intel® Atom™ D525 处理器（以下简称 Atom 平台），Atom 平台支持 Linux、Windows XP、Windows XPE、Win7、WinCE、DOS 等操作系统；Bay Trail 平台支持 WIN7、WIN8、LINUX。

整机铝合金材质，系统架构采用主板+扩展板设计方案，结构简单，各模块板之间连接采用高可靠连接器对接，保证高可靠性的运行环境，具有良好的防尘、散热、抗振性能。

PPC-1261V SERIES 是一款面向设备控制、监控设备领域，主要用于工业现场机械设备控制、机房监控、楼宇监控设备、电力监控等。

1.2 产品规格

项目		定义
主要功能指标	微处理器	板载 Intel® Celeron J1900、Atom™ D525 CPU
	芯片组	Intel® Atom™ D525+ICH8M Intel® Celeron J1900+Bay Trail
	内存	Atom 平台：提供 1 条 204Pin DDR3 SO-DIMM 内存插槽，支持 Un-buffered，NON-ECC，单条内存插槽可支持最大内存容量 4GB(仅 256M×16 模式) Bay Trail 平台：提供 2 条 204Pin DDR3L SO-DIMM 内存插槽，支持 Un-buffered，NON-ECC，单条内存插槽可支持最大内存容量 4GB，整机标配 4GB 内存，8GB 可选 注： （1）整机内存容量，根据不同配置会有所不同，具体请以实际配置为准 （2）Bay Trail 平台使用单条内存时，必须插 DIMM1

	显示功能	Atom 平台：支持 CRT+LVDS 显示，VGA 最高支持 2048×1536@60Hz 分辨率；LVDS 支持单通道 18bit 液晶屏，最高支持 1366×768 分辨率 Bay Trail 平台：支持 CRT/HDMI 显示， VGA 最高支持 2560×1600@60Hz、 DVI 最高支持 1600×1200 分辨率、HDMI 最高支持显示 1920×1200 分辨率
	网络功能	提供 2 个 10/100/1000Mbps 网络接口，LAN1 可支持网络唤醒功能
	扩展总线	提供 2 个 Mini PCIe 插座，其中 Mini PCIe2 只能用于 3G 制式无线网卡或 mSATA 硬盘
	LCD 屏本体特性	● 显示屏：12″ TFT LED ● 分辨率：1024×768 ● 亮度：350cd/m2 ● 对比度：800：1 ● 可视角度（CR≥10） ● 水平：-70～70°；垂直：-65～60° 注：此参数因配置不同，可能存在差异，具体以实际配置为准

	触摸屏	● 接口形式：USB形式 ● 类型：5线电阻式 注： （1）触摸屏需先安装驱动并进行校正后，方可正常使用 （2）触摸屏在校正时，推荐使用进阶定位中的16点及以上的进阶模式校正（如下图所示）。 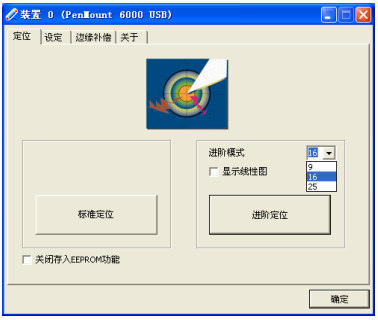
	外部 IO 接口	● 整机最多标配 6 个串口，COM1～COM6 均支持 RS-232/RS-422/ RS-485，默认为 RS-232 注：整机配置不同，串口数量会有所不同 ● 整机最多标配 5 个 USB2.0 接口 注：整机配置不同，USB 接口数量会有所不同，且 Bay Trail 平台整机 USB1 接口支持 USB3.0 ● 1 个 1×10 凤凰端子（8 路 GPIO）或 1 个 LPT（LPT 支持 SSP/EEP/ECP 工作模式及 BIOS 修改工作模式） 注：GPIO 和 LPT 为单一可选接口，不能同时存在，具体请以实际整机配置为准 ● 1 个 VGA 接口 ● 2 个网口（RJ45） ● 1 个 PS/2 键盘、鼠标共用接口 ● 1 个电源输入插座 ● 1 个 RCV 接口（一键还原，详见 EVOC 一键还原操作说明）

主要性能指标	**外形尺寸**	320mm（长）× 242mm（宽）×70mm（高）
	重量	4Kg（PPC-1261V-11） 3.95Kg（PPC-1261V-12）
	温度	● 工作温度: Atom 平台：0℃～45℃（带硬盘机型） -10℃～55℃（带 SSD 机型） Bay Trail 平台：0℃～+40℃(机械硬盘) －30℃～+65℃(CF 卡、电子盘) ● 存储温度：-40℃～80℃
	湿度	5%～95%（温度：+40℃）
	电磁兼容性	● GB 9254-2008 辐射骚扰（A）级 ● GB 9254-2008 传导骚扰（A）级 ● GB/T 17626.2.2006 静电放电（2）级 ● GB/T 17626.4-2006 脉冲群抗扰度（2）级 ● GB/T 17626.5-2008 浪涌（冲击）抗扰度（2）级 ● GB/T 17626.6-2008 传导抗扰度（2）级
	可靠性	● 平均无故障工作时间：MTBF≥10000h ● 平均维修时间：MTTR≤0.5h
	安全性	满足 GB4943-2011 的基本要求

	机械环境适应性	● 关机抗振动：5-17Hz/1.0mm 振幅；17-200Hz/1.0g 加速度 ● 抗冲击：10g 加速度，11ms 周期
	电源特性	● 输入电压/频率：9-30VDC（不带 V 配置整机直接输入）；输入电压/电流：19-30VDC（带 V 配置整机直接输入） ● 整机功耗： Atom 平台：25W（待机状态） 30W（运行 MaxPower 100%） Bay Trail 平台：17.5W（待机状态） 20.5W（运行 Burnintest 100%）
	操作系统	Atom 平台：支持 Linux、Windows XP、Windows XPE、Win7、WinCE、DOS Bay Trail 平台：支持 WIN7、WIN8、LINUX

2.应用规划

2.1 运输

包装好的产品能以任何交通工具，运往任何地点，在长途运输时不得装在敞开的船舱和车厢中，中途转运时不得存放在露天仓库中，在运输过程中不允许和易燃、易爆、易腐蚀的物品同车（或其他运输工具）装运，并且产品不允许经受雨、雪或液体物质的淋湿与机械损坏。

2.2 贮存

产品贮存时应存放在原包装箱内，存放产品的仓库环境温度为 0℃～40℃，相对湿度为 20%～85%。仓库内不允许有各种有害气体、易燃、易爆炸的产品及有腐蚀性的化学物品，并且无强烈的机械振动、冲击和强磁场作用。包装箱应垫离地面至少 10cm，距离墙壁、热源、冷源、窗口或空气入口至少 50cm。

小心
损坏设备的风险！ **在寒冷天气状况下运输 PC 时，应注意温度的极端变化。 这种情况下，请确保设备上或设备内部没有形成水滴（凝露）。如果设备上形成了凝露，请在接通设备前至少等待12个小时。**

2.3 开箱及检查交付的设备

设备开箱

设备开箱时请注意以下几点：

- 建议您不要丢弃原包装材料。 请保留原包装材料以备再次运输设备时使用。
- 请将文档存放在安全的地方。 初始调试设备时需用到该文档，并且它是设备的一部分。
- 检查交付的设备，查看是否在运输途中造成了任何明显的损坏。
- 验证所运货物是否包含完整的设备以及您单独订购的附件。 如有任何不符或存在运输损坏，请联系客户服务人员。

3.产品安装说明

3.1 安装方式

■19″上架式　□桌面式（台面式）　■嵌入面板式

□壁挂式　■VESA 标准支撑臂　□手提便携式

□其他方式_____

3.1.1 19″上架式安装

<table>
<tr><td rowspan="2">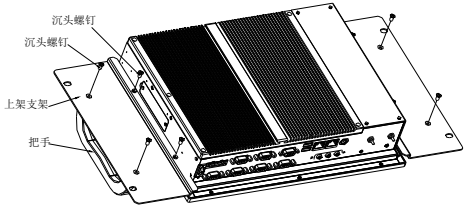
</td><td>步骤 1：按左图所示，先把把手用沉头螺钉（规格：M4×6）固定在上架支架上，然后再用盘头螺钉（规格：M4×6）把上架支架固定在机器上</td></tr>
<tr><td>注意事项：把手、上架支架和所用螺钉为机器的选配件</td></tr>
<tr><td>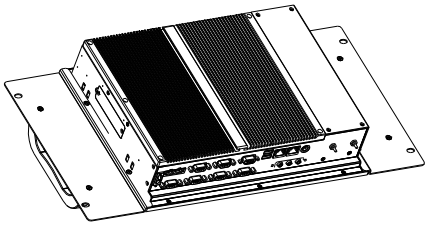</td><td>步骤 2：把机器安装在机柜的相应位置</td></tr>
</table>

3.1.2 嵌入面板式安装

<table>
<tr><td>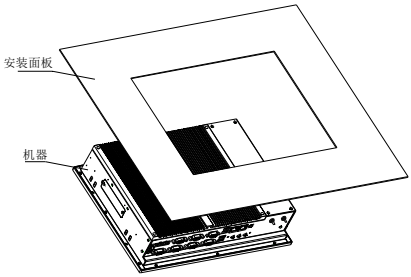
</td><td>步骤 1：按左图所示，把机器放入面板的开孔内</td></tr>
<tr><td rowspan="2">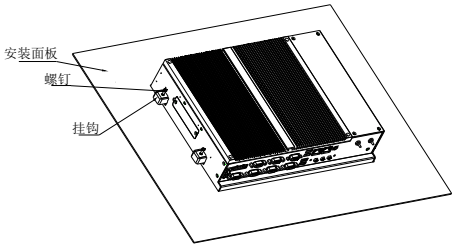
</td><td>步骤 2：把挂钩按图示方向放入机器的开孔内，并按图示方向锁入 M4×55 的螺钉，抵紧面板；
按上述步骤安装另外 3 个挂钩</td></tr>
<tr><td>注意事项：挂钩和螺钉为配件</td></tr>
</table>

3.1.3 VESA标准支撑臂安装

<table>
<tr><td rowspan="2">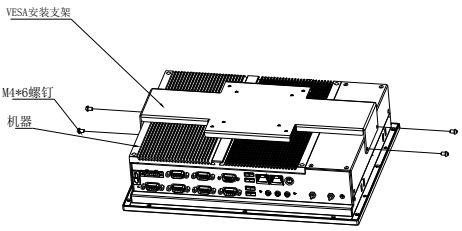
</td><td>步骤：如左图所示，用螺钉M4×6把VESA安装支架固定在机器相应位置</td></tr>
<tr><td>注意事项：VESA安装支架为配件</td></tr>
<tr><td rowspan="2">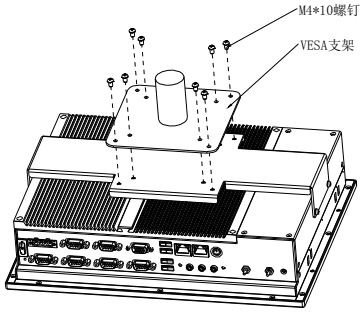
</td><td>步骤：如左图所示，用螺钉把机器固定在支撑臂上</td></tr>
<tr><td>注意事项：安装时须用随机器配备螺钉或按说明书要求选用螺钉</td></tr>
</table>

⚠警告
VESA支臂的承重能力，要至少是整机重量的2倍以上。

3.2 产品外形尺寸图

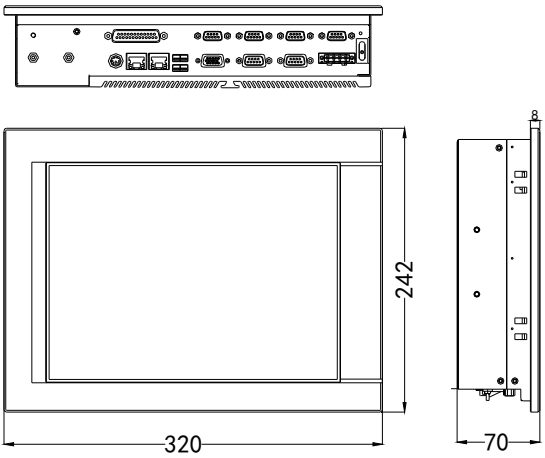

PPC-1261V-0501/0502/0503/0504/0507、PPC-1261-0301/0302

单位：mm

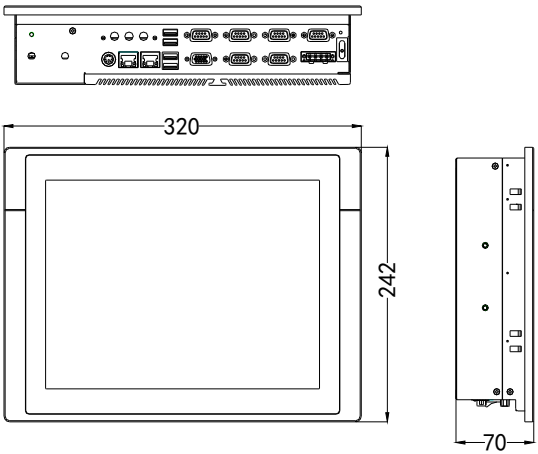

PPC-1261V-11/ PPC-1261V-12

单位：mm

3.3 安装尺寸图

3.3.1 产品安装尺寸图

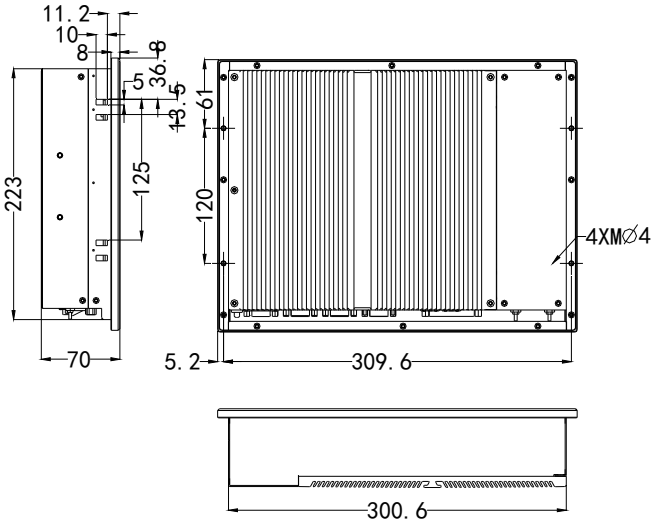

单位：mm

3.3.2 推荐开孔尺寸图

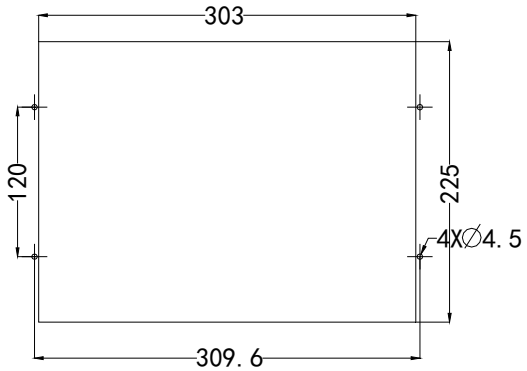

单位：mm

4. 设备连接

4.1 连接前的注意事项

⚠警告
所连接或内置的外围设备不得接入极性相反的设备。

⚠警告
本设备只能在接地电源网络上运行。禁止在未接地或阻抗接地的电源网络上进行操作。

⚠警告
使用的设备额定电压必须符合本产品电源特性。

注意
只能连接经认可适合工业应用的外围设备。PC 运行时，可以连接热插拔 I/O 模块（USB）。无热插拔功能的 I/O 设备只能在设备断开电源后进行连接。

4.2 产品接地

接地端子	
设备上的等电位连接端子①（大表面、大面积接触）必须与安装有 PC 的机柜或设备的中央接地母线连接。最小导线横截面不能小于5㎜^{2}	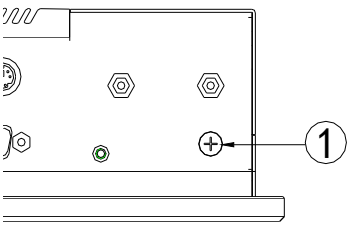

4.3 将设备连接到电源

将设备连接到电源的步骤	
插入电源线时确保电源开关②位于“0”（关闭）位置，以避免设备意外启动	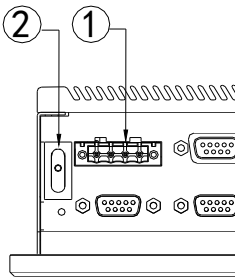
将电源线连接到①插口并接通电源开关②，整机开机	

⚠危险
雷暴雨期间断开电源和数据电缆。

注意
必须断开电源连接器才能将设备与电源完全隔离。

5.使用说明

5.1 产品外观图

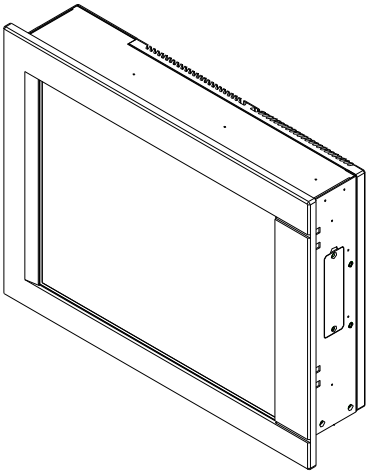

PPC-1261V-0501/0502/0503/0504/0507、PPC-1261-0301/0302

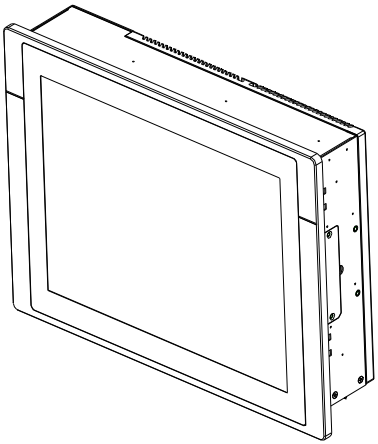

PPC-1261V-11/ PPC-1261V-12

5.2 外部控制接口图

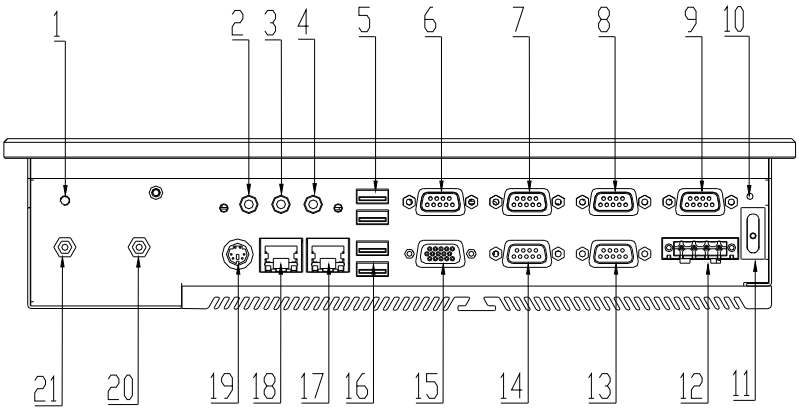

PPC-1261V-0502/0503、PPC-1261-0301 配置下侧面控制图

项目	描述	项目	描述	项目	描述
1	接地螺钉	2	音频输出	3	麦克风
4	音频输入	5	USB3/4	6	串口 3
7	串口 4	8	串口 5	9	串口 6
10	一键还原	11	电源开关	12	电源接口
13	串口 2	14	串口 1	15	VGA
16	USB1/2	17	网口 2	18	网口 1
19	鼠标/键盘接口	20	ANT2	21	ANT1

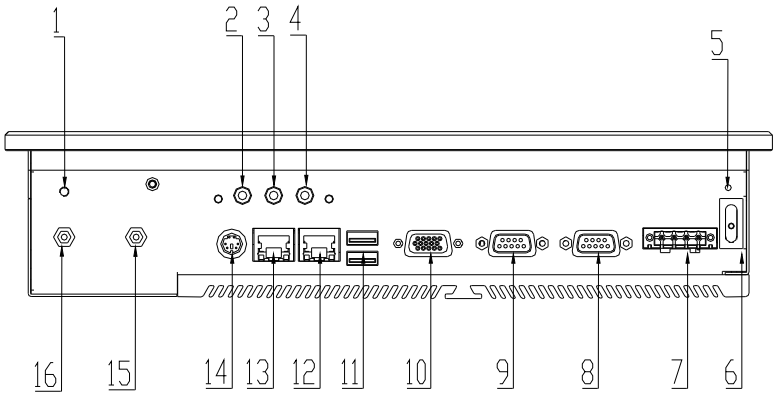

PPC-1261V-0504 配置下侧面控制图

项目	描述	项目	描述	项目	描述
1	接地螺钉	2	音频输出	3	麦克风
4	音频输入	5	一键还原	6	电源开关
7	电源接口	8	串口 2	9	串口 1
10	VGA	11	USB1/2	12	网口 2
13	网口 1	14	鼠标/键盘接口	15	ANT2
16	ANT1				

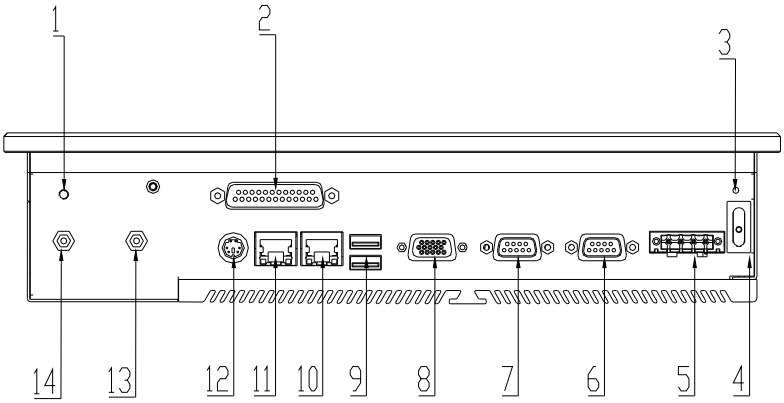

PPC-1261V-0501/0507、PPC-1261-0302 配置下侧面控制图

项目	描述	项目	描述	项目	描述
1	接地螺钉	2	并口	3	一键还原
4	电源开关	5	电源接口	6	串口 2
7	串口 1	8	VGA	9	USB1/2
10	网口 2	11	网口 1	12	鼠标/键盘接口
13	ANT2	14	ANT1		

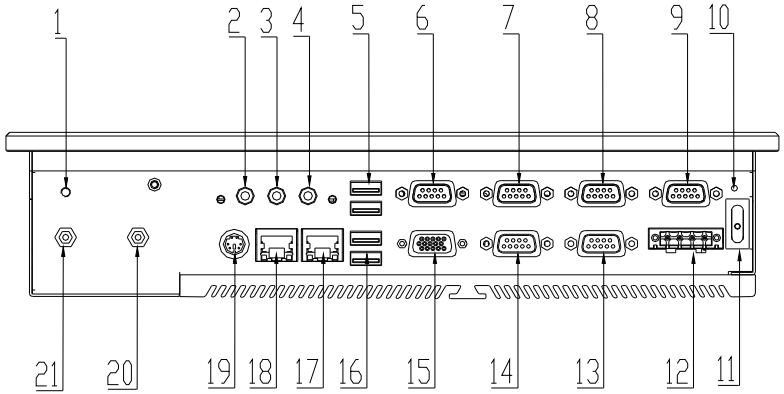

PPC-1261V-11 配置下侧面控制图

项目	描述	项目	描述	项目	描述
1	接地螺钉	2	音频输出	3	麦克风
4	音频输入	5	USB3/4	6	串口 3
7	串口 4	8	串口 5	9	串口 6
10	一键还原	11	电源开关	12	电源接口
13	串口 2	14	串口 1	15	VGA
16	USB1/2	17	网口 2	18	网口 1
19	鼠标/键盘接口	20	ANT2	21	ANT1

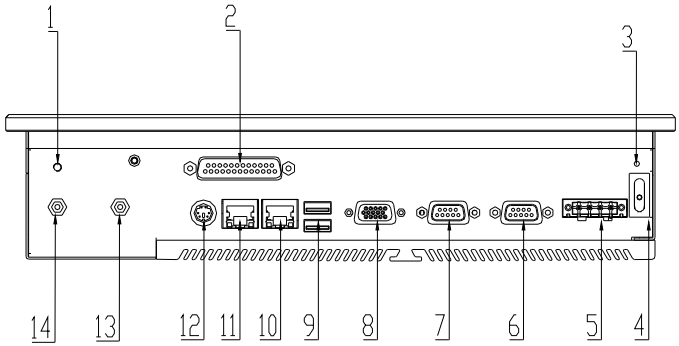

PPC-1261V-12 配置下侧面控制图

项目	描述	项目	描述	项目	描述
1	接地螺钉	2	并口	3	一键还原
4	电源开关	5	电源接口	6	串口 2
7	串口 1	8	VGA	9	USB1/2
10	网口 2	11	网口 1	12	鼠标/键盘接口
13	ANT2	14	ANT1		

5.3 产品接口定义

5.3.1 DC电源输入插座

提供 1 个 4P 卧式凤凰端子插座，支持单电源输入，管脚定义如下：



DC IN

管脚	信号名称
1	正
2	负
3	SW-
4	SW+

注：SW+、SW-:远程开关机输入信号，ATX 模式下触发 SW+、SW-两脚开关机。

5.3.2 VGA接口

提供 1 个标准 DB15 VGA 接口，管脚定义如下：

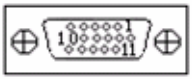

VGA

管脚	信号名称	管脚	信号名称
1	Red	2	Green
3	Blue	4	NC
5	GND	6	GND
7	GND	8	GND
9	NC	10	GND
11	NC	12	DDCDATA
13	HSYNC	14	VSYNC
15	DDCCLK		

5.3.3 PS/2 键盘鼠标接口

提供 1 个 PS/2 鼠标键盘接口。

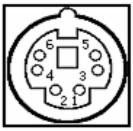

MS/KB

管脚	信号名称
1	KB_DATA
2	MS_DATA
3	GND
4	+5V
5	KB_CLK
6	MS_CLK

5.3.4 网络接口

LAN1，LAN2 是标准 RJ45 连接器，为 10/100/1000Mbps 以太网接口，其中 LILED 和 ACTLED 是以太网接口两边的 LED，它们显示着 LAN 的网络速度指示状态和网络活动指示状态。请参考以下每一个 LED 的状态描述。

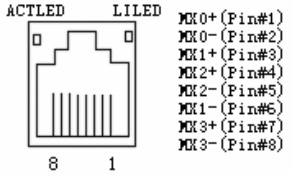

LAN1，LAN2

ACTLED （单色:绿色灯）	网络活动 指示状态		LILED （双色:橙绿双色）	网络速度 指示状态
			绿色	1000Mbps
闪烁	有数据传输		橙色	100Mbps
灭	无数据传输		灭	10Mbps

注：千兆网卡不管有/无 Link 信号，左边的 ACTLED 灯表示的是有无数据传输，有数据传输时，左边的绿色灯应为“闪烁”状态；只连接网络未收发数据时，绿色灯应为“熄灭”状态；有广播包时，ACTLED 灯会“闪烁”属于正常。

5.3.5 USB接口

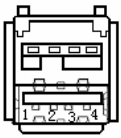

USB2，USB3，USB4

管脚	信号名称
1	+5V
2	USB_Data-
3	USB_Data+
4	GND

注：USB5 在整机内部，使用线材引出，为标准 USB2.0 单层接口，用于加密狗等设备，定义参考以上表格，不在此单独列出。

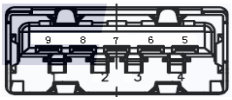

USB1

管脚	信号名称
1	+5V_USB
2	USB_DATA-
3	USB_DATA+
4	GND
5	USB_SSRX-
6	USB_SSRX+
7	GND
8	USB_SSTX-
9	USB_SSTX+

注：仅 Bay Trail 平台整机 USB1 支持 USB3.0。

5.3.6 标准DB9 串口

整机最多提供 6 个 COM 口，COM1～COM6 支持 RS-232/RS-422/RS-485 模式，管脚定义如下：

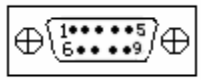

COM1～COM6

管脚	信号名称		
	RS-232 (Default)	RS-422	RS-485
1	DCD#	TXN	DATA-
2	RXD	TXP	DATA+
3	TXD	RXP	NC
4	DTR#	RXN	NC
5	GND	GND	GND
6	DSR#	NC	NC
7	RTS#	NC	NC
8	CTS#	NC	NC
9	RI#	NC	NC

注：串口在 RS-485 模式下，BIOS 中 Advanced →Super IO Configuration，Serial Port 1 Configuration→COMA RS485 AUTO Flow Control 改为 Enabled，COM1 可实现自动收发；Serial Port 2 Configuration→COMB RS485 AUTO Flow Control 改为 Enabled，COM2 可实现自动收发。其它情况下，COM1-COM6 数据收发方向为 RTS 控制。

COM1、COM2的RS-232/RS-422/RS-485模式选择定义：

JP1、JP2、JP3--COM1 模式选择； JP4、JP5、JP6--COM2 模式选择。

	COM1	COM2	RS-232 (Default)	RS-422	RS-485
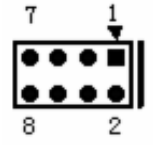 JP1、JP2、JP3 JP4、JP5、JP6	JP1	JP4	1-2	3-4	5-6、7-8
	JP2	JP5	1-3	3-5	3-5
			2-4	4-6	4-6
	JP3	JP6	1-3	3-5	3-5
			2-4	4-6	4-6

COM3～COM6的RS-232/RS-422/RS-485模式选择定义:

JP7、JP8、JP9—COM3模式选择； JP11、JP12、JP13—COM4模式选择；

JP15、JP16、JP17—COM5模式选择； JP19、JP20、JP21—COM6模式选择。

	COM3	COM4	COM5	COM6	RS-232 (Default)	RS-422	RS-485
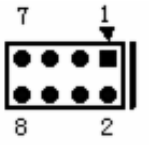 JP7、JP8、JP9 JP11、JP12、JP13 JP15、JP16、JP17 JP19、JP20、JP21	JP7	JP11	JP15	JP19	1-2	3-4	5-6、7-8
	JP8	JP12	JP16	JP20	1-3	3-5	3-5
					2-4	4-6	4-6
	JP9	JP13	JP17	JP21	1-3	3-5	3-5
					2-4	4-6	4-6

终端匹配模式选择：

当 COM1～COM6 在 RS-485 模式下，建议通信距离超过 300M 时，进行终端匹配模式设置接入 120Ω终端电阻（注：该通信距离仅为一般建议值，具体长度，请以实际使用时的信号质量做调整）。

JP2、JP3---COM1 终端匹配模式选择； JP5、JP6---COM2 终端匹配模式选择。

	设置	功能
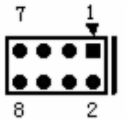 JP2、JP3 JP5、JP6	7-8 短路	接入终端电阻
	7-8 开路	断开终端电阻（Default）

JP10---COM3 终端匹配模式选择； JP14---COM4 终端匹配模式选择；

JP18---COM5 终端匹配模式选择； JP22---COM6 终端匹配模式选择。

	设置	功能
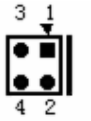 JP10、JP14 JP18、JP22	1-2、3-4 短路	接入终端电阻
	1-2、3-4 开路	断开终端电阻（Default）

5.3.7 GPIO接口

	管脚	信号名称	管脚	信号名称
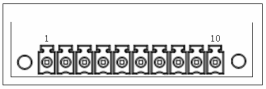 GPIO （脚距：3.81mm）	1	GPIO1	2	GPIO2
	3	GPIO3	4	GPIO4
	5	GPIO5	6	GPIO6
	7	GPIO7	8	GPIO8
	9	GND	10	VCC

注：出厂默认状态为高电平，输入输出信号的电压范围为 0-5V。

BIOS 初始化前，GPIO 输出状态设置

JP1(1-2)	GPIO OUT：H(Default)
JP1(2-3)	GPIO OUT：L

注：GPIO1 是通过扩展板引出，JP1 在扩展板上。

5.3.8 LPT接口

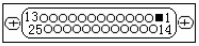

LPT1

管脚	信号名称	管脚	信号名称
1	STB#	14	AFD#
2	PD0	15	ERR#
3	PD1	16	INIT#
4	PD2	17	SLIN#
5	PD3	18	GND
6	PD4	19	GND
7	PD5	20	GND
8	PD6	21	GND
9	PD7	22	GND
10	ACK#	23	GND
11	BUSY	24	GND
12	PE	25	GND
13	SLCT	26	NC

5.4 操作控件

⚠警告
开/关按钮信号不会切断 PC 电源!

⚠小心
PC 执行硬件复位时可能会丢失数据。

控件按钮	项目	描述
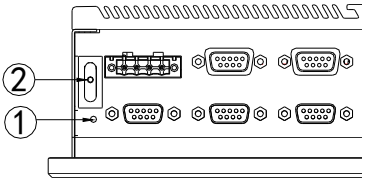	1	一键还原按钮 使用尖物或回形针可操作还原按钮。 按钮信号将触发整机进入还原界面
	2	开关按钮 用于开关设备的开/关按钮

6. 拆装与维护

6.1 整体装配图

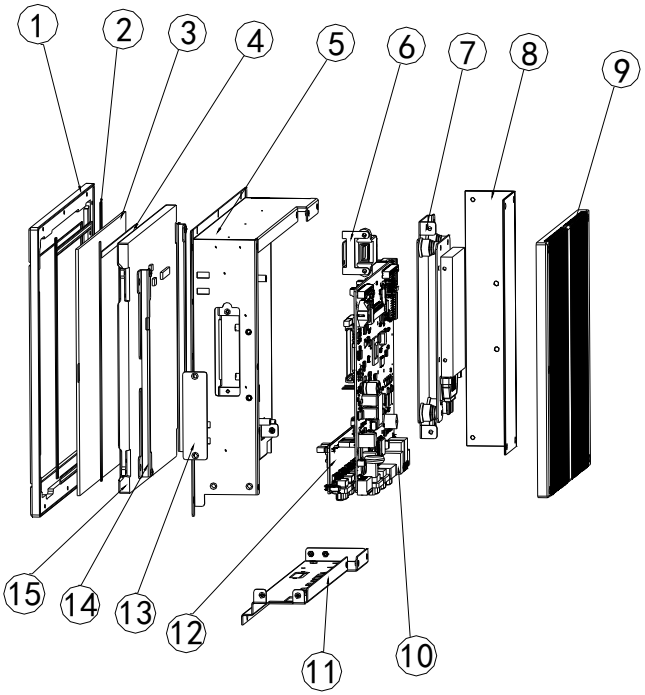

PPC-1261V-0501/0502/0503/0504/0507、PPC-1261-0301/0302

项目	描述	项目	描述	项目	描述
1	前面板	2	密封条	3	触摸屏
4	减震泡棉	5	箱体组件	6	USB 组件
7	硬盘组件	8	硬盘盖	9	箱盖
10	主板	11	IO 面板	12	IO 板
13	CF 门盖	14	屏支架	15	显示屏

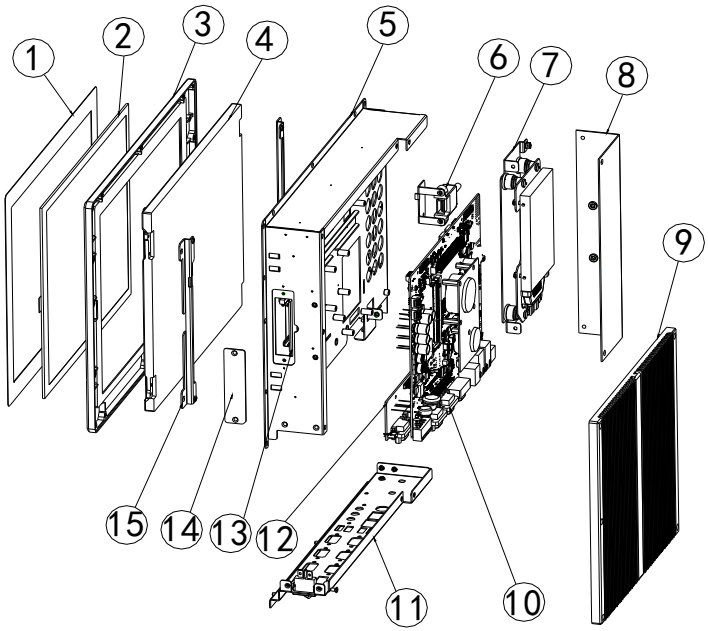

PPC-1261V-11/ PPC-1261V-12

项目	描述	项目	描述	项目	描述
1	面膜	2	触摸屏	3	铝合金面板
4	显示屏	5	箱体组件	6	USB 组件
7	硬盘组件	8	硬盘盖	9	箱盖
10	主板	11	IO 面板	12	IO 板
13	CF 卡	14	CF 门盖	15	屏支架

6.2 主板拆装

6.2.1 扩展盖拆卸

如下图所示，先拆卸固定硬盘盖的6颗沉头螺钉和固定箱盖的5颗沉头螺钉，然后将硬盘盖和箱盖向上取下。

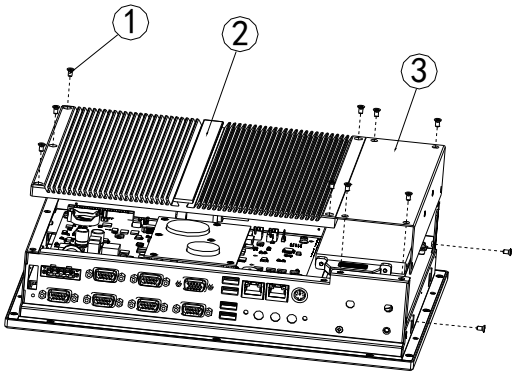

项目	描述	项目	描述
1	沉头螺钉	2	箱盖
3	硬盘盖		

6.2.2 IO面板拆卸

如下图所示，拆卸侧面 3 颗，正面一颗，下面 3 颗共 7 颗 M3 沉头螺钉，然后再将 IO 面板稍微摆动，松动后将 IO 面板向后拆卸出机箱。

注：拆卸 IO 面板前，请先将开关线等从主板上拔掉，并且要先把 VGA，COM 口等端口上的六角螺柱从前面板拆卸下来。

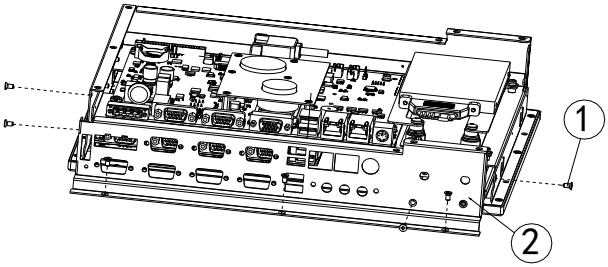

项目	描述	项目	描述
1	M3 沉头螺钉	2	IO 面板

6.2.3 散热器拆卸

如下图所示，先拆卸散热片上方的 6 颗 M3 沉头螺钉，然后将散热铝块向上取下。

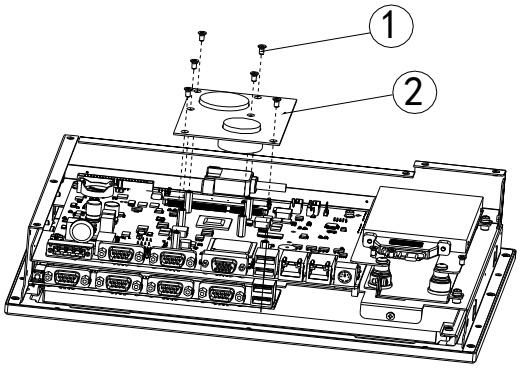

PPC-1261V-0501/0502/0503/0504/0507、PPC-1261-0301/0302

项目	描述	项目	描述
1	M3 沉头螺钉	2	散热器

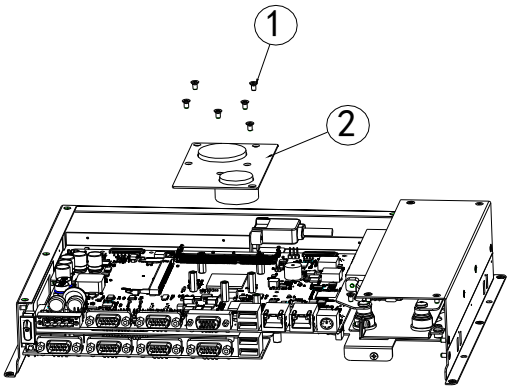

PPC-1261V-11/ PPC-1261V-12

项目	描述	项目	描述
1	M3 沉头螺钉	2	散热器

6.2.4 主板拆卸

如下图所示，拆卸的 4 颗 M3 带垫圈组合螺钉和 6 颗六角铜螺柱，然后再将主板水平向上抬起，待对插的插针脱出后，再将显示屏线，触摸屏线和硬盘线拔下，主板向上取出机箱。

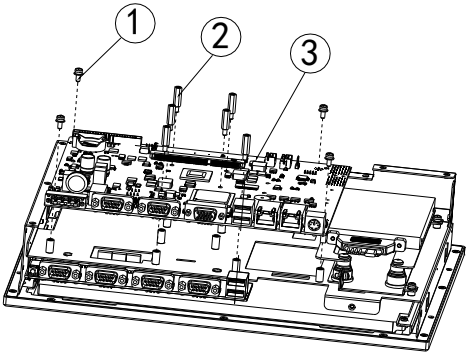

PPC-1261V-0501/0502/0503/0504/0507、PPC-1261-0301/0302

项目	描述	项目	描述
1	M3×8 盘头组合螺钉	2	六角铜螺柱
3	主板		

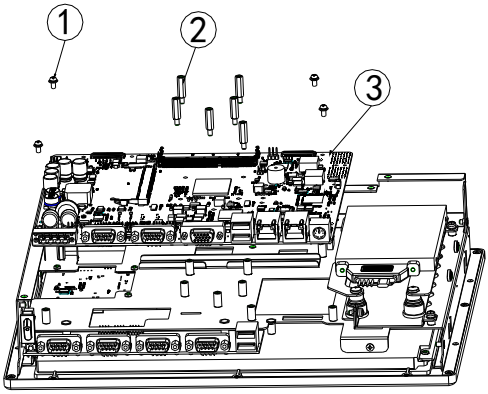

PPC-1261V-11/ PPC-1261V-12

项目	描述	项目	描述
1	M3×8 盘头组合螺钉	2	六角铜螺柱
3	主板		

6.2.5 主板安装

安装主板请参照前面的 6.2.1 到 6.2.4 步骤，逆向操作。

6.3 硬盘拆装与维护

6.3.1 硬盘盖拆卸

如下图所示，先拆卸硬盘盖表面的 4 颗 M3 沉头螺钉，然后将硬盘盖向上取下。

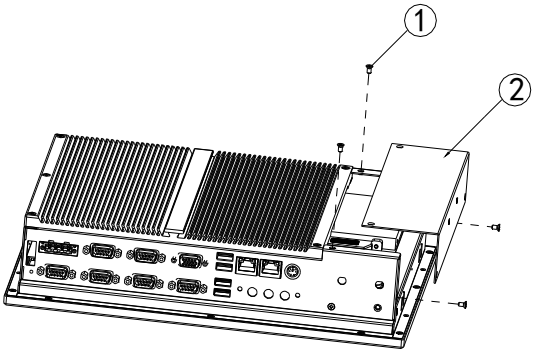

项目	描述	项目	描述
1	M3 沉头螺钉	2	硬盘盖

6.3.2 硬盘模块拆卸

如下图所示，先拆卸固定硬盘模块的 4 颗 M3 盘头组合螺钉，直接向外取出硬盘模块。

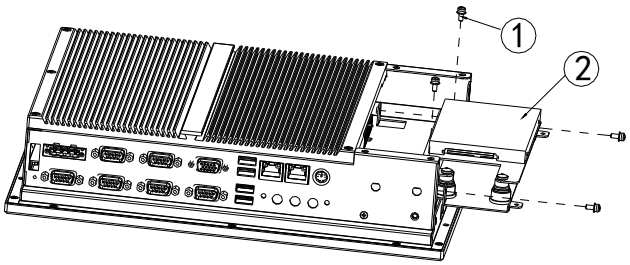

项目	描述	项目	描述
1	M3 盘头组合螺钉	2	硬盘模块

6.3.3 硬盘拆卸

如下图所示，拆卸模块上的 4 颗硬盘固定螺钉，更换硬盘。

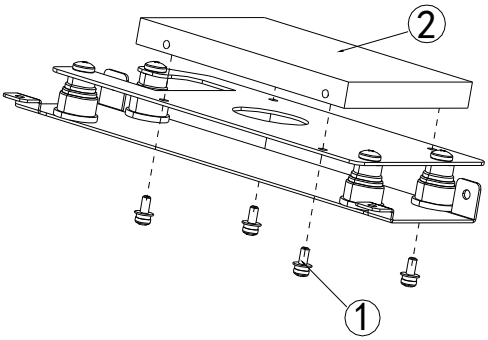

项目	描述	项目	描述
1	M3 盘头组合螺钉	2	硬盘

硬盘安装好后，按照前面两个步骤逆向操作，即可安装硬盘模块。

6.4 CF卡拆装

6.4.1 门盖拆卸

如下图所示，先拆卸门盖表面的 2 颗 M3 沉头螺钉，然后将门盖稍向外翻后向上取下。

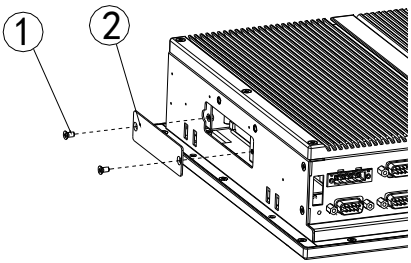

PPC-1261V-0501/0502/0503/0504/0507、PPC-1261-0301/0302

项目	描述	项目	描述
1	M3 沉头螺钉	2	门盖

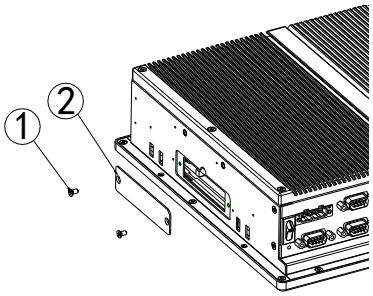

PPC-1261V-11/ PPC-1261V-12

项目	描述	项目	描述
1	M3 沉头螺钉	2	门盖

6.4.2 CF拆卸

按照 6.4.1 步骤拆卸扩展盖后，如下面图所示，用手指推压卡座推杆，CF 卡弹出后，用手指夹住 CF 卡拿出机箱。

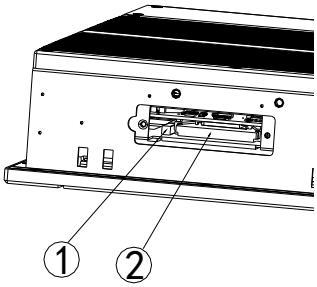

PPC-1261V-0501/0502/0503/0504/0507、PPC-1261-0301/0302

项目	描述	项目	描述
1	CF 卡座推杆	2	CF 卡

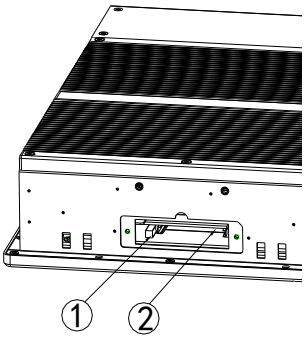

PPC-1261V-11/ PPC-1261V-12

项目	描述	项目	描述
1	CF 卡座推杆	2	CF 卡

注：使用 CF 卡时，请将 CMOS 设置中 Advanced 菜单下 IDE Configuration 中的 SATA MODE 设为 IDE 模式。

6.5 SIM卡拆装

按照 6.2.1 步骤拆卸扩展盖后，如下面图所示，将一根手指伸到开口中间，轻轻向内按压一下 SIM 卡后，手指迅速退出，SIM 卡会自动弹出，最后可用手指夹住 SIM 卡拿出机箱。

注意：如遇到 SIM 卡弹出行程不够的情况，可以将 SIM 重新按压到位，然后再按压一次，即可重新让 SIM 卡弹出。也可以借助摄子等工具将 SIM 卡夹出。

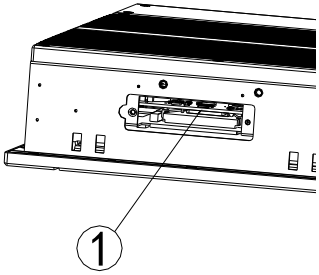

PPC-1261V-0501/0502/0503/0504/0507、PPC-1261-0301/0302

项目	描述
1	SIM 卡

拆卸屏组件后，如下面图所示，将一根手指伸到开口中间，轻轻向内按压一下 SIM 卡后，手指迅速退出，SIM 卡会自动弹出，最后可用手指夹住 SIM 卡拿出机箱。

注意：如遇到 SIM 卡弹出行程不够的情况，可以将 SIM 重新按压到位，然后再按压一次，即可重新让 SIM 卡弹出。也可以借助摄子等工具将 SIM 卡夹出。

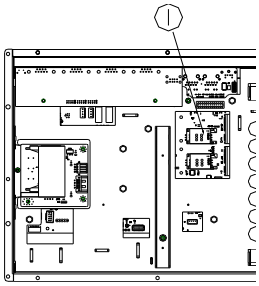

PPC-1261V-11/ PPC-1261V-12

项目	描述
1	SIM 卡

7.BIOS功能介绍

7.1 UEFI简介

UEFI（Unified Extensible Firmware Interface：标准的可扩展固件接口），是新一代的计算机固件，用于取代传统的 BIOS。UEFI 固件存储在主板的闪存存储器中，主要功能包括：初始化系统硬件，设置各系统部件的工作状态，调整各系统部件的工作参数，诊断系统各部件的功能并报告故障，给上层软件系统提供硬件操作控制接口，引导操作系统等。UEFI 提供用户一个菜单式的人机接口，方便用户配置各系统参数设置，控制电源管理模式，调整系统设备的资源分配等。

正确设置 UEFI 的各项参数，可使系统稳定可靠地工作，同时也能提升系统的整体性能。不适当的甚至错误的 UEFI 参数设置，则会使系统工作性能大为降低，使系统工作不稳定，甚至无法正常工作。

7.2 UEFI参数设置

每当系统接通电源，正常开机后，便可看见进入 UEFI 设置程序提示的信息。此时(其它时间无效)，按下提示信息所指定的按键（通常为<Del>键或<ESC>键）即可进入 UEFI 设置程序。

通过 UEFI 设置程序修改的所有设置值（除了日期、时间）都保存在系统的闪存存储器中，即使掉电或拔掉主板电池，其内容也不会丢失；而日期、时间则保存在系统的 CMOS 存储器中，该 CMOS 存储器由电池供电，即使切断外部电源，其内容也不会丢失，除非执行清除 CMOS 内容的操作。

注意！UEFI 的设置直接影响到电脑的性能，设置错误的参数将造成电脑的损坏，甚至不能开机，请使用 UEFI 内置缺省值来恢复系统正常运行。

由于本公司不断研发更新 UEFI，其设置界面也会略有不同，以下的画面供您参考，有可能跟您目前所使用的 UEFI 设置程序不完全相同。

7.3 UEFI基本功能设置

当SETUP程序启动之后,您可以看到Aptio Setup Utility – Copyright (C) 2016 American Megatrends, Inc.主画面如下:

Aptio Setup Utility – Copyright (C) 2016 American Megatrends, Inc.			
Main Advanced Chipset Security Boot Save & Exit			
Motherboard Information			Set the Date. Use 'Tab' to switch between Date elements.
Project Name	ECS-1828		
BIOS Name	G9194005 x64		
BIOS Version	B00		→←: Select Screen
Build Date	03/11/2014	15:50:22	↑ ↓: Select Item
Memory Information			Enter: Select
Total Memory	4096 MB (DDR3L)		+/-: Change Opt
			F1: General Help
System Date	[Mon 11/01/2009]		F2: Previous Values
System Time	[00:47:55]		F3: Optimized Defaults
			F4: Save&Exit
Access Level	Administrator		ESC: Exit
Version 2.17.1249 Copyright (C) 2016 American Megatrends, Inc.			

◆ **Main**

➢ **System Date**

选择此选项，用< + > / < - >来设置目前的日期。以月/日/年的格式来表示。各项目合理的范围是：Month/月(1-12)， Date/日(01-31),Year/年(最大至2099)， Week/星期(Mon.～ Sun.)。

➢ **System Time**

选择此选项，用< + > / < - >来设置目前的时间。以时/分/秒的格式来表示。各项目合理的范围是：Hour/时(00-23)， Minute/分(00-59),Second/秒(00-59)。

◆ **Advanced**

Aptio Setup Utility – Copyright (C) 2016 American Megatrends, Inc.	
Main **Advanced** Chipset Security Boot Save & Exit	
▶ COM7-COM10 Configuration ▶ COM3-COM6 Configuration ▶ Super IO Configuration ▶ Hardware Monitor ▶ CPU Configuration ▶ PPM Configuration ▶ IDE Configuration ▶ Miscellaneous Configuration ▶ USB Configuration ▶ EVOC Features	→←: Select Screen ↑ ↓: Select Item Enter: Select +/-: Change Opt F1: General Help F2: Previous Values F3 : Optimized Defaults F4: Save&Exit ESC: Exit
Version 2.17.1249 Copyright (C) 2016 American Megatrends, Inc.	

➢ **COM7-COM10 Configuration**

Aptio Setup Utility – Copyright (C) 2016 American Megatrends, Inc.	
Advanced	
COM7-COM10 Configuration ▶Serial Port 7 Configuration ▶Serial Port 8 Configuration ▶Serial Port 9 Configuration ▶Serial Port 10 Configuration	→←: Select Screen ↑ ↓: Select Item Enter: Select +/-: Change Opt F1: General Help F2: Previous Values F3: Optimized Defaults F4: Save&Exit ESC: Exit
Version 2.17.1249 Copyright (C) 2016 American Megatrends, Inc.	

- Serial Port Configuration

Aptio Setup Utility – Copyright (C) 2016 American Megatrends, Inc.	
Advanced	
Serial Port 7～10 Configuration Serial Port [Enabled] Device Settings IO=3F8h; IRQ=4;	→←: Select Screen ↑ ↓: Select Item Enter: Select +/-: Change Opt F1: General Help F2: Previous Values F3: Optimized Defaults F4: Save&Exit ESC: Exit
Version 2.17.1249 Copyright (C) 2016 American Megatrends, Inc.	

*** Serial Port7～10**

此项用于打开或关闭当前串口。

*** Device Settings**

此项用于显示串口当前的资源配置。

- COM3-COM6 Configuration

Aptio Setup Utility – Copyright (C) 2016 American Megatrends, Inc.	
Advanced	
COM3-COM6 Configuration ►Serial Port 3 Configuration ►Serial Port 4 Configuration ►Serial Port 5 Configuration ►Serial Port 6 Configuration	→←: Select Screen ↑ ↓: Select Item Enter: Select +/-: Change Opt F1: General Help F2: Previous Values F3: Optimized Defaults F4: Save&Exit ESC: Exit
Version 2.17.1249 Copyright (C) 2016 American Megatrends, Inc.	

- Serial Port Configuration

Aptio Setup Utility – Copyright (C) 2016 American Megatrends, Inc.	
Advanced	
Serial Port 3～6 Configuration Serial Port [Enabled] Device Settings IO=3F8h; IRQ=4; Serial Mode [232]	→←: Select Screen ↑ ↓: Select Item Enter: Select +/-: Change Opt F1: General Help F2: Previous Values F3: Optimized Defaults F4: Save&Exit ESC: Exit
Version 2.17.1249 Copyright (C) 2016 American Megatrends, Inc.	

*** Serial Port7～10**

此项用于打开或关闭当前串口。

*** Device Settings**

此项用于显示串口当前的资源配置。

*** Serial Mode**

此项用于选择串口的通讯模式[232]、[422]、[485]，如果选择是 422 或者 485 模式还会有 Uart RS485/422 Terminal 选项选择自动流控功能，选项选择使能自动流控功能，232 模式下必须 DISABLE。

➢ Super IO Configuration

Aptio Setup Utility – Copyright (C) 2016 American Megatrends, Inc.	
Advanced	
Super IO Configuration ►Serial Port 1 Configuration ►Serial Port 2 Configuration ►Parallel Port Configuration	→←: Select Screen ↑ ↓: Select Item Enter: Select +/-: Change Opt F1: General Help F2: Previous Values F3: Optimized Defaults F4: Save&Exit ESC: Exit
Version 2.17.1249 Copyright (C) 2016 American Megatrends, Inc.	

● Serial Port Configuration

Aptio Setup Utility – Copyright (C) 2016 American Megatrends, Inc.	
Advanced	
Serial Port 1～2 Configuration Serial Port [Enabled] Device Settings IO=3F8h; IRQ=4;	→←: Select Screen ↑ ↓: Select Item Enter: Select +/-: Change Opt F1: General Help F2: Previous Values F3: Optimized Defaults F4: Save&Exit ESC: Exit
Version 2.17.1249 Copyright (C) 2016 American Megatrends, Inc.	

*** Serial Port7～10**

此项用于打开或关闭当前串口。

*** Device Settings**

此项用于显示串口当前的资源配置。

*** UART RS485/422 Terminal [Disable]**

选项选择使能自动流控功能，232 模式下必须 DISABLE。

➢ **Hardware Monitor**

Aptio Setup Utility – Copyright (C) 2016 American Megatrends, Inc.	
Advanced	
PC Health Status	→←: Select Screen
	↑ ↓: Select Item
System temperature : +36 C	Enter: Select
CPU temperature : +43 C	+/-: Change Opt
	F1: General Help
Vcore : +0.848 V	F2: Previous Values
V3.3 : +3.328 V	F3: Optimized Defaults
V5.0 : +5.058 V	F4: Save&Exit
VBAT : +3.232 V	ESC: Exit
Version 2.17.1249 Copyright (C) 2016 American Megatrends, Inc.	

显示当前所侦测到得硬件的电压，温度等监控信息。

- **System temperature**

  当前系统温度，一般主板上有热敏电阻监测。

- **CPU temperature**

  当前 CPU 温度。

- **Vcore**

  CPU 核心电压。

- **V3.3/ V5.0**

  开关电源输出电压。

- **VBAT**

  CMOS 电池电压。

➢ **CPU Configuration**

Aptio Setup Utility – Copyright (C) 2016 American Megatrends, Inc.	
Advanced	
CPU Configuration ►Socket 0 CPU Information ►**CPU Thermal Configuration** CPU Speed 2001 MHZ 64-bit Supported Limit CPUID Maximum [Disabled] Execute Disable Bit [Enabled] Intel Virtualization Tech [Enabled] Power Technology [Energy Efficient]	→←: Select Screen ↑ ↓: Select Item Enter: Select +/-: Change Opt F1: General Help F2: Previous Values F3: Optimized Defaults F4: Save&Exit ESC: Exit
Version 2.17.1249 Copyright (C) 2016 American Megatrends, Inc.	

显示 CPU 的相关信息。注意，CPU 的 Socket, Speed 等跟平台所安装的 CPU 有关，不同系列、型号的 CPU 所显示的信息不同。

- **Intel Virtualization Technology**

  Intel 虚拟化技术，使用虚拟机或某些 Linux 系统时需要使能此功能。

- **Power Technology**

  打开或者关闭 CPU 的电源管理功能。当选择 Customer 时，EIST、Turbo Mode 等选项才会显示出来。

➢ **PPM Configuration**

Aptio Setup Utility – Copyright (C) 2016 American Megatrends, Inc.	
Advanced	
PPM Configuration ►Max CPU C-state [C7]	→←: Select Screen ↑ ↓: Select Item Enter: Select +/-: Change Opt F1: General Help F2: Previous Values F3: Optimized Defaults F4: Save&Exit ESC: Exit
Version 2.17.1249 Copyright (C) 2016 American Megatrends, Inc.	

- **Max CPU C-state**

  选择 CPU 的 C 状态，C7 最节能，C1 最耗电。以此类推。

➢ **IDE Configuration**

Aptio Setup Utility – Copyright (C) 2016 American Megatrends, Inc.	
Advanced	
IDE Configuration Serial-ATA (SATA) [Enabled] SATA Test Mode [Enabled] SATA Speed Support [Gen2] SATA ODD Port [No ODD] SATA MODE [AHCI Mode] Serial-ATA Port 0 [Enabled] SATA Port0 HotPlug [Disabled] SATA Port0 Fuction Select [CF] Serial-ATA Port 1 [Enabled] SATA Port1 HotPlug [Disabled] SATA Port1 Fuction Select [MSATA] SATA Port0 Not Present SATA Port1 Not Present	→←: Select Screen ↑ ↓: Select Item Enter: Select +/-: Change Opt F1: General Help F2: Previous Values F3: Optimized Defaults F4: Save&Exit ESC: Exit
Version 2.17.1249 Copyright (C) 2016 American Megatrends, Inc.	

SATA Port0～1 动态侦测主板上有没有接 SATA 设备，如果对应的 Port 上有接设备，则显示该 SATA 设备的型号。否则，显示 Not Present。

- **SATA Test Mode**

  SATA 控制器测试模式选择。

- **SATA Speed Support**

  SATA 控制接口速度 [GEN1/GEN2/GEN3]。

- **SATA ODD Port**

光盘驱动器接口选择。

- **SATA Mode**

SATA 控制器的类型选择，对应 IDE 和 AHCI 两个选择项。

注意，选择 AHCI 进行系统安装时，可能需要 Floppy 设备和特定芯片组对应的驱动。

- **Serial-ATA Port0～1**

SATA Port 接口的开关，设置为 Disabled，则对应的 SATA 接口不可用。

- **SATA Port0～1 HotPlug**

SATA 设备热插拔的开关，如果需要做热插拔，则对应的选项需设置为 Enabled。

- **SATA Port0～1 Fuction Select**

SATA 接口选择对应的接口模式。

➢ **Miscellaneous Configuration**

Aptio Setup Utility – Copyright (C) 2016 American Megatrends, Inc.	
Advanced	
Miscellaneous Configuration High Precision Timer [Enabled] Boot Timer with HPET Timer [Disabled] Pcie Express Dynamic Clock Gating [Disabled] OS Selection [Windows7]	→←: Select Screen ↑ ↓: Select Item Enter: Select +/-: Change Opt F1: General Help F2: Previous Values F3: Optimized Defaults F4: Save&Exit ESC: Exit
Version 2.17.1249 Copyright (C) 2016 American Megatrends, Inc.	

- **High Precision Timer**

高精度时间计时器选项[Enabled/Disabled]。

- **Boot Timer with HPET Timer**

  Bios 启动时使用高精度计时器。

- **Pcie Express Dynamic Clock Gating**

  该选项是控制 PCIE 禁止的选项，Eabled 后主板无法识别 PCIE 设备。

- **OS Selection**

  安装及使用操作系统时，此项需要设置正确。比如安装或使用 Windows 7，必须设置此项为 Windows 7，否则会出现安装系统蓝屏，安装好的系统不能引导等问题。

  注意，Android 选项仅供测试用，因为缺少相应的驱动，目前 Android 系统不能完全支持。

➢ **USB Configuration**

Aptio Setup Utility – Copyright (C) 2016 American Megatrends, Inc.	
Advanced	
USB Configuration USB Module Version 10 USB Devices: 1 keyboard , 1 Mice Legacy USB Support [Enabled] XHCI Hand-off [Enabled] EHCI Hand-off [Disabled] USB Mass Storge Driver Support [Enabled] USB hardware delays and time-outs: USB transfer time-out [20 sec] Device transfer time-out [20 sec] Device power-up delay [Auto]	→←: Select Screen ↑ ↓: Select Item Enter: Select +/-: Change Opt F1: General Help F2: Previous Values F3: Optimized Defaults F4: Save&Exit ESC: Exit
Version 2.17.1249 Copyright (C) 2016 American Megatrends, Inc.	

- **Legacy USB Support**

  此选项用于支持传统的 USB 设备（键盘，鼠标，存储设备等），当该项设为 Enabled 时，即使不支持 USB 的操作系统如 DOS 下也能使用 USB 设备。当设置成 Disabled 时，传统设备在不支持 USB 的操作系统中将不可用。

  注意，EFI application 下 USB 仍然可用，如 Shell 下。

- **XHCI Hand-off**

  此项用于当操作系统无 USB 3.0 驱动的话，enabled 该项会使系统能切换到 BIOS XHCI。

- **EHCI Hand-off**

  此项用于当操作系统无USB 2.0驱动的话，enabled该项会使系统能切换到 BIOS EHCI。

- **USB Mass Storage Drive Support**

  USB 大容量 USB 的支持选项。默认选择 ENABLED。

- **USB transfer time-out**

  USB 传输暂停，默认20S[1/5/10/20]。

- **Device reset time-out**

  设备复位暂停默认20S[10/20/30/40]。

- **Device power-up delay**

  设备加点延迟[AUTO/MANUAL]。

◆ Chipset

Aptio Setup Utility – Copyright (C) 2016 American Megatrends, Inc.	
Main Advanced **Chipset** Security Boot Save & Exit	
► North Bridge ► South Bridge	→←: Select Screen ↑ ↓: Select Item Enter: Select +/-: Change Opt F1: General Help F2: Previous Values F3: Optimized Defaults F4: Save&Exit ESC: Exit
Version 2.17.1249 Copyright (C) 2016 American Megatrends, Inc.	

➢ North Bridge

Aptio Setup Utility – Copyright (C) 2016 American Megatrends, Inc.		
Main Advanced **Chipset** Security Boot Save & Exit		
► Intel IGD Configuration ► LCD Control Memory Information Total Memory Memory Slot0 Memory Slot0	 4096 MB (DDR3L) 4096 MB (DDR3L) Not Prensent	→←: Select Screen ↑ ↓: Select Item Enter: Select +/-: Change Opt F1: General Help F2: Previous Values F3: Optimized Defaults F4: Save&Exit ESC: Exit
Version 2.17.1249 Copyright (C) 2016 American Megatrends, Inc.		

显示当前系统安装内存的容量、内存类型等信息，为动态侦测信息。

- **Intel IGD Configuration**

Aptio Setup Utility – Copyright (C) 2016 American Megatrends, Inc.		
Main Advanced **Chipset** Security Boot Save & Exit		
GOP Configuration		
GOP Driver	[Enabled]	→←: Select Screen
		↑ ↓: Select Item
Intel IGD Configuration		Enter: Select
		+/-: Change Opt
Integrated Graphics Device	[Enabled]	F1: General Help
		F2: Previous Values
IGD Turbo Enable	[Enabled]	F3: Optimized Defaults
Primary Display	[IGD]	F4: Save&Exit
GFX Boost	[Disabled]	ESC: Exit
PAVC	[LITE Mode]	
DVMT Pre-Allocated	[64M]	
DVMT Total Gfx Mem	[256MB]	
Aperture Size	[256MB]	
GTT Size	[2MB]	
Version 2.17.1249 Copyright (C) 2016 American Megatrends, Inc.		

*** GOP Driver**

Win8 VBIOS 使用该选项

*** Integrated Graphics Device**

板载集成显示选项，如果要外接 PCI 显卡的话必须 Disabled 该选项，否则有冲突。

*** IGD Turbo Enable**

*** Primary Display**

设置主板板载主显是集显或者独显[Auto/IGD/PCIe/SG]

*** GFX Boost**

此项为显卡 GPU 睿频加速功能开关。

*** PAVC**

此项为音频、视频保护控制开关，启用此技术，音频、视频在整个传输和播放过程中均处于被保护状态。注意，如果播放蓝光光碟，此项必须启用。

*** DVMT Pre-Allocated**

此项用于设置 DVMT 5.0 预分配显存容量，即 IGD 独占显存容量大小。

*** DVMT Total Gfx Mem**

此项用于设置 IGD 设备可使用的总的显存容量大小。

*** Aperture Size**

AGP 显示卡临时借用的那部分内存的大小,默认值 256MB。目前的一般用不到不需要修改。

*** GTT Size**

显存大小

- **LCD Control**

Aptio Setup Utility – Copyright (C) 2016 American Megatrends, Inc.	
Main Advanced **Chipset** Security Boot Save & Exit	
LCD Control Primary IGFX Boot Display [VBIOS Default]	→←: Select Screen ↑ ↓: Select Item Enter: Select +/-: Change Opt F1: General Help F2: Previous Values F3: Optimized Defaults F4: Save&Exit ESC: Exit
Version 2.17.1249 Copyright (C) 2016 American Megatrends, Inc.	

*** Primary IGFX Boot Display**

选择显示设备[VBIOS Default/CRT/DVI/HDMI]。

➢ **South Bridge**

Aptio Setup Utility – Copyright (C) 2016 American Megatrends, Inc.	
Chipset	
▶ USB Configuration * Restore AC Power Loss [Last State]	→←: Select Screen ↑ ↓: Select Item Enter: Select +/-: Change Opt F1: General Help F2: Previous Values F3: Optimized Defaults F4: Save&Exit ESC: Exit
Version 2.17.1249 Copyright (C) 2016 American Megatrends, Inc.	

➢ **USB Configuration**

Aptio Setup Utility – Copyright (C) 2016 American Megatrends, Inc.		
Chipset		
USB Configuration		
XHCI Mode	[Enabled]	→←: Select Screen ↑ ↓: Select Item
USB 2.0(EHCI) Support	[Disabled]	Enter: Select
USB Per Port Control	[Enabled]	+/-: Change Opt
USB Port 0	[Enabled]	F1: General Help
USB Port 1	[Enabled]	F2: Previous Values
USB Port 2	[Enabled]	F3:Optimized Defaults
USB Port 3	[Enabled]	F4: Save&Exit ESC: Exit
Version 2.17.1249 Copyright (C) 2016 American Megatrends, Inc.		

- **XHCI Mode**

  用于设置 XHCI 控制器的操作模式，此项和 EHCI 互斥。

- **USB 2.0 (EHCI) Support**

  用于控制 USB EHCI(USB 2.0)功能，有一个 EHCI 控制器必须一直是 Enabled。

- **USB Per Port Control**

  按 Port 进行 USB 设备控制开关，启用之后 USB Port0～3 可单独设置为 Enabled 或 Disabled。

- **USB Port0～3**

  用于控制各个 USB 接口的功能，如果设置为 Disabled，则对应的 USB 接口不可用。

*** Restore AC Power Loss**

三个选项　POWER OFF：断 AC 电源后，插入不开机。

POWER ON：　插 AC 电源就开机

Last　State：断 AC 电源前是什么状态，再插入就是什么状态

◆ Security

Aptio Setup Utility – Copyright (C) 2016 American Megatrends, Inc.	
Main Advanced Chipset **Security** Boot Save & Exit	
Password Description If ONLY the Administrator's password is set,then this only limits access to Setup and is only asked for when entering Setup.If ONLY the User's password is set, then this is a power on password and must be entered to boot or enter Setup. In Setup the User will have Administrator rights.The Password length must be in the following range: Minimum length　3 Maximum length　20 Administrator Password User Password	→←: Select Screen ↑ ↓: Select Item Enter: Select +/-: Change Opt F1: General Help F2: Previous Values F3: Optimized Defaults F4: Save&Exit ESC: Exit
Version 2.17.1249 Copyright (C) 2016 American Megatrends, Inc.	

➢ **Administrator Password**

此项用于设置管理员密码。

➢ **User Password**

此项用于设置普通用户密码。

◆ **Boot**

Aptio Setup Utility – Copyright (C) 2016 American Megatrends, Inc.	
Main Advanced Chipset Security **Boot** Save & Exit	
Boot Configuration Setup Prompt Timeout [6] Bootup NumLock State [On] Quiet Boot [Disabled] Fast Boot [Disabled] **Boot Option Priorities** Boot Option #1 [Built-in EFI Shell]	→←: Select Screen ↑ ↓: Select Item Enter: Select +/-: Change Opt F1: General Help F2: Previous Values F3: Optimized Defaults F4: Save&Exit ESC: Exit
Version 2.17.1249 Copyright (C) 2016 American Megatrends, Inc.	

➢ **Setup Prompt Timeout**

设置启动时屏幕提示等待时间。

➢ **Boot NumLock State**

开机时小键盘状态是否开启。

➢ **Quiet Boot**

Boot 模式选择开关，用于打开或关闭 Quiet Boot 功能。

➢ **Fast Boot**

➢ **Boot Option Priorities**

此项用于配置系统引导的优先次序。其中，#1 优先级最高，#n 优先级最低。

◆ **Save & Exit**

Aptio Setup Utility – Copyright (C) 2016 American Megatrends, Inc.	
Main Advanced Chipset Security Boot **Save & Exit**	
Save Changes and Exit Discard Changes and Exit	→←: Select Screen ↑ ↓: Select Item Enter: Select +/-: Change Opt F1: General Help F2: Previous Values F3: Optimized Defaults F4: Save&Exit ESC: Exit
Version 2.17.1249 Copyright (C) 2016 American Megatrends, Inc.	

➢ **Save Changes and Exit**

此项用于保存修改并退出 Setup 设置程序。如果所作修改需要重启才能生效，则会自动进行重启。

➢ **Discard Changes and Exit**

此项用于放弃所作修改并退出 Setup 设置程序。

7.4 x86 平台下UEFI所要管理的系统资源

这里的系统资源我们定义三种：I/O 端口地址，IRQ 中断号和 DMA 号。

◆ **DMA**

级别	功能
DMA0	未分配
DMA1	未分配
DMA2	未分配
DMA3	未分配
DMA4	用于 DMAC 的级联
DMA5	未分配
DMA6	未分配
DMA7	未分配

◆ **APIC**

高级可编程中断控制器。在现代 P4 以上级别的主板中，大都支持 APIC，可以提供多于 16 个中断源，如 IRQ16—IRQ23，部分主板如支持 PCI-X 的主板可以有多达 28 个中断源。但要启用该功能必须相应的操作系统支持。

◆ **IO端口地址**

X86 的 I/O 地址线只设计 16 条，从 0～0FFFFh，I/O 地址空间总共有 64K，在传统的 ISA 接口，只使用到前面的 1024 个（0000～03FFh），0400h 以上的端口为 PCI 接口与 EISA 接口所使用。每一外围设备都会占用一段 I/O 地址空间。下表给出了 X86 平台大致上所要用到的 I/O 接口列表。

地　址	设备描述
020h - 021h	可编程中断控制器
024h - 025h	可编程中断控制器
028h - 029h	可编程中断控制器
02Ch - 02Dh	可编程中断控制器
02Eh - 02Fh	主板资源
030h - 031h	可编程中断控制器
034h - 035h	可编程中断控制器
038h - 039h	可编程中断控制器
03Ch - 03Dh	可编程中断控制器

040h - 043h	系统计时器
4Eh - 4Fh	主板资源
050h - 053h	系统计时器
60h	PS/2 标准键盘
61h	系统 speaker
62h-63h	主板资源
65h-6fh	主板资源
070h - 077h	系统 CMOS/实时时钟
80h-8Fh	主板资源
92h	主板资源
A0h-A1h	可编程中断控制器
A4h-A5h	可编程中断控制器
A8h-A9h	可编程中断控制器
ACh-ADh	可编程中断控制器
B0h-B1h	可编程中断控制器
B4h-B5h	可编程中断控制器
B8h-B9h	可编程中断控制器
BCh-BDh	可编程中断控制器
170h-177h	ATA 通道 1
1F0h-1F7h	ATA 通道 0
2E8h - 2EFh	通信端口 4
2F8h - 2FFh	通信端口 2
376	ATA 通道 1
3E8h - 3EFh	通信端口 3
3F6h	ATA 通道 0
3F8h - 3FFh	通信端口 1
400h-47Fh	主板资源
4D0h - 4D1h	可编程中断控制器
500h-A1Fh	主板资源
A79h	ISAPNP Read Data Port
B20h- CDfh	主板资源
D00h - FFFFh	PCI Bus

◆ **IRQ中断分配表**

系统共 0 有 15 个中断源，有些已被系统设备独占。只有未被独占的中断才可分配给其它设备使用。ISA 设备要求独占使用中断；只有即插即用 ISA 设备才可由 UEFI 或操作系统分配中断。而多个 PCI 设备可共享同一中断，并由 UEFI 或操作系统分配。下表给出了 X86 平台部分设备的中断分配情况，但没有给出 PCI 设备所占用的中断资源。

级别	功能
IRQ0	系统计时器
IRQ1	标准 101/102 键或 Microsoft 键盘
IRQ2	保留
IRQ3	通信端口 2
IRQ4	通信端口 1
IRQ5	保留
IRQ6	保留
IRQ7	保留
IRQ8	系统 CMOS/实时时钟
IRQ9	Microsoft ACPI-Compliant System
IRQ10	通信端口 4
IRQ11	通信端口 3
IRQ12	PS/2 鼠标
IRQ13	保留
IRQ14	ATA 通道 0
IRQ15	ATA 通道 1

8. 驱动程序安装说明

本产品的驱动程序安装及主板详细信息请参考整机配套光盘，在此不做介绍。

9. 附录

9.1 BPI介绍

BPI(BIOS Programming Interface)是一种跨平台的，易维护的，支持 32 位操作系统保护模式下访问硬件的软件接口规范。BPI 是硬件和应用软件之间的纽带，其目的是为应用层提供平台无关的操作硬件的标准接口（以库函数的形式呈现，类似标准 C 的库函数），应用软件工程师无需关心主板具体的硬件实现方案。用户利用 BPI 库就可以快速开发出自己的软件产品，而且在主板硬件升级时，无需修改应用层软件，原来的软件就可在新的平台上正常运行。BPI 大大提高了产品的开发速度和降低产品的维护成本。BPI 架构如图 1 所示：

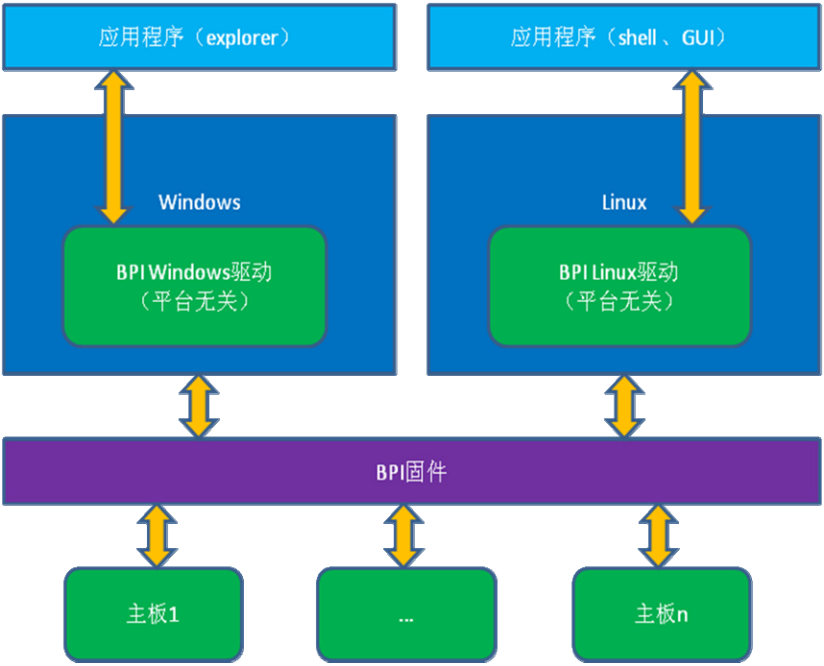

图 1 BPI 架构

1. BPI 支持功能

1) 看门狗

支持看门狗启动，停止及喂狗功能。

2) GPIO

支持 GPIO 输入输出编程。

3) 硬件监控

支持主板 CPU 温度，系统温度，风扇转速及主板核心电压侦测，如 CPU Core 电压，V12.0，电池电压等。

4) Flash 编程

主板上默认提供了一个 OEM Flash 空间，用于存储用户私有数据，如密钥，产品序列号等，大小可通过 BPI 库函数获取。

用户可以根据应用需求利用 BPI 库进行二次开发，例如：

a) 通过侦测 CPU 温度，如果温度过高，触发蜂鸣器报警。

b) 通过对 GPIO 编程来控制外设等。

2. BPI 的优点

1) 平台无关性

BPI 向应用层提供的接口，即 BPI 库函数是平台无关的，因此使用 BPI 库函数开发的软件，无需做任何修改，就可直接在支持 BPI 功能的新硬件平台上正常运行，具有良好的可移植性。

2) 安全性和可靠性高

访问硬件的 BPI 库函数由主板开发商编写，并经过严格测试，可避免因对系统硬件操作不当，造成系统异常问题。

3) 易维护

传统方式的 WDT 及 GPIO 编程与硬件密切相关，测试及调试复杂，且需要维护不同平台的软件，而使用 BPI 库开发的软件，只要维护一套软件即可。

4) 成本低

用户使用 BPI 开发应用程序，不会增加额外的硬件或软件成本。应用软件工程师利用 BPI 库函数可以很方便地进行二次开发，无需关注具体硬件的访问细节，可大大降低产品开发难度和缩短开发周期，帮助系统集成商产品快速上市。

9.2 EVOC一键还原操作说明

研祥一键还原功能支持多种文件系统（FAT32/NTFS/EXT2/EXT3/EXT4）分区格式的数据备份及还原，其备份方式的配置也是十分灵活的，可根据实际应用需求定义配置方案。下面仅对该功能默认配置进行操作说明。本功能支持PPC-1261V SERIES 整机上的备份还原键（“RCV”）操作。

一、说明：

1. 这里所描述的存储设备主要是 IDE/SATA 硬盘、CF 存储卡或 DOM 盘等研祥主板或整机所能支持的存储设备（暂不支持 USB 存储设备）。
2. 当整机中只有一个存储设备时，固定地把该存储设备上的第一个分区备份到最后一个分区，或固定地把该存储设备上的最后一个分区的备份镜像文件还原到第一个分区。
3. 整机可以最多支持四个存储设备同时存在，默认将其中一个存储设备为系统的主盘，最后一个存储设备作为系统的从盘。默认备份方式是将主盘的第一个分区的数据保存到从盘的最后一个分区。默认还原方式是把从盘最后一个分区的备份镜像还原到主盘的第一个分区。

   在 PPC-1261V SERIES 中，当同时存在 CF 存储卡和硬盘时，CF 存储卡默认作为整机的主盘，最后一个硬盘则是整机的从盘；当仅有两个硬盘时，第一个硬盘默认作为整机的主盘，最后一个硬盘则是整机的从盘。
4. 在 PPC-1261V SERIES 中，每个存储设备需要有两个分区，确保备份还原操作成功。
5. 备份盘分区的文件系统与还原盘的文件系统可以不相同，但两者均不能使用 FAT32/NTFS/EXT2/EXT3/EXT4 以外的文件系统。
6. 第一次还原时，必须确保有备份好的镜像文件（即此前须按上述规则备份数据），否则，还原动作无效。

二、操作步骤：

1. 开启或关闭研祥一键还原功能。

在开机画面起来后，按“Del”键进入 BIOS Setup 配置界面。

(1) 在 BIOS Setup 配置界面中找到 BOOT 项，配置 EVOC Backup 选项开启[Enable]或关闭[Disabled],来启用或关闭 EVOC 一键还原功能。此项功能默认是打开。

2. 进入系统备份还原界面。

当开启 EVOC 一键还原功能后，在主板开机时将在显示器上提示“Please Press button<RCV> for System Recovery within 3 Seconds!!”处，此时在 3 秒内按下整机背面的按键<RCV>，将进入系统还原备份界面。

3. 进行系统备份

进入系统备份还原界面，首先会进入到下面的界面，询问用户是否进行一键还原系统，并有一个 25 秒的读秒倒计时。如果第一次运行此功能，一定要先选择 一键备份系统 选项,选择后将自动进行第一备份操作。操作系统有以下显示:



A. 一键还原系统 Restore 此选项是自动还原上一次备份系统的镜像。

B. 一键备份系统 Backup 此选项是自动备份第一硬盘的第一份分区

C. 手动备份还原 Mannual 此选项是手动备份还原，此选项需要专业人士操作

D. 恢复出厂设置 Default 此选项是清除备份信息。

当数据备份或者还原操作完毕后，系统将会自动重启。

4、手动备份还原

一键还原的主界面如下，使用上下键选择可以进入手动备份还原功能，手动备份功能一般需要专业人士操作，否则可能造成数据的丢失和系统崩溃！



上面的界面选择手动备份还原后，回车进入如下界面：

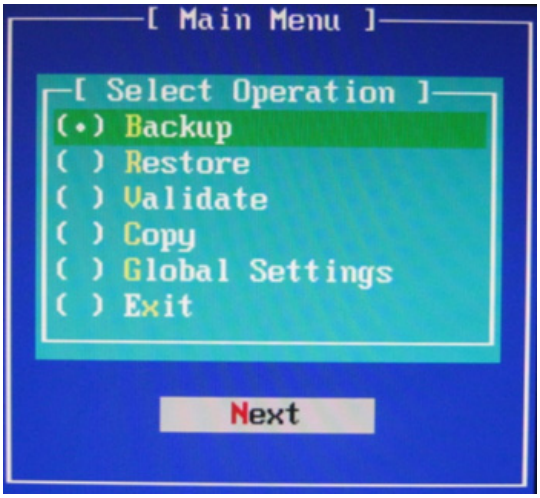

该界面下：如需备份选择 Bachup，如果已经备份需要还原那么选择 Restore，下面是备份的步骤，还原在之后讲到。

Backup 的过程，如下图示：

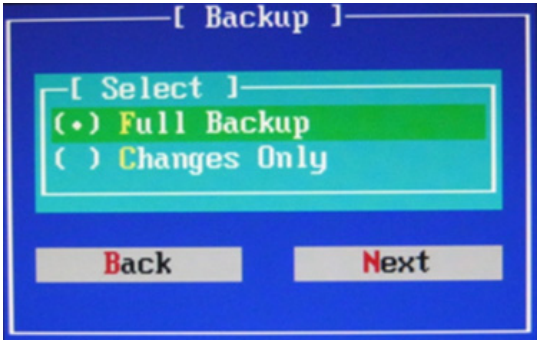

选择 Full Backup 后如下：



选择驱动接口默认为BIOS，回车后，选择要备份的设备：

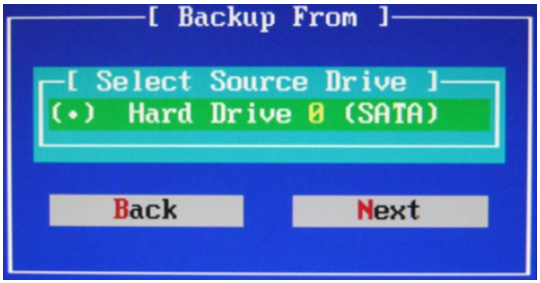

选择要备份的分区：

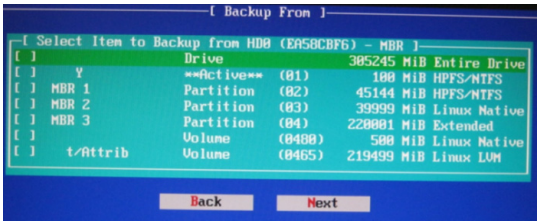

使用上下键移动，空格键进行选择，如下图示：

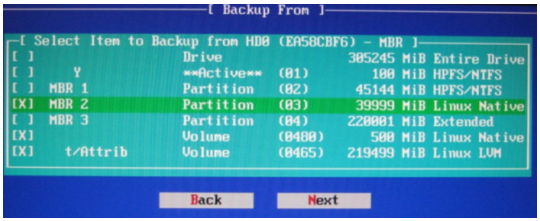

选择 Mutiple File Set，后回车

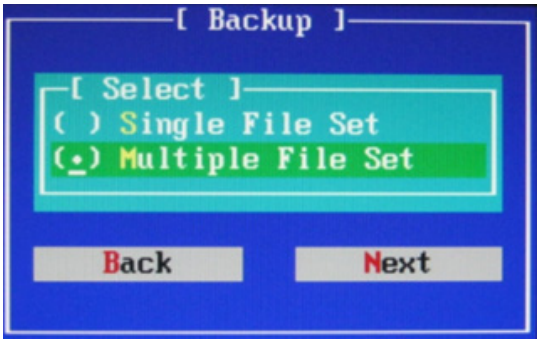

选择File （Direct）方式：

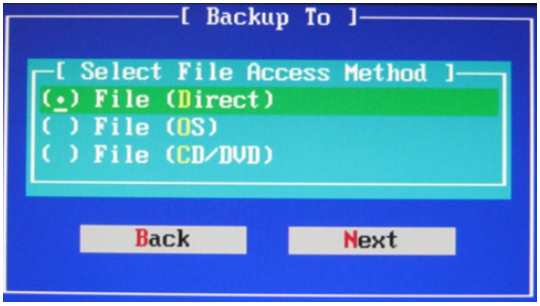

选择默认 Bios，如下图示：

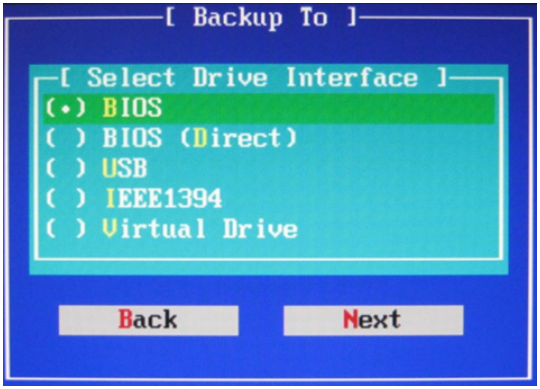

选择备份的目的地位置：

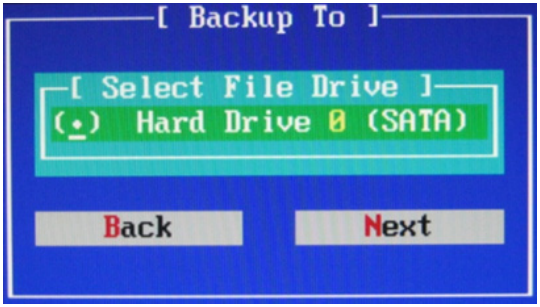

选择备份具体的分区：

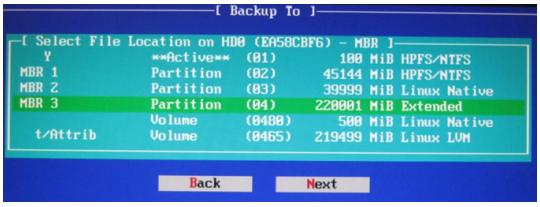

输入备份镜像的文件名，如下图示：

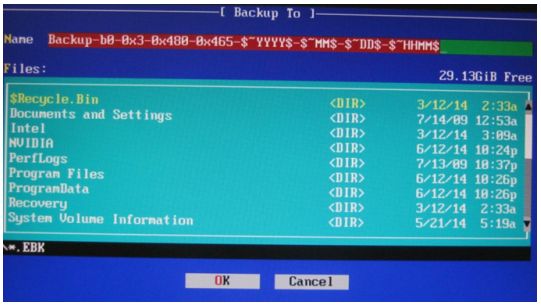

选择压缩的方式以及一些附加的信息，这里可以选择默认值，如下图示：

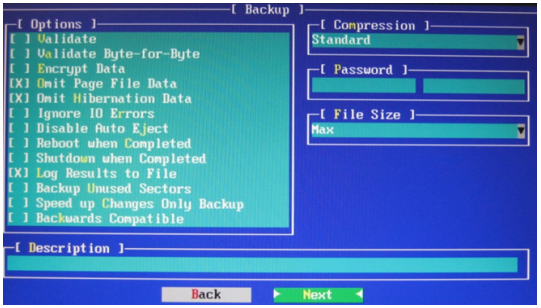

回车之后，显示备份的概要信息，如下图示：

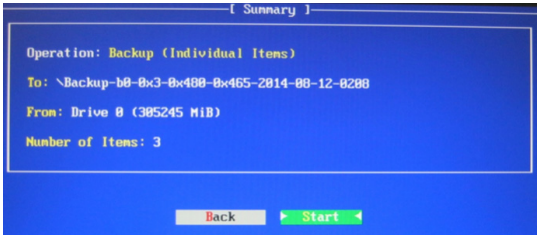

直接回车之后，启动备份：

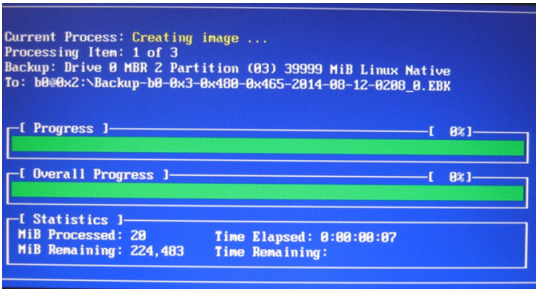

等待备份完成，时间长短视备份文件的大小而定。弹出如下提示，表示备份完成，如下图示：

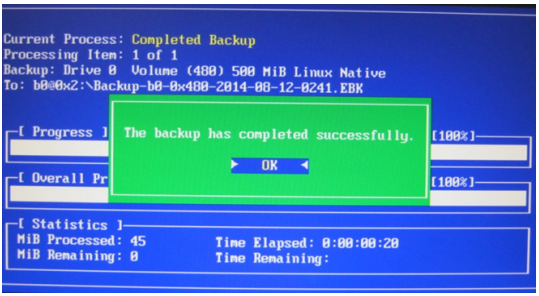

Restor （还原）的过程：

在主菜单中选择 Restore，如下图示：



回车之后，选择 Automatic 进行自动安装，如下图示：

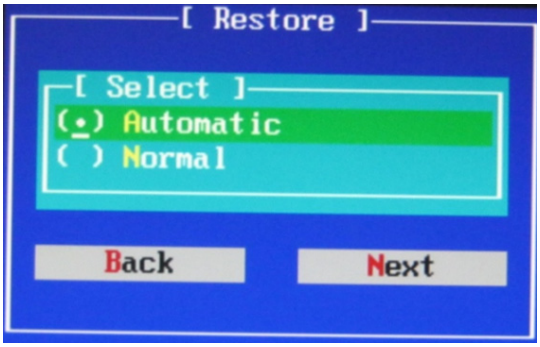

选择还原的方式，这里直接使用默认值 File（Direct），如下图示：

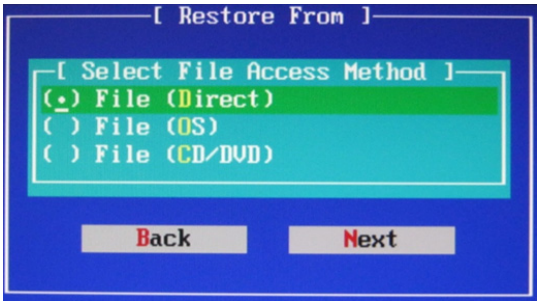

选择驱动接口，这里直接使用默认值 BIOS，如下图示：

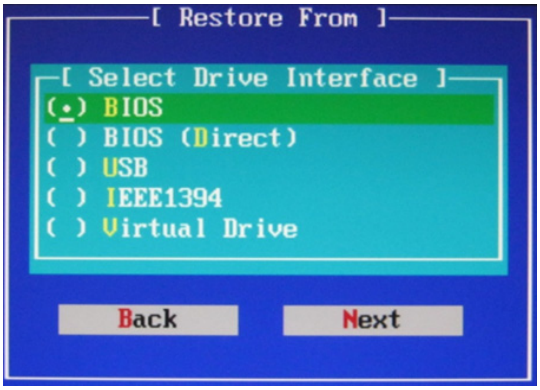

选择还原文件的位置，如下图示：

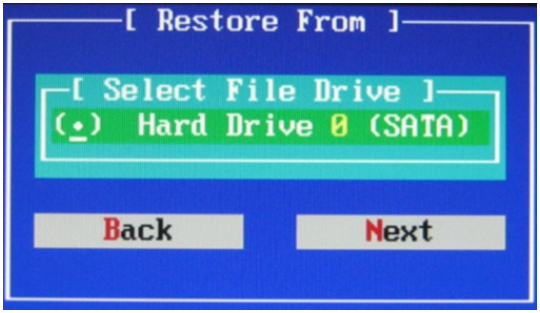

选择还原文件在分区中的位置，如下图示：

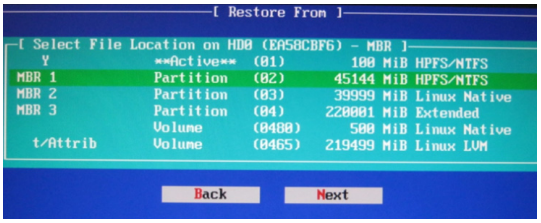

选择还原镜像的文件名：

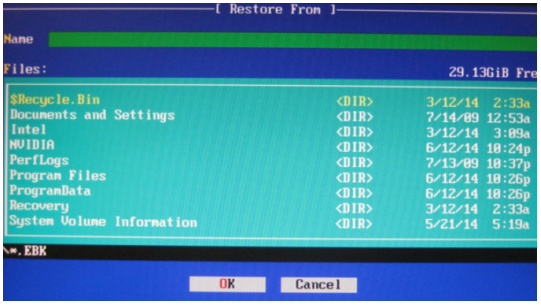

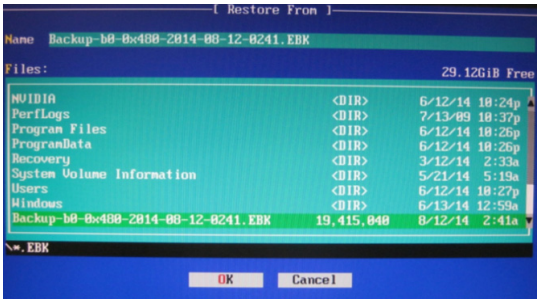

选择还原文件的目的地位置，如下图示：



警告信息，选择 YES 后回车，如下图示：

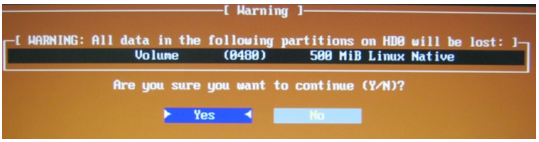

警告确认信息，选择 YES 后回车，如下图示：

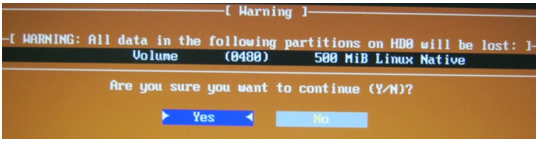

回车后，显示还原过程的概要信息，如下图示：

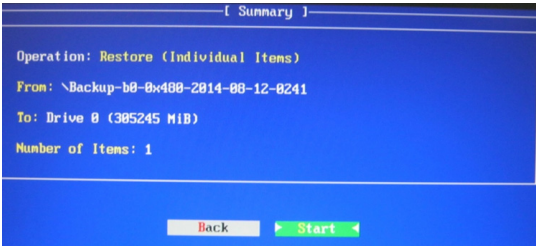

回车后，启动还原过程，如下图示：

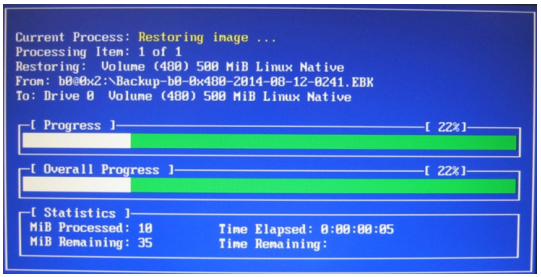

等待，弹出以下提示后，表示完成还原工作，如下图示：

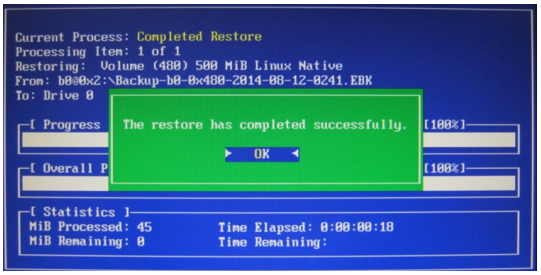

注意：

1） 完成率百分比有时候 1 分钟左右不动是正常的，系统在后台运行，请耐心等待。

2） 备份时间取决于系统盘的大小。

杀毒功能说明

我司 MBR 杀毒功能集成在 BIOS 中，不被其他软件（包括病毒）破坏，具有很好的防护性和安全性。下面是使用杀毒功能的说明。

1. 在开机阶段，按“Del”键进入 BIOS 配置界面；

2. 在 BIOS 配置界面中的 Security 菜单中有一项功能选项“Clear MBR Virus Function”；该选项中有三个选择子项：

a）Disabled:关闭清除 MBR 病毒功能；

b）Manual：检测到硬件系统存在 MBR 病毒时候会在 Post 阶段提示用户是否清除 MBR 病毒，选择“Y”清除病毒，选择“N”不清除病毒；

c）Quiet:检测到硬件系统存在病毒的时候自动清除病毒，没有任何提示信息。

9.3 常见故障分析与解决

常见故障	可能原因	故障解决方法
设备不能运行	无电源	请检查电源和电源线/连接器
	设备运行不符合指定的环境条件	1、检查环境条件 2、在开启冷天运输的设备之前请等待大约 12 小时。
外接显示器不亮	显示器未打开	打开显示器
	显示器处于“节电”模式	按键盘上的任意键
	亮度控件被设置为黑暗状态	通过亮度控件提高亮度。 有关详细信息，可参考显示器操作说明。
	未连接电源线或显示器电缆	1、检查电源线是否正确地连接到显示器和系统单元或接

		地出口。 2、检查显示器电缆是否正确地连接到系统单元和显示器。 3、如果执行这些检查后显示器屏幕仍不亮，请与技术支持联系。
PC 上的时间或日期不正确。	BIOS 设置不正确	根据开机画面提示的按键，打开 BIOS Setup，在 BIOS Setup 中调整时间和日期。
BIOS 设置正确，时间和日期不对。	备用电池电量不足	更换电池
USB 设备不响应	在 BIOS 中已禁用 USB 端口	使用不同的 USB 端口或启用该端口。
	连接了 USB 2.0 设备，但禁用了 USB 2.0。	启用 USB 2.0。
	操作系统不支持 USB 端口。	1、为鼠标和键盘启用 USB Legacy Support（支持传统 USB）。 2、对其它设备，需要有适合操作系统的 USB 驱动程序。

计算机未启动或显示 Boot device not found	在 BIOS 设置的启动优先级中，该启动设备不是第一优先级，或者未包括在启动设备中。	在 BIOS 设置的“启动”(Boot)菜单中更改该启动设备的启动优先级，或将该启动设备包括在启动优先级中。
开机提示找不到系统盘	硬盘电源线或数据线未接好	检查硬盘（硬盘必须是已经装好系统可引导的）的电源线、数据线是否插好。
	硬盘系统文件损坏	用可引导的光盘进入系统（常用 winpe 系统），检查硬盘系统是否已损坏，有必要时最好重新安装系统。
即插即用 I／O 卡设备，再次使用时检测不到或不能正常使用。	插槽接触不良	一般是由于 PCI 或 ISA 卡频繁的拔插、固定不稳、防尘措施不好等造成插槽接触不良所致，可反复拔插几次或者换个槽插。

Legal Information

Warnings

Please pay attention to the tips within the manual so as to avoid personal injury or property losses. The tips for personal injury are indicated in warning triangles while the tips only related to property losses have no warning triangles. The warning tips are listed as follows with the hazardous scale from severe to slight.

⚠ **Danger**
If handled carelessly, death or severe human injury will occur.

⚠ **Warning**
If handled carelessly, death or severe human injury might occur.

⚠ **Caution**
Warning triangle indicates that slight human injury might occur if handled carelessly.

Note
Unexpected result or status might occur, if not handled according to the tips.

Professional Personnel

The product/system covered by the manual can only be handled by qualified and professional personnel. During operation, please follow the respective instructive manuals, especially the safety warnings. The professional personnel have been trained and possess relevant experiences; therefore, he/she could be aware of the risks of the product/system and avoid possible damages.

EVOC Product

Please pay attention to the following instructions:

⚠ **Warning**
EVOC product can only be used according to the descriptions within the manual, including the contents and the relevant technical documents. If the products or components from other companies are required, please get the recommendation and grant from EVOC first. Proper transportation, storage, assembly, installation, debugging, operation and maintenance are prerequisite to ensure product safety and normal operation; therefore, please ensure permitted environment conditions and pay attention to the tips within the manual.

Copyright Notice

Information offered in this manual is believed to be correct at the time of printing, and is subject to change without prior notice in order to improve reliability, design and function and does not represent a commitment on the part of the manufacturer. In no event will the manufacturer be liable for direct, indirect, special, incidental, or consequential damages arising out of improper installation and/or use, or inability to use the product or documentation.

This user manual is protected by copyright. No part of this manual may be reproduced, stored in any retrieval system, or transmitted, in any form or by any means, mechanical, electronic, photocopied, recorded or otherwise, without the prior written permission from the manufacturer.

Trademarks

EVOC is a registered trademark of EVOC Intelligent Technology Co., Ltd. Other product names mentioned herein are used for identification purposes only and may be trademark and/or registered trademarks of their respective companies.

Warranty Terms:

The warranty on the product lasts for two year. If the user has additional requirements, the contract signed between the two sides shall prevail.

Please visit our website: http://www.evoc.com for more information,
or send an email to the Technical Support Mailbox support@evoc.com (International) or support@evoc.cn (Domestic) for consultation.

Hotline: 4008809666

About this manual

Scope of the Manual

The manual is appropriate for EVOC PPC-1261V SERIES.

Convention

The term “the PC” or “the Product” within the manual usually stands for EVOC PPC-1261V SERIES.

Instructions

Safety instructions

To avoid property losses or individual injury, please pay attention to the safety instructions within the manual. The warnings within the manual are marked with warning triangle , whose existence is dependent upon the scale of the potential hazard.

Contents

1. Product Introduction 1
1.1 Overview 1
1.2 Product Specifications 2
2. Application Scheme 7
2.1 Transportation 7
2.2 Storage 7
2.3 Opening the Box and Initial Examination 8
3. Installation Instructions 9
3.1 Mounting Method 9
3.1.1 19″ Rack Mount Installation 9
3.1.2 Embedded Panel Installation 10
3.1.3 VESA Standard Supporting Arm Mounting 11
3.2 Outer Appearance and Dimensions 12
3.3 Installation Dimensions 13
3.3.1 Installation Dimensions Drawing 13
3.3.2 Dimensions Drawing for Hole Drilling 13
4. PC Connection 14
4.1 Things to Know before Connection 14
4.2 Product Grounding 14
4.3 Connecting the Device to Power 15
5. Operating Instructions 16
5.1 Product Outline 16
5.2 External Control Ports 17
5.3 Port Definition 21
5.3.1 DC Power Input Connector 21
5.3.2 VGA Port 22
5.3.3 PS/2 Keyboard/Mouse Port 22
5.3.4 Network Port 23
5.3.5 USB Port 23

5.3.6 Standard DB9 COM Port....24
5.3.7 GPIO Port....27
5.3.8 LPT Port....28
5.4 Operation Control....29
6. Assembly and Maintenance....30
6.1 Overall Assembly Drawing....30
6.2 Installation/Removal of Motherboard....32
6.2.1 Removing the Expansion Cover....32
6.2.2 Removing the IO Front Panel....32
6.2.3 Removing the Head Sink....33
6.2.4 Removing the Motherboard....34
6.2.5 Installing the Motherboard....35
6.3 Installation/Removal of HDD....35
6.3.1 Removing the HDD Cover....35
6.3.2 Removing HDD Module....36
6.3.3 Removing the HDD....37
6.4 Installation/Removal of CF Card....37
6.4.1 Removing the Door Cover....37
6.4.2 Removing CF Card....38
6.5 Installation/Removal of SIM Card....39
7. BIOS Setup....41
7.1 UEFI Overview....41
7.2 UEFI Parameter Setup....41
7.3 Basic Function Setting for UEFI....42
7.4 System Resource Managed by UEFI under X86 Platform....61
8. Installing the Drivers....65
9. Appendix....66
9.1 BPI Overview....66
9.2 EVOC One-Button-Recovery Operating Instructions....68
9.3 Troubleshooting and Solutions....83

1. Product Introduction

1.1 Overview

PPC-1261V SERIES is a touchable industrial panel PC, which contains embedded Intel® Celeron J1900 (hereinafter referred to as Bay Trail platform) and Intel® Atom™ D525 processor (hereinafter referred to as Atom platform). Atom platform supports Linux, Windows XP, Windows XPE, Win7, WinCE, DOS operating systems, and Bay Trail platform supports WIN7, WIN8, LINUX.

The PC adopts Al-alloy material, simple structure, and motherboard+expansion board design solution for system architecture. Highly reliable connectors are used for connection among various modular boards, so as to ensure reliable operating environment, and excellent dust-proof, heat dissipation and anti-vibration performance.

Targeting device control and monitoring devices, PPC-1261V SERIES is mainly used for mechanical device control at industrial site, computer room monitoring, building surveillance equipment and power monitoring, etc.

1.2 Product Specifications

Item		Definition
Main Functional Index	**Microprocessor**	Onboard Intel® Celeron J1900、Atom™ D525
	Chipset	Intel® Atom™ D525+ICH8M Intel® Celeron J1900+Bay Trail
	Memory	Atom platform: 1 x 204Pin DDR3 SO-DIMM memory slot, supporting Un-buffered and NON-ECC. The single memory slot supports a maximum of 4GB memory capacity. (only 256M×16 mode) Bay Trail platform: 2 x 204Pin DDR3L SO-DIMM memory slot, supporting Un-buffered and NON-ECC. The single memory slot supports a maximum of 4GB memory capacity. The standard configuration is 4GB memory, 8GB optional. Note: (1) The memory capacity of the PC may vary with configurations, and actual configuration shall prevail. (2) When Bay Trail platform use single memory, had to be plugged DIMM1.
	Display	Atom platform: supports CRT+LVDS display; The VGA supports up to 2048×1536@60Hz; The LVDS supports single-channel 18bit LCD screen and supports up to 1366×768. Bay Trail platform: supports CRT/HDMI display; The VGA supports up to 2560×1600@60Hz; The DVI supports up to 1600×1200; The HDMI supports up to 1920×1200

	Network	2 x 10/100/1000Mbps LAN port; LAN1 supports Wake-On-LAN
	Expansion bus	2 x Mini PCIe slot; Mini PCIe2 can only be used for 3G wireless network card and mSATA HDD.
	LCD Features	● LCD: 12″TFT LED ● Resolution: 1024 x 768 ● Luminance: 350cd/m2 ● Contrast ratio: 800：1 ● Viewing angle (CR≥10) ● Horizontal: -70～70°; Vertical: -65～60° Note: The above data may vary with configurations, and actual configuration shall prevail.
	Touch Screen	● Connector type: USB type ● Type:5-wire resistive Note: (1) The touch screen can be used only after the driver has been installed and corrected. (2) When the touch screen is correcting, it is recommended to use 16 or above advanced mode to correct in the advanced position (as shown in the figure below). 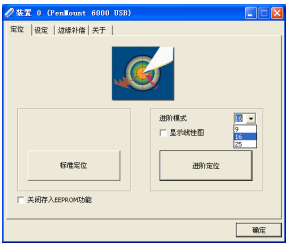

	External IO Ports	● The PC provides up to 6 COM ports as standard configuration. , COM1～6 support RS-232/ RS-422/ RS-485, RS-232 as default; Note: According to the different configuration，the number of COM port differ. ● The PC provides up to 5 USB2.0 ports as standard configuration. Note: According to the different configuration，the number of USB port differ. USB1 port of Bay Trail platform complete PC supports USB3.0 ● One 1×10 Phoenix terminal (8-channel GPIO) or one LPT (LPT supports SSP/EEP/ECP working modes and BIOS modification working mode); Note: GPIO and LPT are two alternative options, and cannot exist at same time. As for details, the actual configuration of the PC shall prevail. ● 1 x VGA port; ● 2 x LAN port (RJ45) ● 1 x PS/2 keyboard/mouse port; ● 1 x power input socket; ● 1 x RCV port (One-button-recovery; please refer to EVOC One-button-recovery Operating Instructions)

Main Performance Index	**Dimensions**	320mm (L) x 242mm (W) x 70mm (H)
	Weight	4Kg (PPC-1261V-11) 3.95Kg (PPC-1261V-12)
	Temperature	● Operating temperature: Atom platform: 0℃～45℃ (for the model with hard drive) -10℃～55℃ (for the model with SSD) Bay Trail platform: 0℃～+40℃ (Mechanical HDD) －30℃～+65℃ (CF card, SSD) ● Storage temperature: -40 ℃～80 ℃
	Humidity	5%～95%(temperature: +40℃)
	EMC	● GB 9254-2008 Radiation emission Class (A) ● GB 9254-2008 Conducted emission Class (A) ● GB/T 17626.2.2006 ESD Class (2) ● GB/T 17626.4-2006 Pulse group immunity Class (2) ● GB/T 17626.5-2008 Surge (impact) immunity Class (2) ● GB/T 17626.6-2008 Conduction immunity Class (2)
	Reliability	● MTBF≥10000h ● MTTR≤0.5h
	Safety	Meets basic requirements of GB4943-2011.

	Mechanical and Environmental Adaptability	● Anti-vibration in power-off status: 5-17Hz/1.0mm amplitude; 17-200Hz/1.0g, acceleration. ● Anti-shock: 10g acceleration, 11ms duration.
	Power Features	● Input voltage/frequency: 9-30VDC (direct input for the PC without V configuration) ; Input voltage/current: 19-30VDC (direct input for the PC with V configuration) ● Power consumption of the PC: Atom platform: 25W (standby status); 30W (operating MaxPower 100%). Bay Trail platform: 17.5W(standby status); 20.5W(operating Burnintest 100%).
	Operating systems	Atom platform: supports Linux, Windows XP, Windows XPE, Win7, WinCE, DOS Bay Trail platform: supports WIN7, WIN8, LINUX

2. Application Scheme

2.1 Transportation

Well-packaged products are suited for transportation by truck, ship, and plane. During transportation, products should not be put in open cabin or carriage. During transshipping, products should not be stored in open air without protection from the atmospheric conditions. Products should not be transported together with inflammable, explosive and corrosive substances and are not allowed to be exposed to rain, snow and liquid substances and mechanical force.

2.2 Storage

Products should be stored in package box when it is not used. And warehouse temperature should be 0°C ~ 40°C, and relative humidity should be 20% ~ 85%. In the warehouse, there should be no harmful gas, inflammable, explosive products, and corrosive chemical products, and strong mechanical vibration, shock and strong magnetic field interference. The package box should be at least 10cm above ground, and 50cm away from wall, thermal source, window and air inlet.

Caution!
Risk of destroying the device! **When shipping the PC in cold weather, please pay attention to the extreme temperature variation. Under this circumstance, please make sure no water drop (condensation) is formed on the surface or interior of the device. If condensation is formed on the device, please wait for over twelve hours before connecting the device.**

2.3 Opening the Box and Initial Examination

Opening the Box

Please pay attention to the following issues when opening the box:

- Do not discard the original packing material. Please keep the original packing material for re-transportation.
- Please keep the documentation at a safe place. The documentation, which is a part of the device, is required for initial device debugging.
- When doing the initial examination, please check whether there are distinct damages to the device caused during the transport.
- Please check whether the delivery contains the intact device and all of the independently ordered accessories. Please contact the customer service when any unconformity or transportation damages occur.

3. Installation Instructions

3.1 Mounting Method

■19″ Rack Mount □Desktop ■Embedded Panel

□Wall Mount ■VESA Standard Arm □Portable

□Others_____

3.1.1 19″ Rack Mount Installation

<table>
<tr><td>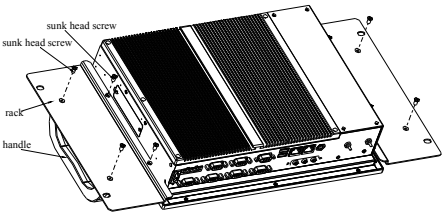
</td><td>Step 1: First use sunk head screw (M4×6) to fasten the handle onto the rack, then use pan head screws (M4×6) to fasten the rack onto the PC.</td></tr>
<tr><td rowspan="2"></td><td>Note: The handle, rack and screws are optional accessories of the PC.</td></tr>
<tr><td>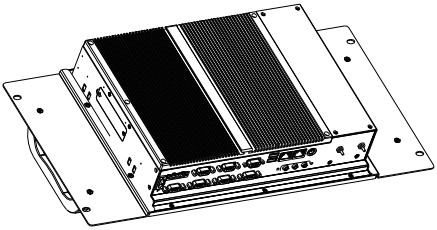</td><td>Step 2: Mount the PC onto the cabinet.</td></tr>
</table>

3.1.2 Embedded Panel Installation

<table>
<tr><td>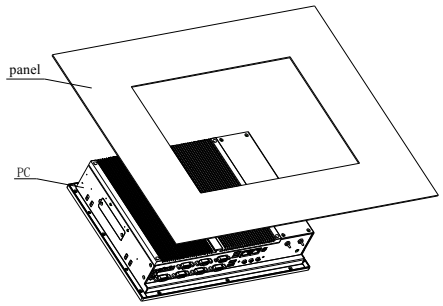
</td><td>Step 1: Place the PC into the panel, as shown in the left picture.</td></tr>
<tr><td rowspan="2">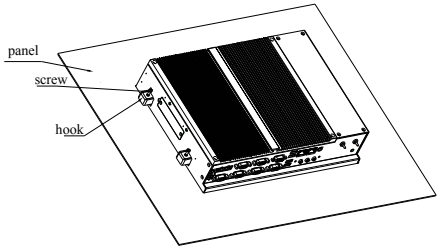
</td><td>Step 2: Place the hooks into the holes on the PC, as shown in the left picture. Then drive in M4×55 screws and press PC against the panel.
Carry out the same step as above for the other three hooks.</td></tr>
<tr><td>Note: the hooks and screws are accessories.</td></tr>
</table>

3.1.3 VESA Standard Supporting Arm Mounting

<table>
<tr><td rowspan="2">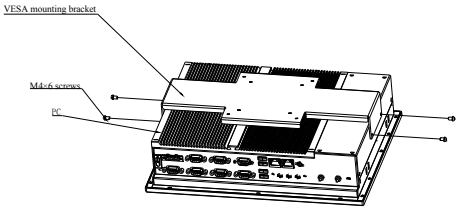
</td><td>Step: Use M4×6 screws to fix the VESA mounting bracket onto the PC, as shown in the left picture.</td></tr>
<tr><td>Note: VESA mounting bracket is an optional accessory.</td></tr>
<tr><td rowspan="2">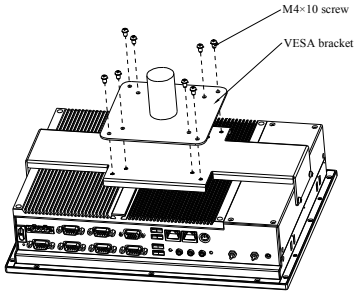
</td><td>Step: Use screws to fasten the PC onto the supporting arm, as shown in the left picture.</td></tr>
<tr><td>Note: The enclosed screws must be used for the installation, or the screws must be selected based on the requirements of user manual.</td></tr>
</table>

⚠ Warning
The weight bearing capacity of VESA arm shall be at least twice the weight of the PC.

3.2 Outer Appearance and Dimensions

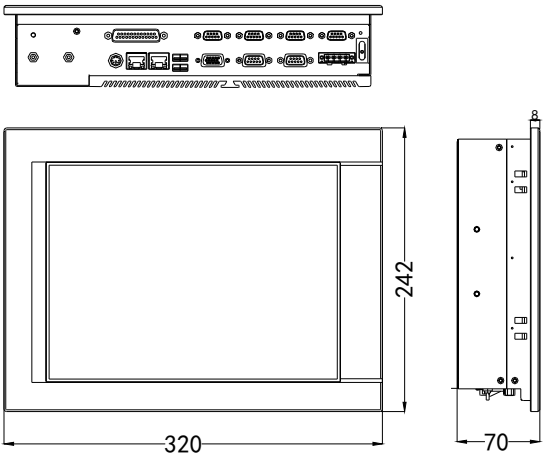

PPC-1261V-0501/0502/0503/0504/0507, PPC-1261-0301/0302

Unit: mm

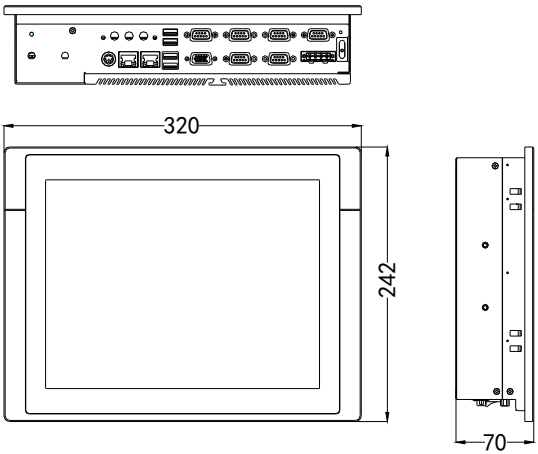

PPC-1261V-11/ PPC-1261V-12

Unit: mm

3.3 Installation Dimensions

3.3.1 Installation Dimensions Drawing

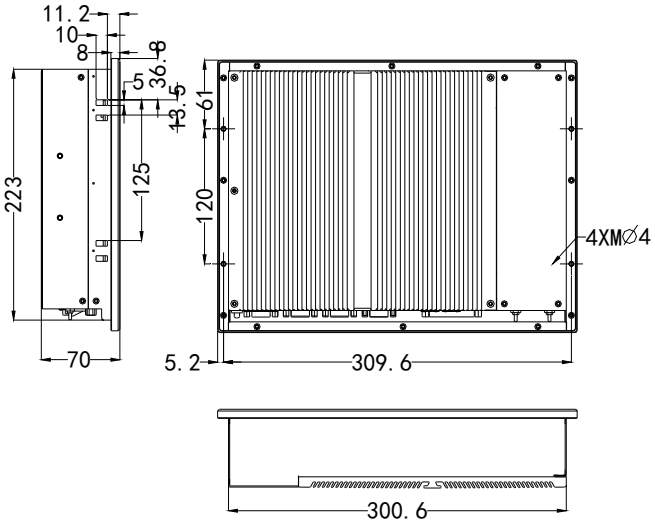

Unit: mm

3.3.2 Dimensions Drawing for Hole Drilling

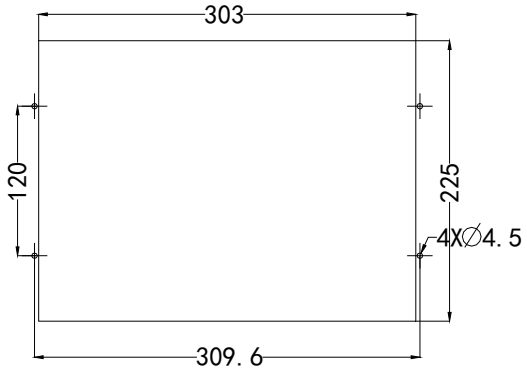

Unit: mm

4. PC Connection

4.1 Things to Know before Connection

⚠ Warning
The connected or built-in peripherals with opposite polarities are not allowed.

⚠ Warning
The device only operates when connecting with grounded power. No operation is allowed when the device power is ungrounded or only impedance is grounded.

⚠ Warning
Rated voltage of the device in use shall be in accord with power feature of the product.

Note:
Only the peripheral devices approved for industrial application can be used. When operating the PC, hot swappable IO modules (USB) can be used. The IO devices without hot swap function can only be connected when the PC is powered off.

4.2 Product Grounding

Ground Terminals	
The equipotential bonding terminal ① on the device (large surface or large area contact) shall be connected with the cabinet installed with the PC or the central grounding busbar on the device. The minimum cross section area of the cable shall be no less than 5mm^2.	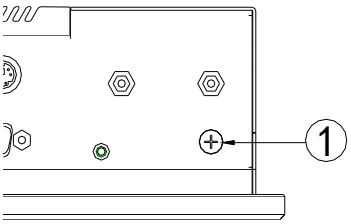

4.3 Connecting the Device to Power

Steps to connect the device to power:	
When inserting power cable, please make sure the power switch ② is at "0" (Off) position, so as to avoid accident startup of the PC.	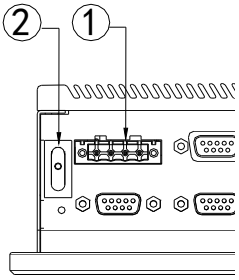
Connect the power cable to the socket ①, and press the power switch ② to power on the PC.	

⚠**Danger**
Disconnect the power source and data cable during a lightning storm.

Attention
The PC is completely isolated from the power supply only by disconnecting the power connector.

5. Operating Instructions

5.1 Product Outline

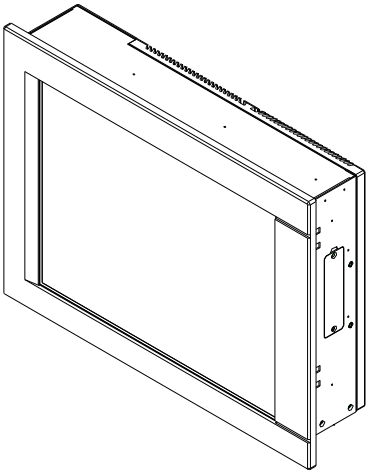

PPC-1261V-0501/0502/0503/0504/0507, PPC-1261-0301/0302

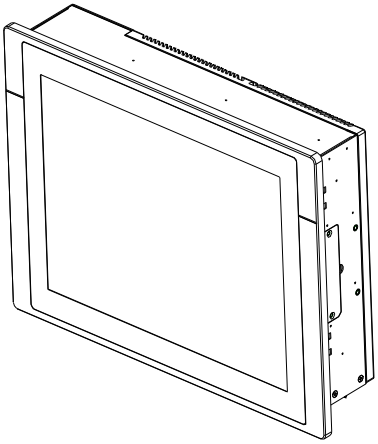

PPC-1261V-11/ PPC-1261V-12

5.2 External Control Ports

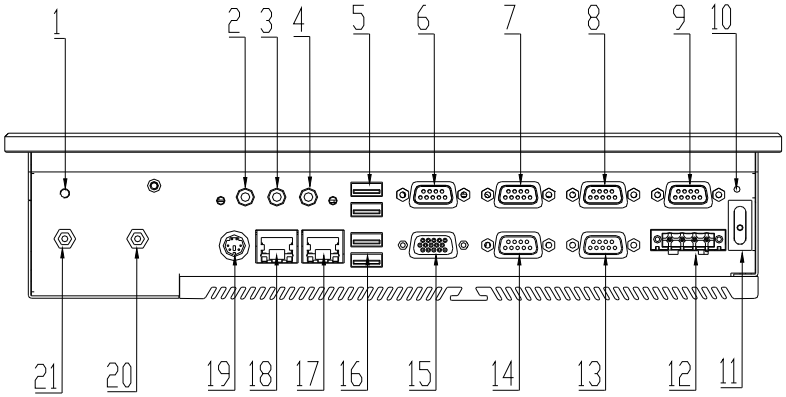

The picture for PPC-1261V-0502/0503, PPC-1261-0301 configuration

Item	Description	Item	Description	Item	Description
1	Ground screw	2	Audio output	3	Microphone
4	Audio input	5	USB3/4	6	COM3
7	COM4	8	COM5	9	COM6
10	One-button-recovery	11	Power switch	12	Power connector
13	COM2	14	COM1	15	VGA
16	USB1/2	17	LAN2	18	LAN1
19	Mouse/keyboard port	20	ANT2	21	ANT1

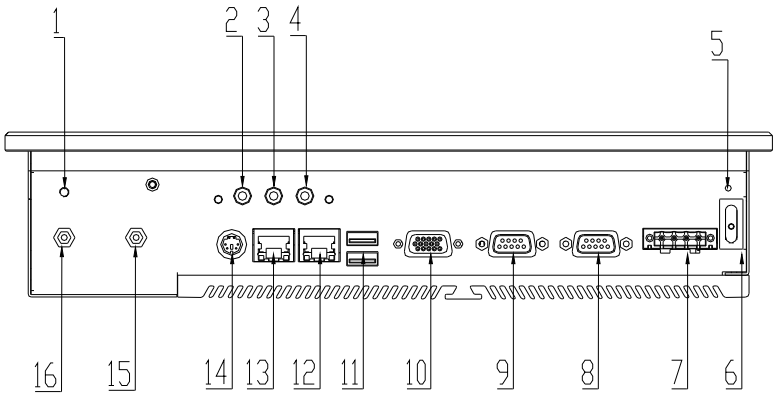

The picture for PPC-1261V-0504 configuration

Item	Description	Item	Description	Item	Description
1	Ground screw	2	Audio output	3	Microphone
4	Audio input	5	One-button-recovery	6	Power switch
7	Power connector	8	COM2	9	COM1
10	VGA	11	USB1/2	12	LAN2
13	LAN1	14	Mouse/keyboard port	15	ANT2
16	ANT1				

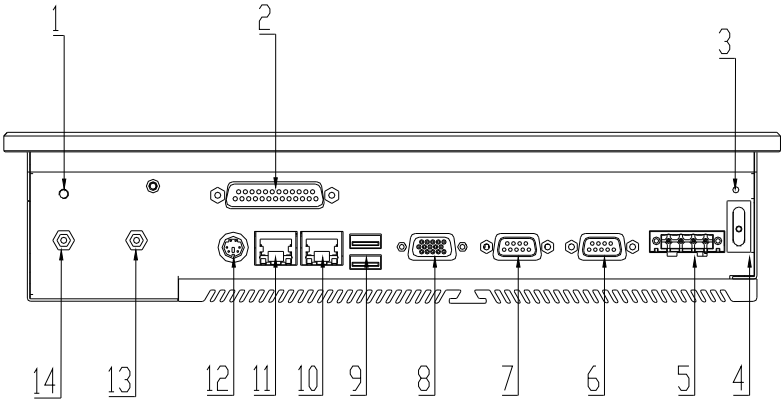

The picture for PPC-1261V-0501/ 0507, PPC-1261-0302 configuration

Item	Description	Item	Description	Item	Description
1	Ground screw	2	Parallel port	3	One-button-recovery
4	Power switch	5	Power connector	6	COM2
7	COM1	8	VGA	9	USB1/2
10	LAN2	11	LAN1	12	Mouse/keyboard port
13	ANT2	14	ANT1		

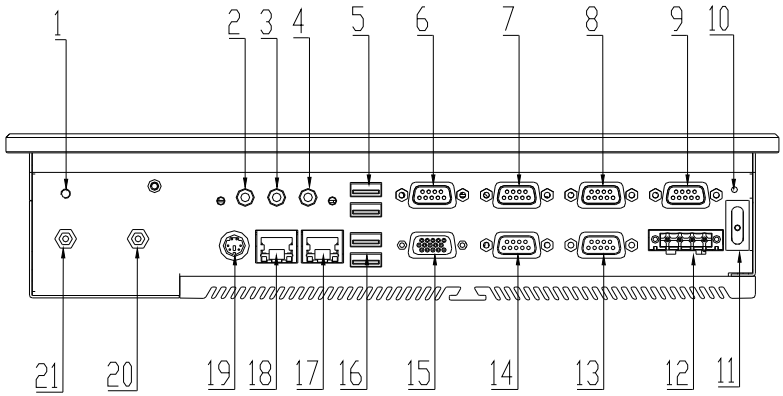

The picture for PPC-1261V-11 configuration

Item	Description	Item	Description	Item	Description
1	Ground screw	2	Audio output	3	Microphone
4	Audio input	5	USB3/4	6	COM3
7	COM4	8	COM5	9	COM6
10	One-button-recovery	11	Power switch	12	Power connector
13	COM2	14	COM1	15	VGA
16	USB1/2	17	LAN2	18	LAN1
19	Mouse/keyboard port	20	ANT2	21	ANT1

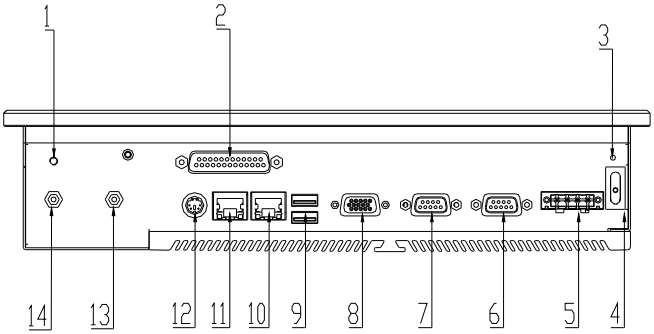

The picture for PPC-1261V-12 configuration

Item	Description	Item	Description	Item	Description
1	Ground screw	2	Parallel port	3	One-button-recovery
4	Power switch	5	Power connector	6	COM2
7	COM1	8	VGA	9	USB1/2
10	LAN2	11	LAN1	12	Mouse/keyboard port
13	ANT2	14	ANT1		

5.3 Port Definition

5.3.1 DC Power Input Connector

The product provides one 4P horizontal Phoenix terminal socket, which supports single power input, Its pin definition is as follows:



DC IN

Pin	Signal Name
1	Positive
2	Negative
3	SW-
4	SW+

Note: SW+, SW-: remote power-on/off input signal. Under ATX mode, triggering SW+ and SW- can power on/off the PC.

5.3.2 VGA Port

The product provides one standard DB15 VGA port. Its pin definition is as follows:

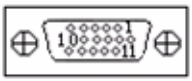

VGA

Pin	Signal Name	Pin	Signal Name
1	Red	2	Green
3	Blue	4	NC
5	GND	6	GND
7	GND	8	GND
9	NC	10	GND
11	NC	12	DDCDATA
13	HSYNC	14	VSYNC
15	DDCCLK		

5.3.3 PS/2 Keyboard/Mouse Port

The product provides one PS/2 keyboard/mouse port.

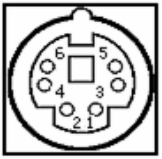

MS/KB

Pin	Signal Name
1	KB_DATA
2	MS_DATA
3	GND
4	+5V
5	KB_CLK
6	MS_CLK

5.3.4 Network Port

LAN1 and LAN2 are standard RJ45 connectors. They are 10/100/1000Mbps Ethernet ports on the motherboard. LILED and ACTLED are two LEDs on both sides of the Ethernet port, which respectively indicates network speed and network activity status. Please refer to the following for the status description of each LED:

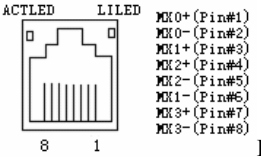

LAN1, LAN2

ACTLED (single color: green)	Network Activity		LILED (two colors: orange and green)	Network Speed
			Green	1000Mbps
Flash	Data being transmitted		Orange	100Mbps
Off	No data being transmitted		Off	10Mbps

Note: no matter the Gigabit LAN card contains Link signal or not, the ACTLED on the left always indicates the data transmission status. When data is being transmitted, the green LED on the left is “flashing”; when it is connected to network with no data transmission, the green LED is “off”; when there are broadcasting packages, it is normal if the ACTLED is “flashing”.

5.3.5 USB Port



USB2, USB3, USB4

Pin	Signal Name
1	+5V
2	USB_Data-
3	USB_Data+
4	GND

Note: USB5 is located inside the PC, and brought out by cables. It is a standard USB2.0 single-layer port, used for dongle or other devices. For its definition, please refer the the table above, it is not listed here.

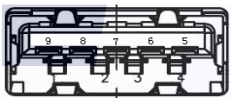

USB1

Pin	Signal Name
1	+5V_USB
2	USB_DATA-
3	USB_DATA+
4	GND
5	USB_SSRX-
6	USB_SSRX+
7	GND
8	USB_SSTX-
9	USB_SSTX+

Note: Only USB1 supports USB3.0 in Bay Trail platform.

5.3.6 Standard DB9 COM Port

The product provides up to six COM ports. COM1 ～ COM6 support RS-232/RS-422/RS-485 modes. Their pin definitions are as follows:

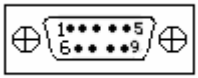

COM1～COM6

Pin	Signal Name		
	RS-232 (Default)	RS-422	RS-485
1	DCD#	TXN	DATA-
2	RXD	TXP	DATA+
3	TXD	RXP	NC
4	DTR#	RXN	NC
5	GND	GND	GND
6	DSR#	NC	NC
7	RTS#	NC	NC
8	CTS#	NC	NC
9	RI#	NC	NC

Note: COM port under the RS-485 mode, Advanced →Super IO Configuration, Serial Port 1 Configuration→COMA RS485 AUTO Flow Control are changed to Enabled in BIOS,COM1 can realize the automatic transmission; Serial Port 2 Configuration→COMB RS485 AUTO Flow Control is changed to Enabled , COM2 can realize the automatic transmission. In the other case, the data send/receive direction of COM1-COM6 is controlled by RTS.

COM1, COM2 for RS-232/RS-422/RS-485 Mode Selection Definition

JP1, JP2, JP3--COM1 mode selection; JP4, JP5, JP6--COM2 mode selection

	COM1	COM2	RS-232 (Default)	RS-422	RS-485
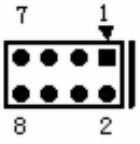 JP1, JP2, JP3 JP4, JP5, JP6	JP1	JP4	1-2	3-4	5-6, 7-8
	JP2	JP5	1-3	3-5	3-5
			2-4	4-6	4-6
	JP3	JP6	1-3	3-5	3-5
			2-4	4-6	4-6

COM3～COM6 for RS-232/RS-422/RS-485 Mode Selection Definition

JP7, JP8, JP9—COM3 mode selection; JP11, JP12, JP13—COM4 mode selection;

JP15, JP16, JP17—COM3 mode selection; JP19, JP20, JP21—COM4 mode selection.

	COM3	COM4	COM5	COM6	RS-232 (Default)	RS-422	RS-485
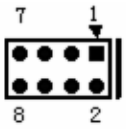 JP7, JP8, JP9 JP11, JP12, JP13 JP15, JP16, JP17 JP19, JP20, JP21	JP7	JP11	JP15	JP19	1-2	3-4	5-6, 7-8
	JP8	JP12	JP16	JP20	1-3	3-5	3-5
					2-4	4-6	4-6
	JP9	JP13	JP17	JP21	1-3	3-5	3-5
					2-4	4-6	4-6

Terminal matching mode selection:

If COM1～COM6 are under RS-485 mode, it is suggested that when the transmission distance is more than 300M, terminal matching mode setup should be carried out and 120Ω terminal resistor be connected. (note: the transmission distance is only a recommended value. As for the specific length, please make adjustment according to the signal quality in actual use.

JP2, JP3----COM1 terminal matching mode selection; JP5, JP6----COM2 terminal matching mode selection;

	Setup	Function
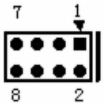 JP2/JP3 JP5/JP6	7-8 Short	Terminal resistance is connected
	7-8 Open	Terminal resistance is disconnected（Default）

JP10----COM3 terminal matching mode selection; JP14----COM5 terminal matching mode selection;

JP18----COM5 terminal matching mode selection; JP22----COM6 terminal matching mode selection;

	Setup	Function
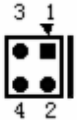 JP10, JP14 JP18, JP22	1-2, 3-4 Short	Terminal resistance is connected
	1-2, 3-4 Open	Terminal resistance is disconnected（Default）

5.3.7 GPIO Port

	Pin	Signal Name	Pin	Signal Name
 GPIO （pitch:3.81mm）	1	GPIO1	2	GPIO2
	3	GPIO3	4	GPIO4
	5	GPIO5	6	GPIO6
	7	GPIO7	8	GPIO8
	9	GND	10	VCC

Note: The factory default is high level, and input/output signal voltage range is 0-5V.

GPIO output status setup before BIOS initialization.

JP1(1-2)	GPIO OUT: H(Default)
JP1(2-3)	GPIO OUT: L

Note: GPIO1 is brought out via expansion board, and JP1 is on the expansion board.

5.3.8 LPT Port

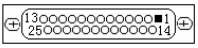

LPT1

Pin	Signal Name	Pin	Signal Name
1	STB#	14	AFD#
2	PD0	15	ERR#
3	PD1	16	INIT#
4	PD2	17	SLIN#
5	PD3	18	GND
6	PD4	19	GND
7	PD5	20	GND
8	PD6	21	GND
9	PD7	22	GND
10	ACK#	23	GND
11	BUSY	24	GND
12	PE	25	GND
13	SLCT	26	NC

5.4 Operation Control

⚠Warning
The On/Off button signal will not disconnect PC power supply!

⚠Caution		
When the PC executes hardware reset, data may be lost.		
Control Button	**Item**	**Description**
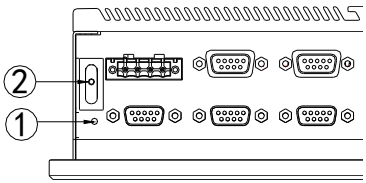	①	One-button-recovery button A pointed object or a clip can be used to press the button. By pressing this button, the PC will restore interface.
	②	Switch button The on/off button used to switch on/off the PC.

6. Assembly and Maintenance

6.1 Overall Assembly Drawing

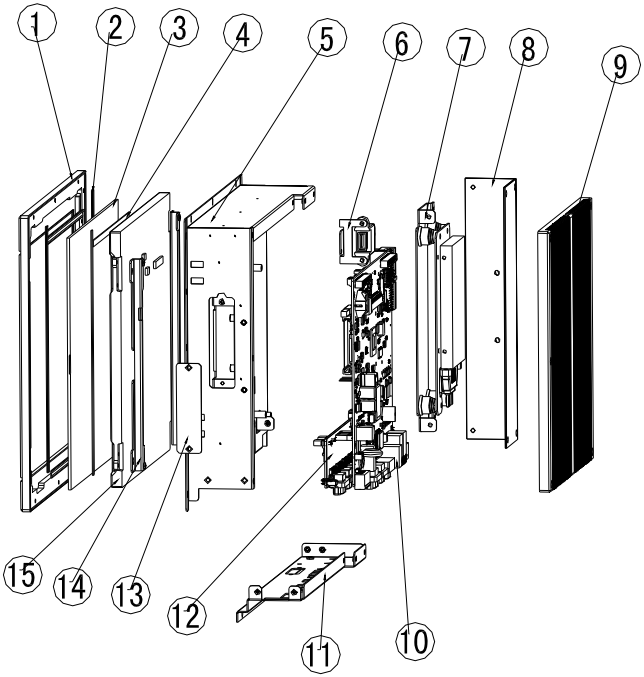

PPC-1261V-0501/0502/0503/0504/0507, PPC-1261-0301/0302

Item	Description	Item	Description	Item	Description
1	Screen bracket	2	Sealing strip	3	Touch screen
4	Shock-absorption foam	5	Chassis assembly	6	USB assembly
7	HDD assembly	8	HDD cover	9	Chassis cover
10	Motherboard	11	IO front panel	12	IO board
13	CF door cover	14	Screen bracket	15	LED screen

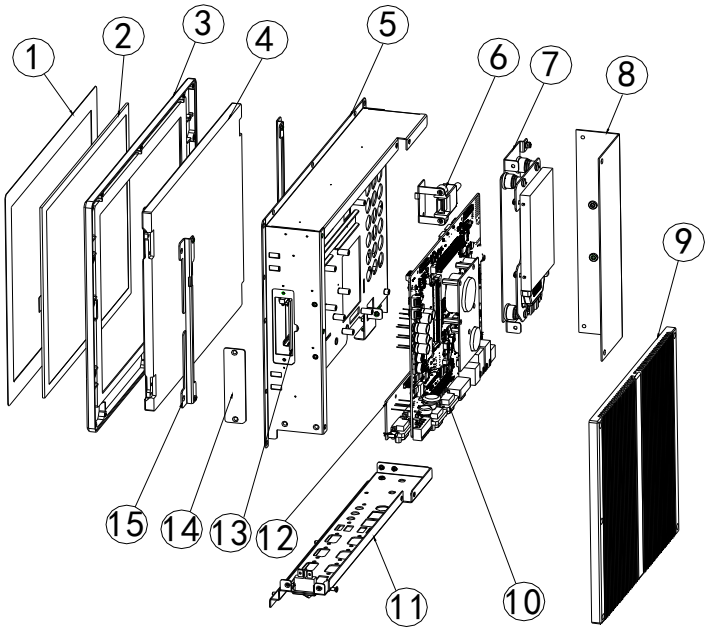

PPC-1261V-11/ PPC-1261V-12

Item	Description	Item	Description	Item	Description
1	mask	2	Touch screen	3	Aluminium alloy panel
4	LED screen	5	Chassis assembly	6	USB assembly
7	HDD assembly	8	HDD cover	9	Chassis cover
10	Motherboard	11	IO front panel	12	IO board
13	CFcard	14	CF door cover	15	Screen bracket

6.2 Installation/Removal of Motherboard

6.2.1 Removing the Expansion Cover

As shown in the picture below, first loosen the six sunk head screws fixing the HDD cover and five sunk head screws fixing the chassis cover, then lift the HDD cover and chassis cover upward to remove it.

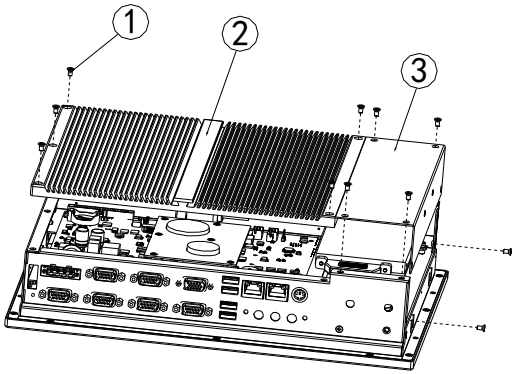

Item	Description	Item	Description
1	sunk head screw	2	Chassis cover
3	HDD cover		

6.2.2 Removing the IO Front Panel

As shown in the figure below, first loosen the seven M3 sunk head screws (three on the side, one at front, three at the bottom), then slightly move the IO front panel. When it gets loose, pull the IO front panel backward to remove it from the chassis.

Note: Before removing IO front panel, please remove the switch cable from the motherboard, and remove the hexagon studs on the VGA and COM ports from the front panel.

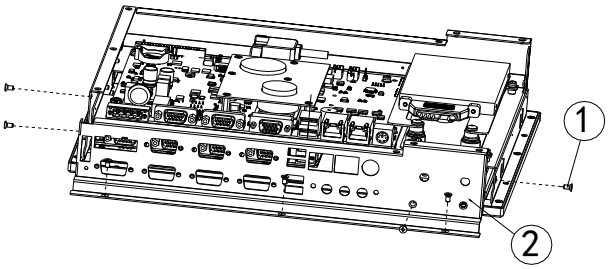

Item	Description	Item	Description
1	M3 sunk head screw	2	IO front panel

6.2.3 Removing the Head Sink

First loosen the six M3 sunk head screws on the heat sink, as shown in the figure below, then pull the block upward to remove it.

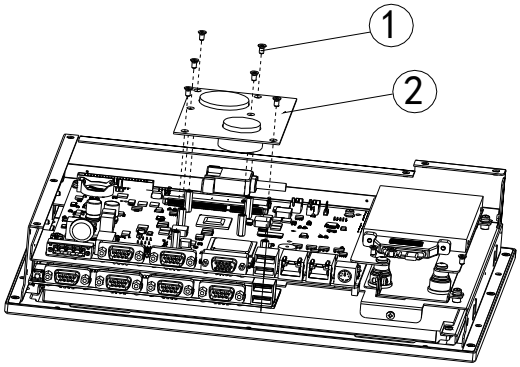

PPC-1261V-0501/0502/0503/0504/0507, PPC-1261-0301/0302

Item	Description	Item	Description
1	M3 sunk head screw	2	Head sink

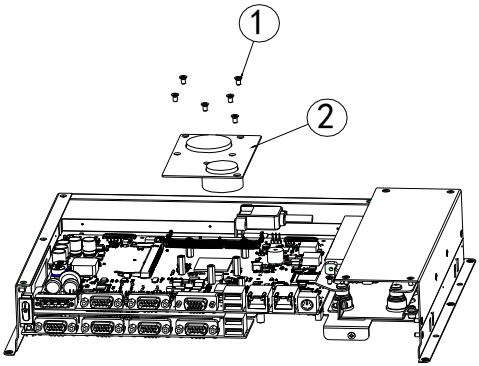

PPC-1261V-11/ PPC-1261V-12

Item	Description	Item	Description
1	M3 sunk head screw	2	Head sink

6.2.4 Removing the Motherboard

As shown in the figure below, loosen the four M3 combo screws with gasket and six hexagon copper studs, then raise the motherboard upward. When the pin headers get disconnected, pull out the screen cable, touch screen cable and HDD cable, and take the motherboard out of the chassis by upward direction.

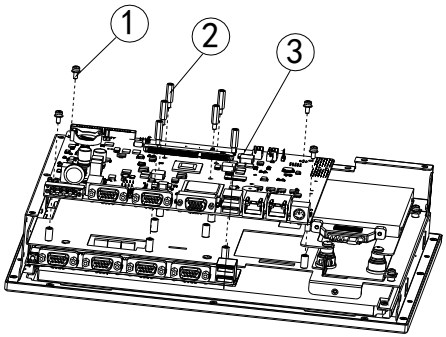

PPC-1261V-0501/0502/0503/0504/0507, PPC-1261-0301/0302

Item	Description	Item	Description
1	M3×8 pan head combo screw	2	Hexagon copper stud
3	Motherboard		

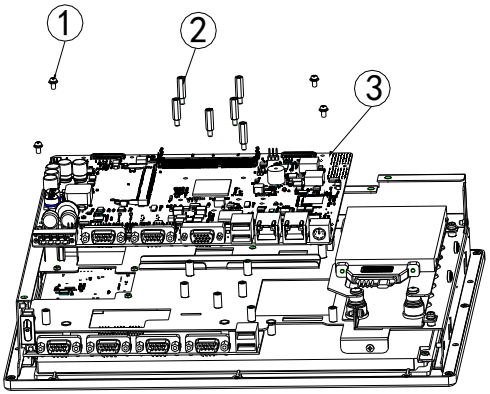

PPC-1261V-11/ PPC-1261V-12

Item	Description	Item	Description
1	M3×8 pan head combo screw	2	Hexagon copper stud
3	Motherboard		

6.2.5 Installing the Motherboard

As for the installation of motherboard, please refer to the steps in 6.2.1 to 6.2.4 and carry out the steps in reverse direction.

6.3 Installation/Removal of HDD

6.3.1 Removing the HDD Cover

As shown in the picture below, first loosen the four sunk head screws on the HDD cover, and lift it upward to remove it.

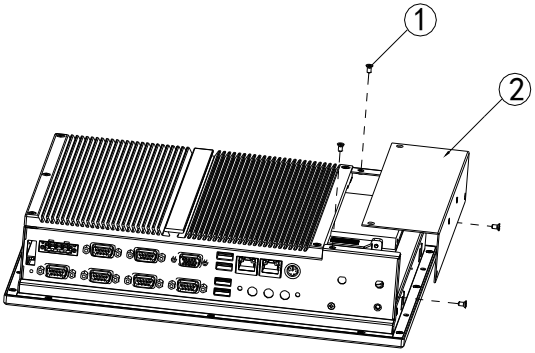

Item	Description	Item	Description
1	M3 sunk head screw	2	HDD cover

6.3.2 Removing HDD Module

As shown in the picture below, first loosen the four M3 panhead combo screws fixing the HDD module, then directly pull it out.

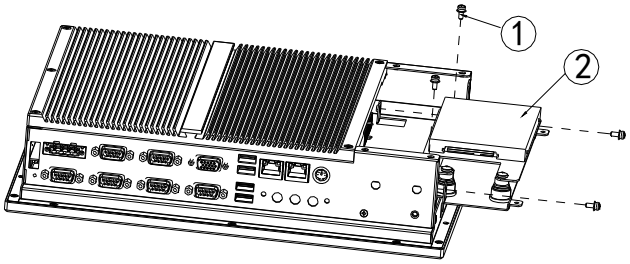

Item	Description	Item	Description
1	M3 pan head combo screw	2	HDD module

6.3.3 Removing the HDD

As shown in the figure below, loosen the four screws on the HDD module to replace the HDD.

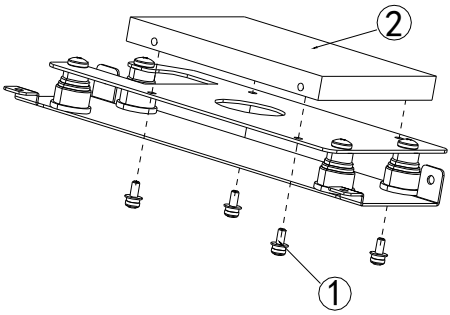

Item	Description	Item	Description
1	M3 pan head combo screw	2	HDD

After the HDD is installed, carry out the above-mentioned two steps in reverse direction to install the HDD module.

6.4 Installation/Removal of CF Card

6.4.1 Removing the Door Cover

As shown in the picture below, first loosen the two M3 sunk head screws on the door cover, then turn it outward and remove it in upward direction.

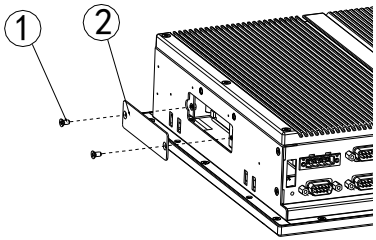

Item	Description	Item	Description
1	M3 sunk head screw	2	Door cover

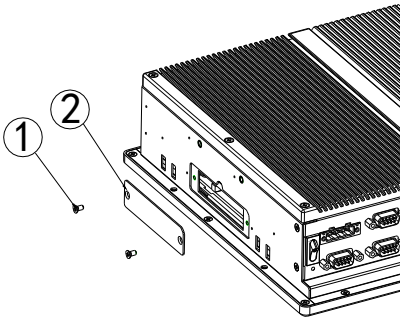

PPC-1261V-11/ PPC-1261V-12

Item	Description	Item	Description
1	M3 sunk head screw	2	Door cover

6.4.2 Removing CF Card

After removing expansion cover by the steps in 6.4.1, use fingers to press the push rod of the socket, as shown in the figure below. After CF card is ejected, use fingers to take the CF card out of the chassis.

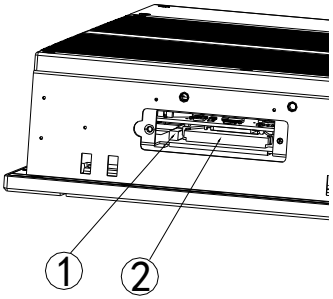

PPC-1261V-0501/0502/0503/0504/0507, PPC-1261-0301/0302

Item	Description	Item	Description
1	Push rod of CF card socket	2	CF card

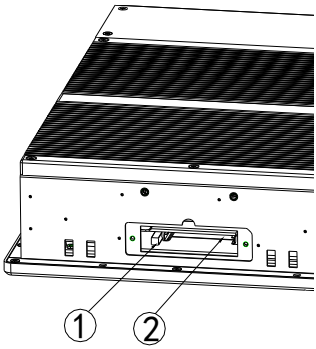

PPC-1261V-11/ PPC-1261V-12

Item	Description	Item	Description
1	Push rod of CF card socket	2	CF card

Note: When using CF card, please set the SATA Mode in IDE Configuration under Advanced menu in the CMOS Setup to IDE mode.

6.5 Installation/Removal of SIM Card

After removing the expansion cover by the steps in 6.2.1, reach out one finger to the middle of the opening, gently press the SIM card and draw back the finger immediately, then SIM card will eject automatically. Finally, use fingers to take the SIM card out of the chassis.

Note: If SIM card is not ejected out enough, you can press the SIM card into place, and press it for one more time to eject out the SIM card. Tweezers or other tools can also be used to take the SIM card out.

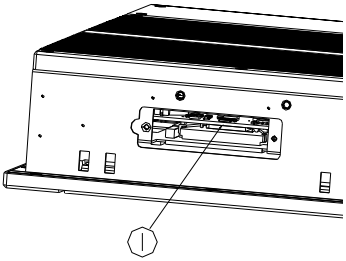

PPC-1261V-0501/0502/0503/0504/0507, PPC-1261-0301/0302

Item	Description
1	SIM card

After removing the screen assembly, reach out one finger to the middle of the opening, gently press the SIM card and draw back the finger immediately, then SIM card will eject automatically. Finally, use fingers to take the SIM card out of the chassis.

Note: If SIM card is not ejected out enough, you can press the SIM card into place, and press it for one more time to eject out the SIM card. Tweezers or other tools can also be used to take the SIM card out.

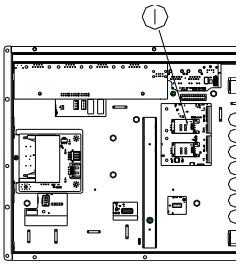

PPC-1261V-11/ PPC-1261V-12

Item	Description
1	SIM card

7. BIOS Setup

7.1 UEFI Overview

UEFI (Unified Extensible Firmware Interface) is the latest computer firmware to replace traditional BIOS. UEFI is solidified in the flash memory on the CPU board. Its main functions include: initialize system hardware, set the operating status of the system components, adjust the operating parameters of the system components, diagnose the functions of the system components and report failures, provide hardware operating and controlling interface for the upper level software system, guide operating system and so on. UEFI provides users with a human-computer interface in menu style to facilitate the configuration of system parameters for users, control power management mode and adjust the resource distribution of system device, etc.

Setting the parameters of the UEFI correctly could enable the system operating stably and reliably; it could also improve the overall performance of the system at the same time. Inadequate even incorrect UEFI parameter setting will decrease the system operating capability and make the system operating unstably even unable to operate normally.

7.2 UEFI Parameter Setup

Prompt message for UEFI setting may appear once powering on the system. At that time (invalid at other time), press the key specified in the prompt message (usually <Del> or < ESC >) to enter UEFI setting.

All the setup values modified by UEFI (excluding data and time) are saved in the flash storage in system; the contents will not be lost even if powered down or remove the battery of the board. The data and time are saved in CMOS storage, which is powered by battery; unless clearing CMOS is executed, its contents would not be lost even if powered off.

Note! UEFI setting will influence the computer performance directly. Setting parameter improperly will cause damage to the computer; it may even be unable to power on. Please use the internal default value of UEFI to restore the system.

Our company is constantly researching and updating UEFI, its setup interface may be a bit different. The figure below is for reference only; it may be different from your UEFI setting in use.

7.3 Basic Function Setting for UEFI

After starting SETUP program, the main interface of Aptio Setup Utility – Copyright (C) 2016 American Megatrends, Inc. will appear:

Aptio Setup Utility – Copyright (C) 2016 American Megatrends, Inc.	
Main Advanced Chipset Security Boot Save & Exit	
Motherboard Information Project Name ECS-1828 BIOS Name G9194005 x64 BIOS Version B00 Build Date 03/11/2014 15:50:22 Memory Information Total Memory 4096 MB (DDR3L) System Date [Mon 11/01/2009] System Time [00:47:55] Access Level Administrator	Set the Date. Use'Tab' to switch between Date elements. →←：Select Screen ↑↓：Select Item Enter：Select +/-：Change Opt F1：General Help F2：Previous Values F3：Optimized Defaults F4：Save&Exit ESC：Exit
Version 2.17.1249 Copyright (C) 2016 American Megatrends, Inc.	

◆ **Main**

➢ **System Date**

Choose this option and set the current date by < + > / < - >, which is displayed in format of month/date/year. Reasonable range for each option is: Month (1-12), Date (01-31), Year (Maximum to 2099), Week (Mon. ~ Sun.).

➢ **System Time**

Choose this option and set the current time by < + > / < - >, which is displayed in format of hour/minute/second. Reasonable range for each option is: Hour (00-23), Minute (00-59), Second (00-59).

◆ **Advanced**

Aptio Setup Utility – Copyright (C) 2016 American Megatrends, Inc.	
Main **Advanced** Chipset Security Boot Save & Exit	
▶ COM7-COM10 Configuration ▶ COM3-COM6 Configuration ▶ Super IO Configuration ▶ Hardware Monitor ▶ CPU Configuration ▶ PPM Configuration ▶ IDE Configuration ▶ Miscellaneous Configuration ▶ USB Configuration ▶ EVOC Features	→←：Select Screen ↑↓：Select Item Enter：Select +/-：Change Opt F1：General Help F2：Previous Values F3：Optimized Defaults F4：Save&Exit ESC：Exit
Version 2.17.1249 Copyright (C) 2016 American Megatrends, Inc.	

➢ **COM7-COM10 Configuration**

Aptio Setup Utility – Copyright (C) 2016 American Megatrends, Inc.	
Advanced	
COM7-COM10 Configuration ▶Serial Port 7 Configuration ▶Serial Port 8 Configuration ▶Serial Port 9 Configuration ▶Serial Port 10 Configuration	→←：Select Screen ↑↓：Select Item Enter：Select +/-：Change Opt F1：General Help F2：Previous Values F3：Optimized Defaults F4：Save&Exit ESC：Exit
Version 2.17.1249 Copyright (C) 2016 American Megatrends, Inc.	

- **Serial Port Configuration**

Aptio Setup Utility – Copyright (C) 2016 American Megatrends, Inc.	
Advanced	
Serial Port 7～10 Configuration Serial Port [Enabled] Device Settings IO=3F8h; IRQ=4;	→←：Select Screen ↑↓：Select Item Enter：Select +/-：Change Opt F1：General Help F2：Previous Values F3：Optimized Defaults F4：Save&Exit ESC：Exit
Version 2.17.1249 Copyright (C) 2016 American Megatrends, Inc.	

*** Serial Port7～10**

This option is used enable or disable the current COM port.

*** Device Settings**

This option is used to display the current resource configuration of the COM port.

- **COM3-COM6 Configuration**

Aptio Setup Utility – Copyright (C) 2016 American Megatrends, Inc.	
Advanced	
COM3-COM6 Configuration ►Serial Port 3 Configuration ►Serial Port 4 Configuration ►Serial Port 5 Configuration ►Serial Port 6 Configuration	→←：Select Screen ↑↓：Select Item Enter：Select +/-：Change Opt F1：General Help F2：Previous Values F3：Optimized Defaults F4：Save&Exit ESC：Exit
Version 2.17.1249 Copyright (C) 2016 American Megatrends, Inc.	

- **Serial Port Configuration**

Aptio Setup Utility – Copyright (C) 2016 American Megatrends, Inc.	
Advanced	
Serial Port 3～6 Configuration	→←：Select Screen
	↑↓：Select Item
Serial Port [Enabled]	Enter：Select
Device Settings IO=3F8h; IRQ=4;	+/-：Change Opt
Serial Mode [232]	F1：General Help
	F2：Previous Values
	F3：Optimized Defaults
	F4：Save&Exit
	ESC：Exit
Version 2.17.1249 Copyright (C) 2016 American Megatrends, Inc.	

*** Serial Port7～10**

This option is used enable or disable the current COM port.

*** Device Settings**

This option is used to display the current resource configuration of the COM port.

*** Serial Mode**

This option is used to select communication modes of the COM port: [232], [422] and [485]. If 422 or 485 mode is selected, there is also Uart RS485/422 Terminal option to select automatic flow control function. Select Enable Automatic Flow Control, however, in 232 mode, DISABLE must be select.

➢ **Super IO Configuration**

Aptio Setup Utility – Copyright (C) 2016 American Megatrends, Inc.	
Advanced	
Super IO Configuration ►Serial Port 1 Configuration ►Serial Port 2 Configuration ►Parallel Port Configuration	→←：Select Screen ↑↓：Select Item Enter：Select +/-：Change Opt F1：General Help F2：Previous Values F3：Optimized Defaults F4：Save&Exit ESC：Exit
Version 2.17.1249 Copyright (C) 2016 American Megatrends, Inc.	

● **Serial Port Configuration**

Aptio Setup Utility – Copyright (C) 2016 American Megatrends, Inc.	
Advanced	
Serial Port 1～2 Configuration Serial Port [Enabled] Device Settings IO=3F8h; IRQ=4;	→←：Select Screen ↑↓：Select Item Enter：Select +/-：Change Opt F1：General Help F2：Previous Values F3：Optimized Defaults F4：Save&Exit ESC：Exit
Version 2.17.1249 Copyright (C) 2016 American Megatrends, Inc.	

*** Serial Port7～10**

This option is used enable or disable the current COM port.

*** Device Settings**

This option is used to display the current resource configuration of the COM port.

*** UART RS485/422 Terminal [Disable]**

Select Enable Automatic Flow Control, however, in 232 mode, DISABLE must be select.

- **Hardware Monitor**

Aptio Setup Utility – Copyright (C) 2016 American Megatrends, Inc.	
Advanced	
PC Health Status	→←：Select Screen
	↑↓：Select Item
System temperature : +36 C	Enter：Select
CPU temperature : +43 C	+/-：Change Opt
	F1：General Help
Vcore : +0.848 V	F2：Previous Values
V3.3 : +3.328 V	F3：Optimized Defaults
V5.0 : +5.058 V	F4：Save&Exit
VBAT : +3.232 V	ESC：Exit
Version 2.17.1249 Copyright (C) 2016 American Megatrends, Inc.	

To display the voltage, temperature and other monitoring information detected about the hardware.

- **System temperature**

  Current system temperature, usually monitored by thermal resistor on the motherboard.

- **CPU temperature**

  Current CPU temperature.

- **Vcore**

  CPU core voltage.

- **V3.3/ V5.0**

  Swtich power output voltage.

- **VBAT**

  CMOS battery voltage.

➢ **CPU Configuration**

Aptio Setup Utility – Copyright (C) 2016 American Megatrends, Inc.	
Advanced	
CPU Configuration ►Socket 0 CPU Information ►**CPU Thermal Configuration** CPU Speed 2001 MHZ 64-bit Supported Limit CPUID Maximum [Disabled] Execute Disable Bit [Enabled] Intel Virtualization Tech [Enabled] Power Technology [Energy Efficient]	→←：Select Screen ↑↓：Select Item Enter：Select +/-：Change Opt F1：General Help F2：Previous Values F3：Optimized Defaults F4：Save&Exit ESC：Exit
Version 2.17.1249 Copyright (C) 2016 American Megatrends, Inc.	

To display information related to CPU. Please note that the Socket and Speed of CPU are related to the CPU installed. Different information will be display for different families or models of CPU.

- **Intel Virtualization Technology**

  Intel virtualization technology, which is needed when virtual PC or certain Linux

system is used.

- **Power Technology**

  To enable or disable power management function of CPU. Only when Customer is selected, EIST, Turbo Mode and other options will be displayed.

➢ **PPM Configuration**

Aptio Setup Utility – Copyright (C) 2016 American Megatrends, Inc.	
Advanced	
PPM Configuration ►Max CPU C-state [C7]	→←：Select Screen ↑↓：Select Item Enter：Select +/-：Change Opt F1：General Help F2：Previous Values F3：Optimized Defaults F4：Save&Exit ESC：Exit
Version 2.17.1249 Copyright (C) 2016 American Megatrends, Inc.	

- **Max CPU C-state**

  To select C state of CPU, C7 is most energy saving, and C1 is most power consuming, and so on.

➢ **IDE Configuration**

Aptio Setup Utility – Copyright (C) 2016 American Megatrends, Inc.	
Advanced	
IDE Configuration Serial-ATA (SATA) [Enabled] SATA Test Mode [Enabled] SATA Speed Support [Gen2] SATA 0DD Port [No ODD] SATA MODE [AHCI Mode] Serial-ATA Port 0 [Enabled] SATA Port0 HotPlug [Disabled] SATA Port0 Fuction Select [CF] Serial-ATA Port 1 [Enabled] SATA Port1 HotPlug [Disabled] SATA Port1 Fuction Select [MSATA] SATA Port0 Not Present SATA Port1 Not Present	→←：Select Screen ↑↓：Select Item Enter：Select +/-：Change Opt F1：General Help F2：Previous Values F3：Optimized Defaults F4：Save&Exit ESC：Exit
Version 2.17.1249 Copyright (C) 2016 American Megatrends, Inc.	

SATA Port0～1 dynamically detects whether SATA device is connected to the motherboard. If a device is connected to the corresponding Port, the model of the SATA device will be displayed, otherwise, it shows Not Present.

- **SATA Test Mode**

  SATA controller test mode selection.

- **SATA Speed Support**

  SATA control port speed [GEN1/GEN2/GEN3].

- **SATA ODD Port**

  Optical drive port selection.

- **SATA Mode**

  SATA controller type selection, corresponding to two options: IDE and AHCI.

  Please note that when AHCI is selected for system installation, drivers corresponding to Floppy device and specific chipset may be needed.

- **Serial-ATA Port0～1**

  Switch of SATA Port, when set to Disabled, the corresponding SATA port cannot be used.

- **SATA Port0～1 HotPlug**

  Switch of SATA device hotplug. If hot plug is needed, the corresponding option should be set to Enabled.

- **SATA Port0～1 Function Selection**

  SATA port selects corresponding port mode.

➢ **Miscellaneous Configuration**

Aptio Setup Utility – Copyright (C) 2016 American Megatrends, Inc.	
Advanced	
Miscellaneous Configuration High Precision Timer [Enabled] Boot Timer with HPET Timer [Disabled] Pcie Express Dynamic Clock Gating [Disabled] OS Selection [Windows7]	→←：Select Screen ↑↓：Select Item Enter：Select +/-：Change Opt F1：General Help F2：Previous Values F3：Optimized Defaults F4：Save&Exit ESC：Exit
Version 2.17.1249 Copyright (C) 2016 American Megatrends, Inc.	

- **High Precision Timer**

  High precision timer option [Enabled/Disabled].

- **Boot Timer with HPET Timer**

  High precision timer is used when Bios is booted up.

- **Pcie Express Dynamic Clock Gating**

  This option is used to control PCIE clock gating. When it is Enabled, the motherboard cannot identify PCIE device.

- **OS Selection**

  When operating system is installed and used, this option needs to be set correctly. For example, if Windows 7 is installed or used, this option must be set to Windows 7, otherwise blue screen would be occur when the system is installed, or the installed system cannot be booted.

  Note: Android option is only used for testing. Due to lack of corresponding driver, the current Android system is not fully supported.

➢ **USB Configuration**

Aptio Setup Utility – Copyright (C) 2016 American Megatrends, Inc.	
Advanced	
USB Configuration USB Module Version 10 USB Devices: 1 keyboard ， 1 Mice Legacy USB Support [Enabled] XHCI Hand-off [Enabled] EHCI Hand-off [Disabled] USB Mass Storge Driver Support [Enabled] USB hardware delays and time-outs: USB transfer time-out [20 sec] Device transfer time-out [20 sec] Device power-up delay [Auto]	→←：Select Screen ↑↓：Select Item Enter：Select +/-：Change Opt F1：General Help F2：Previous Values F3：Optimized Defaults F4：Save&Exit ESC：Exit
Version 2.17.1249 Copyright (C) 2016 American Megatrends, Inc.	

- **Legacy USB Support**

  This option is used to support legacy USB devices (keyboard, mouse, storage device, and etc.). When this option is set to Enabled, even under operating systems that do not support USB, such as DOS, USB device can still be used. When it is set to Disabled, legacy devices cannot be used in operating systems that do not support USB.

  Note: USB can still be used under EFI application, such as under Shell.

- **XHCI Hand-off**

  If this option is used for operating system that does not have USB3.0 driver, this option enabled means that the system will switch to BIOS XHCI.

- **EHCI Hand-off**

  If this option is used for operating system that does not have USB2.0 driver, this option enabled means that the system will switch to BIOS EHCI.

- **USB Mass Storage Drive Support**

  USB mass storage USB support option. It is ENABLED by default.

- **USB transfer time-out**

  USB transfer time-out is 20S[1/5/10/20] by default.

- **Device reset time-out**

  Device reset time-out is 20S[10/20/30/40] by default.

- **Device power-up delay**

  Device power-up delay [AUTO/MANUAL].

◆ **Chipset**

Aptio Setup Utility – Copyright (C) 2016 American Megatrends, Inc.	
Main Advanced **Chipset** Security Boot Save & Exit	
▶ North Bridge ▶ South Bridge	→←：Select Screen ↑↓：Select Item Enter：Select +/-：Change Opt F1：General Help F2：Previous Values F3：Optimized Defaults F4：Save&Exit ESC：Exit
Version 2.17.1249 Copyright (C) 2016 American Megatrends, Inc.	

➢ **North Bridge**

Aptio Setup Utility – Copyright (C) 2016 American Megatrends, Inc.		
Main Advanced **Chipset** Security Boot Save & Exit		
▶ Intel IGD Configuration ▶ LCD Control Memory Information Total Memory Memory Slot0 Memory Slot0	 4096 MB (DDR3L) 4096 MB (DDR3L) Not Prensent	→←：Select Screen ↑↓：Select Item Enter：Select +/-：Change Opt F1：General Help F2：Previous Values F3：Optimized Defaults F4：Save&Exit ESC：Exit
Version 2.17.1249 Copyright (C) 2016 American Megatrends, Inc.		

It displays the capacity of currently installed memory for the system, memory type, and other related information, which is dynamically detected information.

- **Intel IGD Configuration**

Aptio Setup Utility – Copyright (C) 2016 American Megatrends, Inc.		
Main Advanced **Chipset** Security Boot Save & Exit		
GOP Configuration		
GOP Driver	[Enabled]	→←：Select Screen
		↑↓：Select Item
Intel IGD Configuration		Enter：Select
		+/-：Change Opt
Integrated Graphics Device	[Enabled]	F1：General Help
		F2：Previous Values
IGD Turbo Enable	[Enabled]	F3：Optimized Defaults
Primary Display	[IGD]	F4：Save&Exit
GFX Boost	[Disabled]	ESC：Exit
PAVC	[LITE	
Mode]		
DVMT Pre-Allocated	[64M]	
DVMT Total Gfx Mem	[256MB]	
Aperture Size	[256MB]	
GTT Size	[2MB]	
Version 2.17.1249 Copyright (C) 2016 American Megatrends, Inc.		

*** GOP Driver**

This option is used for Win8 VBIOS

*** Integrated Graphics Device**

Onboard integrated graphics option. If external PCI graphics card needs to be connected, this option must be Disabled, otherwise there would be contradiction.

*** Primary Display**

Set the onboard primary display to integrated graphics card or discrete graphics car [Auto/IGD/PCIe/SG]

*** GFX Boost**

This option is a switch for graphics card GPU Turbo boost function.

*** PAVC**

This option is audio, video protection control switch. When this technology is enabled, the whole transmission and playing process of audio and video are protected. Please note that if Blu-ray disk is played, this option must be enabled.

*** DVMT Pre-Allocated**

This option is used to set DVMT 5.0 pre-allocated video card capacity, i.e., the capacity of IGD dedicated video memory.

*** DVMT Total Gfx Mem**

This option is used to set the total capacity of graphics memory used by IGD device.

*** Aperture Size**

To set the size of memory temporarily borrowed by AGP video card, 256MB by default. Currently, it does not need to be changed because it is not to be used.

*** GTT Size**

To set the size of video memory.

- **LCD Control**

Aptio Setup Utility – Copyright (C) 2016 American Megatrends, Inc.	
Main Advanced **Chipset** Security Boot Save & Exit	
LCD Control Primary IGFX Boot Display [VBIOS Default]	→←：Select Screen ↑↓：Select Item Enter：Select +/-：Change Opt F1：General Help F2：Previous Values F3：Optimized Defaults F4：Save&Exit ESC：Exit
Version 2.17.1249 Copyright (C) 2016 American Megatrends, Inc.	

*** Primary IGFX Boot Display**

Select display device [VBIOS Default/CRT/DVI/HDMI].

- **South Bridge**

Aptio Setup Utility – Copyright (C) 2016 American Megatrends, Inc.	
Chipset	
▶ USB Configuration * Restore AC Power Loss [Last State]	→←: Select Screen ↑↓: Select Item Enter: Select +/-: Change Opt F1: General Help F2: Previous Values F3: Optimized Defaults F4: Save&Exit ESC: Exit
Version 2.17.1249 Copyright (C) 2016 American Megatrends, Inc.	

- **USB Configuration**

Aptio Setup Utility – Copyright (C) 2016 American Megatrends, Inc.	
Chipset	
USB Configuration XHCI Mode [Enabled] USB 2.0(EHCI) Support [Disabled] USB Per Port Control [Enabled] USB Port 0 [Enabled] USB Port 1 [Enabled] USB Port 2 [Enabled] USB Port 3 [Enabled]	→←: Select Screen ↑↓: Select Item Enter: Select +/-: Change Opt F1: General Help F2: Previous Values F3: Optimized Defaults F4: Save&Exit ESC: Exit
Version 2.17.1249 Copyright (C) 2016 American Megatrends, Inc.	

- **XHCI Mode**

  Used to set operating mode of XHCI controller, which is contradictory to EHCI.

- **USB 2.0（EHCI）Support**

  Used to control function of USB EHCI(USB 2.0). One EHCI controller must be always Enabled.

- **USB Per Port Control**

  USB device control switch by each Port. When it is enabled, USB Port0～3 can be separately set to Enabled or Disabled.

- **USB Port0～3**

  Used to control functions of each USB port. If it is set to Disabled, the corresponding USB port cannot be used.

*** Restore AC Power Loss**

Three options: **POWER OFF: After AC power is disconnected, the PC will not be booted when connected to power supply.**

POWER ON: The PC is booted as soon as AC power is connected.

Last State：The PC restores to the same status before AC power is disconnected.

◆ **Security**

Aptio Setup Utility – Copyright (C) 2016 American Megatrends, Inc.	
Main Advanced Chipset **Security** Boot Save & Exit	
Password Description If ONLY the Administrator's password is set,then this only limits access to Setup and is only asked for when entering Setup.If ONLY the User's password is set, then this is a power on password and must be entered to boot or enter Setup. In Setup the User will have Administrator rights.The Password length must be in the following range: Minimum length 3 Maximum length 20 Administrator Password User Password	→←：Select Screen ↑↓：Select Item Enter：Select +/-：Change Opt F1：General Help F2：Previous Values F3：Optimized Defaults F4：Save&Exit ESC：Exit
Version 2.17.1249 Copyright (C) 2016 American Megatrends, Inc.	

➢ **Administrator Password**

This option is used to set administrator password.

➢ **User Password**

This option is used to set user password.

◆ **Boot**

Aptio Setup Utility – Copyright (C) 2016 American Megatrends, Inc.	
Main Advanced Chipset Security **Boot** Save & Exit	
Boot Configuration Setup Prompt Timeout [6] Bootup NumLock State [On] Quiet Boot [Disabled] Fast Boot [Disabled] **Boot Option Priorities** Boot Option #1 [Built-in EFI Shell]	→←：Select Screen ↑↓：Select Item Enter：Select +/-：Change Opt F1：General Help F2：Previous Values F3：Optimized Defaults F4：Save&Exit ESC：Exit
Version 2.17.1249 Copyright (C) 2016 American Megatrends, Inc.	

➢ **Setup Prompt Timeout**

To set prompt waiting time on the screen for boot-up.

➢ **Boot NumLock State**

To set whether the NumLock State is enabled during boot-up

➢ **Quiet Boot**

Boot mode selection switch, which is used to enable or disable Quiet Boot function.

➢ **Fast Boot**

➢ **Boot Option Priorities**

This option is used to configure the system booting priorities. #1 represents the highest priorities while #n represents the lowest priorities.

◆ **Save & Exit**

Aptio Setup Utility – Copyright (C) 2016 American Megatrends, Inc.	
Main Advanced Chipset Security Boot **Save & Exit**	
Save Changes and Exit Discard Changes and Exit	→←：Select Screen ↑↓：Select Item Enter：Select +/-：Change Opt F1：General Help F2：Previous Values F3：Optimized Defaults F4：Save&Exit ESC：Exit
Version 2.17.1249 Copyright (C) 2016 American Megatrends, Inc.	

➢ **Save Changes and Exit**

This option is used to save changes and exit Setup program. If reboot is needed for the changes to take effect, automatic reboot will be carried out.

➢ **Discard Changes and Exit**

This option is used to discard changes and exit Setup program.

7.4 System Resource Managed by UEFI under X86 Platform

We define three kinds of system resources here: I/O port address, IRQ interrupt number and DMA number.

◆ **DMA**

Level	Function
DMA0	Unassigned
DMA1	Unassigned
DMA2	Unassigned
DMA3	Unassigned
DMA4	Used for DMAC cascade
DMA5	Unassigned
DMA6	Unassigned
DMA7	Unassigned

◆ **APIC**

Advanced programmable interrupt controller. Most motherboards above P4 level support APIC and provide more than 16 interrupt sources, like IRQ16 - IRQ23; while some others can have up to 28 interrupt sources, such as motherboard supporting PCI-X. However, relevant OS are required to enable that function.

◆ **IO Port Address**

Only 16 IO address lines are designed for X86, from 0 ~ 0FFFFh; there is 64K for the system I/O address space. In traditional ISA connector, only the foregoing 1024 (0000 ~ 03FFh) are used while the ports above 0400h are used by PCI and EISA connectors. Each peripheral will occupy portion of the space. The table below shows the I/O connectors used in X86 platform.

Address	Device Description
020h - 021h	Programmable Interrupt Controller
024h - 025h	Programmable Interrupt Controller
028h - 029h	Programmable Interrupt Controller
02Ch – 02Dh	Programmable Interrupt Controller
02Eh – 02Fh	Motherboard resource
030h - 031h	Programmable Interrupt Controller
034h - 035h	Programmable Interrupt Controller
038h - 039h	Programmable Interrupt Controller

03Ch – 03Dh	Programmable Interrupt Controller
040h - 043h	System Timer
4Eh – 4Fh	Motherboard resource
050h – 053h	System Timer
60h	PS/2 standard keyboard
61h	System speaker
62h-63h	Motherboard resource
65h-6fh	Motherboard resource
070h - 077h	System CMOS/ Real Time Clock
80h-8Fh	Motherboard resource
92h	Motherboard resource
A0h-A1h	Programmable Interrupt Controller
A4h-A5h	Programmable Interrupt Controller
A8h-A9h	Programmable Interrupt Controller
ACh-ADh	Programmable Interrupt Controller
B0h-B1h	Programmable Interrupt Controller
B4h-B5h	Programmable Interrupt Controller
B8h-B9h	Programmable Interrupt Controller
BCh-BDh	Programmable Interrupt Controller
170h-177h	ATA Channel-1
1F0h-1F7h	ATA Channel-1
2E8h – 2EFh	COM4
2F8h – 2FFh	COM2
376	ATA Channel-1
3E8h – 3EFh	COM3
3F6h	ATA Channel-0
3F8h – 3FFh	COM1
400h-47Fh	Motherboard resource
4D0h – 4D1h	Programmable Interrupt Controller
500h-A1Fh	Motherboard resource
A79h	ISAPNP Read Data Port
B20h- CDfh	Motherboard resource
D00h – FFFFh	PCI Bus

◆ **IRQ Assignment Table**

There are 15 interrupt sources of the system. Some have been occupied by the system devices. Only the ones that are not occupied can be assigned to other devices. ISA device requests exclusive use of its interrupt. Only the plug and play ISA devices can be assigned by the UEFI or the OS. And several PCI devices can share one interrupt, which is assigned by UEFI or OS. Interrupt assignment of some devices of X86 platform is shown in the table below, but it does not show the interrupt source occupied by the PCI devices.

Level	Function
IRQ0	System Timer
IRQ1	Standard 101/102-key or Microsoft keyboard
IRQ2	Reserved
IRQ3	COM2
IRQ4	COM1
IRQ5	Reserved
IRQ6	Reserved
IRQ7	Reserved
IRQ8	System CMOS/ Real Time Clock
IRQ9	Microsoft ACPI-Compliant System
IRQ10	COM4
IRQ11	COM3
IRQ12	PS/2 mouse
IRQ13	Reserved
IRQ14	ATA Channel-0
IRQ15	ATA Channel-1

8. Installing the Drivers

Regarding the installation of the driver program and the detailed information of the motherboard, please refer to the enclosed CD of the PC.

9. Appendix

9.1 BPI Overview

EVOC BPI (BIOS Programming Interface) is a cross-platform, easy-to-maintain software interface specification, which supports access to hardware under the Protected Mode of the 32-bit operating system. As a link between hardware and software, the function of BPI is to provide a standard interface (in the form of library function, similar to library function of standard C) of platform-irrelevant operating hardware for the application layer, therefore, application software engineer does not need to worry about specific hardware solution for the motherboard. Users can rapidly develop their own software products by using BPI library, and when the hardware of the motherboard is upgraded, there is no need to modify the application software and the former software can operate on the new platform normally. It has greatly sped up the product development and reduced the maintenance cost. The BPI structure is shown in the Figure 1 below:

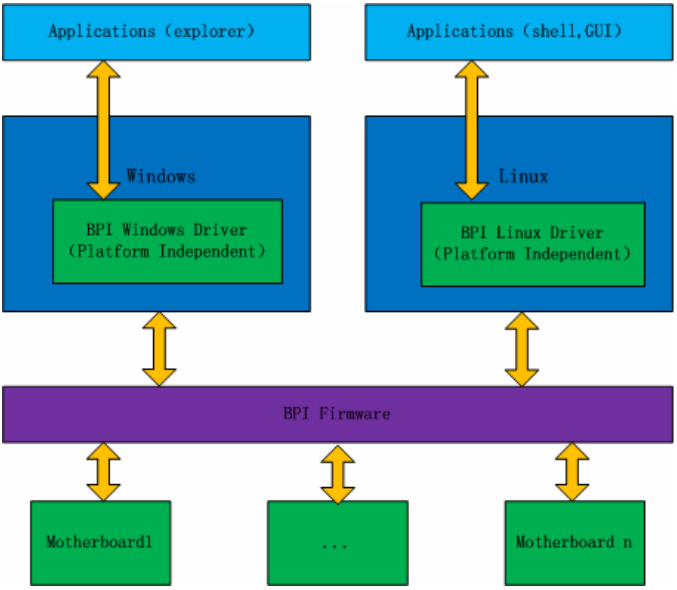

Figure 1 BPI Structure

1. Functions Supported by BPI

1) Watchdog

Supports Watchdog Startup, Stop and Feed Dog functions.

2) GPIO

Supports GPIO input/output programming.

3) Hardware monitoring

Supports monitoring of motherboard CPU temperature, system temperature, fan speed and motherboard core voltage detection, such as CPU Core voltage, V12.0, battery voltage, etc.

4) Flash programming

The motherboard provides one OEM Flash by default, which is used to store private data of users, such as key and product serial number. The size can be acquired by BPI library function.

Users can carry out second development by using BPI library based on application needs, for example:

a) Detecting CPU temperature. If temperature is too high, alarm buzzer will be triggered.

b) Peripheral device can be controlled by GPIO programming.

2. Advantages of BPI

1) Platform Irrelevant

The interfaces provided by BPI for application layer, i.e. BPI library function is irrelevant to platform, therefore the software developed by using BPI library function can operate on a new platform, supporting BPI function, normally

without making any modification.

2) Security and High Reliability

The BPI library function accessing the hardware is programmed by the motherboard developer and is strictly tested; therefore, it can avoid system malfunction caused by improper operation of the system hardware.

3) Easy Maintenance

Traditional WDT and GPIO programming are closely related to the hardware with complicated test and debug process and software of different platforms; however, the software developed by BPI only requires one set of the maintenance software.

4) Low Cost

Developing the applications by BPI will not result in additional hardware and software cost, but it will reduce the development difficulty, development cycle and time-to-market for the system integrator.

9.2 EVOC One-Button-Recovery Operating Instructions

EVOC one-key recovery functions supports to back up and recover the data in various file systems (FAT32/NTFS/EXT2/EXT3/EXT4). The backup configuration is quite flexible; please specify different configurations according to actual requirement. The following instructions only refer to the default settings. The function supports “RCV” button operation; the “RCV” button is configured on PPC-1261V SERIES.

A. Instructions

1. The storage devices described here only refer to the devices supported by EVOC boards or EVOC PCs, including IDE/SATA hard disks, CF cards and

DOM disks, (USB storage devices are currently unsupported).

2. When only one storage device is installed in PC, it will back up the data in the first partition of the storage device to the last partition, or recover the backup image files in the last partition of the storage device to the first partition.
3. The PC can supports up to four storage devices at the same time: one storage device is set as the prime system disk while the last storage device is set as the secondary system disk. The default backup mode is to save the data in the first partition of the primary disk in the last partition of the secondary disk; while the default recovery mode is to restore the backup image files in the last partition of the secondary disk to the first partition of the primary disk.

   When both CF card and hard disk are installed in PPC-1261V SERIES the CF card is set as the primary disk of the PC in default and the last hard disk is set as the secondary disk of the PC. When only two hard disks are installed in PPC-1261V SERIES, the first hard disk is set as the primary disk of the PC in default and the last hard disk is set as the secondary disk of the PC.
4. In PPC-1261V SERIES, each storage device shall have two partitions, to ensure the successful operation of system backup and recovery.
5. The file system in the partition of the backup disk can differ from that of the recovery disk; however, the file systems other than FAT32 /NTFS /EXT2 /EXT3 /EXT4 are unsupported.
6. Please make sure the backup image files are ready when implementing recovery for the first time (that is to say, the data shall be backed up following the foresaid steps). Otherwise, the recovery is invalid.

B. Operating Steps:

1. Enable or disable EVOC One-key Recovery Function.

   Press “DEL” key to enter the BIOS Setup interface after the power-on interface appears.

   (1) Find the BOOT option in BIOS Setup interface, set the EVOC Backup option to [Enable] or [Disabled] the EVOC One-key Recovery Function. This function is enabled by default.

2. Enter system backup & recovery interface.

   When EVOC One-key Recovery function is enabled, it will prompt “Please Press button <RCV> for System Recovery within 3 Seconds!!”; at that time, press the button <RCV> at the back of the panel PC within 3 seconds and the system will enter system backup and recovery interface.

3. Implementing system backup

   After entering the system backup & recovery interface, the system will enter into the following interface and ask the user whether to implement One-Button-Recovery, and there is a 25-second countdown. If the function is run for the first time, One-Button-Backup must be selected first and then the first backup operation will be operated. The operating system will display the following information:

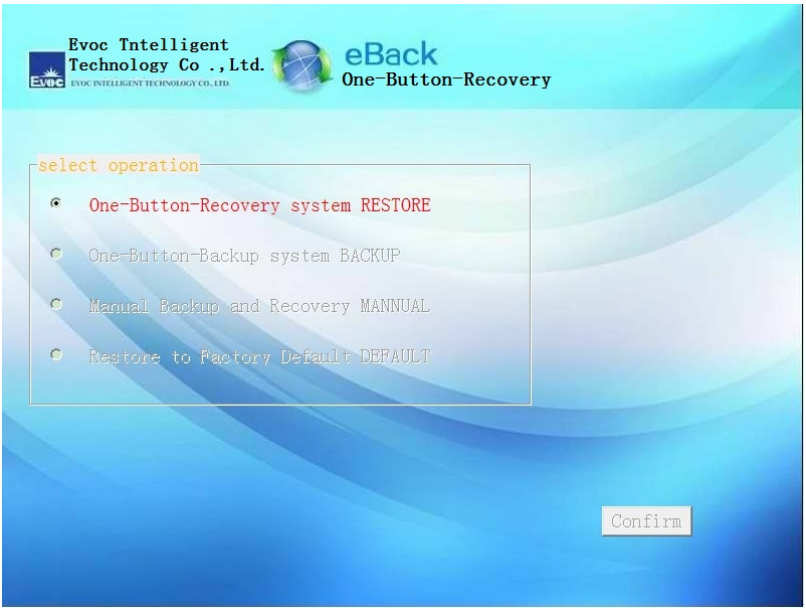

A. One-Button-Recovery system Restore

This option is used to restore the backup system image of the last time.

B. One-Button-Backup system Backup

This option is used to back up the first partition of the first HDD.

C. Mannual backup and restore Mannual

This option is used for mannual backup and restoration, and must be handled by professional personnel.

D. Restore to factory default values Default

This option is used to clear the backup information.

When the data backup or recovery operation is completed, the system will reboot.

4. Manual Backup/Restore

The main interface of One-Button-Restore is shown below. Use "↑" or "↓" to select the option to enter into manual Backup/Restore function. The manual backup function

usually needs to be operated by professionals, otherwise data loss or system crash may occur!

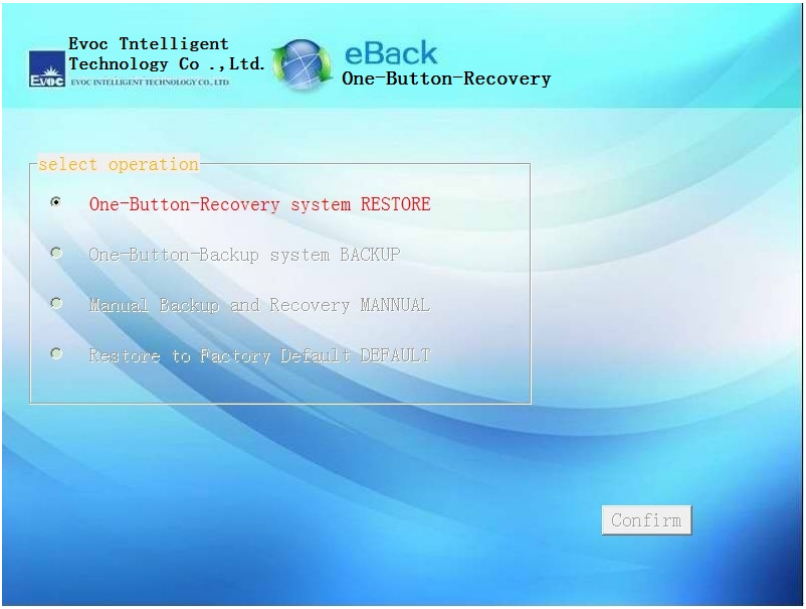

After selecting manual Backup/Restore in the interface above, press “Enter” and the following interface will appear:

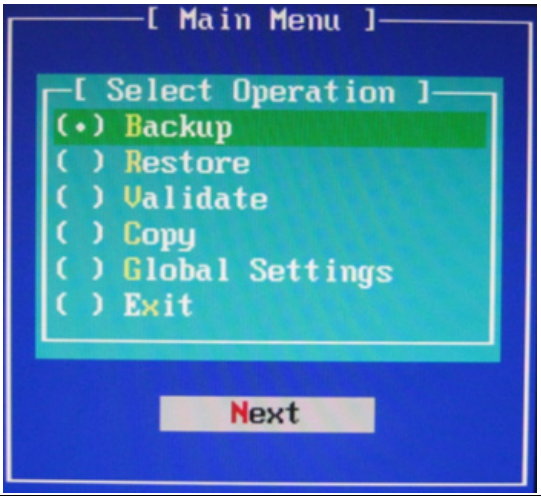

Under this interface: if you need to execute backup, select Backup; if backup has already been executed and restoration is needed, select Restore. The following shows the steps of backup, and those for restoration will be covered later.

The steps of Backup is shown below:

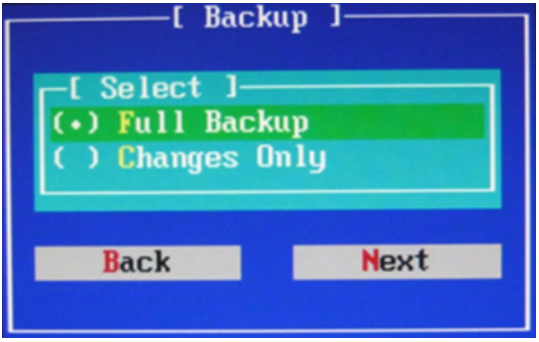

Select Full Backup, then the following interface will appear:

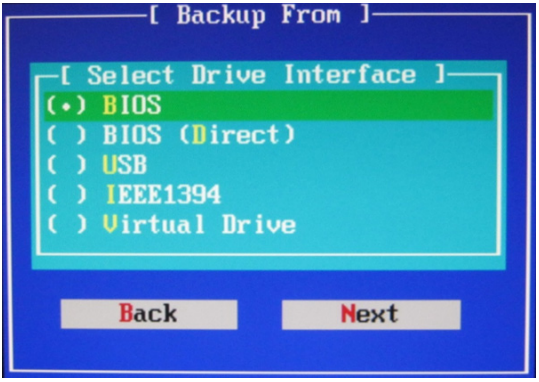

The default option for Select Drive Interface is BIOS. Press “Enter” and select the device which needs to be backed up.

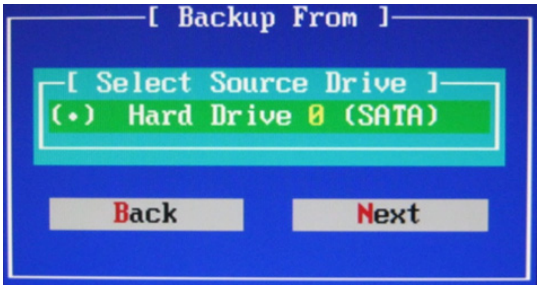

Select the partition to be backed up:

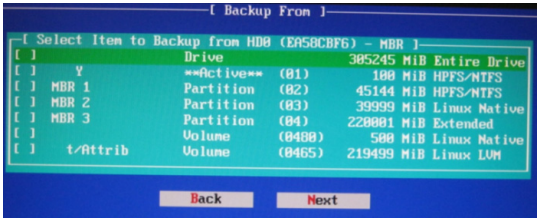

Use “↑” or “↓” and space bar to select, as shown below:

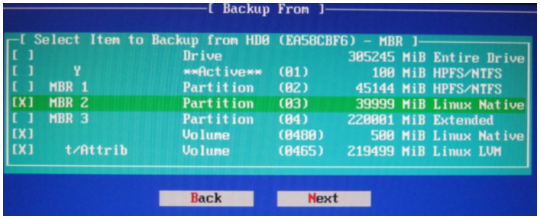

Select Multiple File Set, and press “Enter”.

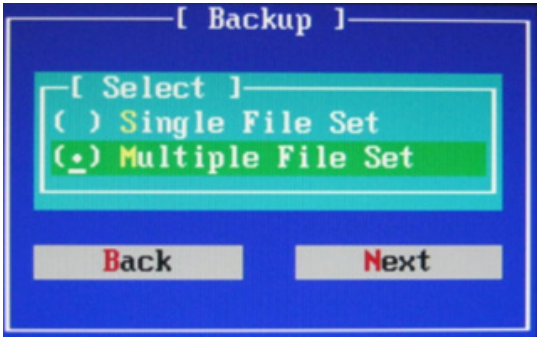

Select File (Direct):

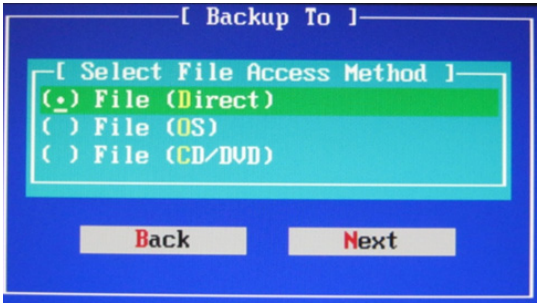

Select BIOS by default, as shown below:

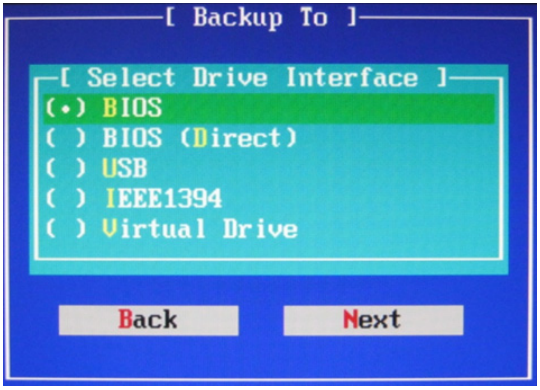

Select a destination location for backup:

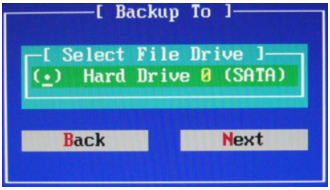

Select the specific partition for backup:

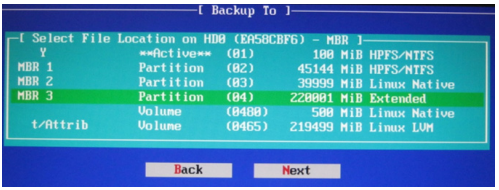

Input the file name of backup image, as shown below:



Select compression method and other additional information, default value can be selected here, as shown below:

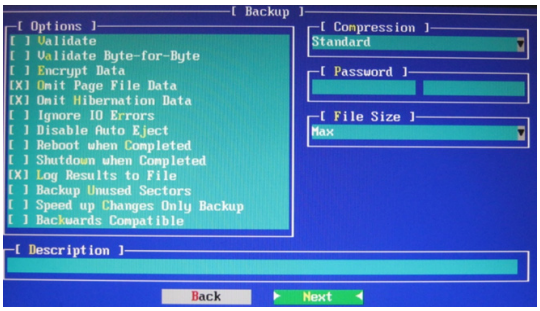

After pressing “Enter”, the Summary information for backup will be displayed, as shown below:

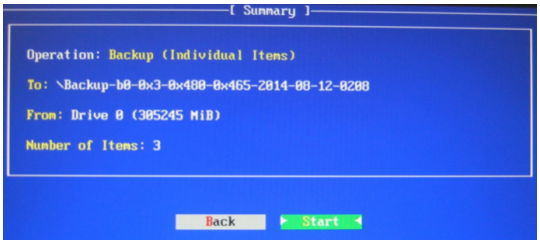

After pressing “Enter”, start the backup:

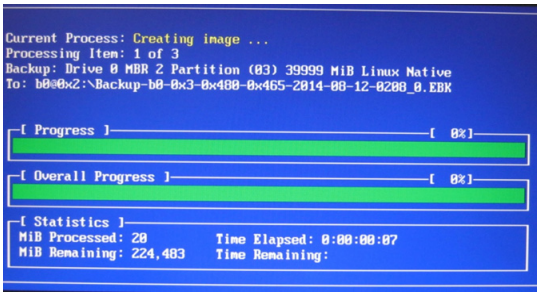

Wait for the completion of backup. The backup time depends on the size of backup file. When the following interface appears, it means the backup is finished, as shown below:

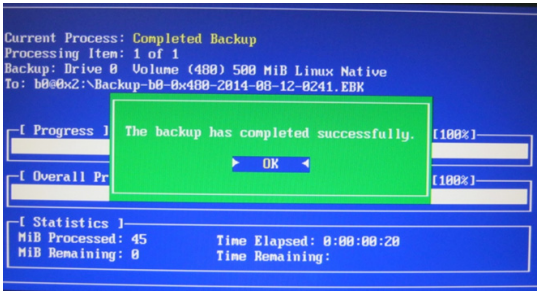

The steps of Restore are as follows:

Select Restore in the main menu, as shown below:



After pressing “Enter”, select Automatic for automatic installation, as shown below:

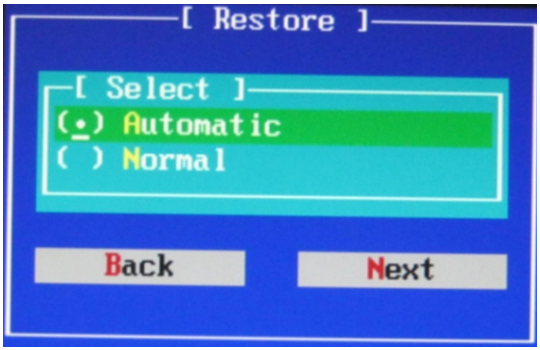

Select the method for restoration, use default value “File (Direct)” here, as shown below:

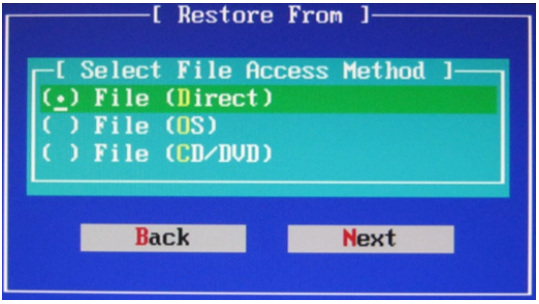

Select Drive Interface, use default value “BIOS” here, as shown below:

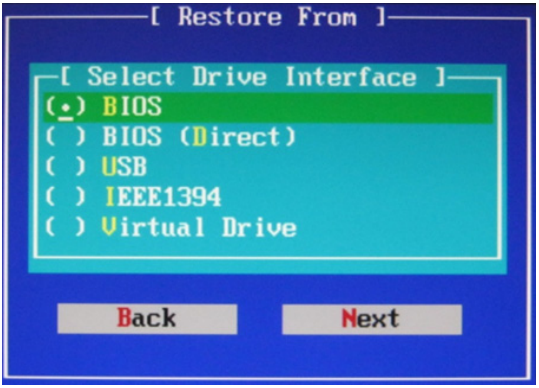

Select the location for restoration, as shown below:

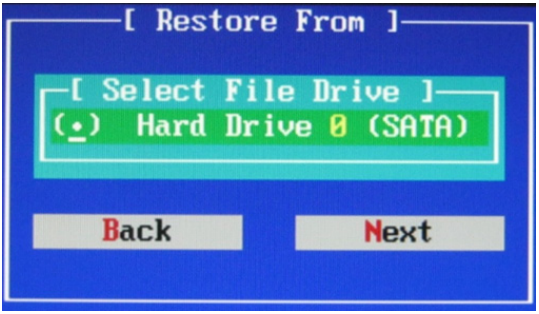

Select the location of restoration file in the partition, as shown below:

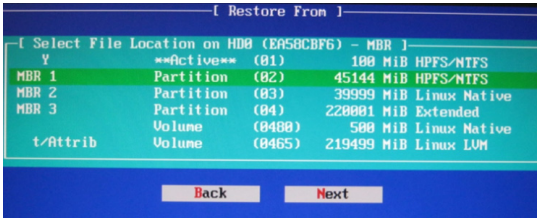

Select the file name of restoration image:

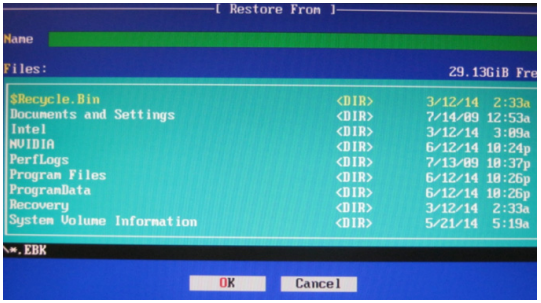

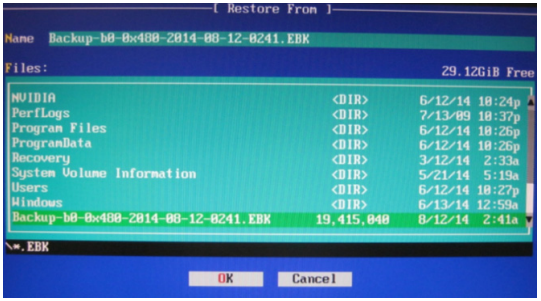

Select the destination location of file name, as shown below:

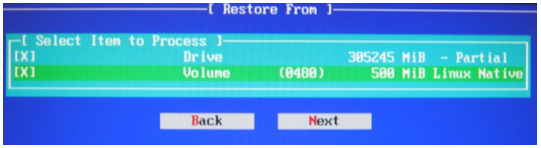

Warning information, select YES and press “Enter”, as shown below:

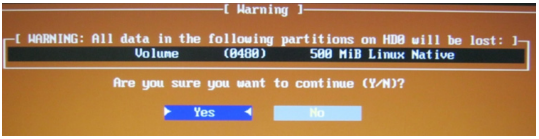

Warning confirmation, select YES and press “Enter”, as shown below:

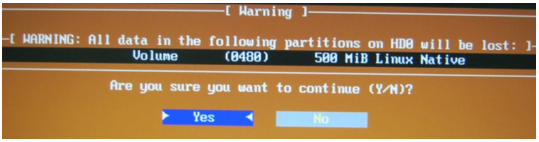

After pressing “Enter”, the Summary information for restoration process will be displayed, as shown below:

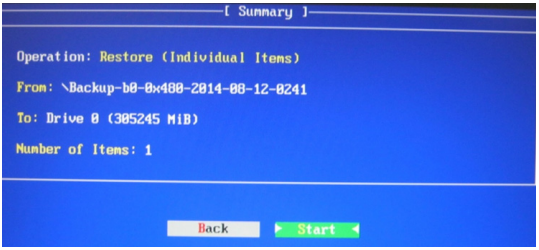

After pressing “Enter”, start the restoration process, as shown below:

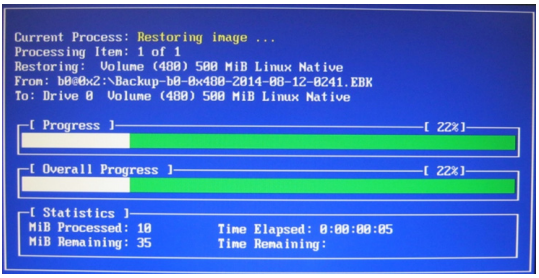

Wait until the following interface appear, which means the restoration process is finished, as shown below:

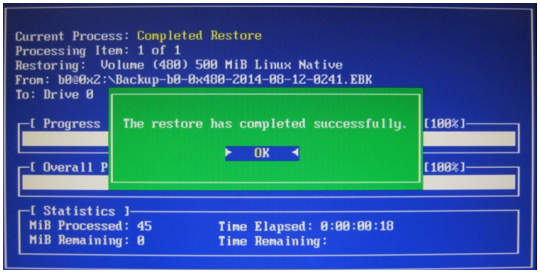

Note:

1） It is normal if the progress bar is not moving for around 1 minute; the system is operating at the background. Please wait with patience.

2） The time needed for system backup is dependent upon the size of the system disk.

Instructions for Anti-virus Function

The EVOC MBR anti-virus function is integrated in BIOS, which is well protected from damage from other software (including virus); therefore, it provides excellent defending and safety features. The instructions for the anti-virus function are as follows:

1. During POST period, press “Del” to enter BIOS configuration interface;
2. There is a functional option “Clear MBR Virus Function” in the Security menu of the BIOS configuration interface, which includes three sub-menus:
   a) Disabled: disable the function of clearing MBR virus;
   b) Manual: when MBR virus is detected in the hardware system, prompt to users whether to clear the MBR virus during POST period. Choose “Y” to clear the virus; choose “N” not to clear the virus.
   c) Quiet: when MBR virus is detected in the hardware system, clear the virus automatically without any prompt information.

9.3 Troubleshooting and Solutions

Common	Reasons	Troubleshooting and Solution
The device is not operating	No power supply	Please check the power supply and the power cable/connector.
	Improper device operating environment	1. Check with the environment conditions; 2. Please wait for twelve hours before powering on the device shipped in cold weather.
The external display is black	The display has not been turned on	Turn on the display
	The display is under "power saving" mode	Press any key on the keyboard.
	The luminance control is set to "Black".	Increase the screen luminance by luminance control. Please refer to the instructions of the display for detailed information.
	Power cable or display cable is not connected	1. Please check whether the power cable is correctly connected with the display, the system unit or the ground port. 2. Please check whether the display cable is correctly connected with the display and the system unit. 3. Contact Technique Support if the screen remains black after implementing the above measures.

Incorrect time or date on PC	Incorrect BIOS setting	Follow the power-on prompt and press the key to enter the BIOS Setup; adjust the time and date in BIOS Setup.
BIOS setting is correct while the time and date are incorrect.	Insufficient backup battery capacity	Replace the battery
USB device has no response	USB port is disabled in BIOS	Use other USB ports or enable that port.
	USB 2.0 device is connected; however, USB 2.0 is disabled.	Enable USB 2.0.
	USB port is not supported by the operating system.	1. Enable USB Legacy Support for the mouse and keyboard (Legacy USB is supported); 2. For other devices, appropriate USB drivers are required.
The computer is not booted or displays “Boot device not found”	In booting priority of the BIOS setting, the device is not the first priority or the device is not included in the booting device.	Modify the booting priority of the device in the Boot menu of BIOS setting or include that device into the booting priority.

No system disk can be found when powering on	The HDD power cable or data cable is not connected well.	Check whether the power cable and the data cable of the hard disk (the hard disk shall be installed with operating system and is bootable) are well connected.
	System files on the hard disk are damaged.	Enter the system (usually WinPE system) with a bootable disk; check whether the system in the hard disk is damaged. Reinstall the system if necessary.
Plug and play I/O card, no IO card is detected or no IO card can be used when used again.	Poor contact of the slot.	Poor contact is usually caused by frequent installation/ uninstallation of the PCI or ISA card, unstable fixing or improper dust-proof measures; please remove and install the card for a few times or use another slot.