120714-P1
Rev A, 7/97
Instruction Manual

MKS Type 247D
Four-Channel Readout

Six Shattuck Road
Andover, MA 01810-2449
(800) 227-8766 or (978) 975-2350

Fax: (978) 975-0093
E-mail: mks@mksinst.com
Web site: http://www.mksinst.com

WARRANTY

Type 247D Equipment

MKS Instruments, Inc. (**MKS**) warrants that the equipment described above (the "equipment") manufactured by **MKS** shall be free from defects in materials and workmanship for a period of one year from date of shipment and will for a period of two years from the date of shipment, correctly perform all date-related operations, including without limitation accepting data entry, sequencing, sorting, comparing, and reporting, regardless of the date the operation is performed or the date involved in the operation, provided that, if the equipment exchanges data or is otherwise used with equipment, software, or other products of others, such products of others themselves correctly perform all date-related operations and store and transmit dates and date-related data in a format compatible with **MKS** equipment. THIS WARRANTY IS **MKS'** SOLE WARRANTY CONCERNING DATE-RELATED OPERATIONS.

For the period commencing with the date of shipment of this equipment and ending one year later in the case of defects in materials and workmanship, but two years later in the case of failure to comply with the date-related operations warranty, **MKS** will, at its option, either repair or replace any part which is defective in materials or workmanship or with respect to the date-related operations warranty without charge to the purchaser. The foregoing shall constitute the exclusive and sole remedy of the purchaser for any breach by **MKS** of this warranty.

The purchaser, before returning any equipment covered by this warranty, which is asserted to be defective by the purchaser, shall make specific written arrangements with respect to the responsibility for shipping the equipment and handling any other incidental charges with the **MKS** sales representative or distributor from which the equipment was purchased or, in the case of a direct purchase from **MKS**, with the **MKS** home office in Andover, Massachusetts, USA.

This warranty does not apply to any equipment which has not been installed and used in accordance with the specifications recommended by **MKS** for the proper and normal use of the equipment. **MKS** shall not be liable under any circumstances for indirect, special, consequential, or incidental damages in connection with, or arising out of, the sale, performance, or use of the equipment covered by this warranty.

MKS recommends that all **MKS** pressure and flow products be calibrated periodically (typically every 6 to 12 months) to ensure accurate readings. When a product is returned to **MKS** for this periodic re-calibration it is considered normal preventative maintenance not covered by any warranty.

THIS WARRANTY IS IN LIEU OF ALL OTHER RELEVANT WARRANTIES, EXPRESSED OR IMPLIED, INCLUDING THE IMPLIED WARRANTY OF MERCHANTABILITY AND THE IMPLIED WARRANTY OF FITNESS FOR A PARTICULAR PURPOSE, AND ANY WARRANTY AGAINST INFRINGEMENT OF ANY PATENT.

120714-P1
Rev A, 7/97

MKS Type 247D
Four-Channel Readout

Copyright © 1997 by MKS Instruments, Inc.

All rights reserved. No part of this work may be reproduced or transmitted in any form or by any means, electronic or mechanical, including photocopying and recording, or by any information storage or retrieval system, except as may be expressly permitted in writing by MKS Instruments, Inc.

Baratron® is a registered trademark of MKS Instruments, Inc., Andover, MA

Table of Contents

Safety Information 1
Symbols Used in This Instruction Manual 1
Symbols Found on the Unit 2
Safety Procedures and Precautions 3
Sicherheitshinweise 5
In dieser Betriebsanleitung vorkommende Symbole 5
Am Gerät angebrachte Symbole 6
Sicherheitsvorschriften und Vorsichtsmaßnahmen 7
Informations relatives à la sécurité 9
Symboles utilisés dans ce manuel d'utilisation 9
Symboles apparaissant sur l'appareil 10
Mesures de sécurité et mises en garde 11
Información sobre seguridad 13
Símbolos usados en el manual de instrucciones 13
Símbolos que aparecen en la unidad 14
Procedimientos y precauciones de seguridad 15
Chapter One: General Information 17
Introduction 17
How This Manual is Organized 18
Customer Support 18
Chapter Two: Installation 19
How To Unpack the Type 247 Unit 19
Unpacking Checklist 19
Interface Cables 20
System Interface Cables 20
Generic Shielded Cables 22
Product Location and Requirements 23
Operating Environmental Requirements 23

Safety Conditions 23
Setup 24
Dimensions 24
Power Requirements 26
Mounting Instructions 26
System Configurations 27
Electrical Information 30
Fuses 30
Grounding 30
How To Set the Line Voltage 31
Connectors and Cables 32
Interface Connector P6 (Channels 1 to 4) 32
Interface Connector P5 (Channel 1) 33
MFC Connectors (J1 - J4) 34

Chapter Three: Overview 35
General Information 35
Flow Signal Path 35
Set Point Signal 36
Set Point Signal Source 36
Set Point Function with Manual Flow Control 37
Set Point Function with External Flow Control 38
Set Point Function with Remote Flow Control 39
Front Panel Controls 40
Power ON/OFF Switch 40
Flow Indicator LED 40
Flow Control Switch 41
Digital Panel Meter 41
Channel Selector 41
Set Point Source Switch 41
Set Point Control 42
Read / Set Point Switch 42
Zero Control 42
Rear Panel Controls 43

Scaling Control Potentiometers 43
Decimal Point Selector Switches 44
Line Voltage Selector 44
Fuse 44
AC Line Cord 44
Interface Connector J6 - Channels 1 to 4 44
Interface Connector J5 - Channel 1 45
MFC Connectors 45
Scaling Controls 46
Scaling Control Factor 47
Scaling Control Potentiometer 48
Gas Correction Factor (GCF) 49
How To Calculate the GCF for Pure Gases 50
How To Calculate the GCF for Gas Mixtures 51
Labels 53
Serial Number Label 53

Chapter Four: Operation 55
How To Setup the System 55
Manual Flow Control 59
How To Manually Control Individual Gas Flows 59
How To Manually Control Ratioed Gas Flows 61
External Flow Control 63
How To Change the Dipswitch Settings 64
How To Control Individual Gas Flows with an External Controller 66
How To Control Pressure with Ratioed Gas Flows 66
Remote Flow Control 69
How To Control Gas Flow with TTL Logic 69

Chapter Five: Maintenance and Troubleshooting 71
General Information 71
Maintenance 71
How To Clean the Unit 71
How To Replace the Fuses 71

Troubleshooting 73
Power Supply 73
Channel Amplifiers 74
Internal +5 V Voltage Reference 75
External Ratio Amplifier 75
Digital Panel Meter 76
Set Point Buffer and Flow Switching Circuit 77

Appendix A: Product Specifications 79

Appendix B: Model Code Explanation 81
Model Code 81

Appendix C: Gas Correction Factors for Commonly Used Pure Gases 83

Index 87

List of Figures

Figure 1: Front Panel Dimensions 24
Figure 2: Top View Dimensions 25
Figure 3: Manual Flow Control 27
Figure 4: Pressure Control with an External Controller 28
Figure 5: Front Panel Controls 40
Figure 6: Rear Panel Controls 43
Figure 7: Scaling Control Potentiometer - Initial Setting 48
Figure 8: Serial Number Label 53
Figure 9: Scaling Control Potentiometer - Example Setting 57

List of Tables

Table 1: Definition of Symbols Found on the Unit 2
Tabelle 2: Definitionen der am Gerät angebrachten Symbole 6
Tableau 3 : Définition des symboles apparaissant sur l'appareil 10
Tabla 4 : Definición de los símbolos que aparecen en la unidad 14
Table 5: System Interface Cables 20
Table 6: Fuse Information 30
Table 7: Interface Connector P6 (Channels 1 to 4) Pinout 32
Table 8: Interface Connector P5 (Channel 1) Pinout 33
Table 9: MFC Interface Connectors (J1 - J4) Pinout 34
Table 10: MFC Gauge Factors 47
Table 11: Manual Flow Control - 247 Unit Front Panel Controls 55
Table 12: Ratio Control Set Point Levels 61
Table 13: Dipswitch S15 Initial Settings 64
Table 14: Dipswitch S15 Settings for +5 V Full Scale Input. 64
Table 15: Dipswitch S15 Settings for +1 V Full Scale Input. 65
Table 16: External Controller - Front Panel Controls 67
Table 17: Gas Correction Factors for Pure Gases 83

Safety Information

Symbols Used in This Instruction Manual

Definitions of WARNING, CAUTION, and NOTE messages used throughout the manual.

Warning 

The WARNING sign denotes a hazard. It calls attention to a procedure, practice, condition, or the like, which, if not correctly performed or adhered to, could result in injury to personnel.

Caution 

The CAUTION sign denotes a hazard. It calls attention to an operating procedure, practice, or the like, which, if not correctly performed or adhered to, could result in damage to or destruction of all or part of the product.

Note 

The NOTE sign denotes important information. It calls attention to a procedure, practice, condition, or the like, which is essential to highlight.

Symbols Found on the Unit

The following table describes symbols that may be found on the unit.

Definition of Symbols Found on the Unit			
On (Supply) IEC 417, No.5007	 Off (Supply) IEC 417, No.5008	 Earth (ground) IEC 417, No.5017	 Protective earth (ground) IEC 417, No.5019
 Frame or chassis IEC 417, No.5020	 Equipotentiality IEC 417, No.5021	 Direct current IEC 417, No.5031	 Alternating Current IEC 417, No. 5032
 Both direct and alternating Current IEC 417, No.5033-a	 Class ll equipment IEC 417, No.5172-a	 Three phase alternating Current IEC 617-2 No. 020206	
 Caution, refer to accompanying documents ISO 3864, No. B.3.1	 Caution, risk of electric shock ISO 3864, No. B.3.6	 Caution, hot surface IEC 417, No. 5041	

Table 1: Definition of Symbols Found on the Unit

Safety Procedures and Precautions

The following general safety precautions must be observed during all phases of operation of this instrument. Failure to comply with these precautions or with specific warnings elsewhere in this manual violates safety standards of intended use of the instrument and may impair the protection provided by the equipment. MKS Instruments, Inc. assumes no liability for the customer's failure to comply with these requirements.

DO NOT SUBSTITUTE PARTS OR MODIFY INSTRUMENT

Do not install substitute parts or perform any unauthorized modification to the instrument. Return the instrument to an MKS Calibration and Service Center for service and repair to ensure that all safety features are maintained.

SERVICE BY QUALIFIED PERSONNEL ONLY

Operating personnel must not remove instrument covers. Component replacement and internal adjustments must be made by qualified service personnel only.

GROUNDING THE PRODUCT

This product is grounded through the grounding conductor of the power cord. To avoid electrical shock, plug the power cord into a properly wired receptacle before connecting it to the product input or output terminals. A protective ground connection by way of the grounding conductor in the power cord is essential for safe operation.

DANGER ARISING FROM LOSS OF GROUND

Upon loss of the protective-ground connection, all accessible conductive parts (including knobs and controls that may appear to be insulating) can render an electrical shock.

GROUND AND USE PROPER ELECTRICAL FITTINGS

Dangerous voltages are contained within this instrument. All electrical fittings and cables must be of the type specified, and in good condition. All electrical fittings must be properly connected and grounded.

USE THE PROPER POWER CORD

Use only a power cord that is in good condition and which meets the input power requirements specified in the manual.

Use only a detachable cord set with conductors that have a cross-sectional area equal to or greater than 0.75 mm^2. The power cable should be approved by a qualified agency such as VDE, Semko, or SEV.

USE THE PROPER POWER SOURCE

This product is intended to operate from a power source that does not apply more voltage between the supply conductors, or between either of the supply conductors and ground, than that specified in the manual.

USE THE PROPER FUSE

Use only a fuse of the correct type, voltage rating, and current rating, as specified for your product.

DO NOT OPERATE IN EXPLOSIVE ATMOSPHERES

To avoid explosion, do not operate this product in an explosive environment unless it has been specifically certified for such operation.

Sicherheitshinweise

In dieser Betriebsanleitung vorkommende Symbole

Definition der mit WARNUNG!, VORSICHT! und HINWEIS überschriebenen Abschnitte in dieser Betriebsanleitung.

Warnung!



Das Symbol WARNUNG! weist auf eine Gefahrenquelle hin. Es macht auf einen Arbeitsablauf, eine Arbeitsweise, einen Zustand oder eine sonstige Gegebenheit aufmerksam, deren unsachgemäße Ausführung bzw. ungenügende Berücksichtigung zu Körperverletzung führen kann.

Vorsicht!



Das Symbol VORSICHT! weist auf eine Gefahrenquelle hin. Es macht auf einen Bedienungsablauf, eine Arbeitsweise oder eine sonstige Gegebenheit aufmerksam, deren unsachgemäße Ausführung bzw. Ungenügende Berücksichtigung zu einer Beschädigung oder Zerstörung des Produkts oder von Teilen des Produkts führen kann.

Hinweis



Das Symbol HINWEIS weist auf eine wichtige Mitteilung hin, die auf einen Arbeitsablauf, eine Arbeitsweise, einen Zustand oder eine sonstige Gegebenheit von besonderer Wichtigkeit aufmerksam macht.

Am Gerät angebrachte Symbole

Der untenstehenden Tabelle sind die Bedeutungen der Symbole zu entnehmen, die an dem Gerät angebracht sind.

Definitionen der am Gerät angebrachten Symbole			
Ein (Netz) IEC 417, Nr. 5007	 Aus (Netz) IEC 417, Nr. 5008	 Erde IEC 417, Nr. 5017	 Schutzleiter IEC 417, Nr. 5019
 Rahmen oder Chassis IEC 417, Nr. 5020	 Äquipotentialanschluß IEC 417, Nr. 5021	 Gleichstrom IEC 417, Nr. 5031	 Wechselstrom IEC 417, Nr. 5032
 Wechselstrom und Gleichstrom IEC 417, Nr. 5033-a	 Geräteklasse II IEC 417, Nr. 5172-a	 Drehstrom IEC 617-2 Nr. 020206	
 Vorsicht! Bitte Begleitdokumente lesen! ISO 3864, Nr. B.3.1	 Vorsicht! Stromschlaggefahr! ISO 3864, Nr. B.3.6	 Vorsicht! Heiße Fläche! IEC 417, Nr. 5041	

Tabelle 2: Definitionen der am Gerät angebrachten Symbole

Sicherheitsvorschriften und Vorsichtsmaßnahmen

Die untenstehenden allgemeinen Sicherheitsvorschriften sind bei allen Betriebs-phasen dieses Instruments zu befolgen. Jede Mißachtung dieser Sicherheits-vorschriften oder sonstiger spezifischer Warnhinweise in dieser Betriebsanleitung stellt eine Zuwiderhandlung der für dieses Instrument geltenden Sicherheits-standards dar und kann die an diesem Instrument vorgesehenen Schutzvor-richtungen unwirksam machen. MKS Instruments, Inc. haftet nicht für eine Mißachtung dieser Sicherheitsvorschriften seitens des Kunden.

Keine Teile austauschen und keine Veränderungen vornehmen!

Bauen Sie in das Instrument keine Ersatzteile ein, und nehmen Sie keine eigenmächtigen Änderungen am Gerät vor! Schicken Sie das Instrument zu Wartungs- und Reparatur-zwecken an einen MKS-Kalibrierungs- und -Kundendienst ein! Dadurch wird sicher-gestellt, daß alle Sicherheitseinrichtungen voll funktionsfähig bleiben.

Wartung nur durch qualifizierte Fachleute!

Das Gehäuse des Instruments darf vom Bedienpersonal nicht geöffnet werden. Das Auswechseln von Bauteilen und das Vornehmen von internen Einstellungen ist nur von qualifizierten Fachleuten durchzuführen.

Produkt erden!

Dieses Produkt ist mit einer Erdleitung und einem Schutzkontakt am Netzstecker versehen. Um der Gefahr eines elektrischen Schlages vorzubeugen, ist das Netzkabel an einer vorschriftsmäßig geerdeten Schutzkontaktsteckdose anzuschließen, bevor es an den Eingangs- bzw. Ausgangsklemmen des Produkts angeschlossen wird. Das Instrument kann nur sicher betrieben werden, wenn es über den Erdleiter des Netzkabels und einen Schutzkontakt geerdet wird.

Gefährdung durch Verlust der Schutzerdung!

Geht die Verbindung zum Schutzleiter verloren, besteht an sämtlichen zugänglichen Teilen aus stromleitendem Material die Gefahr eines elektrischen Schlages. Dies gilt auch für Knöpfe und andere Bedienelemente, die dem Anschein nach isoliert sind.

Erdung und Verwendung geeigneter elektrischer Armaturen!

In diesem Instrument liegen gefährliche Spannungen an. Alle verwendeten elektrischen Armaturen und Kabel müssen dem angegebenen Typ entsprechen und sich in einwand-freiem Zustand befinden. Alle elektrischen Armaturen sind vorschriftsmäßig anzubringen und zu erden.

Richtiges Netzkabel verwenden!

Das verwendete Netzkabel muß sich in einwandfreiem Zustand befinden und den in der Betriebsanleitung enthaltenen Anschlußwerten entsprechen.

Das Netzkabel muß abnehmbar sein. Der Querschnitt der einzelnen Leiter darf nicht weniger als 0,75 mm^2 betragen. Das Netzkabel sollte einen Prüfvermerk einer zuständigen Prüfstelle tragen, z.B. VDE, Semko oder SEV.

Richtige Stromquelle verwenden!

Dieses Produkt ist für eine Stromquelle vorgesehen, bei der die zwischen den Leitern bzw. zwischen jedem der Leiter und dem Masseleiter anliegende Spannung den in dieser Betriebsanleitung angegebenen Wert nicht überschreitet.

Richtige Sicherung benutzen!

Es ist eine Sicherung zu verwenden, deren Typ, Nennspannung und Nennstromstärke den Angaben für dieses Produkt entsprechen.

Gerät nicht in explosiver Atmosphäre benutzen!

Um der Gefahr einer Explosion vorzubeugen, darf dieses Gerät nicht in der Nähe explosiver Stoffe eingesetzt werden, sofern es nicht ausdrücklich für diesen Zweck zertifiziert worden ist.

Informations relatives à la sécurité

Symboles utilisés dans ce manuel d'utilisation

Définition des indications AVERTISSEMENT, ATTENTION et REMARQUE utilisées dans ce manuel.

Avertissement



L'indication AVERTISSEMENT signale un danger potentiel. Elle est destinée à attirer l'attention sur une procédure, une utilisation, une situation ou toute autre chose présentant un risque de blessure en cas d'exécution incorrecte ou de non-respect des consignes.

Attention



L'indication ATTENTION signale un danger potentiel. Elle est destinée à attirer l'attention sur une procédure, une utilisation, une situation ou toute autre chose présentant un risque d'endommagement ou de dégât d'une partie ou de la totalité de l'appareil en cas d'exécution incorrecte ou de non-respect des consignes.

Remarque



L'indication REMARQUE signale des informations importantes. Elle est destinée à attirer l'attention sur une procédure, une utilisation, une situation ou toute autre chose présentant un intérêt particulier.

Symboles apparaissant sur l'appareil

Le tableau suivant décrit les symboles apparaissant sur l'appareil.

Définition des symboles apparaissant sur l'appareil			
Marche (sous tension) IEC 417, No. 5007	 Arrêt (hors tension) IEC 417, No. 5008	 Terre (masse) IEC 417, No. 5017	 Terre de protection (masse) IEC 417, No. 5019
 Masse IEC 417, No. 5020	 Equipotentialité IEC 417, No. 5021	 Courant continu IEC 417, No. 5031	 Courant alternatif IEC 417, No. 5032
 Courant continu et alternatif IEC 417, No. 5033-a	 Matériel de classe II IEC 417, No. 5172-a	 Courant alternatif triphasé IEC 617-2 No. 020206	
 Attention : se reporter à la documentation ISO 3864, No. B.3.1	 Attention : risque de secousse électrique ISO 3864, No. B.3.6	 Attention : surface brûlante IEC 417, No. 5041	

Tableau 3 : Définition des symboles apparaissant sur l'appareil

Mesures de sécurité et mises en garde

Prendre toutes les précautions générales suivantes pendant toutes les phases d'utilisation de cet appareil. Le non-respect de ces précautions ou des avertissements contenus dans ce manuel entraîne une violation des normes de sécurité relatives à l'utilisation de l'appareil et le risque de réduire le niveau de protection fourni par l'appareil. MKS Instruments, Inc. ne prend aucune responsabilité pour les conséquences de tout non-respect des consignes de la part de ses clients.

NE PAS SUBSTITUER DES PIÈCES OU MODIFIER L'APPAREIL

Ne pas utiliser de pièces détachées autres que celles vendues par MKS Instruments, Inc. ou modifier l'appareil sans l'autorisation préalable de MKS Instruments, Inc. Renvoyer l'appareil à un centre d'étalonnage et de dépannage MKS pour tout dépannage ou réparation afin de s'assurer que tous les dispositifs de sécurité sont maintenus.

DÉPANNAGE EFFECTUÉ UNIQUEMENT PAR UN PERSONNEL QUALIFIÉ

L'opérateur de l'appareil ne doit pas enlever le capot de l'appareil. Le remplacement des composants et les réglages internes doivent être effectués uniquement par un personnel d'entretien qualifié.

MISE À LA TERRE DE L'APPAREIL

Cet appareil est mis à la terre à l'aide du fil de terre du cordon d'alimentation. Pour éviter tout risque de secousse électrique, brancher le cordon d'alimentation sur une prise de courant correctement câblée avant de le brancher sur les bornes d'entrée ou de sortie de l'appareil. Une mise à la terre de protection à l'aide du fil de terre du cordon d'alimentation est indispensable pour une utilisation sans danger de l'appareil.

DANGER LIÉ À UN DÉFAUT DE TERRE

En cas de défaut de terre, toutes les pièces conductrices accessibles (y compris les boutons de commande ou de réglage qui semblent être isolés) peuvent être source d'une secousse électrique.

MISE À LA TERRE ET UTILISATION CORRECTE D'ACCESSOIRES ÉLECTRIQUES

Des tensions dangereuses existent à l'intérieur de l'appareil. Tous les accessoires et les câbles électriques doivent être conformes au type spécifié et être en bon état. Tous les accessoires électriques doivent être correctement connectés et mis à la terre.

UTILISATION D'UN CORDON D'ALIMENTATION APPROPRIÉ

Utiliser uniquement un cordon d'alimentation en bon état et conforme aux exigences de puissance d'entrée spécifiées dans le manuel.

Utiliser uniquement un cordon d'alimentation amovible avec des conducteurs dont la section est égale ou supérieure à 0,75 mm^2. Le cordon d'alimentation doit être approuvé par un organisme compétent tel que VDE, Semko ou SEV.

UTILISATION D'UNE ALIMENTATION APPROPRIÉE

Cet appareil est conçu pour fonctionner en s'alimentant sur une source de courant électrique n'appliquant pas une tension entre les conducteurs d'alimentation, ou entre les conducteurs d'alimentation et le conducteur de terre, supérieure à celle spécifiée dans le manuel.

UTILISATION D'UN FUSIBLE APPROPRIÉ

Utiliser uniquement un fusible conforme au type, à la tension nominale et au courant nominal spécifiés pour l'appareil.

NE PAS UTILISER DANS UNE ATMOSPHÈRE EXPLOSIVE

Pour éviter tout risque d'explosion, ne pas utiliser l'appareil dans une atmosphère explosive à moins qu'il n'ait été approuvé pour une telle utilisation.

Información sobre seguridad

Símbolos usados en el manual de instrucciones

Definiciones de los mensajes de ADVERTENCIA, PRECAUCIÓN Y OBSERVACIÓN usados en el manual.

Advertencia



El símbolo de ADVERTENCIA indica un riesgo. Pone de relieve un procedimiento, práctica, condición, etc., que, de no realizarse u observarse correctamente, podría causar lesiones a los empleados.

Precaución



El símbolo de PRECAUCIÓN indica un riesgo. Pone de relieve un procedimiento, práctica, etc., de tipo operativo que, de no realizarse u observarse correctamente, podría causar desperfectos al instrumento, o llegar incluso a causar su destrucción total o parcial.

Observación



El símbolo de OBSERVACIÓN indica información de importancia. Pone de relieve un procedimiento, práctica, condición, etc., cuyo conocimiento resulta esencial.

Símbolos que aparecen en la unidad

En la tabla que figura a continuación se indican los símbolos que aparecen en la unidad.

Definición de los símbolos que aparecen en la unidad			
Encendido (alimentación eléctrica) IEC 417, N.° 5007	 Apagado (alimentación eléctrica) IEC 417, N.° 5008	 Puesta a tierra IEC 417, N.° 5017	 Protección a tierra IEC 417, N.° 5019
 Caja o chasis IEC 417, N.° 5020	 Equipotencialidad IEC 417, N.° 5021	 Corriente continua IEC 417, N.° 5031	 Corriente alterna IEC 417, N.° 5032
 Corriente continua y alterna IEC 417, N.° 5033-a	 Equipo de clase II IEC 417, N.° 5172-a	 Corriente alterna trifásica IEC 617-2 N.° 020206	
 Precaución. Consultar los documentos adjuntos ISO 3864, N.° B.3.1	 Precaución. Riesgo de descarga eléctrica ISO 3864, N.° B.3.6	 Precaución. Superficie caliente IEC 417, N.° 5041	

Tabla 4 : Definición de los símbolos que aparecen en la unidad

Procedimientos y precauciones de seguridad

Las precauciones generales de seguridad que figuran a continuación deben observarse durante todas las fases de funcionamiento del presente instrumento. La no observancia de dichas precauciones, o de las advertencias específicas a las que se hace referencia en el manual, contraviene las normas de seguridad referentes al uso previsto del instrumento y podría impedir la protección que proporciona el instrumento. MKS Instruments, Inc., no asume responsabilidad alguna en caso de que el cliente haga caso omiso de estos requerimientos.

NO UTILIZAR PIEZAS NO ORIGINALES NI MODIFICAR EL INSTRUMENTO

No se debe instalar piezas que no sean originales ni modificar el instrumento sin autorización. Para garantizar que las prestaciones de seguridad se observen en todo momento, enviar el instrumento al Centro de servicio y calibración de MKS cuando sea necesaria su reparación y servicio de mantenimiento.

REPARACIONES EFECTUADAS ÚNICAMENTE POR TÉCNICOS ESPECIALIZADOS

Los operarios no deben retirar las cubiertas del instrumento. El cambio de piezas y los reajustes internos deben efectuarlos únicamente técnicos especializados.

PUESTA A TIERRA DEL INSTRUMENTO

Este instrumento está puesto a tierra por medio del conductor de tierra del cable eléctrico. Para evitar descargas eléctricas, enchufar el cable eléctrico en una toma debidamente instalada, antes de conectarlo a las terminales de entrada o salida del instrumento. Para garantizar el uso sin riesgos del instrumento resulta esencial que se encuentre puesto a tierra por medio del conductor de tierra del cable eléctrico.

PELIGRO POR PÉRDIDA DE LA PUESTA A TIERRA

Si se pierde la conexión protectora de puesta a tierra, todas las piezas conductoras a las que se tiene acceso (incluidos los botones y mandos que pudieran parecer estar aislados) podrían producir descargar eléctricas.

PUESTA A TIERRA Y USO DE ACCESORIOS ELÉCTRICOS ADECUADOS

Este instrumento funciona con voltajes peligrosos. Todos los accesorios y cables eléctricos deben ser del tipo especificado y mantenerse en buenas condiciones. Todos los accesorios eléctricos deben estar conectados y puestos a tierra del modo adecuado.

USAR EL CABLE ELÉCTRICO ADECUADO

Usar únicamente un cable eléctrico que se encuentre en buenas condiciones y que cumpla los requisitos de alimentación de entrada indicados en el manual.

Usar únicamente un cable desmontable instalado con conductores que tengan un área de sección transversal equivalente o superior a 0,75mm². El cable eléctrico debe estar aprobado por una entidad autorizada como, por ejemplo, VDE, Semko o SEV.

USAR LA FUENTE DE ALIMENTACIÓN ELÉCTRICA ADECUADA

Este instrumento debe funcionar a partir de una fuente de alimentación eléctrica que no aplique más voltaje entre los conductores de suministro, o entre uno de los conductores de suministro y la puesta a tierra, que el que se especifica en el manual.

USAR EL FUSIBLE ADECUADO

Usar únicamente un fusible del tipo, clase de voltaje y de corriente adecuados, según lo que se especifica para el instrumento.

EVITAR SU USO EN ENTORNOS EXPLOSIVOS

Para evitar el riesgo de explosión, no usar este instrumento o en un entorno explosivo, a no ser que haya sido certificado para tal uso.

Chapter One: General Information

Introduction

The MKS Type 247D Four-Channel Mass Flow Controller Power Supply/Readout is designed as power supply/readout and set point source for four analog mass flow controllers (MFCs). The unit can also power and monitor the flow rate through analog mass flow meters (MFMs).

The 247 unit consists of a power supply, four signal conditioning channels, four set point circuits, and a digital panel meter (DPM) to display the flow rate of any single channel of a MFC or MFM. It may be used to monitor and provide set point levels for MFCs and to provide ratioed set points for multiple gas control.

The 247 unit is a versatile instrument that may be used separately or as part of a larger control system. The unit can be operated manually via the front panel controls, through an external controller, or through remote TTL logic control.

The 247 readout is primarily designed to interface with MKS analog mass flow controllers; however, with the proper interface cable, you can use most major MFCs. Refer to Table 5, page 20, for a list of MKS interface cables.

How This Manual is Organized

This manual is designed to provide instructions on how to set up and install a Type 247 unit.

Before installing your Type 247 unit in a system and/or operating it, carefully read and familiarize yourself with all precautionary notes in the *Safety Messages and Procedures* section at the front of this manual. In addition, observe and obey all WARNING and CAUTION notes provided throughout the manual.

Chapter One: General Information, (this chapter) introduces the product and describes the organization of the manual.

Chapter Two: Installation, explains the environmental requirements and describes how to mount the instrument in your system.

Chapter Three: Overview, gives a brief description of the instrument and its functionality.

Chapter Four: Operation, describes how to use the instrument and explains all the functions and features.

Chapter Five: Maintenance and Troubleshooting, describes basic maintenance procedures and troubleshooting procedures should the 247 unit malfunction.

Appendix A: Product Specifications, lists the specifications of the instrument.

Appendix B: Model Code Explanation, describes the instrument's ordering code.

Appendix C: Gas Correction Factors, lists the gas correction factors for some commonly used pure gases.

Customer Support

Standard maintenance and repair services are available at all of our regional MKS Calibration and Service Centers, listed on the back cover. In addition, MKS accepts the instruments of other manufacturers for recalibration using the Primary and Transfer Standard calibration equipment located at all of our regional service centers. Should any difficulties arise in the use of your Type 247 instrument, or to obtain information about companion products MKS offers, contact any authorized MKS Calibration and Service Center. If it is necessary to return the instrument to MKS, please obtain an ERA Number (Equipment Return Authorization Number) from the MKS Calibration and Service Center before shipping. The ERA Number expedites handling and ensures proper servicing of your instrument.

Please refer to the inside of the back cover of this manual for a list of MKS Calibration and Service Centers.

Warning  **All returns to MKS Instruments must be free of harmful, corrosive, radioactive, or toxic materials.**

Chapter Two: Installation

How To Unpack the Type 247 Unit

MKS has carefully packed the Type 247 unit so that it will reach you in perfect operating order. Upon receiving the unit, however, you should check for defects, cracks, broken connectors, etc., to be certain that damage has not occurred during shipment.

Note  Do *not* discard any packing materials until you have completed your inspection and are sure the unit arrived safely.

If you find any damage, notify your carrier and MKS immediately. If it is necessary to return the unit to MKS, obtain an ERA Number (Equipment Return Authorization Number) from the MKS Service Center before shipping. Please refer to the inside of the back cover of this manual for a list of MKS Calibration and Service Centers.

Caution  **Only qualified individuals should perform the installation and any user adjustments. They must comply with all the necessary ESD and handling precautions while installing and adjusting the instrument. Proper handling is essential when working with all highly sensitive precision electronic instruments.**

Unpacking Checklist

Standard Equipment

- Type 247 Unit
- Type 247 Instruction Manual (this book)
- Power cord

Optional Equipment

- Electrical Connector Accessories Kit:

  247D-K1 (includes an I/O connector for the rear panel of the unit, a cover for the I/O connector, and a screw lock assembly for the I/O connector cover)

- Power Supply:

  260 PS-1 (± 15 V, 1.5 Amps)
  260 PS-3 (± 15 V, 3.2 Amps)

- Rack Mount Kit:

  RM-6 (for mounting one or two units in a 19” rack)

Interface Cables

As of January 1, 1996, most products shipped to the European Community must comply with the EMC Directive 89/336/EEC, which covers radio frequency emissions and immunity tests. In addition, as of January 1, 1997, some products shipped to the European Community must also comply with the Product Safety Directive 92/59/EEC and Low-Voltage Directive 73/23/EEC, which cover general safety practices for design and workmanship. MKS products that meet these requirements are identified by application of the CE mark.

To ensure compliance with EMC Directive 89/336/EEC, an overall metal braided shielded cable, properly grounded at both ends, is required during use. No additional installation requirements are necessary to ensure compliance with Directives 92/59/EEC and 73/23/EEC.

Note

1. Overall metal braided shielded cables, properly grounded at both ends, are required to meet CE specifications.
2. To order metal braided shielded cables, add an "S" after the cable type designation. For example, to order a standard cable to connect the 247 unit to a Type 1679A MFC, use part number CB259-5-10; for a metal braided shielded cable, use part number CB259S-5-10.

System Interface Cables

The system interface cables include cables to connect the 247 unit to a mass flow device, an external controller, a power supply, or another 247 unit.

System Interface Cables		
To Connect the 247 Unit To...	**Use the MKS Cable...**	
	Standard	**Shielded**
Mass Flow Controllers/Meters 258, 358, 558, 1150*, 1151*, 1152*, 1159, 1162, 1259, 1261, 1359, 1449, 1559**, 1562, 1678, 1679A, 2159, 2162, 2259 1179A, 2179A, 1479A, and 1679B with 15-pin Type "D" connectors	CB259-5-10	CB259S-5-10
Mass Flow Controllers/Meters 1462, 1661 1179A, 2179A, 1479A, and 1679B with 9-pin Type "D" connectors	CB147-12-10	CB147S-12-10
1160, 1163, 1461, 2160, 2163 MFC	CB259-10-10	CB259S-10-10

Table 5: System Interface Cables

(Continued on next page)

System Interface Cables *(Continued)*		
To Connect the 247 Unit To...	**Use the MKS Cable...**	
	Standard	**Shielded**
250 Controller (PCS)	CB247-2-3	CB247S-2-3
1250 Controller (PCS)	CB247-9-3	CB247S-9-3
247 Readout	CB247-4-x***	CB247S-4-x***

* *To connect the 1150, 1151, or 1152 unit to a 260 PS-1, you must also use cable CB260(S)-3-10.*

** *An extra power supply is needed if using more than two 1559 MFCs with one 247 unit. Use cable CB1559(S)-1-10 to connect the 247 unit to a 260 PS-1 Power Supply.*

*** *x = length in feet.*

Table 5: System Interface Cables

Generic Shielded Cables

MKS offers a full line of cables for all MKS equipment. Should you choose to manufacture your own cables, follow the guidelines listed below:

1. The cable must have an overall metal *braided* shield, covering all wires. Neither aluminum foil nor spiral shielding will be as effective; using either may nullify regulatory compliance.
2. The connectors must have a metal case which has direct contact to the cable's shield on the whole circumference of the cable. The inductance of a flying lead or wire from the shield to the connector will seriously degrade the shield's effectiveness. The shield should be grounded to the connector before its internal wires exit.
3. With very few exceptions, the connector(s) must make good contact to the device's case (ground). "Good contact" is about 0.01 ohms; and the ground should surround all wires. Contact to ground at just one point may not suffice.
4. For shielded cables with flying leads at one or both ends; it is important at each such end, to ground the shield *before* the wires exit. Make this ground with absolute minimum length. (A ¼ inch piece of #22 wire may be undesirably long since it has approximately 5 nH of inductance, equivalent to 31 ohms at 1000 MHz). After picking up the braid's ground, keep wires and braid flat against the case. With very few exceptions, grounded metal covers are not required over terminal strips. If one is required, it will be stated in the Declaration of Conformity or in the instruction manual.
5. In selecting the appropriate type and wire size for cables, consider:
   A. The voltage ratings;
   B. The cumulative I^2R heating of all the conductors (keep them safely cool);
   C. The IR drop of the conductors, so that adequate power or signal voltage gets to the device;
   D. The capacitance and inductance of cables which are handling fast signals, (such as data lines or stepper motor drive cables); and
   E. That some cables may need internal shielding from specific wires to others; please see the instruction manual for details regarding this matter.

Product Location and Requirements

The Type 247 unit meets the following criteria:

- POLLUTION DEGREE 2 in accordance with IEC 664
- Transient overvoltages according to INSTALLATION CATEGORY II

Operating Environmental Requirements

- Ambient Operating Temperature: 15° to 40° C (59° to 104° F)
- Main supply voltage fluctuations must not exceed ±10% of the nominal voltage
- Ventilation requirements include sufficient air circulation
- Connect the power cord into a properly grounded outlet

Safety Conditions

The 247 unit poses no safety risk under the following environmental conditions.

- Altitude: up to 2000 m
- Maximum relative humidity: 80% for temperatures up to 31° C, decreasing linearly to 50% at 40° C

Setup

Dimensions

Note All dimensions are listed in inches with millimeters referenced in parentheses.

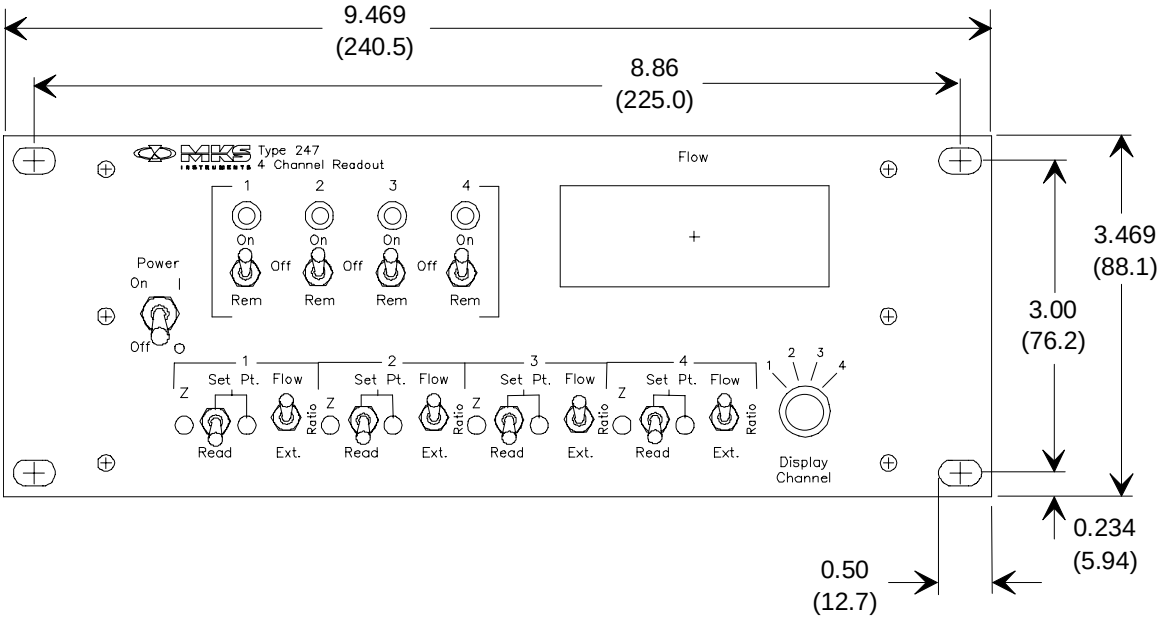

Figure 1: Front Panel Dimensions

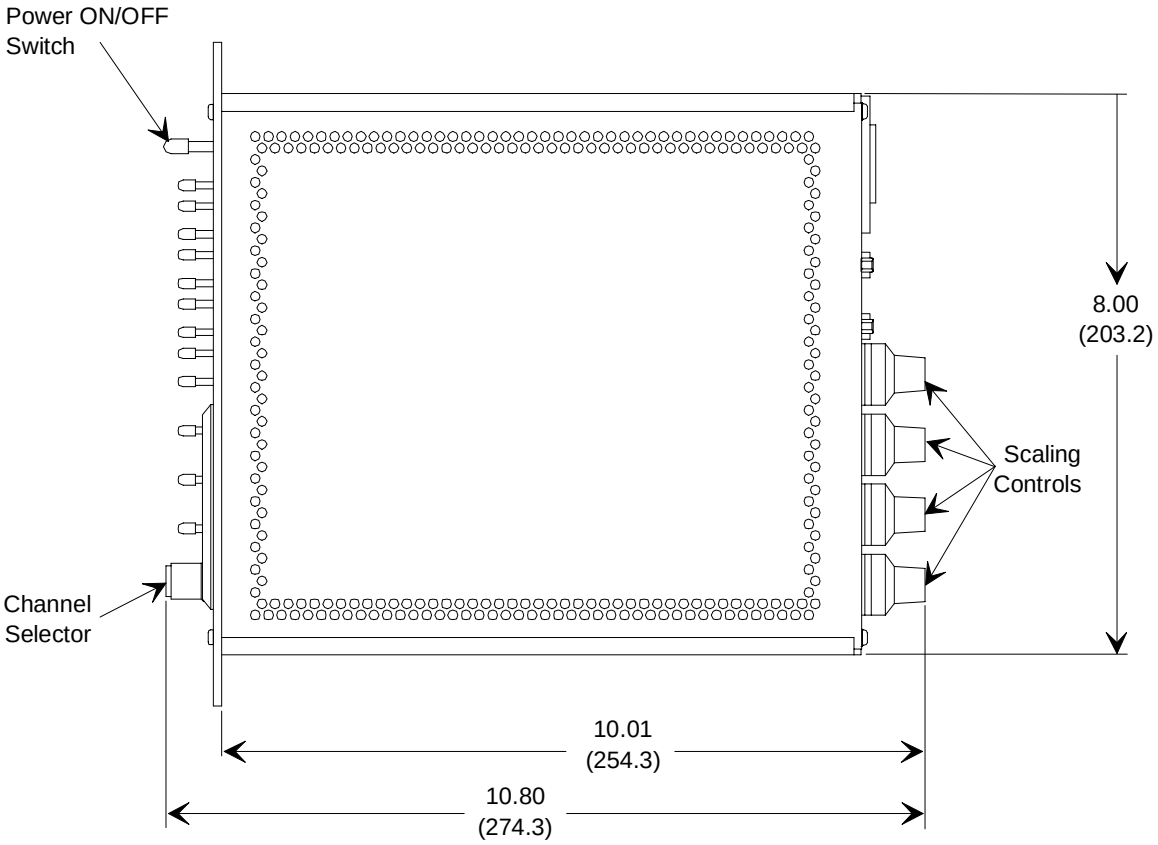

Figure 2: Top View Dimensions

Power Requirements

The power requirements for the 247 unit are:

- 115 VAC Setting 100 to 120 VAC nominal, 50/60 Hz
- 230 VAC Setting 200 to 240 VAC nominal, 50/60 Hz

The power consumption for the 247 unit is:

- 19 VA @ 115 VAC 60 Hz with *no* MFCs attached
- Additional 15 VA for start-up
- Additional 10 VA operational for *each* MFC attached

Mounting Instructions

247 Unit

The 247 unit can be used as a bench top instrument, or can be mounted through a panel or in a standard 19" rack. However the unit is mounted, leave adequate space around it for proper ventilation. Refer to *Dimensions*, page 24, for dimensional drawings of the 247 unit.

Note



1. When used with three or more MFCs, the 247 unit may become quite warm to the touch, especially when used with higher than nominal (115 VAC) line voltage.
2. An extra power supply is needed if using more than two 1559 MFCs with one 247 unit.

MFCs

Caution



Install the MFCs in the gas stream so that the flow direction corresponds to the flow marking on the base of the equipment.

Allow enough space for connector clearance, access to zero adjustments, and access to the seat adjustment in the control valve. This adjustment is below the external control valve on the 1259/2259 MFCs and on the top of the case on the 1159/1160 MFCs.

Refer to the appropriate instruction manual as needed for complete installation instructions.

System Configurations

The 247 unit can be configured for manual, external set point, or remote operation. The various system configurations and the required cabling are shown in Figure 3, page 27, and Figure 4, page 28. The system interface cables are listed in Table 5, page 20.

Refer to *Chapter Four: Operation*, page 55, for information on the setup and operation of these systems.

Manual Flow Control

Figure 3 illustrates a simple manual control system which requires only the use of the MFC interface cables.

With this configuration, the flow rate for each gas can be individually controlled with a front panel SET POINT CONTROL, or Channels 2 to 4 can be ratioed to the flow in Channel 1. Another four channels may be additionally ratioed to Channel 1 by adding a second 247 unit to the system.

Note An extra power supply is needed if using more than two 1559 MFCs with one 247 unit.

Figure 3: Manual Flow Control

External Flow Control

Flow control can be accomplished using a set point signal from an external controller only, or ratioed using an external controller and a pressure transducer.

Figure 4 illustrates pressure control with an external controller; the gas flow into a chamber is controlled to maintain a constant pressure. This system configuration requires the 247 unit, a controller, and a pressure transducer. More than four gases may be controlled by adding a second 247 unit to the system.

Note Any controller and pressure transducer may be used provided the signal that enters the 247 unit goes *positive* with increasing flow (correct polarity). Throughout this manual, the MKS Type 250 Pressure/Flow Controller and Type 127/227 Baratron® Pressure Transducers are used for example only.

Figure 4: Pressure Control with an External Controller

Remote Flow Control

Remote flow control can be accomplished using TTL logic control. Interface connector P6 provides the means to remotely turn the flow on/off and to adjust and monitor the flow rate in any channel using a set point signal from a voltage applied to P6. Refer to Table 7, page 32, for the pinout for Interface connector P6.

Electrical Information

Fuses

The line fuses protect the internal circuitry; both sides of the line are fused. The fuse values are listed in Table 6.

Fuse Information		
Voltage Setting	**Fuse Type**	**MKS Part Number**
115 VAC	0.8 A (T) / 250 V	024-5693
230 VAC	0.4 A (T) / 250 V	024-5811

Table 6: Fuse Information

Caution  **Disconnect the power cord from the 247 unit *before* you replace the fuse, to avoid any damage.**

Grounding

For protective earthing, plug the power cord into a properly grounded outlet.

How To Set the Line Voltage

The Line Voltage Selector configures the 247 unit to accept either 115 or 230 VAC input voltage. The value of the selected line voltage is visible through the window in the cover when it is closed.

Caution  **The Line Voltage Selector on the 247 unit must be set to the proper input voltage *before* you connect the power cord and turn on the power. Otherwise, the unit will be severely damaged.**

To change the line voltage:

1. Ensure that the power cord and all interface cables are disconnected from the 247 instrument.

2. Use a blunt instrument, such as a flat head screw driver, under the left hand side of the cover to the line voltage selector, and firmly pull towards you to unsnap the cover.

   The cover is attached firmly, so it requires a strong force from the screwdriver to loosen it. The cover will flip open, from left to right, to expose the line voltage selector drum.

3. Grasp the line voltage selector drum carefully and pull it out of its position.

4. Turn the selector drum to the appropriate line voltage.

5. Replace the line voltage selector drum into the 247 unit so that the voltage value can be read from bottom to top.

   The top and bottom of the voltage selector drum are shaped differently so that the drum will only fit into position in the correct orientation. The value of the selected line voltage is visible through the window in the cover when it is closed.

Connectors and Cables

The 247 unit's two Interface connectors and four MFC connectors are located on the rear panel of the unit (refer to Figure 6, page 43).

When the 247 is purchased as part of a complete system including MFCs, all of the required interface cables are supplied. When purchased separately, the interface cables must be specifically ordered. The system interface cables are listed in Table 5, page 20.

Interface Connector P6 (Channels 1 to 4)

The 25-pin male Type "D" connector, located on the rear panel (refer to Figure 6, page 43) provides the communications link to and from the unit, including the connection to the scaled transducer outputs, the lines to turn the flow on and off, and the set point input lines which remotely set the flow rate of the MFCs.

Interface Connector P6 (Channels 1 to 4) Pinout			
Pin	**Assignment**	**Pin**	**Assignment**
1	Signal Ground	14	Ch. 2 Transducer Output
2	Ch. 1 Transducer Output	15	Ch. 2 Scaled Output
3	Ch. 1 Scaled Output	16	Ch. 3 Transducer Output
4	Ch. 1 Set Point Input	17	Ch. 3 Scaled Output
5	Ch. 2 Set Point Input	18	Ch. 4 Transducer Output
6	Ch. 3 Set Point Input	19	Ch. 4 Scaled Output
7	Ch. 4 Set Point Input	20	No Connection
8	Digital Ground	21	No Connection
9	Power Ground	22	No Connection
10	Ch. 2 Flow ON/OFF Input	23	No Connection
11	Ch. 3 Flow ON/OFF Input	24	No Connection
12	Ch. 1 Flow ON/OFF Input	25	Chassis Ground
13	Ch. 4 Flow ON/OFF Input		

Table 7: Interface Connector P6 (Channels 1 to 4) Pinout

Note The "No Connection" pin assignment refers to a pin with no internal connection.

Interface Connector P5 (Channel 1)

The 9-pin Type “D” connector, located on the rear panel (refer to Figure 6, page 43), is used to join two 247 units, or to connect a 247 unit to an external controller which provides the external ratio signal interface.

Interface Connector P5 (Channel 1) Pinout	
Pin	**Assignment**
1	Signal Ground
2	Ch. 1 Scaled Output
3	Digital Ground
4	Power Ground
5	No Connection
6	Ch. 1 Transducer Output
7	External Ratio Set Point Input
8	Ratio Output Voltage
9	Chassis Ground

Table 8: Interface Connector P5 (Channel 1) Pinout

Note The “No Connection” pin assignment refers to a pin with no internal connection.

MFC Connectors (J1 - J4)

The four 15-pin Type "D" connectors (J1 through J4), located on the rear panel (refer to Figure 6, page 43), provide the connection for the mass flow controllers. Each connector provides the necessary power and set point voltages, and receives the flow output signal.

MFC Interface Connectors (J1 - J4) Pinout	
Pin	**Assignment**
1	No Connection
2	Flow Input Signal
3	No Connection
4	No Connection
5	Power Ground
6	-15 Volts
7	+15 Volts
8	Set Point Output Signal
9	No Connection
10	Input Stage Output
11	No Connection
12	Signal Ground
13	No Connection
14	No Connection
15	Chassis Ground

Table 9: MFC Interface Connectors (J1 - J4) Pinout

Note

1. The "No Connection" pin assignment refers to a pin with no internal connection.
2. An extra power supply is needed if using more than two 1559 MFCs with one 247 unit.

Chapter Three: Overview

General Information

The 247 power supply/readout can be connected to as many as four MFCs through connectors J1 to J4 on the rear panel (refer to Figure 6, page 43). Communication to and from the unit occurs through connector P6. Connector P5 is used to join two 247 units or to connect a 247 unit to an external controller.

The main power supply provides ±15 Volts to power the MFCs. The voltage corresponding to the flow rate, +5 VDC at full rated flow, is received at the input amplifier where the fine zero correction is made. The output from this amplifier is referred to as the *transducer output*.

This signal is amplified times two and applied to a scaling control, the output of which is buffered to become the scaled output. This signal is applied to the Digital Panel Meter on the front panel (refer to Figure 5, page 40) and to the *scaled output* on the rear panel connectors P5 and P6.

The MFCs set point signal is applied through a switch circuit which is controlled from a front panel switch or a TTL logic level on connector P6. When the circuit is turned ON, the set point signal is applied to the MFC and flow begins. When the switch circuit is turned OFF, flow will stop.

The flow rate is determined by the magnitude of the set point signal with +5 V corresponding to full flow. The source of this signal is selected by the Set Point Source Switch on the front panel (refer to *Set Point Signal Source*, page 36, for additional information).

Flow Signal Path

The flow signal from the MFC (0 to 5 V) enters the 247 unit at pin 2 in Connectors J1 to J4. The signal is buffered and the system injects a zero correction signal, if necessary, using the front panel ZERO CONTROL. This signal goes to an output pin of the Interface connector P6 and to the spring loaded READ/SET POINT switch. The *READ* position is the default; the up or *SET POINT* position is a momentary condition which allows the flow signal to be amplified times two and scaled by the scaling control. Refer to *Front Panel Controls*, page 40, for more information.

The zeroed and scaled signal is sent to P6 and the Channel Selector Switch, which routes the signal to the Digital Panel Meter where it is read directly in flow engineering units (sccm or slm).

Set Point Signal

The set point signal that is sent to each MFC through connectors J1 to J4 may be generated in a variety of ways:

- *Manually* using independent gas flows or by ratioing the gas flows for one to three channels to the flow in Channel 1
- *Externally* using a set point signal from an external controller, or by ratioing gas flows based on the set point signal from an external controller and measurements from a pressure transducer
- *Remotely* using TTL logic control

Set Point Signal Source

The flow rate is determined by the magnitude of the set point signal with +5 V corresponding to full scale flow. The set point signal can be generated by:

- An internal +5 V reference
- A ratio signal from Channel 1 or an external controller
- An externally applied voltage

The source of the set point signal is selected by the three position SET POINT SOURCE SWITCH on the front panel (refer to Figure 5, page 40), as either FLOW, RATIO, or EXT. The FLOW and RATIO positions of this switch are driven by the output of the SET POINT CONTROL; the EXT position is driven by an externally applied voltage.

The output of the SET POINT CONTROL is driven by an internal dipswitch (S15), located on the rear of the Main PC board. The 247 unit is initially configured so that the ratio set point signal is based on the Transducer Output of Channel 1 (the internal reference). To change the configuration so that the source of the set point signal is based on the External Ratio Amplifier, you must change the dipswitch settings in S15. Refer to *How To Change the Dipswitch Settings*, page 64, for more information.

Set Point Function with Manual Flow Control

Individual Gas Flows

The SET POINT SOURCE SWITCH must be set to the FLOW position, when manually controlling individual gas flows.

In this mode of operation, a precise 5.000 VDC signal is generated from the power supply, and flows through the SET POINT SOURCE SWITCH to the SET POINT CONTROL attenuator. The signal then flows to the buffer amplifier, and can be read on the Digital Panel Meter by pressing the READ/SET POINT SWITCH. If necessary, the set point signal can be adjusted using the SET POINT CONTROL.

The set point signal is finally sent to the MFC by placing the front panel FLOW CONTROL SWITCH to the ON position. This switch activates the output switch which allows the set point signal to flow through it, through the unity gain buffer amplifier, and on to the MFC.

When the FLOW CONTROL SWITCH is in the OFF position, the switch places a small negative voltage on the set point output line so that the control valve will be closed positively. When the FLOW CONTROL SWITCH is in the REMOTE position, a logic signal coming in through Interface connector P6 may be used to gate the set point signal to the MFC. A logic low turns the flow ON; a logic high turns the flow OFF.

Ratioed Gas Flows

The SET POINT SOURCE SWITCH must be set to the FLOW position for Channel 1, and the RATIO position for Channels 2 to 4, when manually controlling ratioed gas flows.

In this mode of operation, one to three channels of flow are ratioed from Channel 1. A fraction of the actual flow of Channel 1 is used as the source for the set points of Channels 2 to 4.

The flow of Channel 1 is established using the set point routing described in *Individual Gas Flows,* page 37. To derive the set point signals for Channels 2 to 4, the SET POINT SOURCE SWITCHES for Channels 2 to 4 are placed in the RATIO position.

The zeroed flow signal of Channel 1 passes through a dipswitch inside of the unit and into the SET POINT CONTROL SWITCHES. This signal is attenuated by the SET POINT CONTROL pot and is sent on to the MFC by placing the front panel FLOW CONTROL SWITCH to the ON position (in the same way as described in *Individual Gas Flows,* page 37).

Since the flow in Channels 2 to 4 is ratioed to Channel 1, the percent of full scale flow in these channels may not exceed the percent of full scale flow in Channel 1. For example, with 75% of flow in Channel 1, Channels 2 to 4 may not exceed 75% of their rated flow.

The ratio is based on voltage, therefore, when full scales are mixed, built-in ratio factors exist. For example, if you are using two channels where the full scale is 10 sccm for Channel 1 and 1000 sccm for Channel 2, with Channel 1 set for 100% (10 sccm) and Channel 2 set for 50% (500 sccm), the flow ratio will be 10:500.

Set Point Function with External Flow Control

The SET POINT SOURCE SWITCH must be set to the RATIO position, when using an external set point source.

Individual Gas Flows

This mode of operation enables you to control individual gas flows using a set point signal from an external command. A 0 to 5 VDC signal from an external source is received at Interface Connector P6, where it is routed by the SET POINT SOURCE SWITCH to each MFC. Its application to the MFC is the same as that described in *Individual Gas Flows*, page 37.

Note that each channel has its own external set point line. Any or all channels may have their set points or flow driven from the external source. Those that are not may be adjusted using the controls on the 247 unit, as described in *How To Manually Control Individual Gas Flows,* page 59.

Pressure Control with Ratioed Gas Flows

In this type of operation, the pressure in a chamber is maintained by controlling the ratio of gas flows, based on a set point signal from an external controller and measurements from a pressure transducer. This system configuration requires the 247 unit, an external controller, and a pressure transducer, as shown in Figure 4, page 28. More than four gases may be controlled by adding a second 247 unit to the system.

Note that any or all channels may be used to flow gas to maintain pressure with a preset ratio of flows. Any channel that is not used in this way may be used independently.

Note 

Any controller and pressure transducer may be used provided the signal that enters the 247 unit goes *positive* with increasing flow (correct polarity). Throughout this manual, the MKS Type 250 Pressure/Flow Controller and Type 127/227 Baratron Pressure Transducers are used for example only.

In this mode of operation, the 247 unit receives a signal from the controller called a pressure control signal (PCS). This signal goes to an appropriate level from 0 to 10 VDC to drive the pressure signal to equal its set point signal (within the 250 controller). The PCS voltage enters the 247 unit at Interface Connector P5, is buffered and amplified, and routed to the RATIO position of the SET POINT SOURCE SWITCH. From this point the paths are the same as those described in *Ratioed Gas Flows*, page 37.

Set Point Function with Remote Flow Control

The SET POINT SOURCE SWITCH must be set to the EXT position, when using remote flow control.

Interface connector P6 provides the means to remotely turn the flow on/off and to adjust and monitor the flow rate in any channel using a set point signal from a voltage applied to P6.

Refer to *How To Control Gas Flow with TTL Logic*, page 69, for more information.

Front Panel Controls

Figure 5 shows the location of the controls on the front panel of the 247 controller.

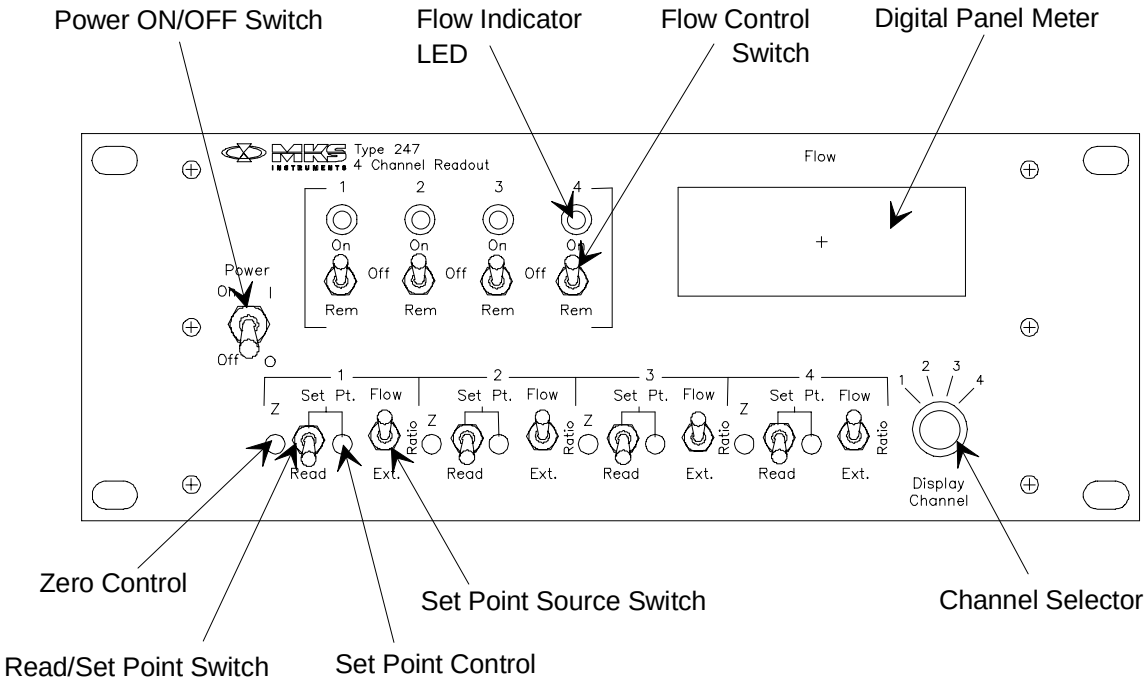

Figure 5: Front Panel Controls

Power ON/OFF Switch

The Power switch controls power to the 247 unit and all attached MFCs.

Flow Indicator LED

This green LED indicates that the set point signal has been applied to the MFC. It does not mean that flow is occurring or that its value is correct.

Flow Control Switch

This switch controls the circuit which applies the set point signal to the MFC as follows:

ON: The switch activates the output switch which allows the set point signal to flow through it, through the unity gain buffer amplifier, and on to the MFC.

OFF: The switch places a small negative voltage on the set output line so that the control valve will be closed positively.

REMOTE: A logic signal coming in through Interface connector P6 may be used to gate the set point signal to the MFC. Flow may be turned ON/OFF by an external TTL signal; a logic low turns the flow ON, a logic high or open turns the flow OFF.

Digital Panel Meter

The Digital Panel Meter (DPM) is a 3½ digit, 2 V full scale device. The DPM—set to read 1 VDC as 1000 counts full scale—displays the flow rate of the channel selected by the Channel Selector. The DPM also displays the set point signal for an MFC when its READ/SET POINT switch is held in the SET POINT position.

The Scaling Controls on the rear panel (refer to Figure 6, page 43) must be properly set for the meter to display a *direct* flow or set point reading, in sccm or slm. Refer to *Scaling Controls*, page 46, for more information.

Channel Selector

The Channel Selector switch controls input to the Digital Panel Meter.

Set Point Source Switch

This 3-position switch selects the source of the set point signal to be sent to the MFC. The FLOW and RATIO positions are driven by the output of the SET POINT CONTROL; the EXT position is driven by an externally applied voltage level. Refer to *Set Point Signal*, page 36, for more information.

FLOW Position: Selects the set point signal from the front panel Set Point Control, which is driven from the + 5 V internal reference. *The switch must be in this position when using Manual Flow Control.*

RATIO Position: Selects the set point signal from the front panel Set Point Control, which is driven from the Channel 1 Transducer Output or the External Ratio Amplifier, driven by an external controller (external set point input at Interface connector P5). *The switch must be in this position when using External Ratio Flow Control.*

EXT Position: Selects the set point signal from a pin on Interface connector P6, allowing the flow rate to be controlled directly from an external 0 to +5 V signal. *The switch must be in this position when using TTL logic control.*

Set Point Control

This 20-turn potentiometer sets the set point level when the Set Point Source Switch is in the FLOW or RATIO position. The ranges are:

FLOW Position: ± 0.1 to 100% of Full Rated Flow

RATIO Position: ± 0.1 to 100% of Channel 1 Flow/Ext. Ratio Signal

Read / Set Point Switch

This spring loaded switch allows you to read, from the Digital Panel Meter, either the flow rate or the set point value (which may be going to the MFC through the front panel flow switch). This allows you to check or set the MFCs zero, check or set the set point level, and check for an agreement between flow and set point when the MFC is so commanded.

The Scaling Controls on the rear panel (refer to Figure 6, page 43) must be properly set for the meter to display a *direct* set point reading, in sccm or slm. Refer to *Scaling Controls*, page 46, for more information.

Zero Control

This 20-turn potentiometer is used for fine zero adjustment. It has a limited range of ±3% of FS; therefore, larger adjustments must be made with the zero control on the MFC.

Rear Panel Controls

Figure 6 shows the location of the controls on the rear panel of the 247 controller.

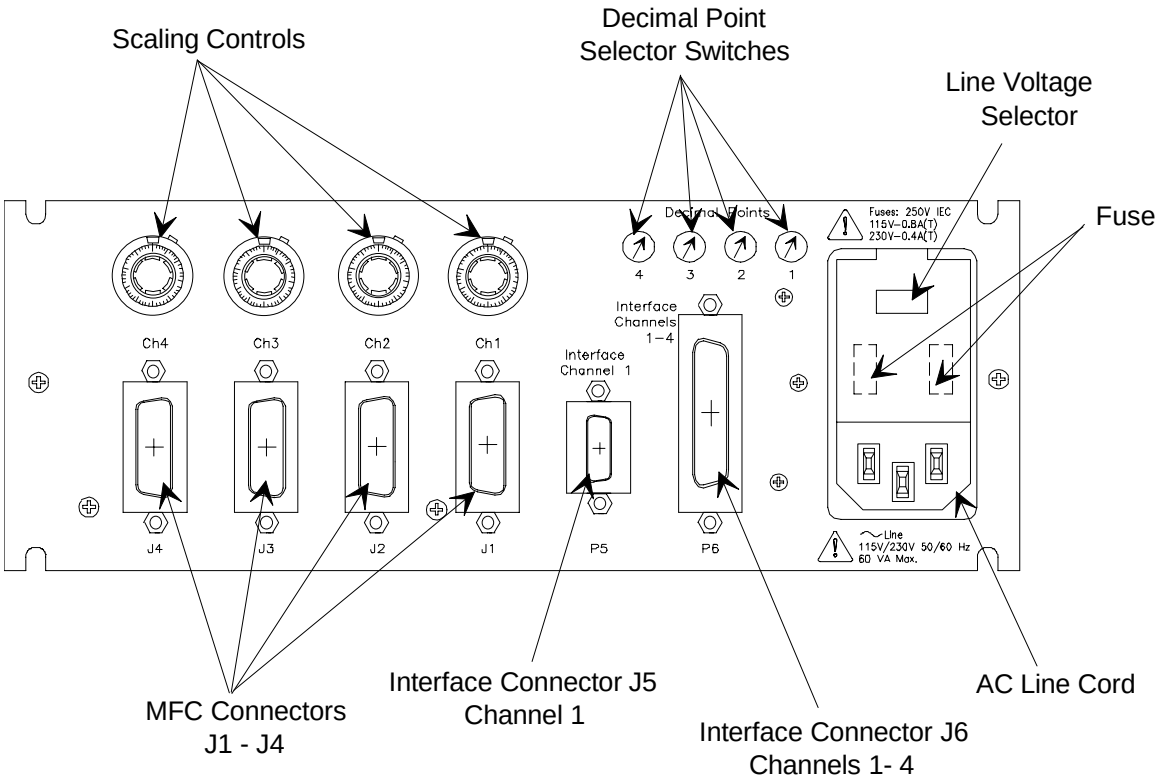

Figure 6: Rear Panel Controls

Scaling Control Potentiometers

These four 10-turn potentiometers are used to enter the scaling factor, which scales down the +5 VDC transducer output signal so that the Digital Panel Meter displays the flow rate and set point directly in sccm or slm.

Note

It is ***critical*** for proper system operation that the scaling factors are calculated properly and that the potentiometers are set correctly. Refer to *Scaling Controls*, page 46, for more information.

Decimal Point Selector Switches

These switches, one for each channel, set the decimal point for the Digital Panel Meter on the front panel.

The position of the decimal point is determined by the full scale range of the MFC in use. A 100 sccm mass flow controller requires the decimal point to be positioned as "100.0" (display at full rated flow).

Line Voltage Selector

The Line Voltage Selector configures the 247 unit to accept either 115 or 230 VAC input voltage. The voltage selected is visible in the panel cutout. Refer to *How To Set the Line Voltage,* page 31, for more information.

Caution  **The Line Voltage Selector on the 247 unit must be set to the proper input voltage *before* you connect the power cord and turn on the power. Otherwise, the unit will be severely damaged.**

Fuse

The fuse protects the internal circuitry of the 247 unit; both sides of the line are fused. The fuse values are listed in Table 6, page 30.

Caution  **Disconnect the power cord from the 247 unit *before* you replace the fuse, to avoid any damage.**

AC Line Cord

The AC Line Cord provides 115 or 230 VAC power to the 247 unit. For protective earthing, plug the power cord into a properly grounded outlet.

Interface Connector J6 - Channels 1 to 4

This 25-pin male Type "D" connector provides the communications link to and from the unit, including the connection to the scaled transducer outputs, the lines to turn the flow on and off, and the (external) set point input lines which remotely set the flow rate of the MFCs.

Refer to Table 7, page 32, for the Interface Connector J6 pinout.

Interface Connector J5 - Channel 1

This 9-pin Type “D” connector is used to connect two 247 units or to connect a 247 unit to an external pressure controller.

Individual flow rates are set, using the front panel Set Point Controls, as a fraction of Channel 1 of the first 247 unit; this ratio is maintained while the total flow is adjusted to maintain the desired pressure. When two 247 units are attached, four additional MFCs can be ratioed to Channel 1 of the first 247 unit.

When a 247 unit is connected to an external pressure controller, the controller provides the pressure control signal (PCS) that can be applied to all set point controls on the 247 unit.

Refer to Table 8, page 33, for the Interface Connector J5 pinout.

Note 

The MFC that is set to control at the highest percentage of its rated flow should be connected to Channel 1.

MFC Connectors

These 15-pin Type “D” connectors (J1 through J4) provide the connection for the mass flow controllers. Each connector provides the necessary power and set point voltages, and receives the flow output signal.

Refer to Table 9, page 34, for the MFC Connector pinout.

Scaling Controls

There are four *Scaling Control Potentiometers* on the rear panel of the 247 unit; one for each channel (refer to Figure 6, page 43). These 10-turn potentiometers are used to adjust the full scale voltage signals from the MFCs, which correspond to the flow rate, to a level that enables the digital panel meter (DPM) to display the flow rate and set point directly, in sccm or slm.

The 247 unit uses a digital panel meter that reads 1 VDC as 1000 counts full scale (FS). Although the DPM can accommodate a *maximum* of 2 VDC and can read up to 1999 counts, it cannot be adjusted to the 5000 counts needed to accommodate the +5 VDC full scale output signals from the MFCs. Therefore, the +5 VDC output voltage from each MFC must be scaled down so that the full scale counts (1000) read on the meter represent the full scale voltage from the MFCs. When the adjustment is properly made, flow can be read directly from the meter.

The amount by which the +5 VDC output signal is scaled down, the *Scaling Control Factor,* is application dependent and must be calculated for each MFC in use. The Scaling Control Factor for the MFCs is set with the *Scaling Control Potentiometers*.

Note 

It is ***critical*** for proper system operation that the Scaling Control Factors are calculated properly and that the Scaling Control Potentiometers are set correctly.

Scaling Control Factor

The Scaling Control Factor is the *product* of the Gauge Factor for the MFC in use and the Gas Correction Factor for the gas in use:

SCALING CONTROL FACTOR = GAUGE FACTOR x GAS CORRECTION FACTOR

Gauge Factor

The Gauge Factor is a factory set value which scales the +5 VDC output signal to the appropriate full scale range for the MFC, so that the digital panel meter reads 1000 counts. The gauge factors for various flow ranges are listed in Table 10.

MFC Gauge Factors	
MFC Flow Range (sccm)	**Gauge Factor**
1, 10, 100, 1000, 10K	100
2, 20, 200, 2000, 2K	200
5, 50, 500, 5000, 50K	50

Table 10: MFC Gauge Factors

Gas Correction Factor

A Gas Correction Factor (GCF) is used to indicate the ratio of flow rates of different gases which will produce the same output voltage from a mass flow controller. The GCF is a function of specific heat, density, and the molecular structure of the gases. Since flow controllers are usually calibrated with nitrogen, nitrogen is used as the baseline gas (GCF = 1).

Refer to Table 17, page 83, for a list of GCFs for commonly used pure gases. If the pure gas you are using is not listed in Table 17, page 83, or you are using a gas mixture, you must calculate its GCF. Refer to *How To Calculate the GCF for Pure Gases*, page 50, and *How To Calculate the GCF for Gas Mixtures*, page 51, for more information.

Note 

Refer to *How To Setup the System*, step 6, page 56, for more information and an example Scaling Control Factor calculation.

Scaling Control Potentiometer

The Scaling Control (refer to Figure 7) is a 10-turn potentiometer that serves as a voltage divider for the +5 VDC output signals from the MFCs; the control has a full scale setting of 1000.

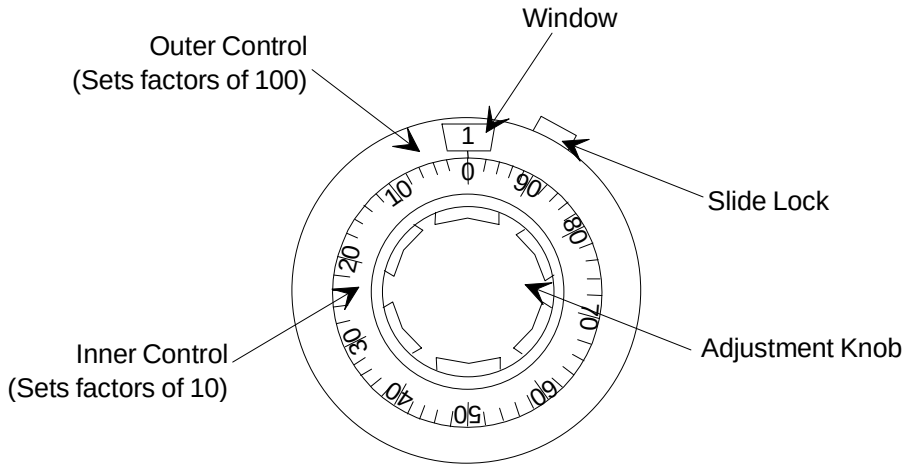

Figure 7: Scaling Control Potentiometer - Initial Setting

The outer control represents factors of 100; indicated by the numbers 0 to 10 which display in the window at the top of the potentiometer. The inner control represents factors of 10, in divisions of 2; these values are set when the appropriate value is aligned with the vertical line beneath the window. The adjustment knob cannot be turned below 0 or above the full scale setting of 1000.

Note Since the maximum number of counts the digital panel meter can read is 1999, the voltage cannot exceed 2 VDC. That is, the maximum value that can be displayed in the scaling potentiometer window is 2.

To adjust the Scaling Control Potentiometer:

- Unlock the slide lock on the right side of the control by pushing it up (counterclockwise)
- Turn the adjustment knob *clockwise* to increase the value represented on the control

  The 147 unit is typically shipped with the control set to “100”, as shown in Figure 7.
- Turn the adjustment knob *counterclockwise* to decrease the value represented on the control
- Lock the position of the control by pushing the slide lock on the right side of the control down (clockwise)

Note Refer to *How To Setup the System*, step 7, page 57, for more information and an example Scaling Control Potentiometer adjustment.

Gas Correction Factor (GCF)

A Gas Correction Factor (GCF) is used to indicate the ratio of flow rates of different gases which will produce the same output voltage from a mass flow controller. The GCF is a function of specific heat, density, and the molecular structure of the gases. Since flow controllers are usually calibrated with nitrogen, nitrogen is used as the baseline gas (GCF = 1).

Table 17, page 83, lists the gas correction factors for some commonly used pure gases. If the gas you are using is not listed in Table 17, you must calculate its GCF. The equations for calculating gas correction factors are listed in *How To Calculate the GCF for Pure Gases*, page 50, and *How To Calculate the GCF for Gas Mixtures*, page 51.

The equations for calculating the GCF assume that the MFC was calibrated at a reference temperature of 0° C (~273° K). If you want the 247 unit to read the mass flow as if the MFC was calibrated at a different reference temperature, adjust the calculated GCF value using the following equation:

$$\text{Temperature Corrected GCF} = GCF \times \frac{T_x}{T_s}$$

where:

T_X = Reference temperature (° K)

T_S = 273.15° K (~ equal to 0° C)

Note

1. When using the GCF, the accuracy of the flow reading may vary by ±5%, however, the repeatability will remain ±0.2% of FS.
2. All MKS readouts have Gas Correction Adjustment controls to provide direct readout.

How To Calculate the GCF for Pure Gases

To calculate the Gas Correction Factor for *pure* gases, use the following equation:

$$GCF_x = \frac{(0.3106)\ (s)}{(d_x)\ (cp_x)}$$

where:

GCF_X = Gas Correction Factor for gas X

0.3106 = (Standard Density of nitrogen) (Specific Heat of nitrogen)

s = Molecular Structure correction factor where S equals:

1.030 for Monatomic gases

1.000 for Diatomic gases

0.941 for Triatomic gases

0.880 for Polyatomic gases

d_X = Standard Density of gas X, in g/l (at 0° C and 760 mm Hg)

cp_X = Specific Heat of gas X, in cal/g° C

How To Calculate the GCF for Gas Mixtures

For gas mixtures, the calculated Gas Correction Factor is not simply the weighted average of each component's GCF. Instead, the GCF (relative to nitrogen) is calculated by the following equation:

$$GCF_M = \frac{(0.3106)\ (a_1 s_1 + a_2 s_2 + \ldots a_n s_n)}{(a_1 d_1 c p_1 + a_2 d_2 c p_2 + \ldots a_n d_n c p_n)}$$

where:

GCF_M = Gas Correction Factor for a gas mixture

0.3106 = (Standard Density of nitrogen) (Specific Heat of nitrogen)

a_1 and a_2 = Fractional Flow of gases 1 and 2
Note: a_1 and a_2 must add up to 1.0

s_1 and s_2 = Molecular Structure correction factor for gases 1 and 2 where S equals:

1.030 for Monatomic gases

1.000 for Diatomic gases

0.941 for Triatomic gases

0.880 for Polyatomic gases

d_1 and d_2 = Standard Densities for gases 1 and 2, in g/l (at 0° C and 760 mm Hg)

cp_1 and cp_2 = Specific Heat of gas 1 and gas 2, cal/g° C

Note

The values for s, d, and cp_x are available for most gases, refer to Table 17, page 83.

The values for a_1 and a_2 (which must add up to 1.0) are application dependent.

Example:

Calculate the GCF for a gas mixture of argon (gas 1) flowing at 150 sccm and nitrogen (gas 2) flowing at 50 sccm, where:

$a_1 = \frac{150}{200} = 0.75$ $a_2 = \frac{50}{200} = 0.25$

$s_1 = 1.030$ $s_2 = 1.000$

$d_1 = 1.782$ g/l $d_2 = 1.250$ g/l

$cp_1 = 0.1244$ cal/g ° C $cp_2 = 0.2485$ cal/g ° C

then:

$$GCF_M = \frac{(0.3106)\ [(0.75)(1.030)+(0.25)(1.000)]}{(0.75)(1.782)(0.1244)\ +(0.25)(1.250)(0.2485)}$$

$$= \frac{(0.3106)\ [(0.7725)+(0.25)]}{(0.1663)\ +(0.0777)}$$

$$= \frac{(0.3106)\ (1.0225)}{0.244}$$

$$= \frac{0.3176}{0.244}$$

$$GCF_M = 1.302$$

Labels

Serial Number Label

The Serial Number Label, located on the side of the instrument, lists the serial number and the product model number, and displays the CE mark signifying compliance with the European CE regulations.



Figure 8: Serial Number Label

The instrument model code is identified as "247D." Refer to *Appendix B: Model Code Explanation*, page 81, for more information.

This page intentionally left blank.

Chapter Four: Operation

How To Setup the System

1. Ensure that the MFCs and the 247 unit are properly installed.

   Refer to *Mounting Instructions*, page 26.

2. Set the FRONT PANEL CONTROLS (refer to Figure 5, page 40) as listed in Table 11.

Manual Flow Control - 247 Unit Front Panel Controls	
Control	**Switch Position**
Power ON/OFF Switch	OFF
Flow Control Switch (1 - 4)	OFF
Set Point Source Switch (1 - 4)	FLOW
Channel Selector	Channel 1

Table 11: Manual Flow Control - 247 Unit Front Panel Controls

3. Verify that the LINE VOLTAGE SELECTOR on the rear panel of the 247 unit is set to the proper voltage.

   Refer to *How To Set the Line Voltage*, page 31, for more information.

Caution **The Line Voltage Selector on the 247 unit must be set to the proper input voltage *before* you connect the power cord and turn on the power. Otherwise, the unit will be severely damaged.**

4. Plug the AC LINE CORD into the power line.

   For protective earthing, plug the power cord into a properly grounded outlet.

5. Connect the MFCs to the MFC Input Connectors (J1 to J4) on the rear panel (refer to Figure 6, page 43) using the proper interface cables. If more than 4 channels are required, add an additional 247 unit to your system.

   The system interface cables are listed in Table 5, page 20.

Note An extra power supply is needed if using more than two 1559 MFCs with one 247 unit.

6. Calculate the SCALING CONTROL FACTOR for *each* MFC in use.

   The Scaling Control Factor specifies how much the +5 VDC output signal from the MFC will be scaled down so that the flow rate can be read directly from the Digital Panel Meter, which reads 1 VDC as 1000 counts full scale.

Note 

It is ***critical*** for proper system operation that the Scaling Control Factors are calculated properly. Refer to *Scaling Controls*, page 46, for more information.

   a. The *Scaling Control Factor* is the product of the Gauge Factor for the MFC in use and the Gas Correction Factor for the gas in use:

      SCALING CONTROL FACTOR = GAUGE FACTOR x GAS CORRECTION FACTOR

   b. The *Gauge Factor* is a factory set value which scales the 5 VDC signal to the appropriate full scale range for the MFC, so that the digital panel meter reads 1000 counts. The gauge factors for various flow ranges are listed in Table 10, page 47.

   c. The *Gas Correction Factor (GCF)* is used to indicate the ratio of flow rates of different gases which will produce the same output voltage from a mass flow controller. The GCF is a function of specific heat, density, and the molecular structure of the gases. Since flow controllers are usually calibrated with nitrogen, nitrogen is used as the baseline gas (GCF = 1). Refer to Table 17, page 83, for a list of GCFs for commonly used pure gases.

      If the pure gas you are using is not listed in Table 17, page 83, or you are using a gas mixture, you must calculate its GCF. Refer to *Gas Correction Factor (GCF)*, page 49, for more information.

Example:

To calculate the Scaling Control Factor for a 20 sccm MFC, which is flowing pure argon gas, multiply the Gauge Factor for argon (200), listed in Table 10, page 47, times the Gas Correction Factor for argon (1.44), listed in Table 17, page 83:

SCALING CONTROL FACTOR = GAUGE FACTOR x GAS CORRECTION FACTOR

= 200 x 1.44

= 288

Since the full scale setting of the Scaling Control Potentiometer is 1000, the Scaling Control Factor of 288 is 28.8% of FS.

7. Adjust the SCALING CONTROL POTENTIOMETER for *each* MFC in use.

   The Scaling Control Potentiometers set the values of the Scaling Control Factors.

Note It is ***critical*** for proper system operation that the Scaling Control Potentiometers are set correctly. Refer to *Scaling Controls*, page 46, for more information.

The outer control represents factors of 100; indicated by the numbers 0 to 10 which display in the window at the top of the potentiometer. The inner control represents factors of 10, in divisions of 2; these values are set when the appropriate value is aligned with the vertical line beneath the window. The adjustment knob cannot be turned below 0 or above the full scale setting of 1000.

To adjust the Scaling Control Potentiometer to the setting of "288" calculated in the example in step 6, page 56:

a. Unlock the slide lock on the right side of the control by pushing it up (counterclockwise).

b. Turn the adjustment knob clockwise until the "2" appears in the window.

c. Continue turning the adjustment knob until the line on the inner control which represents "88" is aligned with the vertical line beneath the window, as shown in Figure 9.

d. Lock the position of the control by pushing the slide lock on the right side of the control down (clockwise).

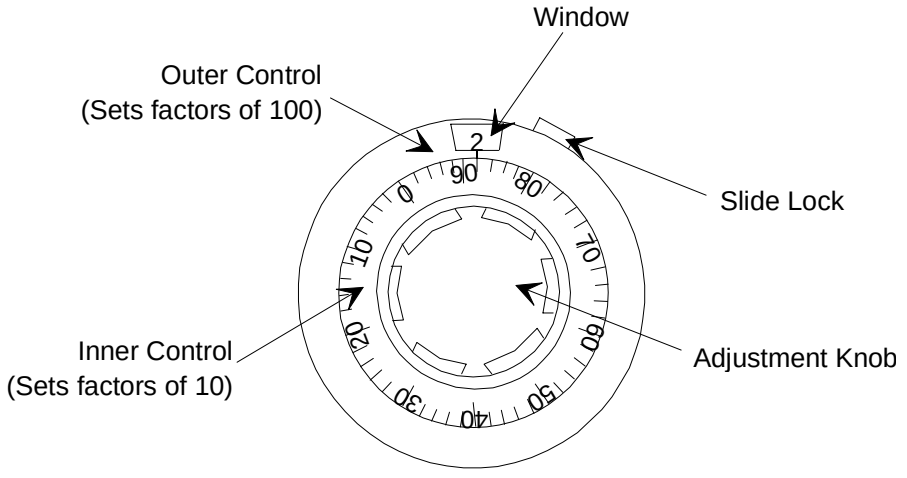

Figure 9: Scaling Control Potentiometer - Example Setting
(Set to "288")

8. Turn the POWER SWITCH ON to apply power to the 247 unit and the attached MFCs.

Note Allow the MFCs to warm up for a period of 1 hour prior to any zero adjustments. Best performance is achieved when the MFCs are powered continuously.

9. Set the DECIMAL POINT for Channel 1.

   Insert a screwdriver blade into the slot of the DECIMAL POINT SELECTOR SWITCH for Channel 1 and rotate it clockwise (CW) until the desired decimal point is illuminated on the Digital Meter Display.

   The Decimal Point Selector Switches are mounted on the rear panel (refer to Figure 6, page 43); the channels that they control are screened below the switch. The position of the decimal point is determined by the full scale range of the MFC in use. For example, a 100 sccm mass flow controller requires the decimal point to be positioned as “100.0” (display at full rated flow).

10. Adjust the ZERO CONTROL for each MFC until the Digital Panel Meter displays a reading of ± 000.

    If the zero control lacks the range for this adjustment, center it and use the zero control on the MFC to bring the reading within the range of the 247 unit’s zero control.

Manual Flow Control

Manual control of the flow rate through MFCs in an *individual* or *ratioed* mode is accomplished using the system configuration shown in Figure 3, page 27.

Note Ensure the MFCs and the 247 unit are properly configured as described in *How To Setup the System*, page 55.

How To Manually Control Individual Gas Flows

This mode of operation enables you to control individual gas flows using an internal set point signal.

1. Move the CHANNEL SELECTOR to position 1.

2. Ensure the SET POINT SOURCE SWITCH is set to the FLOW position.

   This connects an internal +5 V reference to the top of the SET POINT CONTROL. Since the +5 V corresponds to full rated flow, each Set Point Control can be adjusted up to a maximum of 100% for the attached MFCs rated flow.

3. Adjust the SET POINT for the MFC.

   Hold the READ/SET POINT SWITCH in the SET POINT position and turn the SET POINT CONTROL to the desired level as displayed on the Digital Panel Meter. When the adjustment is complete, release the READ/SET POINT SWITCH; it is spring loaded and will return to the READ (Flow) position.

   Since the Digital Panel Meter is driven from the scaled output, the displayed value has the Gas Correction and Gauge Factors applied. *Therefore, it represents the actual set point in sccm for the attached MFC*. Refer to *Scaling Controls*, page 46, for more information.

4. Move the CHANNEL SELECTOR to the next channel position that has an MFC connected to it, and repeat steps 2 and 3 until the set points for all channels with MFCs attached have been properly set.

5. Return the CHANNEL SELECTOR to the channel that you wish to monitor.

   The system is now completely adjusted to set the flow of each MFC.

6. Turn the flow ON by placing the FLOW CONTROL SWITCH to the ON position.

   The set point signal is applied to the MFC, the Flow Indicator LED illuminates, and flow begins after a slight delay. The correct flow is realized within approximately 1.5 seconds, depending on the type of MFC being used.

Note 

The flow through any channel can be displayed on the Digital Panel Meter by placing the Channel Selector Switch to that channel.

7. Turn the flow OFF by placing the FLOW CONTROL SWITCH to the OFF position.

How To Manually Control Ratioed Gas Flows

This mode of operation enables you to control the individual flow rates of Channels 2 to 4 as a fraction of the flow of Channel 1, using an internal set point signal. The set point signal is controlled by the Transducer Output of Channel 1.

If more than three channels are to be ratioed to Channel 1, a second 247 unit is required. The second 247 unit must be connected to Channel 1 of the first 247 unit, and its S15 dipswitch must be set for External Ratio Control. Refer to *How To Change the Dipswitch Settings*, page 64, for more information.

Note The MFC that is set to control at the highest percentage of its rated flow should be connected to Channel 1.

In the following example, we will assume a system with four 100 sccm MFCs flowing nitrogen (N_2) gas. Channels 2 to 4 will be set to a ratio of 75, 50, and 25% of the flow in Channel 1.

1. Set the SET POINT SOURCE SWITCHES for Channels 1 to 4 to the FLOW position.

   This connects an internal +5 V reference to the top of the SET POINT CONTROL. Since the +5 V corresponds to full rated flow, each Set Point Control can be adjusted up to a maximum of 100% for the attached MFCs rated flow.

2. Adjust the SET POINT for *each* MFC.

   Hold the READ/SET POINT SWITCH in the SET POINT position and turn the SET POINT CONTROL for each MFC to the level shown in Table 12, as displayed on the Digital Panel Meter.

Ratio Control Set Point Levels	
Set Point Control	**Level (SCCM)**
Channel 1	0 to 100
Channel 2	75
Channel 3	50
Channel 4	25

Table 12: Ratio Control Set Point Levels

When the adjustment is complete, release the READ/SET POINT SWITCH; it is spring loaded and will return to the READ (Flow) position.

Since the Digital Panel Meter is driven from the scaled output, the displayed value has the Gas Correction and Gauge Factors applied. *Therefore, it represents the actual set point in sccm for the attached MFC*. Refer to *Scaling Controls*, page 46, for more information.

3. Leave the SET POINT SOURCE SWITCH for Channel 1 in the FLOW position and move the switches for Channels 2 to 4 to the RATIO position.

   The 247 unit is now adjusted to control the MFCs connected to Channels 2 through 4 to 75, 50, and 25% of the flow rate through Channel 1.

4. Turn the flow on by placing the FLOW CONTROL SWITCH for all channels to the ON position.

   The set point signal is applied to the MFC, the Flow Indicator LED illuminates, and flow begins after a slight delay. The correct flow is realized within approximately 1.5 seconds, depending on the type of MFC being used.

Note 

The flow through any channel can be displayed on the Digital Panel Meter by placing the Channel Selector Switch to that channel.

5. Turn the flow off by placing the FLOW CONTROL SWITCH for all channels to the OFF position.

External Flow Control

External control of the flow rate through MFCs in either an individual or ratioed mode is accomplished using the system configuration shown in Figure 4, page 28.

Note Ensure the MFCs and the 247 unit are properly configured as described in *How To Setup the System*, page 55.

This mode of operation enables you to control individual gas flows using a set point signal from an external controller, or to ratio gas flows based on a set point signal from an external controller and measurements from a pressure transducer. In either case, the set point signal is controlled by the output of the external controller signal, the *External Ratio Amplifier*, rather than the Transducer Output of Channel 1.

The 247 unit is initially configured so that the set point signal is based on the Transducer Output of Channel 1. In order to use external flow control, you must change the source of the set point signal to the External Ratio Amplifier by changing the settings in the 4-position dipswitch (S15) located at the rear of the Main PC board. The External Ratio Amplifier will accept signals corresponding to a full scale voltage of +5 V or +1 V, depending on the configuration of the dipswitch. Refer to *How To Change the Dipswitch Settings*, page 64, for more information.

If more than three channels are to be ratioed to Channel 1, a second 247 unit is required. The second 247 unit must be connected to Channel 1 of the first 247 unit, and its S15 dipswitch must also be set for External Ratio Control.

Note Any controller and pressure transducer may be used provided the signal that enters the 247 unit goes *positive* with increasing flow (correct polarity). Throughout this manual, the MKS Type 250 Pressure/Flow Controller and Type 127/227 Baratron Pressure Transducers are used for example only.

How To Change the Dipswitch Settings

The External Ratio Amplifier will accept signals corresponding to a full scale voltage of +5 V or +1 V. Configuring dipswitch S15 to the settings listed in Table 14, page 64, or Table 15, page 65, configures the RATIO position on all of the SET POINT SOURCE SWITCHES to be driven by the output of the External Ratio Amplifier, rather than the +5 V internal reference.

The 247 unit is initially configured so that the set point signal is based on the Transducer Output of Channel 1, with dipswitch S15 set as listed in Table 13.

Dipswitch S15 Initial Settings	
Dipswitch	**Position**
1	Closed (On)
2	Open (Off)
3	Open (Off)
4	Open (Off)

Table 13: Dipswitch S15 Initial Settings

To change the dipswitch settings for external set point control:

1. Remove the retaining screws and the top cover of the 247 unit.
2. Locate the Main PC board.
3. Locate the 4-position dipswitch (S15) at the rear of the Main PC board.
4. To configure the 247 unit to accept +5 V full scale input, set dipswitch S15 to the positions listed in Table 14.

Dipswitch S15 Settings for +5 V Full Scale Input	
Dipswitch	**Position**
1	Open (Off)
2	Closed (On)
3	Open (Off)
4	Open (Off) (amplifier is set to unity gain)

Table 14: Dipswitch S15 Settings for +5 V Full Scale Input.

5. To configure the 247 unit to accept +1 V full scale input, set dipswitch S15 to the settings listed in Table 15.

Dipswitch S15 Settings for +1 V Full Scale Input	
Dipswitch	**Position**
1	Open (Off)
2	Closed (On)
3	Open (Off)
4	Closed (On) (amplifier is set to a gain of 5)

Table 15: Dipswitch S15 Settings for +1 V Full Scale Input.

6. Replace the top cover and the retaining screws.

7. Connect the pressure transducer to the controller using the proper cable.

   The system interface cables are listed in Table 5, page 20.

8. Perform the steps described in *How To Setup the System*, page 55, to prepare the 247 unit and MFCs for flow control.

How To Control Individual Gas Flows with an External Controller

This mode of operation enables you to control individual gas flows using a set point signal from an external controller. The 0 to 5 VDC set point signal is received at Interface Connector P6, and is routed by the SET POINT SOURCE SWITCH to each MFC. Its application to the MFC is the same as that described in *How To Manually Control Individual Gas Flows,* page 59.

Note that each channel has its own external set point line. Any or all channels may have their set points or flow driven from the external source.

How To Control Pressure with Ratioed Gas Flows

In this type of operation, the pressure in a chamber is maintained by controlling the ratio of gas flows, based on a set point signal from an external controller and measurements from a pressure transducer. More than four gases may be controlled by adding a second 247 unit to the system.

The pressure in the chamber is measured by the transducer which produces a DC output which is proportional to the pressure. This output is applied to the controller where it is compared with the pressure set point level. The 247 unit receives the pressure control signal (PCS) from the controller as an external ratio signal to produce the gas flow necessary to achieve the required pressure.

The PCS voltage enters the 247 unit through Interface Connector P5. It is routed to the RATIO position of the SET POINT SOURCE SWITCH, where it functions the same as that described in *How To Manually Control Ratioed Gas Flows*, page 61.

Note that any or all channels may be used to flow gas to maintain pressure with a preset ratio of flows. Any channel that is not used this way may be used independently.

How To Setup the Controller for Pressure Control

Any controller that provides a positive signal with increasing flow (correct polarity) may be used; the MKS Type 250 Pressure/Flow Controller is used for example only.

1. Verify that the LINE VOLTAGE SELECTOR SWITCH on the 250 controller is set to the proper voltage.

2. Set the FRONT PANEL CONTROLS on the 250 controller as listed in Table 16.

External Controller - Front Panel Controls	
Control	**Position**
Power Switch	OFF
INT/EXT	INT
10V/1V/.1V	10V
Phase Lead	1.5 SEC
Gain	20%
Bias	Fully CCW
CMAE	Manual
Manual Control	500 out of 1000
Set Point Level	Required pressure level

Table 16: External Controller - Front Panel Controls

The settings in Table 16 configure the controller to deliver a constant Pressure Control Signal (PCS) of approximately +5 V to the 247 unit's External Ratio Amplifier. This manually produced signal is used to determine if the required pressure and flow rates can be achieved using a PCS with a nominal value of +5 V. *Best control performance is achieved when the PCS is kept high for a good signal to noise ratio.*

3. Plug the AC LINE CORD into the power line and turn on the power switch.

Note  Allow the controller to warm-up for at least 1½ hours before adjusting the zero.

4. Pump the chamber down below the resolution of the transducer and adjust the zero for a reading of ±0000 on the controller's Digital Panel Meter.

   On controllers without a DPM, adjust the Set Point Control to zero and adjust for a zero reading on the Error Meter.

How To Setup the 247 Unit for Pressure Control

1. Place the SET POINT SOURCE SWITCHES on all channels of the 247 unit with an MFC attached to the RATIO position.

2. Place the FLOW CONTROL SWITCHES on all channels with an MFC attached to the ON position.

   This produces flow through all the MFCs.

3. Adjust the flow rate for each channel with the 247 unit's SET POINT CONTROL to achieve the desired flow rate and ratio between the channels and the desired pressure (within a factor of 2) in the chamber.

   The flow rate displays on the Digital Panel Meter which is controlled with the CHANNEL SELECTOR SWITCH.

4. Read the chamber pressure on the controller's Digital Panel Meter.

   To read pressure on a controller without a meter, adjust the controller's set point until the error meter reads zero, then multiply the Set Point reading times the Full Scale of the transducer (1000 counts = full scale). When the pressure is within the desired 2 to 1 range, the system is ready for automatic control.

   If the pressure cannot be adjusted to within the factor of 2, then modification of the system may be necessary.

   - Too high of a pressure requires increased pumping capacity or smaller MFCs for less total flow
   - Too low of a pressure requires reduced pumping capacity or larger MFCs for greater total flow

5. Move the CMAE switch on the controller to the AUTO position.

Note 

The controller will vary the pressure control signal to adjust the total flow to achieve the control pressure. Although the total flow rate will change, the *ratio* between the gases will remain constant.

6. Adjust the controller's GAIN and PHASE LEAD settings as needed.

   The controller settings listed in Table 16, page 67, are used as a starting point for control. These settings should be properly tuned to provide accurate control, free from oscillations. Refer to the appropriate instruction manual for complete tuning information.

Remote Flow Control

Note Ensure the MFCs and the 247 unit are properly configured as described in *How To Setup the System*, page 55.

Interface connector P6 provides the means to remotely turn the flow on/off and to adjust and monitor the flow rate in any channel using a set point signal from a voltage applied to P6. Refer to Table 7, page 32, for the pinout for Interface connector P6.

How To Control Gas Flow with TTL Logic

TTL logic control provides a way to use only a simple voltage level to control the flow rate. You can create a custom interface by wiring the required control signals to the appropriate pins on Connector P6. Refer to Table 7, page 32, for the Interface connector P6 pinout.

When the FLOW CONTROL SWITCH (refer to Figure 5, page 40) is placed in the REMOTE position, a logic signal coming in through the Interface connector P6 may be used to gate the set point signal to the MFC. A logic low turns the flow on; a logic high turns the flow off.

To use TTL logic control:

1. Follow the instructions in *How To Setup the System*, page 55, to prepare the 247 and the MFCs for flow control.

2. Place the SET POINT SOURCE switches on all channels with a MFC attached to the EXT position.

3. Place the FLOW CONTROL SWITCHES on all channels with a MFC attached to the REM position.

4. Apply the control signals through Interface connector P6.

   For example:

   a. To produce a flow of 50 sccm through a 100 sccm MFC connected to Channel 1, apply a +2.5 V signal to pin 4 on connector P6. Reference this voltage to pin 1 on connector P6.

   b. Attach a TTL signal to pin 12 on connector P6. Reference this signal to pin 8 on connector P6.

   c. Turn on the flow by applying a TTL low (0.4 to 0.8 V) to pin 12 on connector P6.

   d. Turn off the flow by applying a TTL high (2.4 to 5 V) to pin 12 on connector P6 or an open circuit.

This page intentionally left blank.

Chapter Five: Maintenance and Troubleshooting

General Information

If the 247 controller fails to operate properly upon receipt, check for shipping damage, and check the cables for proper continuity. Any damage should be reported to the carrier and MKS Instruments immediately. If it is necessary to return the unit to MKS, obtain an ERA number (Equipment Return Authorization Number) from a MKS Service Center before shipping. Please refer to the inside back cover of this manual for a list of MKS Calibration and Service Centers.

Maintenance

Periodically check for wear on the cables and inspect the enclosure for visible signs of damage.

How To Clean the Unit

Periodically wipe down the unit with a damp cloth.

How To Replace the Fuses

The line fuses protect the internal circuitry; both sides of the line are fused.

Caution  **Disconnect the power cord from the 247 unit *before* you replace the fuse, to avoid any damage.**

1. Select the proper fuses. Refer to Table 6, page 30, for the fuse values.
2. Disconnect the power cord from the 247 instrument.

Warning  **To avoid an electrical shock, be sure to disconnect the power cord *before* proceeding.**

3. Disconnect all cables from the connectors located at the back of the unit.

4. Insert a small, flat head screw driver under the top side of the black plastic cover and firmly pull towards you to unsnap the cover.

   The cover is attached firmly, so it requires a strong force on the screw driver to loosen it. The cover will flip open to expose the line voltage selector drum and the two fuse carriers. The two fuse carriers are marked with arrows (➧).

5. Carefully slide the fuse carrier out and remove the fuse.

6. Insert the new fuse into the fuse carrier.

   Be certain that the new fuse is the appropriate type for the line voltage selection.

7. Slide the fuse carrier back into the Power Entry module.

8. Close the Power Entry module cover.

9. Connect any cables removed from the back of the 247 instrument in step 3 above.

10. Connect the power cord.

Troubleshooting

The first approach when dealing with a problem with the 247 unit is to isolate the section of the instrument where the fault lies. The 247 readout can be separated into the following sections:

- Power Supply
- Channel Amplifiers
- Internal +5 V Voltage Reference
- External Ratio Amplifier
- Digital Panel Meter
- Set Point Buffer and Flow Switching Circuit

Since a problem in the Power Supply will effect the performance of all sections, it is important to begin troubleshooting at this location.

Power Supply

1. Measure the ± supplies at the power supply jumpers on the PC board; reference to the TP1 ground, located in the center of the Main PC board.

   The voltages should be within the range of 14.8 to 15.2 Volts and the AC ripple should be < 10 mV P-P. If the voltages are within range, proceed to step 4. If the voltages are not within the acceptable range, proceed to step 2.

2. Disconnect the MFCs from the rear panel, one at a time.

   Should the supplies recover when an MFC is removed, then either the cable or the MFC is defective.

3. Isolate the power supply jumpers from the circuits in the 247 unit by disconnecting the power supply jumpers and measuring the supplies on the supply side.

Caution  ***Disconnect BOTH SUPPLIES*** **to perform this test. Do not run the circuits with only one supply operative.**

4. If the power supply is operating normally, proceed to *Channel Amplifiers*, page 74, to examine the signal path through the channel amplifiers.

Channel Amplifiers

To test a channel:

1. Plug an external connector with a jumper wire connected between pins 2 and 8, into the appropriate Channel Input Connector.

   This connects the output of the set point buffer to the input of the channel.

2. Connect a voltmeter to the jumper wire and reference the meter to the TP1 ground, located in the center of the Main PC board.

3. Ensure that the channel's FLOW CONTROL SWITCH is on.

4. Place the SET POINT SOURCE SWITCH to the FLOW position.

5 Adjust the SET POINT CONTROL to produce a +5 V reading on the voltmeter.

   If you cannot adjust the SET POINT CONTROL to produce a + 5V reading, proceed to *Internal +5 V Voltage Reference*, page 75.

6. Turn the Zero Pot 25 turns counterclockwise (CCW) and then 12 turns clockwise (CW) to center it.

7. Set the SCALING CONTROL to 100 (10% of FS).

   The DPM should display +1000, ±15 counts.

Internal +5 V Voltage Reference

In the event that the voltage output from the internal +5 V source is not correct, measure the input to the source.

1. Connect the high side of the voltmeter to the junction of R67 and VR1, located on the rear of the Main PC board.

2. Reference the meter to the TP1 ground, located in the center of the Main PC board.

   The proper input voltage is +1.23 to +1.25 Volts. With this input, the potentiometer R66, located on the rear of the Main PC board, can be adjusted to produce a +5 V output (actually, factory set to +5.1 V).

An incorrect input voltage may be caused by a defective reference VR1. An incorrect output may be caused by a defective amplifier U9A, also located on the rear of the Main PC board. Contact MKS Instruments for assistance.

External Ratio Amplifier

Failure of the 247 unit to work properly with an external voltage being used as a ratio signal may be caused by a defective amplifier or by an incorrect setting on dipswitch S15.

The external ratio amplifier accepts signals corresponding to a full scale voltage of +5 V or +1 V, controlled by the settings in dipswitch S15 on the Main PC board. For a +5 V full scale input, ensure that dipswitch S15 is configured as listed in Table 14, page 64. For a +1 V full scale input, ensure that dipswitch S15 is configured as listed in Table 15, page 65. Refer to *How To Change the Dipswitch Settings*, page 64, for more information.

The input voltage required to produce the +5 V or +1 V output is applied to the 247 unit through pin 7 on Interface connector P5. Both the input voltage and the meter measuring the output should be referenced to pin 1 on Interface connector P5. Refer to Table 8, page 33, for the complete pinout of Interface connector P5.

Digital Panel Meter

The Digital Panel Meter (DPM) is a 3½ digit, 2 V full scale device. The meter is powered by a +5 V supply located on the Main PC board.

To measure the supply voltage to the meter:

1. Connect a voltmeter to the +5 V supply jumper on the Main PC board.
2. Reference the meter to the TP1 ground, located on the center of the Main PC board.

   The voltage should be between +4.7 and +5.3 Volts.
3. Setup Channel 1 for +1 V output.

   Refer to *How To Change the Dipswitch Settings*, page 64.
4. Ensure that the CHANNEL SELECTOR is on position 1.
5. Measure the output of the channel on pin 2 of Interface connector P5.

   The voltage on the DPM should match the voltmeter reading from pin 2 of Interface connector P5, ±1 count. If it does not, you must adjust the span pot on the right rear of the DPM until the readings agree. To access the span pot you must remove the top cover of the 247 unit; proceed to step 6.
6. Remove the two screws on the top corners of the rear panel of the 247 unit and slide the top cover towards the back of the unit until the entire digital panel meter box is visible.
7. Adjust the span pot on the rear of the DPM with a small flathead screwdriver until the meter reading agrees with the voltmeter reading from pin 2 of Interface connector P5, ±1 count.

   If the range of this adjustment is insufficient to bring the two meter readings into agreement, the DPM must be replaced.
8. Slide the top cover back into position and replace the two screws on the rear panel to secure it in place.

Set Point Buffer and Flow Switching Circuit

The buffer amplifier prevents the Flow Controller from loading the set point signal. The voltage at the output of the second set point buffer should track the voltage on the arm of the Set Point Control by ±2 mV when the flow is on. If this signal is incorrect at the Channel Input Connector, trace the signal back to the Set Point Control to determine where the fault lies.

A negative voltage (approximately - 0.1 V) at the Channel Input Connector indicates that the field effect transistor (FET) is ON. If the Flow Lamp is on, then the FET is defective or the drive to the gate is incorrect. The drive under these conditions should be -15 V ±1 V.

This page intentionally left blank.

Appendix A: Product Specifications

CE Compliance	
Electromagnetic Compatibility[1]	EMC Directive 89/336/EEC
Low-Voltage Requirements	Low-Voltage Directive 73/23/EEC
Installation Category	II, according to EN 61010-1
Pollution Degree	2, according to IEC 664
Product Safety and Liability	Product Safety Directive 92/59/EEC
Display Accuracy	±0.1% ± 1 digit
Flow Display	3 ½ Digit Display (+1.999 maximum)
Fuse Ratings	
115 VAC 230 VAC	0.8 A (T) / 250 V 0.4 A (T) / 250 V
MFC Capacity	4; 1 MFC per channel, sequentially selectable
Operating Temperature	15° to 40° C (59° to 104° F)
Package	½ Rack (9.5” W x 3.5” H x 9” D)
Power Consumption	19 VA @ 115 VAC 60 Hz with no MFCs attached *Additional* 15 VA for start-up and 10 VA operational for *each* MFC attached
Power Requirement	
115 VAC Setting 230 VAC Setting	100 to 120 VAC nominal, 50/60 Hz 200 to 240 VAC nominal, 50/60 Hz
Power Supply Output Capacity	±15 VDC @ 1 Ampere Maximum ripple < 10 mV P-P
Set Point Adjust *(each channel)*	0.1 to 100% of Full Scale (flow) 0.1 to 100% of Input level (ratio)

[1]An overall metal braided shielded cable, properly grounded at both ends, is required during use.

Signal Inputs *(each channel)*	
MFC	0 to +5 VDC (5.5 V maximum)
Scaling (GCF)	0.1 to 4.0
External Set Point (bypasses on-board set point controls)	0 to 5 VDC
External ON/OFF	TTL Compatible
Signal Outputs *(each channel)*	
MFC Output(s)	Minimum load impedance; 10K ohm/channel
Unscaled Transducer Output	0 to +5 VDC
Scaled (Corrected) Transducer Output	0 to +1 VDC Nominal (scaled with a rear panel scaling control); 0 to 2 VDC maximum
Weight	8.5 lbs. (3.85 kg)
Zero Correction *(each channel)*	± 3% of Full Scale

Due to continuing research and development activities, these product specifications are subject to change without notice.

Appendix B: Model Code Explanation

Model Code

The model code is identified as follows:

247D

Type Number (247D)

The type number 247D designates the model number of the instrument.

This page intentionally left blank.

Appendix C: Gas Correction Factors for Commonly Used Pure Gases

Table 17 lists the gas correction factors for some commonly used pure gases. If the GCF for your gas is not listed, or you are using a gas mixture, you must calculate the GCF. Refer to Gas Correction Factor (GCF), page 49, for more information.

Gas Correction Factors for Pure Gases				
GAS	**SYMBOL**	**SPECIFIC HEAT, Cp cal/g^{o}C**	**DENSITY g/l @ 0°C**	**CONVERSION FACTOR**
Air	- - -	0.240	1.293	1.00
Ammonia	NH_3	0.492	0.760	0.73
Argon	Ar	0.1244	1.782	1.39[1]
Arsine	AsH_3	0.1167	3.478	0.67
Boron Trichloride	BCl_3	0.1279	5.227	0.41
Bromine	Br_2	0.0539	7.130	0.81
Carbon Dioxide	CO_2	0.2016	1.964	0.70[1]
Carbon Monoxide	CO	0.2488	1.250	1.00
Carbon Tetrachloride	CCl_4	0.1655	6.86	0.31
Carbon Tetraflouride (Freon - 14)	CF_4	0.1654	3.926	0.42
Chlorine	Cl_2	0.1144	3.163	0.86
Chlorodifluoromethane (Freon - 22)	$CHClF_2$	0.1544	3.858	0.46
Chloropentafluoroethane (Freon - 115)	C_2ClF_5	0.164	6.892	0.24
Chlorotrifluoromethane (Freon - 13)	$CClF_3$	0.153	4.660	0.38
Cyanogen	C_2N_2	0.2613	2.322	0.61
Deuterium	D_2	1.722	0.1799	1.00
Diborane	B_2H_6	0.508	1.235	0.44
Dibromodifluoromethane	CBr_2F_2	0.15	9.362	0.19
Dichlorodifluoromethane (Freon - 12)	CCl_2F_2	0.1432	5.395	0.35

Table 17: Gas Correction Factors for Pure Gases
(Continued on next page)

Gas Correction Factors for Pure Gases *(Continued)*				
GAS	**SYMBOL**	**SPECIFIC HEAT, Cp cal/g^{o}C**	**DENSITY g/l @ 0°C**	**CONVERSION FACTOR**
Dichlorofluoromethane (Freon - 21)	$CHCl_2F$	0.140	4.592	0.42
Dichloromethysilane	$(CH_3)_2SiCl_2$	0.1882	5.758	0.25
Dichlorosilane	SiH_2Cl_2	0.150	4.506	0.40
1,2-Dichlorotetrafluoroethane (Freon - 114)	$C_2Cl_2F_4$	0.160	7.626	0.22
1,1-Difluoroethylene (Freon - 1132A)	$C_2H_2F_2$	0.224	2.857	0.43
2,2-Dimethylpropane	C_5H_{12}	0.3914	3.219	0.22
Ethane	C_2H_6	0.4097	1.342	0.50
Fluorine	F_2	0.1873	1.695	0.98
Fluoroform (Freon - 23)	CHF_3	0.176	3.127	0.50
Freon - 11	CCl_3F	0.1357	6.129	0.33
Freon - 12	CCl_2F_2	0.1432	5.395	0.35
Freon - 13	$CClF_3$	0.153	4.660	0.38
Freon - 13 B1	$CBrF_3$	0.1113	6.644	0.37
Freon - 14	CF_4	0.1654	3.926	0.42
Freon - 21	$CHCl_2F$	0.140	4.592	0.42
Freon - 22	$CHClF_2$	0.1544	3.858	0.46
Freon - 23	CHF_3	0.176	3.127	0.50
Freon - 113	$C_2Cl_3F_3$	0.161	8.360	0.20
Freon - 114	$C_2Cl_2F_4$	0.160	7.626	0.22
Freon - 115	C_2ClF_5	0.164	6.892	0.24
Freon - 116	C_2F_6	0.1843	6.157	0.24
Freon - C318	C_4F_8	0.185	8.397	0.17
Freon - 1132A	$C_2H_2F_2$	0.224	2.857	0.43
Helium	He	1.241	0.1786	.- - -2
Hexafluoroethane (Freon - 116)	C_2F_6	0.1843	6.157	0.24

Table 17: Gas Correction Factors for Pure Gases
(Continued on next page)

Gas Correction Factors for Pure Gases *(Continued)*				
GAS	**SYMBOL**	**SPECIFIC HEAT, Cp cal/g^{o}C**	**DENSITY g/l @ 0°C**	**CONVERSION FACTOR**
Hydrogen	H_2	3.419	0.0899	.- - -2
Hydrogen Bromide	HBr	0.0861	3.610	1.00
Hydrogen Chloride	HCl	0.1912	1.627	1.00
Hydrogen Fluoride	HF	0.3479	0.893	1.00
Isobutylene	C_4H_8	0.3701	2.503	0.29
Krypton	Kr	0.0593	3.739	1.543
Methane	CH_4	0.5328	0.715	0.72
Methyl Fluoride	CH_3F	0.3221	1.518	0.56
Molybdenum Hexafluoride	MoF_6	0.1373	9.366	0.21
Neon	Ne	0.246	0.900	1.46
Nitric Oxide	NO	0.2328	1.339	0.99
Nitrogen	N_2	0.2485	1.250	1.00
Nitrogen Dioxide	NO_2	0.1933	2.052	- -[2]
Nitrogen Trifluoride	NF_3	0.1797	3.168	0.48
Nitrous Oxide	N_2O	0.2088	1.964	0.71
Octafluorocyclobutane (Freon - C318)	C_4F_8	0.185	8.937	0.17
Oxygen	O_2	0.2193	1.427	1.00[3]
Pentane	C_5H_{12}	0.398	3.219	0.21
Perfluoropropane	C_3F_8	0.194	8.388	0.17
Phosgene	$COCl_2$	0.1394	4.418	0.44
Phosphine	PH_3	0.2374	1.517	0.76
Propane	C_3H_8	0.3885	1.967	0.36
Propylene	C_3H_6	0.3541	1.877	0.41
Silane	SiH_4	0.3189	1.433	0.60
Silicon Tetrachloride	$SiCl_4$	0.1270	7.580	0.28
Silicon Tetrafluoride	SiF_4	0.1691	4.643	0.35
Sulfur Dioxide	SO_2	0.1488	2.858	0.69

Table 17: Gas Correction Factors for Pure Gases
(Continued on next page)

Gas Correction Factors for Pure Gases *(Continued)*

GAS	SYMBOL	SPECIFIC HEAT, Cp cal/g^{o}C	DENSITY g/l @ 0°C	CONVERSION FACTOR
Sulfur Hexafluoride	SF_6	0.1592	6.516	0.26
Trichlorofluoromethane (Freon - 11)	CCl_3F	0.1357	6.129	0.33
Trichlorosilane	$SiHCl_3$	0.1380	6.043	0.33
1,1,2-Trichloro - 1,2,2-Trifluoroethane (Freon - 113)	CCl_2FCClF_2 or ($C_2Cl_3F_3$)	0.161	8.360	0.20
Tungsten Hexafluoride	WF_6	0.0810	13.28	0.25
Xenon	Xe	0.0378	5.858	1.32

[1]Empirically defined.

[2]Consult MKS Instruments, Inc. for special applications.

[3]The GCF for Oxygen is 0.993 when using *thermal* MFCs such as the Type 1179, 1479, 1679, 1159, and 1259 units, and related products. The GCF for Oxygen is 1.000, as listed in the table, for pressure based MFCs such as the Type 1640, 1150, 1151, 1152, and 1153 units.

NOTE: Standard Pressure is defined as 760 mmHg (14.7 psia).
Standard Temperature is defined as 0°C

Table 17: Gas Correction Factors for Pure Gases

Index

A

AC line cord, 44

C

Cables
- CE requirements, 20, 22
- ordering, 32
- part numbers, 20

CE mark
- cables, 20, 22
- description of, 20
- specifications, 79

Connectors
- interface P5 (channel 1), 33
- interface P6 (channels 1 to 4), 32
- MFC (J1 to J4), 34

Controller
- setup, 67
- zero adjustment, 67

Customer support, 18

D

Dipswitch S15
- +1 V FS input, 65
- +5 V FS input, 64
- initial settings, 64

E

Electrical information
- fuses, 30, 71

External flow control
- controller setup, 67
- individual gas flows, 28, 38, 66
- ratioed gas flows, 28, 66–68, 38, 66–68
- system setup, 68

F

Front panel controls, 40–42

Fuses, 30, 71

G

Gas correction factors
- description of, 47, 49
- gas mixtures, 51
- list of, 83–86
- pure gases, 50
- reference temperature, 49

Gauge factors, 47, 56

I

Installation Category, 23

L

Line voltage, 44

M

Maintenance, 71

Manual flow control
- individual gas flows, 27, 37, 59, 63
- ratioed gas flows, 27, 37, 61–62

Manual, organization of, 18

Model code, 81

Mounting instructions
- 247 unit, 26
- MFCs, 26

O

Operation
- flow signal path, 35
- functional description, 35

P

PCS, 67
Pollution Degree, 23
Power requirements, 26, 44, 79

R

Ratio, gas, 66
Rear panel controls, 43–45
Remote flow control
- TTL logic control, 29, 69

Returning the product, 18, 19

S

Safety messages, definitions of
- english, 1
- french, 9
- german, 5
- spanish, 13

Safety procedures and precautions
- english, 3–4
- french, 11–12
- german, 7–8
- spanish, 15–16

Scaling controls
- description of, 46–48
- scaling control factor, 47, 56
- scaling control potentiometer, 48, 57

Serial number label, 53
Set point signal source, 36
Specifications, 79–80
Symbols, definitions of
- english, 2
- french, 10
- german, 6
- spanish, 14

System setup, 55–58

T

Temperature, operating, 23
Troubleshooting, 73–77
TTL logic control, 69

U

Unpacking checklist, 19

W

Warm up
- controller, 67
- MFC, 58

Z

Zero adjustment
- controller, 67
- MFC, 58