WALTER
Fire system&Valve

苏州沃莱特流体控制有限公司

SUZHOU WALTER FLOW CONTROL CO.,LTD.

Automatic Hydraulic Control Valve

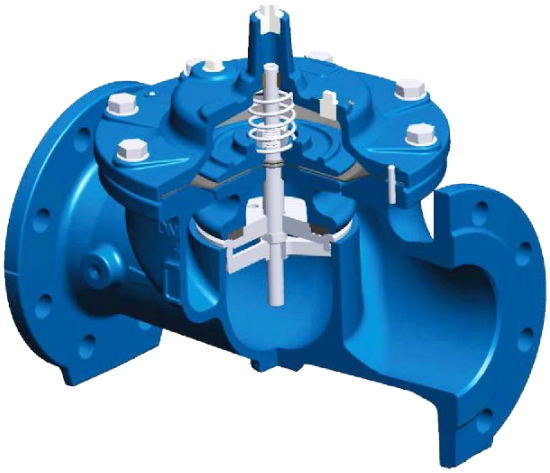

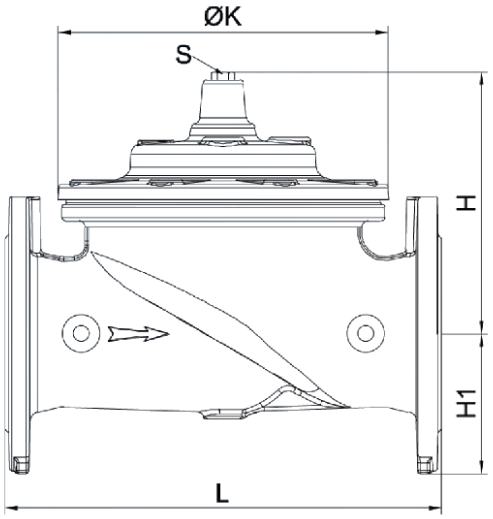

MATERIAL SPECIFICATION

Technical Specification	Part Name	Material	Part Name	Material
Design：BS EN1567 CJ/T219 JB/T 10674 EN1074-5 Flanges：EN 1092-2 PN16	Body	DI/SS	Diaphragm	Nylon + EPDM/VITON
	Spring	SS	O-Ring	EPDM/NBR/VITON
Face to Face: ISO 5752 Series GB 12221/EN558-1	Seat	SS/Brass	Guide Bush	Brass/Bronze
	Stem	SS/Bronze	Coating	Epoxy resin

DIMENTIONS (mm)

DN	50	65	80	100	125	150	200	250	300	350	400	450	500	600
L	230	290	310	350	350	480	6000	730	850	850	1100	1100	1250	1450
H	139	159	179	214	214	333	407	476	526	526	624	624	720	835
H1	85	95	102	112	127	145	172	205	232	262	292	325	360	425
ΦK	173	198	226	265	265	351	436	524	606	606	741	741	1002	1308
S	3/8″	3/8″	3/8″	1/2″	1/2″	1/2″	3/4″	1″	1″	1″	11/2″	11/2″	2″	2″
W.T (kg)	14	19	23	32	45	68	125	200	260	310	560	620	880	1300

Web:www.walter-fsv.com Email:walter@walter-fsv.com Tel:0086-512-68622355

Automatic Hydraulic Control Valve

1、100X Remote Float Control Valve

▸ Maintain a constant high water level, the float pilot will shut off and close the main valve.
▸ Remote float pilot closes when water level rises to high level, and opens when water level drops.



2、200X Pressure Reducing Valve

▸ Will Reduce the higher upstream pressure and keep the downstream pressure as the pilot setting (adjustable).
▸ Regardless of variations of flow or pressure.



3、300X Slow Control Check Valve

▸ Function as the check valve, and can be speed controlled by adding needle valve for opening or closing.



4、400X Flow Control Valve

▸ Maintains a constant flow, regardless of fluctuations of fluctuations of system pressure.
▸ The Rate of flow pilot can be adjustable.



5、500X Pressure Sustaining/Relief Valve

▸ Sustaining: prevents upstream pressure from dropping below the preset pressure. The main valve will be open against the 2 system pressure differential exceeds the pilot setting(adjustable).



6、600X Solenoid Operated Valve

▸ 2way solenoid-energized to open the valve.
▸ 2way solenoid-de–energized to close the valve.
▸ 3-way solenoid for special service conditions can be consulted.

