OLYMPUS®

Your Vision, Our Future

ULTRASONIC PULSER-RECEIVERS

5072PR, 5073PR, 5077PR



Manually Controlled Ultrasonic Pulser-Receivers

These affordable and reliable manually controlled pulser-receivers provide the perfect building blocks for both conventional and high-frequency applications. Each instrument is designed for superior low-noise receiver response and high-performance pulser control.

When used with an appropriate transducer and an analog or digital oscilloscope, Panametrics® pulser-receivers are the perfect starting point for ultrasonic flaw detection, thickness gaging, materials characterization, and transducer characterization.

Three Models To Fit ALL Your Testing Needs

Model 5072PR: 35 MHz (–3 dB) ultrasonic bandwidth and spike pulser ideal for general testing. The impulse pulser provides optimal broadband excitation resulting in superior time domain recovery especially at higher frequencies (between 15 MHz to 30 MHz).

Model 5073PR: 75 MHz (–3 dB) ultrasonic bandwidth with fast rise time spike pulser extending performance for work with 50 MHz transducers in applications that challenging the limits of axial and near surface resolution.

Model 5077PR: 35 MHz (–3 dB) ultrasonic bandwidth and square wave pulser-receiver ideal for maximizing the response in scattering materials. The square wave pulser is particularly advantageous when testing with transducers of 10 MHz or lower, as adjustable pulse width optimizes pulse energy, resulting in superior signal-to-noise characteristics.

Features

- Three models offering optimization for conventional and high-frequency applications
- Broadband spike (5072 and 5073) or tunable square wave (5077) transducer excitation models available
- Front panel controls allow quick and easy configuration of parameters for optimizing signal response
- Each model delivers a wide dynamic range with 1-dB sensitivity adjustments performed through a front panel lever switch
- Low-noise receiver amplification and pulser optimization ensure superior signal-to-noise characteristics
- Superior isolation of receiver from pulser main bang when operating in thru-transmission mode
- ±1 V RF output in 50 Ω load
- Small and lightweight

Ultrasonic Pulser-Receivers

Pulser-receivers used with ultrasonic transducers and an analog or digital oscilloscope are the primary building blocks of any ultrasonic test system.

The pulser produces an electrical pulse exciting a transducer, which converts the electrical input into mechanical energy, creating an ultrasonic wave. In pulse-echo applications, ultrasound travels through the test material until it is reflected by an interface back to the transducer. In thru-transmission applications, ultrasound travels through the material to a second transducer that acts as a receiver.

In either case, the transducer reconverts the mechanical pulse into an electrical signal. The signal is then amplified and conditioned by the receiver. After, the resulting RF is made available for further analysis. Because customers select the waveform display and/or digitization method, an infinite range of measurements and methods are possible.

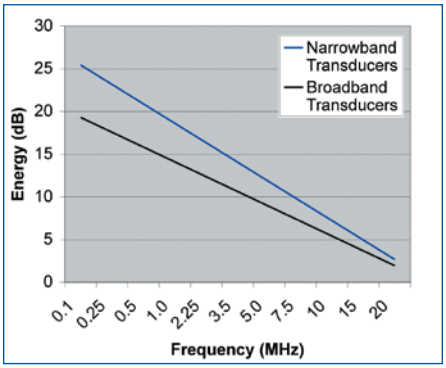

Potential increase in sensitivity using a tuned square wave pulser compared to a spike pulser, as a function of transducer center frequency.

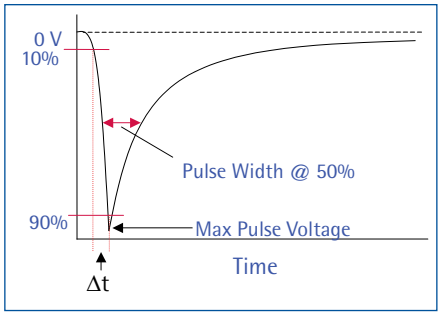

Spike excitation features sharp rise times adjusted by energy and damping values.

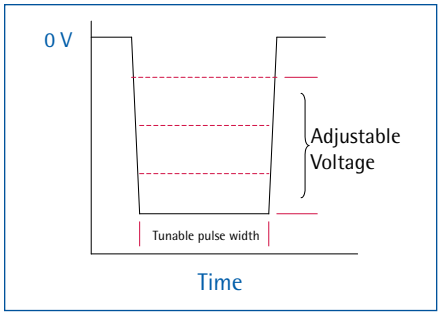

Square waves have controlled rise and fall times with directly adjustable voltages and pulse widths.

Square vs. Spike Excitation

Spike excitation pulsers optimize broadband response and near surface resolution.

For applications involving testing thin materials with high-frequency transducers where fast recovery times and broadband transducer response are important to ensuring adequate time and depth resolutions, Models 5072PR and 5073PR use a spike excitation technique producing an abrupt voltage transition followed by a recovery to the baseline. Ultrafast rise times directly translate into broad spectral excitation, resulting in wideband transducer response. It is possible to optimize transducer response by selecting pulse energy and damping values, which adjust pulse rise time, width, and voltage. In general, lower energy values and damping resistance produce the sharpest rise times resulting in the most efficient excitation of high-frequency transducers. The 5073PR pulser electronics can actually achieve rise times of less than 2 ns, making it possible to use up to 50 MHz broadband transducers.

Square wave pulsers dramatically increase sensitivity while maintaining broadband performance by tuning pulse width to the resonant frequency of the transducer.

Square wave excitation is especially useful in applications involving testing thick or highly attenuating materials with low-frequency transducers, typically improving penetration capability and signal-to-noise ratio. The Model 5077PR offers square wave excitation with a fast pulse rise and fall time. The pulse voltage and pulse width are directly adjusted allowing a precise control of pulse shapes. By tuning the period (pulse width) of the square wave to half that of the transducer's center frequency, the pulse energy to the transducer at its natural resonant frequency increases. This can result in an improved signal amplitude of 12 dB or more compared to spike pulsers using the same voltage setting. The effect is most evident with transducers of 5 MHz or less.

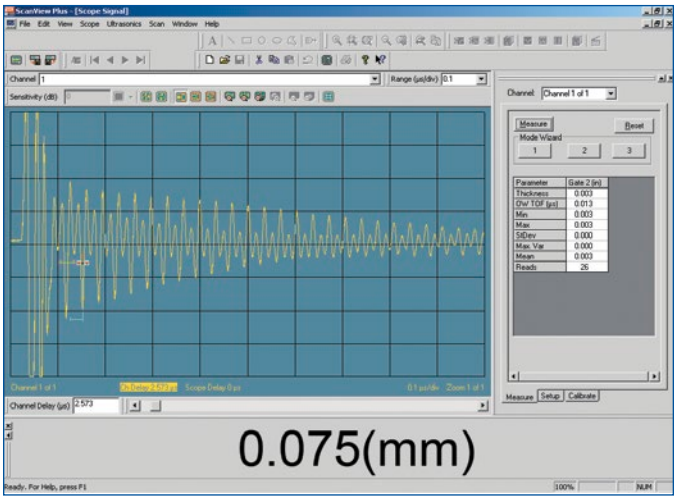

Response using Model 5073PR 75-MHz bandwidth pulser-receiver with a V215-BA-RM 50-MHz permanent delay contact transducer coupled to a 0.075 mm (0.003 in.) metal shim.

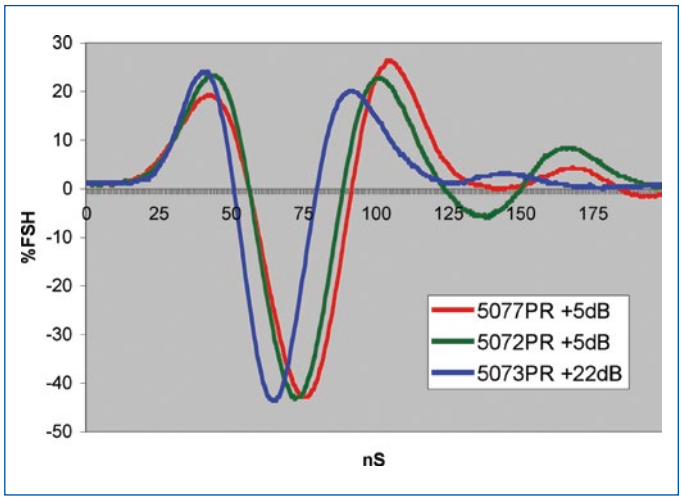

A-scan comparison between Models 5073PR and 5072PR with 50 Ω damping and energy Position 1 to Model 5077PR configured at 100 V and tuned for frequency optimization. Gain configured to noted decibel level to normalize signal height from a 20 MHz delay line transducer.

Transducers

Olympus NDT manufactures a wide range of transducers for conventional and high-frequency applications. Transducers with center frequencies between 50 kHz and 50 MHz are available for the manually controlled pulser-receiver line. Also offered are transducers with frequencies above 50 MHz that can be used with higher-frequency instruments available in the computer-controlled pulser-receiver family. Direct contact, delay line, dual, immersion, angle beam, normal incidence shear wave transducers, and others are also available.

Preamplifiers

A line of low-noise preamplifiers is available, offering a variety of bandwidths up to 40 MHz. These preamplifiers can be used with Olympus NDT pulser-receivers for better amplification in hard to penetrate materials or for better signal-to-noise characteristics when driving long cables from the transducer back to a host instrument.



Pictured are a variety of angle beam, immersion, dual-element, and contact transducers that can be used with pulser-receivers in ultrasonic materials evaluation.

Applications

Transducer Characterization

Panametrics® pulser-receivers are used as the base of industrial and medical transducer characterization systems. These pulser-receivers offer economical and reliable solutions for conventional, high-frequency, and phased array transducer characterization.

Biomedical Applications

Panametrics instrumentation is the choice of discerning researchers for a variety of biomedical applications including ocular imaging, vascular imaging, tissue characterization, blood flow analysis, and bone structure characterization.

Material Characterization

Measurements on Young's Modulus, Shear Modulus of Elasticity, and Poisson's ratio in non-dispersive isotropic engineering materials can be determined quickly and easily through computations based on sound velocities.

Correlation of velocity, time of flight, attenuation, and spectral content can often be related to other material properties. Grain structure, particle distribution, degree of nodularity in cast iron, polymerization in plastics, and mix ratios of liquids can all be inferred ultrasonically.



Model 5077PR square wave pulser-receiver used in conjunction with a digital oscilloscope for pulse-echo ultrasonic measurements of material characteristics.



Specifications*

Model	5072PR	5073PR	5077PR
Pulser			
Pulse type (main bang)	Negative	Negative impulse	Negative square wave
Rise time (10 % to 90 %)	Typically 5 ns, 10 ns max.	Typically < 2 ns	Typically < 10 ns, 20 ns max. (rise and fall times)
Available pulse voltage (no load)	–360 V	–180 V	–400 V, –300 V, –200 V, –100 V selectable
Available pulse energy	13 µJ, 26 µJ, 52 µJ, or 104 µJ	2 µJ, 4 µJ, 8 µJ, or 16 µJ	N/A
Damping	Select 15 Ω, 17 Ω, 20 Ω, 25 Ω, 36 Ω, 50 Ω, 100 Ω, or 500 Ω	12 Ω, 14 Ω, 17 Ω, 20 Ω, 25 Ω, 33 Ω, 50 Ω, or 100 Ω	N/A
Pulse width	N/A	N/A	10 fixed preset widths—15–20 MHz, 10 MHz, 7.5 MHz, 5.0–6.0 MHz, 3.5–4.0 MHz, 2–2.25 MHz, 1.0 MHz, 0.5 MHz, 0.25 MHz, 0.1 MHz. Variable ±25 % fine vernier tuning for each width.
Mode	Pulse echo or thru-transmission		
Isolation (53 dB min.)	Typically 62 dB at 10 MHz	Typically 62 dB at 50 MHz	Typically 62 dB at 10 MHz
Pulse repetition rate (internal)	0.1 kHz, 0.2 kHz, 0.5 kHz, 1 kHz, 2 kHz, or 5 kHz	0.2 kHz, 0.5 kHz, 1 kHz, 2 kHz, 5 kHz, or 10 kHz	0.1 kHz, 0.2 kHz, 0.5 kHz, 1 kHz, 2 kHz, 5 kHz, except that maximum PRF is limited to 2 kHz for 0.5 MHz tranducers, 1 kHz for 0.25 MHz transducers, and 0.5 kHz for 0.1 MHz transducers.
Pulse repetition rate (external)	0 kHz to 6 kHz	0 kHz to 10 kHz	0 kHz to 5 kHz (observe limitations of PRF versus pulse width)
Synch output pulse	3 V into 50 Ω		
External trigger input (in series with 10 kΩ)	2.4 V into 1000 PF 200-ns minimum pulse width	2.4 V into 1000 PF 200-ns minimum pulse width	2.4 V into 1000 PF 50-ns minimum pulse width
Receiver			
Bandwidth (–3 dB, RL = 50 Ω)	1 kHz to 35 MHz	1 kHz to 75 MHz	1 kHz to 35 MHz
Voltage gain	0 to 59, 1-dB steps (RL = 50 Ω)	0 to 39, 1-dB steps (RL = 50 Ω)	0 to 59, 1-dB steps (RL = 50 Ω)
Phase	Inverting or non-inverting (internal switch)		
Attenuator range	0 to 59, 1-dB steps (RL = 50 Ω)	0 to 49, 1-dB steps (RL = 50 Ω)	0 to 49, 1-dB steps (RL = 50 Ω)
High-pass filter	1 kHz (out) or 1 MHz	1 kHz (out) or 5 MHz	1 kHz (out) or 1 MHz
Low-pass filter	35 MHz (out) or 10 MHz	75 MHz (out) or 20 MHz	35 MHz (out) or 10 MHz
Noise (referred to input, max. BW)	70 µV peak-to-peak typical	200 µV peak-to-peak typical	70 µV peak-to-peak typical
Max. signal output	±1 V peak, terminated in 50 Ω		
Input resistance (thru-transmission)	500 Ω linear range 100 Ω at levels > linear range	100 Ω linear range 50 Ω at levels > linear range	500 Ω
Output impedance	50 Ω	50 Ω	50 Ω
Max. input power	400 mW	400 mW	500 mW
Unit			
Input/Output	External Trigger In, Sync Out, RF Out, T/R and R: All BNC female connectors		
Power requirements	100/120/220/240 V AC, 50/60 Hz		
Operating temperature range	0 °C to 50 °C (32 °F to 122 °F)		
Dimensions (W x H x D); weight	178 mm x 89 mm x 232 mm (7 in. x 3.5 in. x 9.1 in.); 2.3 kg (5 lb)		

ORDERING INFORMATION: Each model is shipped with a power cord and user's manual. Transducers and cables sold separately. The Olympus NDT sales department is available to discuss your applications in detail and to assist you in selecting transducers.

OLYMPUS SCIENTIFIC SOLUTIONS AMERICAS CORP. is certified to ISO 9001, ISO 14001, and OHSAS 18001.

*All specifications are subject to change without notice.

All brands are trademarks or registered trademarks of their respective owners and third party entities.
Copyright © 2014 by Olympus.

www.olympus-ims.com

OLYMPUS

OLYMPUS SCIENTIFIC SOLUTIONS AMERICAS CORP.
48 Woerd Avenue, Waltham, MA 02453, USA, Tel.: (1) 781-419-3900
12569 Gulf Freeway, Houston, TX 77034, USA, Tel.: (1) 281-922-9300
OLYMPUS NDT CANADA INC.
505, boul. du Parc-Technologique, Québec (Québec) G1P 4S9, Tel.: (1) 418-872-1155
1109 78 Ave, Edmonton (Alberta) T6P 1L8

For enquiries - contact
www.olympus-ims.com/contact-us

5072-73-77_EN_201405 • Printed in the USA • P/N: 920-108-EN Rev. D