AT-9400 Series Gigabit Ethernet Switches

Layer 2+	**AT-9408LC/SP**
	AT-9424T/GB
	AT-9424T/SP
Basic Layer 3	**AT-9424T**
	AT-9424T/POE
	AT-9424Ts
	AT-9424Ts/XP
	AT-9448T/SP
	AT-9448Ts/XP

Installation Guide

613-000987 Rev. B

Allied Telesis™

Copyright © 2008 Allied Telesis, Inc.

All rights reserved. No part of this publication may be reproduced without prior written permission from Allied Telesis, Inc.

Allied Telesis is a registered trademark of Allied Telesis, Incorporated. All other product names, company names, logos or other designations mentioned herein are trademarks or registered trademarks of their respective owners.

Allied Telesis, Inc. reserves the right to make changes in specifications and other information contained in this document without prior written notice. The information provided herein is subject to change without notice. In no event shall Allied Telesis, Inc. be liable for any incidental, special, indirect, or consequential damages whatsoever, including but not limited to lost profits, arising out of or related to this manual or the information contained herein, even if Allied Telesis, Inc. has been advised of, known, or should have known, the possibility of such damages.

Electrical Safety and Emissions Standards

This product meets the following standards.

U.S. Federal Communications Commission
Radiated Energy
Note: This equipment has been tested and found to comply with the limits for a Class A digital device pursuant to Part 15 of FCC Rules. These limits are designed to provide reasonable protection against harmful interference when the equipment is operated in a commercial environment. This equipment generates, uses, and can radiate radio frequency energy and, if not installed and used in accordance with this instruction manual, may cause harmful interference to radio communications. Operation of this equipment in a residential area is likely to cause harmful interference in which case the user will be required to correct the interference at his own expense.
Note: Modifications or changes not expressly approved of by the manufacturer or the FCC, can void your right to operate this equipment.

Industry Canada
This Class A digital apparatus complies with Canadian ICES-003.
Cet appareil numérique de la classe A est conforme à la norme NMB-003 du Canada.

RFI Emissions FCC Class A, EN55022 Class A, EN61000-3-2, EN61000-3-3, VCCI Class A, C-TICK, CE

Warning: In a domestic environment this product may cause radio interference in which case the user may be required to take adequate measures.

EMC (Immunity) EN55024

Electrical Safety EN60950 (TUV), UL 60950 ($_{C}UL_{US}$)

Laser Safety EN60825

Translated Safety Statements

Important: The ☞ indicates that a translation of the safety statement is available in a PDF document titled “Translated Safety Statements” (613-000990) posted on the Allied Telesis website at www.alliedtelesis.com. This document is also included with the documentation CD that is shipped with the product.

Contents

Preface 7
Product Documentation 8
Where to Go First 9
Starting a Management Session 10
Safety Symbols Used in this Document 11
Where to Find Web-based Guides 12
Contacting Allied Telesis 13
Online Support 13
Email and Telephone Support 13
Returning Products 13
For Sales or Corporate Information 13
Warranty 13
Management Software Updates 13

Chapter 1: Overview 15
Descriptions 17
AT-9408LC/SP Switch 17
AT-9424T/GB Switch 18
AT-9424T/SP Switch 19
AT-9424T Switch 20
AT-9424T/POE Switch 21
AT-9424Ts Switch 22
AT-9424Ts/XP Switch 23
AT-9448T/SP Switch 24
AT-9448Ts/XP Switch 25
10/100/1000Base-T Twisted Pair Ports 26
Connector Type 26
Speed 26
Duplex Mode 26
Maximum Distance 27
Cable Type 27
Auto-MDI/MDI-X 27
Port Pinouts 27
Fiber Optic Ports 28
Connector Type 28
Speed 28
Maximum Distance and Cabling 28
GBIC Transceiver Slots 29
SFP Transceiver Slots 30
XFP Transceiver Slots 31
Redundant Twisted Pair Ports 32
Compact Flash Card Slot 34
Port LEDs 35
10/100/1000Base-T Twisted Pair Port LEDs 35
Fiber Optic Port and Transceiver Slot LEDs 36
System LEDs 37
Stack LEDs 38
Expansion Slot 39
Terminal Port 40
Power Over Ethernet 41

Power Budgeting 41
Implementation 42
AT-RPS3204 Redundant Power Supply 43
AC Power Connector 44

Chapter 2: Installing the Switch 45
Reviewing Safety Precautions 46
Selecting a Site 49
Twisted Pair and Fiber Optic Cable Specifications 50
Twisted Pair Cable Specifications 50
Fiber Optic Cable Specifications 51
Optional Transceiver Cable Specifications 51
Unpacking the Switch 52
Installing the Power Cord Retaining Clip (AC Switches Only) 53
Installing the Switch in a Rack 54
Installing Optional Transceivers 56
Installing a GBIC Transceiver 56
Installing an SFP Transceiver 57
Installing an XFP Transceiver 59
Cabling the Twisted Pair or Fiber Optic Ports 61
Applying AC Power 62
Starting a Local Management Session 64
Warranty Registration 66

Chapter 3: Troubleshooting 67
Power LED is Off 68
Twisted Pair Port Link LED is Off 69
Fiber Optic Port Link LED is Off 70
Transceiver is Installed but the Status is “Not Present” 71
System Fault LED is Blinking 72
System Fault LED is Steadily On 73
Cannot Establish a Local (Out-of-Band) Management Session 74
Switch Functions Intermittently 75

Appendix A: Technical Specifications 77
Physical Specifications 77
Environmental Specifications 78
Power Specifications 79
Certifications 79
RJ-45 Twisted Pair Port Pinouts 80
AT-9408LC/SP Switch 1000Base-SX Port Specifications 82
RJ-45 Style Serial Terminal Port Pinouts 83
RPS 21-pin D-combo Port and Connector Pinouts 83

Preface

This guide contains the installation instructions for the AT-9400 Layer 2+ and Basic Layer 3 Gigabit Ethernet Switches. This preface contains the following sections:

- “Product Documentation” on page 8
- “Where to Go First” on page 9
- “Starting a Management Session” on page 10
- “Safety Symbols Used in this Document” on page 11
- “Where to Find Web-based Guides” on page 12
- “Contacting Allied Telesis” on page 13

Product Documentation

For overview information on the features of the AT-9400 Switch and the AT-S63 Management Software, refer to:

- AT-S63 Management Software Features Guide
  (PN 613-000801)

For instructions on starting a local or remote management session, refer to:

- Starting an AT-S63 Management Session Guide
  (PN 613-000817)

For instructions on installing or managing stand-alone switches, refer to:

- AT-S63 Management Software Menus Interface User's Guide
  (PN 613-50570-00)
- AT-S63 Management Software Command Line Interface User's Guide
  (PN 613-50571-00)
- AT-S63 Management Software Web Browser Interface User's Guide
  (PN 613-50592-00)

For instructions on installing or managing a stack of AT-9400 Basic Layer 3 Switches and the AT-StackXG Stacking Module, refer to:

- AT-9400 Stack Installation Guide
  (PN 613-000796)
- AT-S63 Stack Command Line Interface User's Guide
  (PN 613-000777)

Where to Go First

Allied Telesis recommends that you read Chapter 1, Overview, in the *AT-S63 Management Software Features Guide* before you begin to manage the switch for the first time. There you will find a variety of basic information about the unit and the management software, like the two levels of manager access levels and the different types of management sessions.

The *AT-S63 Management Software Features Guide* is also your resource for background information on the features of the switch. You can refer there for the relevant concepts and guidelines when you configure a feature for the first time.

Starting a Management Session

For instructions on how to start a local or remote management session on the AT-9400 Switch, refer to the *Starting an AT-S63 Management Session Guide*.

Safety Symbols Used in this Document

This document uses the safety symbols defined in Table 1.

Table 1. Safety Symbols

Symbol	Meaning	Description
⚠	Caution	Performing or omitting a specific action may result in equipment damage or loss of data.
⚠	Warning	Performing or omitting a specific action may result in electrical shock.

Where to Find Web-based Guides

The installation and user guides for all Allied Telesis products are available in portable document format (PDF) on our web site at **www.alliedtelesis.com**. You can view the documents online or download them onto a local workstation or server.

Contacting Allied Telesis

This section provides Allied Telesis contact information for technical support as well as sales or corporate information.

Online Support

You can request technical support online by accessing the Allied Telesis Knowledge Base from the following web site: **www.alliedtelesis.com/support**. You can use the Knowledge Base to submit questions to our technical support staff and review answers to previously asked questions.

Email and Telephone Support

For Technical Support via email or telephone, refer to the Allied Telesis web site: **www.alliedtelesis.com**. Select your country from the list displayed on the website. Then select the appropriate menu tab.

Returning Products

Products for return or repair must first be assigned a Return Materials Authorization (RMA) number. A product sent to Allied Telesis without a RMA number will be returned to the sender at the sender's expense.

To obtain an RMA number, contact the Allied Telesis Technical Support group at our web site: **www.alliedtelesis.com/support/rma**. Select your country from the list displayed on the website. Then select the appropriate menu tab.

For Sales or Corporate Information

You can contact Allied Telesis for sales or corporate information at our web site: **www.alliedtelesis.com**. Select your country from the list displayed on the website. Then select the appropriate menu tab.

Warranty

The AT-9400 Switch has a Lifetime Warranty (two years fan and PSU). Go to **www.alliedtelesis.com/warranty** for the specific terms and conditions of the warranty and for warranty registration.

Management Software Updates

New releases of management software for our managed products are available from either of the following Internet sites:

- Allied Telesis web site: **www.alliedtelesis.com**
- Allied Telesis FTP server: **ftp://ftp.alliedtelesis.com**

If you prefer to download new software from the Allied Telesis FTP server from your workstation's command prompt, you will need FTP client software and you must log in to the server. Enter "anonymous" for the user name and your email address for the password.

Chapter 1
Overview

The AT-9400 Switches are managed Gigabit Ethernet switches for Ethernet, Fast Ethernet, and Gigabit Ethernet networks. The AT-9400 Switches are divided into two groups:

- Layer 2+ Switches
  - AT-9408LC/SP
  - AT-9424T/GB
  - AT-9424T/SP
- Basic Layer 3 Switches
  - AT-9424T
  - AT-9424T/POE
  - AT-9424Ts
  - AT-9424Ts/XP
  - AT-9448T/SP
  - AT-9448Ts/XP

The differences between the two groups are explained in the *AT-S63 Management Software Features Guide*.

This chapter has the following sections:

- “Descriptions” on page 17
- “10/100/1000Base-T Twisted Pair Ports” on page 26
- “Fiber Optic Ports” on page 28
- “GBIC Transceiver Slots” on page 29
- “SFP Transceiver Slots” on page 30
- “XFP Transceiver Slots” on page 31
- “Redundant Twisted Pair Ports” on page 32
- “Compact Flash Card Slot” on page 34
- “Port LEDs” on page 35
- “System LEDs” on page 37
- “Stack LEDs” on page 38
- “Expansion Slot” on page 39
- “Terminal Port” on page 40

- “Power Over Ethernet” on page 41
- “AT-RPS3204 Redundant Power Supply” on page 43
- “AC Power Connector” on page 44

Descriptions

The following sections describe the AT-9400 Switches.

AT-9408LC/SP Switch

The AT-9408LC/SP Layer 2+ Switch has the following hardware features:

- Eight 1000Base-SX fiber optic ports with LC-duplex connectors
- Four small form-factor pluggable (SFP) transceiver slots
- An RJ-45 style serial terminal port for local (out-of-band) management
- Status LEDs for the ports, SFP transceiver slots, and system
- Redundant power supply (RPS) connector
- Compact flash card slot

The front and back panels of the AT-9408LC/SP Switch are shown in Figure 1.

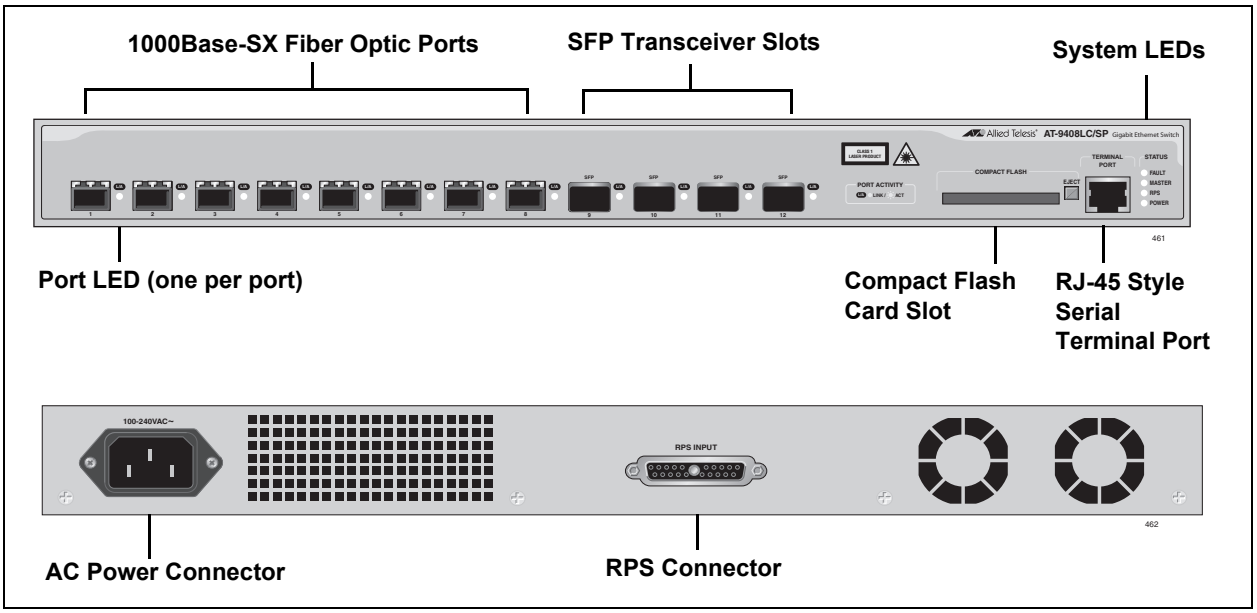

Figure 1 AT-9408LC/SP Switch - Front and Back Panels

AT-9424T/GB Switch

The AT-9424T/GB Layer 2+ Switch has the following hardware features:

- 24 10/100/1000Base-T ports
- Two gigabit interface connector (GBIC) transceiver slots
- An RJ-45 style serial terminal port for local (out-of-band) management
- Status LEDs for the ports, transceiver slots, and system
- Redundant power supply connector

Figure 2 shows the front and back panels of the AT-9424T/GB Switch.

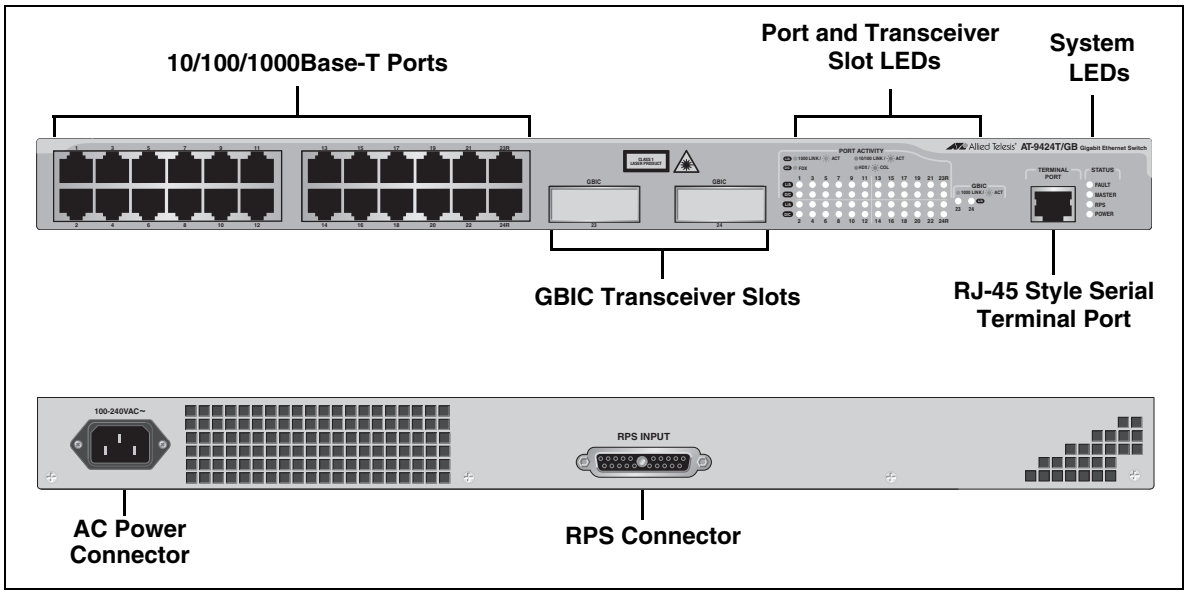

Figure 2 AT-9424T/GB Switch - Front and Back Panels

AT-9424T/SP Switch

The hardware features of the AT-9424T/SP Layer 2+ Switch include:

- 24 10/100/1000Base-T ports
- Two Gigabit Ethernet small form-factor pluggable (SFP) transceiver slots
- An RJ-45 style serial terminal port for local (out-of-band) management
- Status LEDs for the ports, transceiver slots, and system
- Redundant power supply connector

Figure 3 shows the front and back panels of the AT-9424T/SP Switch.

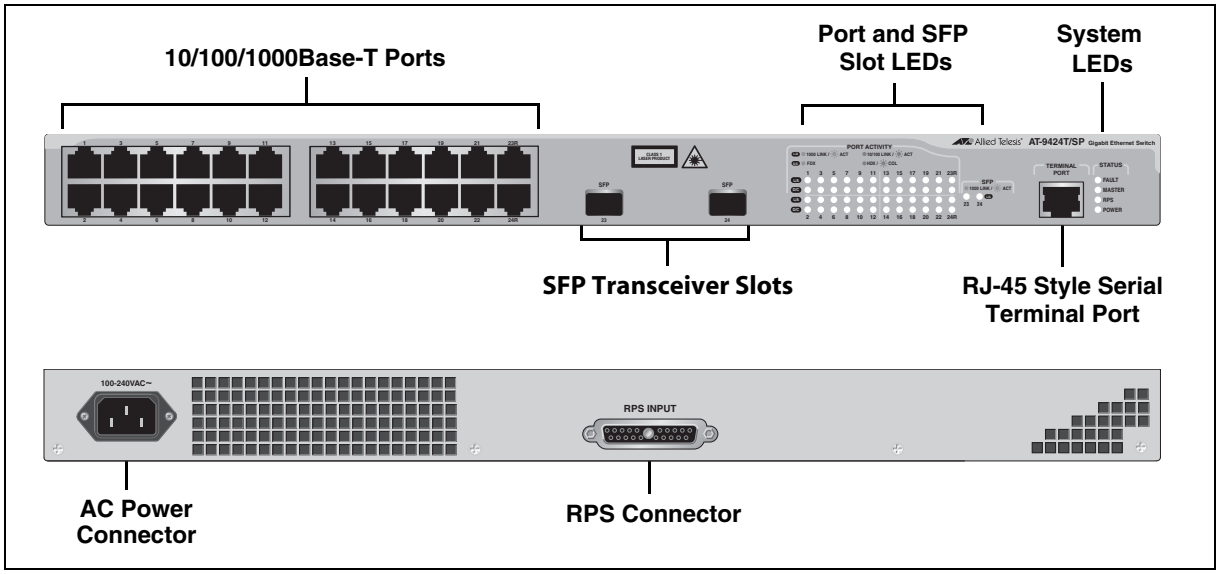

Figure 3 AT-9424T/SP Switch - Front and Back Panels

AT-9424T Switch

The AT-9424T Basic Layer 3 Switch has these hardware features:

- 24 10/100/1000Base-T ports
- Four Gigabit Ethernet small form-factor pluggable (SFP) transceiver slots
- An RJ-45 style serial terminal port for local (out-of-band) management
- Status LEDs for the ports, transceiver slots, and system

Figure 6 shows the front and back panels of the AT-9424T Switch.

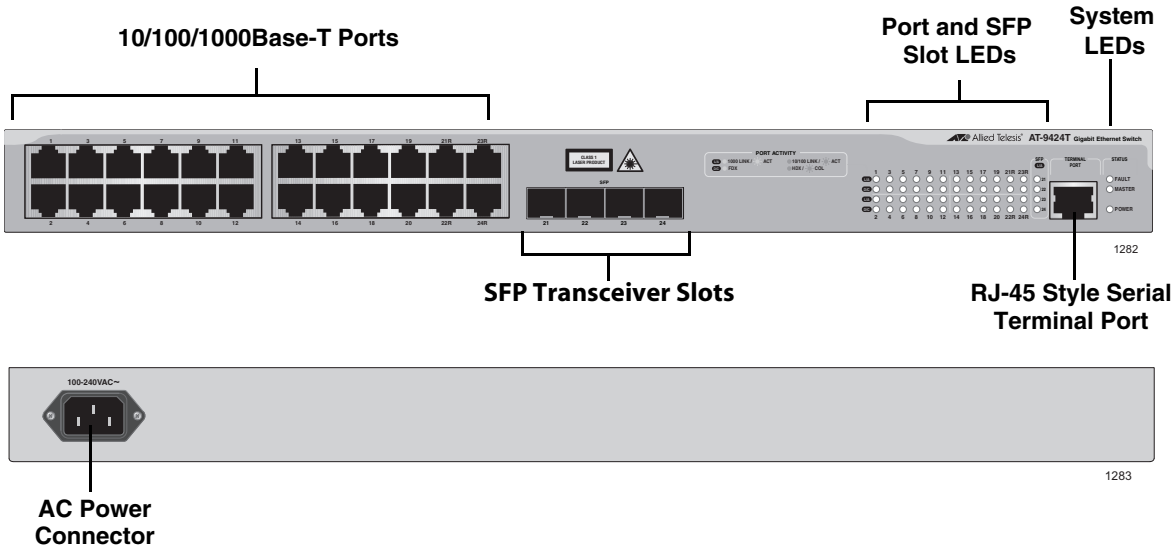

Figure 4 AT-9424T Switch - Front and Back Panels

AT-9424T/POE Switch

The AT-9424T/POE Basic Layer 3 Switch has these hardware features:

- 24 10/100/1000Base-T ports with Power over Ethernet (PoE) capability. (For a description of this feature, refer to “Power Over Ethernet,” on page
- Four Gigabit Ethernet small form-factor pluggable (SFP) transceiver slots
- An RJ-45 style serial terminal port for local (out-of-band) management
- Status LEDs for the ports, transceiver slots, and system

Figure 5 shows the front and back panels of the AT-9424T/POE Switch

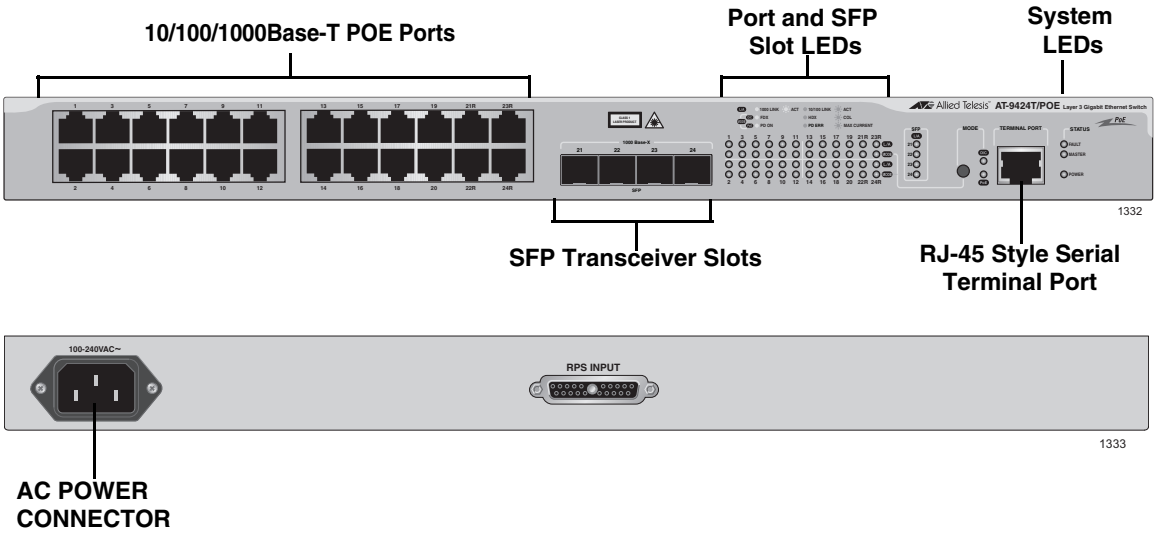

Figure 5 AT-9424T/POE Switch - Front and Back Panels

AT-9424Ts Switch

The AT-9424Ts Basic Layer 3 Switch has these hardware features:

- 24 10/100/1000Base-T ports
- Four Gigabit Ethernet small form-factor pluggable (SFP) transceiver slots
- An RJ-45 style serial terminal port for local (out-of-band) management
- Status LEDs for the ports, transceiver slots, and system
- Redundant power supply connector
- Compact flash card slot
- Expansion slot for the AT-StackXG Stacking Module

Figure 6 shows the front and back panels of the AT-9424Ts Switch.

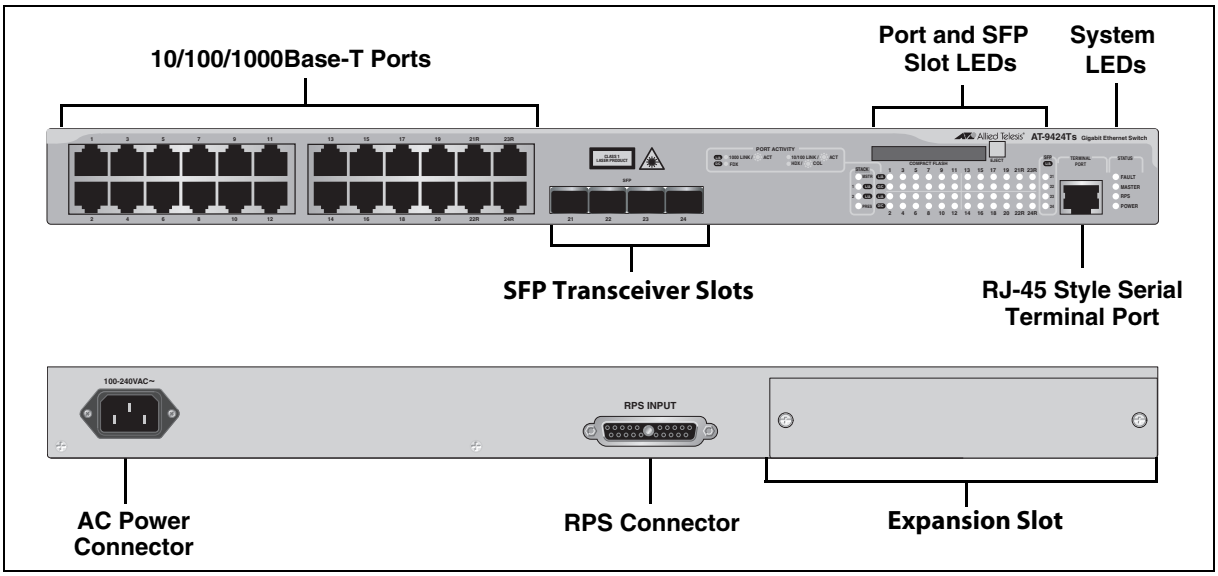

Figure 6 AT-9424Ts Switch - Front and Back Panels

AT-9424Ts/XP Switch

The AT-9424Ts/XP Basic Layer 3 Switch has these hardware features:

- 24 10/100/1000Base-T ports
- Four Gigabit Ethernet small form-factor pluggable (SFP) transceiver slots
- Two 10 Gigabit Ethernet small form factor pluggable (XFP) transceiver slots
- An RJ-45 style serial terminal port for local (out-of-band) management
- Status LEDs for the ports, transceiver slots, and system
- Redundant power supply connector
- Compact flash card slot
- Expansion slot for the AT-StackXG Stacking Module

Figure 7 shows the front and back panels of the AT-9424Ts/XP Switch.

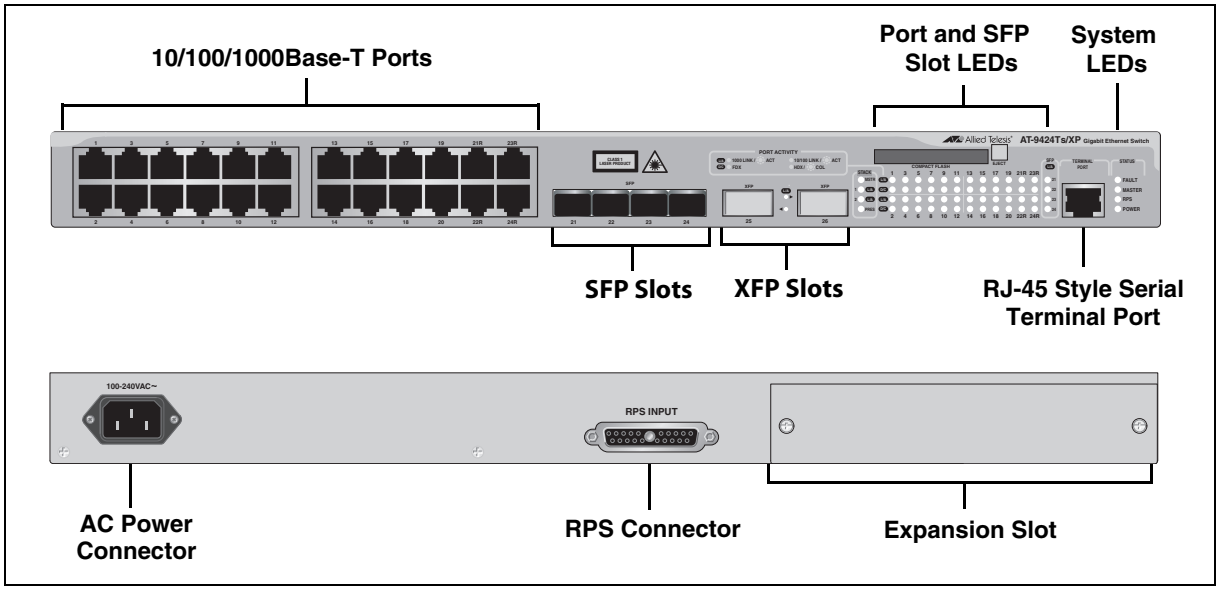

Figure 7 AT-9424Ts/XP Switch - Front and Back Panels

AT-9448T/SP Switch

The hardware features of the AT-9448T/SP Basic Layer 3 Switch include:

- 48 10/100/1000Base-T ports
- Four Gigabit Ethernet SFP transceiver slots
- An RJ-45 style serial terminal port for local (out-of-band) management.
- Status LEDs for the ports, transceiver slots, and system
- Redundant power supply (RPS) connector
- Compact flash card slot

Figure 8 shows the front and back panels of the AT-9448T/SP Switch.

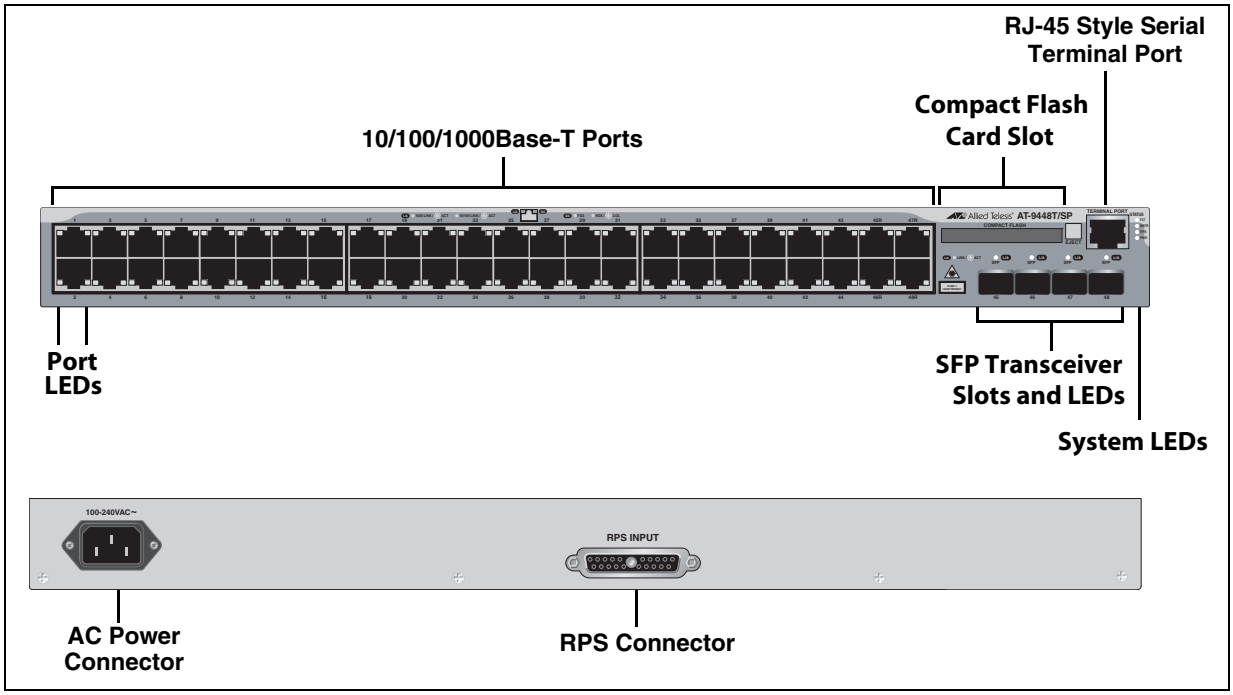

Figure 8 AT-9448T/SP Switch - Front and Back Panels

AT-9448Ts/XP Switch

The AT-9448Ts/XP Basic Layer 3 Switch has the following hardware features:

- 48 10/100/1000Base-T ports
- Two 10 Gigabit Ethernet small form factor pluggable (XFP) transceiver slots
- An RJ-45 style serial terminal port for local (out-of-band) management
- Status LEDs for the ports, transceiver slots, and system
- Redundant power supply connector
- Compact flash card slot
- Expansion slot for the AT-StackXG Stacking Module

Figure 9 shows the front and back panels of the AT-9448Ts/XP Switch.

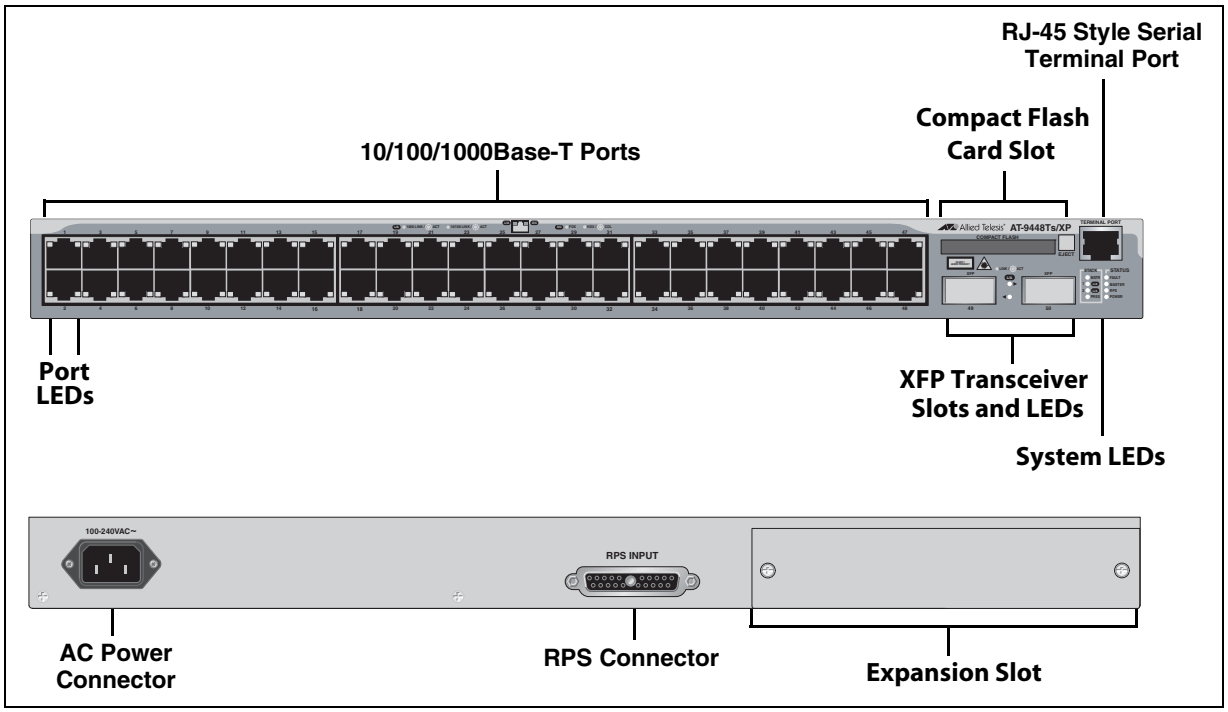

Figure 9 AT-9448Ts/XP Switch - Front and Back Panels

10/100/1000Base-T Twisted Pair Ports

This section describes the twisted pair ports on the switches. (This section does not apply to the AT-9408LC/SP Switch.)

Connector Type

The ports are 8-pin RJ-45 connectors that use four pins at 10 or 100 Mbps and all eight pins at 1000 Mbps. For the pin assignments, refer to “RJ-45 Twisted Pair Port Pinouts” on page 80.

Speed

A port’s speed can be 10, 100, or 1000 Mbps. The speed can be set automatically through Auto-Negotiation, the default setting, or manually with the AT-S63 Management Software.

Note
To operate at 1000 Mbps, a twisted pair port must be set to Auto - Negotiation. The speed of a twisted pair port cannot be manually set to 1000 Mbps.

Duplex Mode

A twisted pair port can operate in either half- or full-duplex mode. (Full-duplex mode is the only mode available when a port is operating at 1000 Mbps.) The twisted pair ports are IEEE 802.3u-compliant and Auto-Negotiate the duplex mode setting.

You can disable Auto-Negotiation on one or all of the switch ports so that you can set the duplex mode manually through the AT-S63 Management Software.

Note
In order for a switch port to successfully Auto-Negotiate its duplex mode with a 10 or 100 Mbps end node, the end node should also be configured for Auto-Negotiation. Otherwise, a duplex mode mismatch can occur. A switch port using Auto-Negotiation defaults to half-duplex if it detects that the end node is not using Auto-Negotiation. This results in a mismatch if the end node is operating at a fixed duplex mode of full-duplex.

To avoid this problem when connecting an end node with a fixed duplex mode of full-duplex to a switch port, use the AT-S63 Management Software to disable Auto-Negotiation on the port and set the port speed and duplex mode manually.

Maximum Distance

The ports have a maximum operating distance of 100 meters (328 feet).

Cable Type

The cabling requirements for a 10/100/1000Base-T port are:

- For 10 Mbps operation: Standard TIA/EIA 568-B-compliant Category 3 or better shielded or unshielded cabling with 100 ohm impedance and a frequency of 16 MHz.
- For 100 Mbps operation: Standard TIA/EIA 568-A-compliant Category 5 or TIA/EIA 568-B-compliant Enhanced Category 5 (Cat 5e) shielded or unshielded cabling with 100 ohm impedance and a frequency of 100 MHz.
- For 1000 Mbps operation: Standard TIA/EIA 568-A-compliant Category 5 or TIA/EIA 568-B-compliant Enhanced Category 5 (Cat 5e) shielded or unshielded cabling with 100 ohm impedance and a frequency of 100 MHz.

Auto-MDI/ MDI-X

The twisted pair ports on the switch are IEEE 802ab-compliant and feature auto-MDI/MDI-X. This feature, available when a port's speed and duplex mode are set through Auto-Negotiation, automatically configures a switch port to MDI or MDI-X depending on the wiring configuration of the port on the end node. This allows you to connect any network device to a port on the switch using a straight-through twisted pair cable.

If Auto-Negotiation is disabled on a port and the speed and duplex mode are set manually, the auto-MDI/MDI-X feature is also disabled and the port's wiring configuration defaults to the MDI-X setting. This setting can be configured with the AT-S63 Management Software.

Port Pinouts

Refer to Table 13 on page 80 for the port pinouts when a twisted pair port operates at 10 or 100 Mbps in the MDI configuration and Table 14 on page 80 for the MDI-X configuration. For port pinouts when a twisted pair port operates at 1000 Mbps, refer to Table 15 on page 81.

Fiber Optic Ports

This section applies to ports 1 through 8 on the AT-9408LC/SP Switch.

Connector Type

The ports feature LC-duplex connectors.

Speed

The ports have fixed speed of 1000 Mbps (1000Base-SX).

Maximum Distance and Cabling

The ports have a maximum distance of 275 meters (m) with 62.5/125 µm (core/cladding) multimode fiber optic cable and 550m with 50/125 µm multimode fiber optic cable.

Note
For optical specifications, refer to “AT-9408LC/SP Switch 1000Base-SX Port Specifications” on page 82.

GBIC Transceiver Slots

For interconnecting devices over large distances using fiber optic cable, the AT-9424T/GB Switch has two slots on the front panel labeled 23 and 24 for optional fiber optic Gigabit Interface Converter (GBIC) Ethernet transceivers. Figure 10 illustrates a GBIC transceiver.

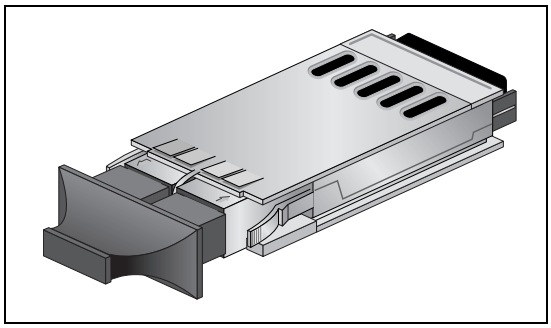

Figure 10 GBIC Transceiver

GBIC transceiver slots 23 and 24 are paired with twisted pair ports 23R and 24R. Only one port or transceiver in a pair can be operational at a time and a link on a transceiver port takes priority over a link on a twisted pair port. For further information, refer to “Redundant Twisted Pair Ports” on page 32.

Note
For a list of supported GBIC transceivers, contact your Allied Telesis sales representative.

SFP Transceiver Slots

Several of the AT-9400 Switches feature slots for optional Gigabit Ethernet SFP transceivers for interconnecting network devices over large distances using fiber optic cable. With the exception of the AT-9408LC/SP Switch, each SFP slot is paired with a twisted pair port. A link on an SFP transceiver takes priority in the event both an SFP transceiver and its paired twisted pair port have established links to their respective end nodes. For further information, refer to “Redundant Twisted Pair Ports” on page 32.

Figure 11 illustrates an SFP transceiver.

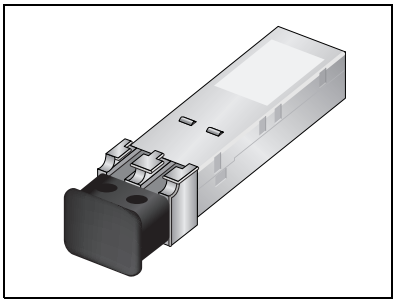

Figure 11 SFP Transceiver

Note
For a list of supported SFP transceivers for the AT-9400 Switches, contact your Allied Telesis sales representative.

XFP Transceiver Slots

Several AT-9400 Switches have slots for optional XFP 10 Gigabit Ethernet transceivers to connect high speed, 10 gigabit devices to the switch or create high speed backbone networks between switches.

Figure 12 shows an example of an XFP transceiver.

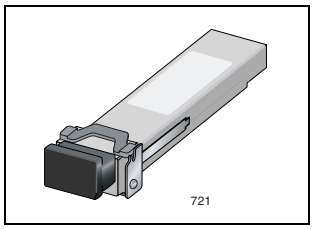

Figure 12 XFP Transceiver

Note
For a list of supported XFP transceivers, contact your Allied Telesis sales representative.

Redundant Twisted Pair Ports

Some AT-9400 Switches have two or four twisted pair ports that are paired with GBIC or SFP slots. The twisted pair ports are identified with the letter “R” for “Redundant” as part of their number on the front faceplate of the unit. The ports and slots are listed in Table 2.

Table 2 Twisted Pair Ports Matched with GBIC and SFP Slots

Model	Ports and Slots
AT-9424T/GB	23R with GBIC slot 23 24R with GBIC slot 24
AT-9424T/SP	23R with SFP slot 23 24R with SFP slot 24
AT-9424T, AT-9424Ts, and AT-9424Ts/XP	21R with SFP slot 21 22R with SFP slot 22 23R with SFP slot 23 24R with SFP slot 24
AT-9448T/SP	45R with SFP slot 45 46R with SFP slot 46 47R with SFP slot 47 48R with SFP slot 48

Follow these guidelines when using these ports and slots:

- Only one port in a pair — either the twisted pair port or a corresponding GBIC or SFP module — can be active at a time.
- The twisted pair port is the active port when its GBIC or SFP slot is empty, or when a GBIC or SFP module is installed but has not established a link to an end node.
- The twisted pair port automatically changes to the redundant status mode when a GBIC or SFP module establishes a link with an end node.
- A twisted pair port automatically transitions back to the active status when the link is lost on the GBIC or SFP module.
- In nearly all cases, a twisted pair port and a GBIC or SFP module share the same configuration settings, including port settings, VLAN assignments, access control lists, and spanning tree.
- An exception to the shared settings is port speed. If you disable Auto-Negotiation on a twisted pair port and set the speed and duplex mode manually, the speed reverts to Auto-Negotiation when a GBIC or SFP module establishes a link with an end node.

Note
These guidelines do not apply to the SFP slots on the AT-9408LC/SP Switch and the XFP slots on the AT-9424Ts/XP and AT-9448Ts/XP Switches.

Compact Flash Card Slot

The compact flash card slot featured on many of the AT-9400 Switches and shown in Figure 13 is used to store configuration files and AT-S63 Management Software image files on a compact flash card. A compact flash memory card can make it easier for you to upgrade the files on a switch or transfer files between AT-9400 Switches.

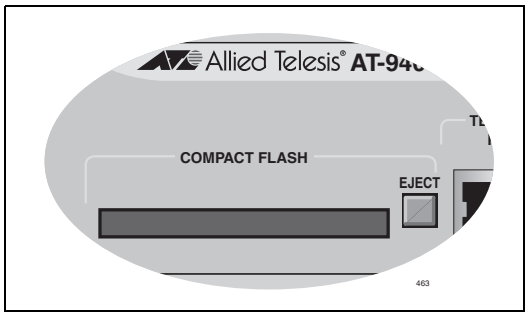

Figure 13 Compact Flash Card Slot

Note
A flash memory card is not required for normal operations of the switch.

The AT-9400 Switches support only the AT-CF128A 128MB compact flash card from Allied Telesis. Contact your Allied Telesis sales representative for more information.

To insert a compact flash card, position it so that the manufacturer's brand label is facing up and press it into the slot until the button marked "Eject" pops out.

To remove the compact flash card, press the button marked "Eject" until it is pressed in completely and then remove the compact flash card.

For information on how to transfer files to and from a flash memory card, refer to the *AT-S63 Management Software User's Guides.*

Port LEDs

The following sections describe the twisted pair and fiber optic port LEDs.

10/100/1000Base-T Twisted Pair Port LEDs

A twisted pair port has two LEDs labeled L/A (link/activity) and D/C (duplex mode/collisions). The L/A LED indicates the speed and activity on a port. The D/C LED indicates the duplex mode (full- or half-duplex) and the status of collisions on the port.

Table 3 describes the LEDs for the 10/100/1000Base-T twisted pair ports.

Table 3 Twisted Pair Port LEDs

LED	Function	State	Description
L/A	Link Status and Activity	Off	No link is established between the port and the end node.
		Solid green	The port has established a link at 1000 Mbps.
		Flashing green	Packets are being received or transmitted at 1000 Mbps.
		Solid amber	The port has established a link at 10 or 100 Mbps.
		Flashing amber	Packets are being received or transmitted at 10 or 100 Mbps.
D/C	Duplex Mode and Collisions	Green	The port is operating in full-duplex mode.
		Amber	The port is operating in half-duplex mode. (Only when operating at 10 or 100 Mbps.)
		Flashing amber	Collisions are occurring on the port. (Only when operating at 10 or 100 Mbps, half duplex mode.)

Fiber Optic Port and Transceiver Slot LEDs

The 1000Base-SX fiber optic ports on the AT-9408LC/SP Switch and the GBIC and SFP transceiver slots have one LED. The LED is defined in Table 4.

Table 4 1000Base-SX Port and GBIC and SFP Slot LED

LED	Function	State	Description
L/A	Link Status and Activity	Off	No link is established between the port and the end node.
		Solid green	The port has established a link at 1000 Mbps.
		Flashing green	Packets are being received or transmitted at 1000 Mbps.

Each 10 Gigabit Ethernet transceiver slot on the AT-9424Ts/XP and AT-9448Ts/XP Switches has one LED, defined in Table 5.

Table 5 XFP Slot LED

LED	Function	State	Description
L/A	Link Status and Activity	Off	No link is established between the port and the end node.
		Solid green	The port has established a link at 10 Gbps.
		Flashing green	Packets are being received or transmitted at 10 Gbps.

System LEDs

The system LEDs on the front panel display general status information, as described in Table 6.

Table 6 System LEDs

LED	State	Description
FAULT or FLT	Off	Normal operation.
	Solid Red	The switch or management software has malfunctioned. (Refer to Chapter 3, “Troubleshooting” on page 67 for instructions on how to troubleshoot a problem.)
	Flashing Red	The switch is saving its configuration or is downloading a new version of the AT-S63 Management Software.
MASTER or MSTR	Off	The switch has an enhanced stacking status of slave or unavailable.
	Green	The switch has an enhanced stacking status of master.
RPS	Off	No optional redundant power supply is connected to the switch.
	Green	An optional redundant power supply is physically connected to the switch and may be powered on or off.
POWER or PWR	Off	The switch is not receiving power.
	Green	The switch is receiving power.

Stack LEDs

The Stack LEDs reflect the status of the two Stack ports on the optional AT-StackXG Stacking Module for the AT-9424Ts, AT-9424Ts/XP, and AT-9448Ts/XP Switches. The module, which does not have LEDs, is used to build a stack of up to five or eight devices. These LEDs remain off if the optional module is not installed. For further information, refer to “Expansion Slot” on page 39.

Table 7 Stack LEDs

LED	State	Description
MSTR	Off	The switch is not the master unit of the stack.
	Green	The switch is acting as the master unit of the stack.
1 L/A	Off	Stack Port 1 has not established a link to a stacking port on another AT-StackXG Stacking Module.
	Green	Stack Port 1 has established a link to a stacking port on another AT-StackXG Stacking Module.
	Flashing Green	Stack Port 1 has established a link to a stacking port on another AT-StackXG Stacking Module and is sending or receiving packet traffic.
2 L/A	Off	Stack Port 2 has not established a link to a stacking port on another AT-StackXG Stacking Module.
	Green	Stack Port 2 has established a link to a stacking port on another AT-StackXG Stacking Module.
	Flashing Green	Stack Port 2 has established a link to a stacking port on another AT-StackXG Stacking Module and is sending or receiving packet traffic.
PRES	Off	The expansion slot for the AT-StackXG Stacking Module is empty.
	Green	The AT-StackXG Stacking Module is installed in the expansion slot.

Expansion Slot

The expansion slot on the AT-9424Ts, AT-9424Ts/XP, and AT-9448Ts/XP Switches accommodates the optional AT-StackXG Stacking Module. The module creates a stack of up to five or eight switches, depending on the model. The switches of a stack function as a single, logical unit where network functions, such as the spanning tree protocol and static port trunks, can span across all the ports of the switches in the stack. This increases network bandwidth and simplifies network management.

For further information and installation instructions, refer to the *AT-9400 Stack Installation Guide*.

Note
Do not install the AT-StackXG Stacking Module into a switch until you have read the Software Release Notes included with the latest release of the AT-S63 Management Software. This module may not be appropriate for all network environments because a stack does not support all the features of the AT-S63 Management Software.

Terminal Port

The terminal port is used to establish a local (out-of-band) management session with the switch and configure the switch's operating parameters. You establish a local management session with the switch by connecting a terminal or a personal computer with a terminal emulation program to the port.

Note
You can use the AT-9400 Switch as an unmanaged switch if the default settings of the AT-S63 Management Software are adequate for your network. For a list of the default settings, refer to the *AT-S63 Management Software Features Guide*.

The terminal port has an RJ-45 style connector. An RJ-45 to RS-232 management cable is supplied with the switch.

The terminal port is set to the following specifications:

- Default baud rate: 9600 bps (Range is 9600 to 115200 bps)
- Data bits: 8
- Parity: None
- Stop bits: 1
- Flow control: None

Note
These settings are for a DEC VT100 or ANSI terminal, or an equivalent terminal emulation program.

Power Over Ethernet

The following discussion applies only to the AT-9424T/POE Gigabit Ethernet switch.

The twisted pair ports on the AT-9424T/POE switch feature Power over Ethernet (PoE). PoE is a mechanism for supplying power to network devices over the same twisted pair cables used to carry network traffic. This feature can simplify network installation and maintenance by allowing you to use the switch as a central power source for other network devices.

A device that receives its power over an Ethernet cable is called a *powered device*. Examples of such devices can be wireless access points, IP telephones, web cams, and even other Ethernet switches. A powered device connected to a port on the switch will receive both network traffic and power over the same twisted pair cable.

There are several advantages that the PoE feature of the AT-9424T/POE switch adds to the installation and maintenance of your network. First, because the switch acts as the central power source for your powered devices, adding an uninterruptible power source (UPS) to the switch increases the protection not just to the switch itself from possible power source problems but also to all of the powered devices connected to it. This can increase the reliability of your network by minimizing the impact to network operations from a power failure.

PoE can also simplify the installation of your network. A frequent issue in selecting a location for a network device is whether there is a power source nearby. This often limits equipment placement or requires the added cost and time of having additional electrical sources installed. With PoE, you can install PoE-compatible network equipment wherever they are needed without having to worry about whether they are near a power source.

The switch automatically determines whether or not a device connected to a port is a powered device. A powered device has a signature resistor or signature capacitor that the switch can detect over the Ethernet cabling. If the resistor or capacitor is present, the switch assumes that the device is a powered device.

Power Budgeting

The AT-9424T/POE Gigabit Ethernet Switch provides a of 15.4 W maximum of power per port on all 24 ports for a total power consumption of 370 W, while at the same time furnishing standard 10/100/1000 Mbps Ethernet functionality.

The AT-9424T/POE smart power management functionality supports any combination of Ethernet ports (1-24) that supply power for IEEE 802.3af Class 0, 1, 2, or 3 powered devices up to a maximum of 370 watts, as

described in Table 8. .

Table 8. IEEE 802.3af Class vs. Power Levels

Class	Usage	Minimum Power Levels Output at the PSE	Maximum Power Levels Output at the PD
0	Default	15.4W	0.44W to 12.95W
1	Optional	4.0W	0.44W to 3.84W
2	Optional	7.0W	3.84W to 6.49W
3	Optional	15.4W	6.49W to 12.95W

A port connected to a network node that is not a powered device (that is, a device that receives its power from another power source) functions as a regular Ethernet port, without PoE. The PoE feature remains enabled on the port but no power is delivered to the device.

Implementation

A standard Ethernet twisted pair cable contains four pairs of strands for a total of eight strands. 10/100/1000 Mbps network traffic requires only four strands (1, 2, 3, and 6), leaving four strands in the cable unused (4, 5, 7, and 8).

The PoE standard, IEEE 802.3af, describes two alternative ways for delivering power to a powered device (PD) over twisted pair cabling. Alternative A uses the same strands that carry the network traffic. Alternative B uses the spare strands. The PoE implementation on the AT-9424T/POE Gigabit Ethernet Switch is Alternative A, where power is transmitted over strands 1, 2, 3, and 6.

PD’s that comply with the IEEE 802.3af standard typically support both power delivery methods. So long as a PD is compliant with the standard, it should be able to receive its power from the switch while using either a straight or cross-over cable. The PoE feature on the AT-9424T/POE Gigabit Ethernet Switch should also work with most legacy PD’s as long as the device can be powered on pins 1, 2, 3, and 6. A legacy device is a node that was manufactured before the IEEE 802.3af standard was completed and, consequently, may not adhere to the standard. If this is the case, a cross-over (MDI-X) cable may be needed to insure that the DC polarity is correct.

AT-RPS3204 Redundant Power Supply

The RPS connector on the back panel of the switch connects to the optional AT-RPS3204 redundant power supply unit, shown in Figure 14. The unit can provide power to the switch in the event that the switch's internal power supply fails.

The AT-RPS3204 redundant external power supply features one preinstalled AT-PWR3204 Power Module and three empty slots for additional power modules. Each power module can support one switch. When fully populated with AT-PWR3204 Power Modules, the AT-RPS3204 unit can support up to four switches simultaneously. For information about installing an AT-RPS3204 unit, consult the documentation shipped with the unit.

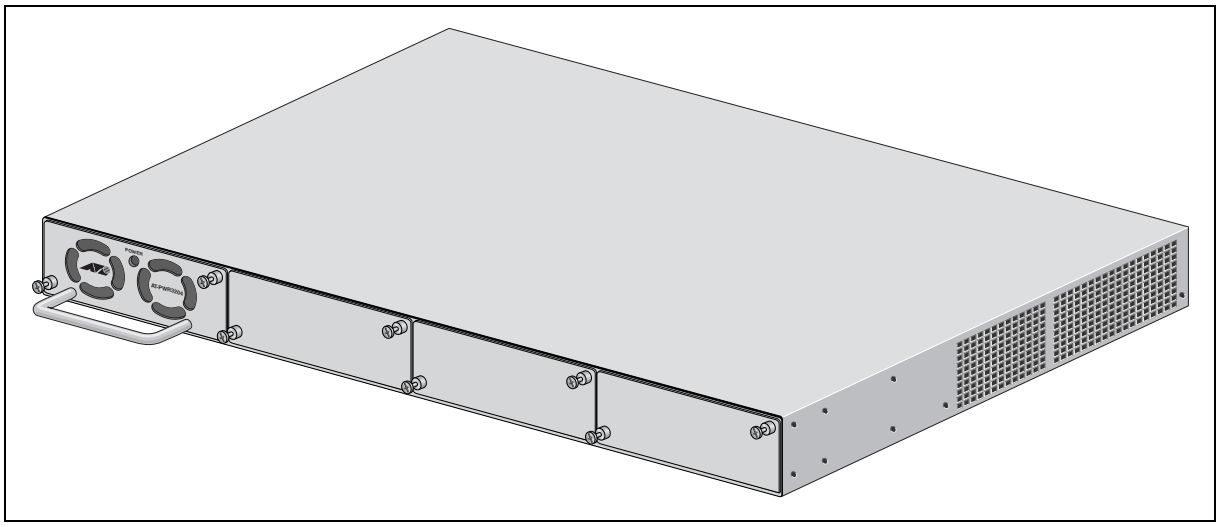

Figure 14 AT-RPS3204 Redundant Power Supply Unit

The pinouts for the redundant power supply's 21-pin D-combo port and connector are described in "RPS 21-pin D-combo Port and Connector Pinouts" on page 83.

AC Power Connector

The AT-9400 Switches have a single AC power supply socket on the back panel, which has autoswitch AC inputs. To power the switch on or off, connect or disconnect the power cord.

Refer to “Technical Specifications” on page 77 for the input voltage range.

Chapter 2

Installing the Switch

This chapter contains the installation procedures for the switch. The chapter contains the following sections:

- ❒ “Reviewing Safety Precautions” on page 46
- ❒ “Selecting a Site” on page 49
- ❒ “Twisted Pair and Fiber Optic Cable Specifications” on page 50
- ❒ “Unpacking the Switch” on page 52
- ❒ “Installing the Power Cord Retaining Clip (AC Switches Only)” on page 53
- ❒ “Installing the Switch in a Rack” on page 54
- ❒ “Installing Optional Transceivers” on page 56
- ❒ “Cabling the Twisted Pair or Fiber Optic Ports” on page 61
- ❒ “Applying AC Power” on page 62
- ❒ “Starting a Local Management Session” on page 64
- ❒ “Warranty Registration” on page 66

Reviewing Safety Precautions

Please review the following safety precautions before you begin to install the switch or any of its components.

Note
The ✍ indicates that a translation of the safety statement is available in a PDF document titled “Translated Safety Statements” (613-000990) posted on the Allied Telesis website at www.alliedtelesis.com. This document is also included with the documentation CD that is shipped with the product.

Warning: Class 1 Laser product. ✍L1

Warning: Do not stare into the laser beam. ✍L2

Warning: To prevent electric shock, do not remove the cover. No user-serviceable parts inside. This unit contains hazardous voltages and should only be opened by a trained and qualified technician. To avoid the possibility of electric shock, disconnect electric power to the product before connecting or disconnecting the LAN cables. ✍E1

Warning: Do not work on equipment or cables during periods of lightning activity. ✍E2

Warning: Power cord is used as a disconnection device. To de-energize equipment, disconnect the power cord. ✍E3

Warning: Class I Equipment. This equipment must be earthed. The power plug must be connected to a properly wired earth ground socket outlet. An improperly wired socket outlet could place hazardous voltages on accessible metal parts. ✍E4

Pluggable Equipment. The socket outlet shall be installed near the equipment and shall be easily accessible. ✍E5

Caution: Air vents must not be blocked and must have free access to the room ambient air for cooling. ✍E6

Warning: Operating Temperature. This product is designed for a maximum ambient temperature of 40° degrees C. E7

All Countries: Install product in accordance with local and National Electrical Codes. E8

Circuit Overloading: Consideration should be given to the connection of the equipment to the supply circuit and the effect that overloading of circuits might have on overcurrent protection and supply wiring. Appropriate consideration of equipment nameplate ratings should be used when addressing this concern. E21

Caution: Risk of explosion if battery is replaced by an incorrect type. Replace only with the same or equivalent type recommended by the manufacturer. Dispose of used batteries according to the manufacturer's instructions.

Attention: Le remplacement de la batterie par une batterie de type incorrect peut provoquer un danger d'explosion. La remplacer uniquement par une batterie du même type ou de type équivalent recommandée par le constructeur. Les batteries doivent être éliminées conformément aux instructions du constructeur. E22

Warning: Mounting of the equipment in the rack should be such that a hazardous condition is not created due to uneven mechanical loading. E25

Warning: This unit might have more than one power cord. To reduce the risk of electric shock, disconnect all power cords before servicing the unit. E30

If installed in a closed or multi-unit rack assembly, the operating ambient temperature of the rack environment may be greater than the room ambient temperature. Therefore, consideration should be given to installing the equipment in an environment compatible with the manufacturer's maximum rated ambient temperature (Tmra). E35

Caution: Installation of the equipment in a rack should be such that the amount of air flow required for safe operation of the equipment is not compromised. E36

Warning: Reliable earthing of rack-mounted equipment should be maintained. Particular attention should be given to supply connections other than direct connections to the branch circuits (e.g., use of power strips). E37

Warning: To reduce the risk of electric shock, the PoE ports on this product must not connect to cabling that is routed outside the building where this device is located. E40

Caution: The unit does not contain serviceable components. Please return damaged units for servicing.

Caution: The AT-9424POE Ethernet ports are only intended for installation in Environment A as defined in IEEE 802.3af. All interconnected equipment must be contained in the same building including the interconnected equipment's associated LAN connections.

Caution: The surface-mounted fuses F1 to F24 on the Power over Ethernet daughter board in the AT-9424POE switch are rated a 60V, max 2A. These fuses are not field-replaceable and should only be serviced by a trained Allied Telesis service technician.

Selecting a Site

Observe the following requirements when choosing a site for the switch.

- ❒ If you plan to install the switch in an equipment rack, check to be sure the rack is safely secured and will not tip over. Devices in a rack should be installed starting at the bottom, with the heavier devices near the bottom of the rack.
- ❒ If you are installing the switch on a table, be sure the table is level and secure.
- ❒ The power outlet for the switch should be located near the unit and be easily accessible.
- ❒ The site should provide easy access to the ports on the front of the switch. This will make it easy for you to connect and disconnect cables, as well as view the switch's LEDs.
- ❒ To allow proper cooling of the switch, air flow around the unit and through its vents on the side and rear should be unrestricted.
- ❒ Do not place objects on top of the switch.
- ❒ Do not expose the switch to moisture or water.
- ❒ Make sure that the site is a dust-free environment.
- ❒ Use dedicated power circuits or power conditioners to supply reliable electrical power to the network devices.

Twisted Pair and Fiber Optic Cable Specifications

Twisted Pair Cable Specifications

Table 9 lists the cabling specifications for the 10/100/1000Base-T twisted pair ports.

Table 9. Twisted Pair Cabling and Distances

Speed	Cable Type	Maximum Operating Distance
10 Mbps	Standard TIA/EIA 568-B-compliant Category 3 or better shielded or unshielded cabling with 100 ohm impedance and a frequency of 16 MHz.	100 m (328 ft)
100 Mbps	Standard TIA/EIA 568-A-compliant Category 5 or TIA/EIA 568-B-compliant Enhanced Category 5 (Cat 5e) shielded or unshielded cabling with 100 ohm impedance and a frequency of 100 MHz.	100 m (328 ft)
1000 Mbps	Standard TIA/EIA 568-A-compliant Category 5 or TIA/EIA 568-B-compliant Enhanced Category 5 (Cat 5e) shielded or unshielded cabling with 100 ohm impedance and a frequency of 100 MHz.	100 m (328 ft)

Note
The auto-MDI/MDI-X feature on the twisted pair ports automatically configures the MDI/MDI-X setting when a link is established with an end node. Available when a port is at the default setting of Auto-Negotiation, this feature allows you to use a straight-through twisted pair cable when connecting any type of network device to a port.

Disabling Auto-Negotiation on a port and setting the speed and duplex mode manually also disables the auto-MDI/MDI-X feature. A port where Auto-Negotiation has been disabled defaults to MDI-X. Disabling Auto-Negotiation may require manually configuring a port’s MDI/MDI-X setting or using a crossover cable.

Note
The speed of a 10/100/1000Base-T twisted pair port on the switch must be set to Auto -Negotiation, the default setting, if the port is to operate at 1000 Mbps. A 10/100/1000Base-T twisted pair port cannot be manually set to 1000 Mbps.

Fiber Optic Cable Specifications

Table 10 lists the fiber optic cable specifications for ports 1 to 8 on the AT-9408LC/SP Switch. For optical specifications, refer to “AT-9408LC/SP Switch 1000Base-SX Port Specifications” on page 82.

Table 10. Fiber Optic Cabling and Distances

Cable Type	Maximum Operating Distance
62.5/125 µm (core/cladding) multimode fiber optic cable	275m
50/125 µm multimode fiber optic cable	550m

Optional Transceiver Cable Specifications

The cable specifications for the optional GBIC, SFP, and XFP transceivers can be found in the installation guide shipped with the transceiver.

Unpacking the Switch

To unpack the switch, perform the following procedure:

1. Remove all components from the shipping package.

   Note
   Store the packaging material in a safe location. You must use the original shipping material if you need to return the unit to Allied Telesis.

2. Place the switch on a level, secure surface.

3. Make sure the following components are included in your switch package. If any item is missing or damaged, contact your Allied Telesis sales representative for assistance.

   - ❒ One AT-9400 Gigabit Ethernet Switch
   - ❒ Two rack-mount brackets
   - ❒ Eight flathead Phillips rack-mount bracket screws
   - ❒ AC power cord (AC switches only; Americas, EU, Australia, and UK only)
   - ❒ AC power cord retaining clip (AC switches only)
   - ❒ Management cable for local management
   - ❒ Documentation CD
   - ❒ Warranty card

Installing the Power Cord Retaining Clip (AC Switches Only)

Perform the following procedure to install the power cord retaining clip on the AT-9400 Switch:

1. Locate the power cord retaining clip, as shown in Figure 15.

Figure 15. Power Cord Retaining Clip

2. Install the clip on the AC power connector on the back panel of the switch. With the “u” of the clip facing down, press the sides of the clip toward the center and insert the short ends into the holes in the retaining bracket, as shown in Figure 16.

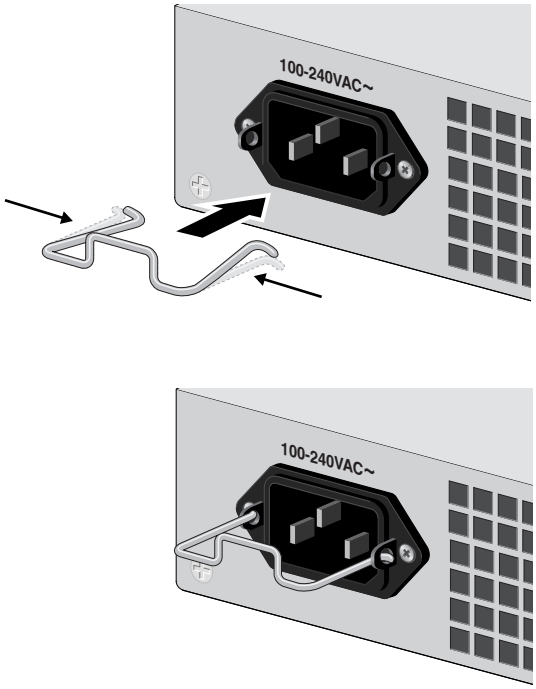

Figure 16. Inserting the Retaining Clip into the Retaining Bracket

Installing the Switch in a Rack

Perform the following procedure to install the switch in a standard 19-inch rack:

> **Note**
> Steps 1, 2, and 3 are optional. They remove the snap-on plastic feet from the bottom of a switch. The feet can be left on.

1. Place the unit upside down on a level, secure surface.
2. Using a flat-head screwdriver, remove the snap-on plastic feet from the bottom of the switch, as shown in Figure 17.

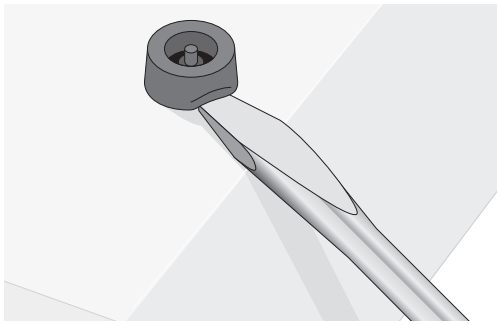

Figure 17. Removing the Feet

3. Turn the switch over.
4. Attach a rack-mount bracket to one side of the switch using four of the screws that come with the switch, as shown in Figure 18.

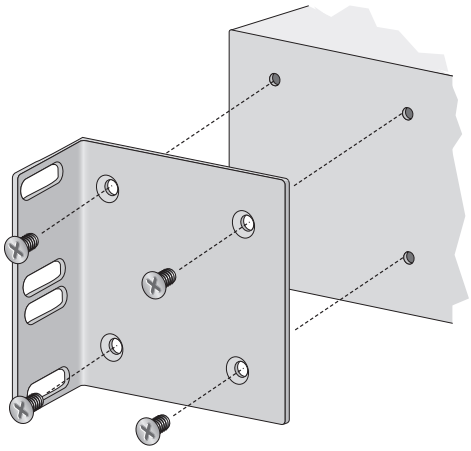

Figure 18. Attaching Rack-Mount Brackets

5. Install the second rack-mount bracket on the other side of the switch using the four remaining screws.

6. Mount the switch in the 19-inch rack using standard screws (not provided), as shown in Figure 19.

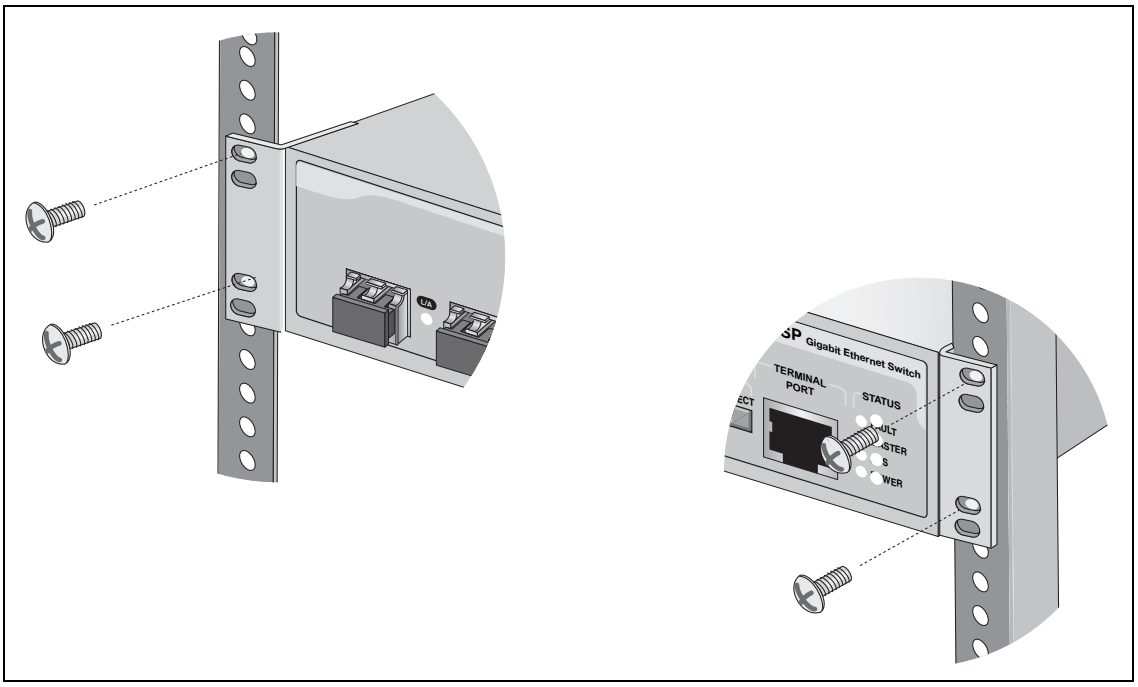

Figure 19. Mounting the Switch in a Rack

Installing Optional Transceivers

Review the following guidelines before installing an optional GBIC, SFP or XFP transceiver in the switch:

- ❒ A transceiver can be hot-swapped. The switch can be powered on when you install a transceiver.
- ❒ Install the transceiver before connecting its network cable.
- ❒ Fiber optic transceivers are dust sensitive. When a fiber optic cable is not installed, or when you store the transceiver, always keep the plug in the optical bores. When you do remove the plug, keep it for future use.
- ❒ Unnecessary removal or insertion of a transceiver can lead to premature failure.
- ❒ The SFP and GBIC slots on some AT-9400 Switches are paired with twisted pair ports. For operational information, refer to “Redundant Twisted Pair Ports” on page 32.

Warning
A transceiver can be damaged by static electricity. Be sure to observe all standard electrostatic discharge (ESD) precautions, such as wearing an antistatic wrist strap, to avoid damaging the device.

Installing a GBIC Transceiver

To install a GBIC transceiver in the AT-9424T/GB Switch, perform the following procedure:

1. Remove the transceiver from its shipping container and store the packaging material in a safe location.
2. Slide the GBIC transceiver into the slot until it clicks into place, as shown in Figure 20. A GBIC transceiver can be installed in either slot.

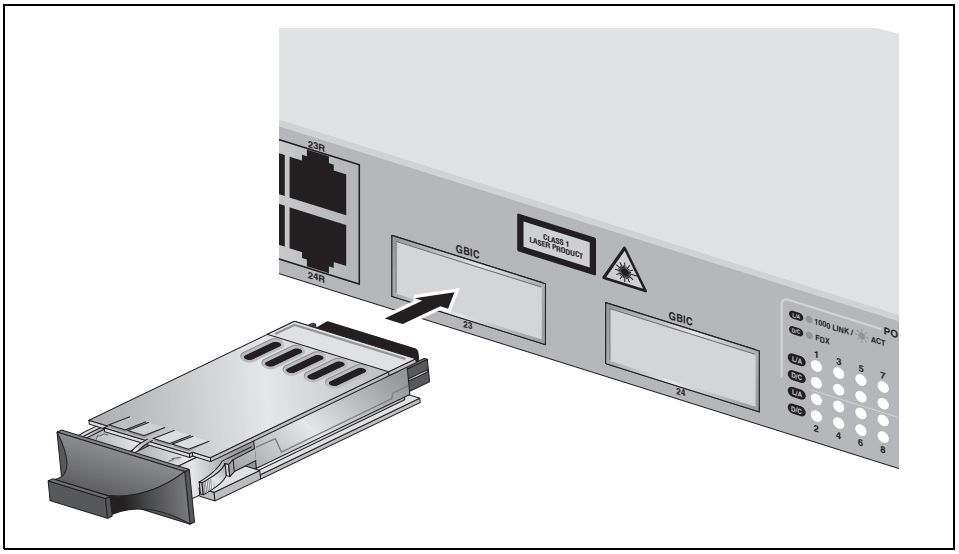

Figure 20. Installing a GBIC Transceiver

3. Repeat this procedure to install another GBIC transceiver or go to “Cabling the Twisted Pair or Fiber Optic Ports” on page 61.

   For GBIC optical and cabling specifications, consult the documentation shipped with the module.

Installing an SFP Transceiver

To install an SFP transceiver in the AT-9408LC/SP, AT-9424T/SP, AT-9424T, AT-9424Ts, AT-9424Ts/XP or AT-9448T/SP Switch, perform the following procedure:

1. Remove the dust plug from a transceiver slot on the switch, as shown in Figure 21.

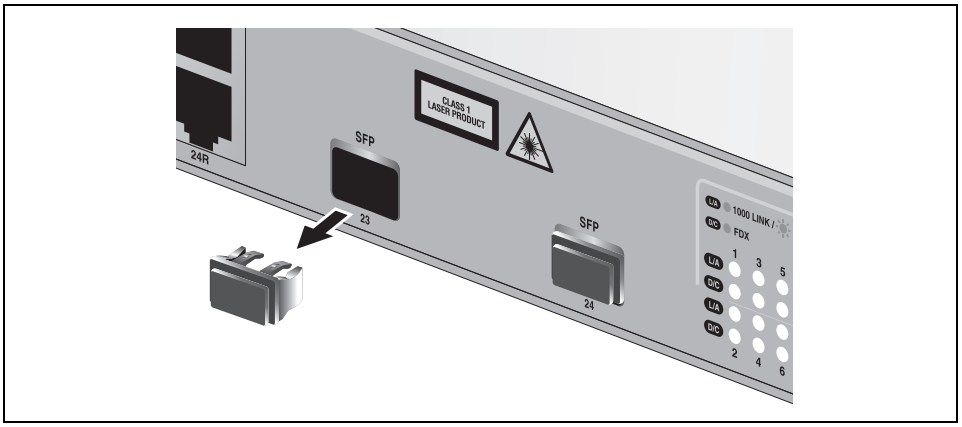

Figure 21. Removing a Dust Plug for an SFP Slot

2. Remove the transceiver from its shipping container and store the packaging material in a safe location.

3. Position the transceiver with the label facing up.
4. Slide the transceiver into the slot until it clicks into place.

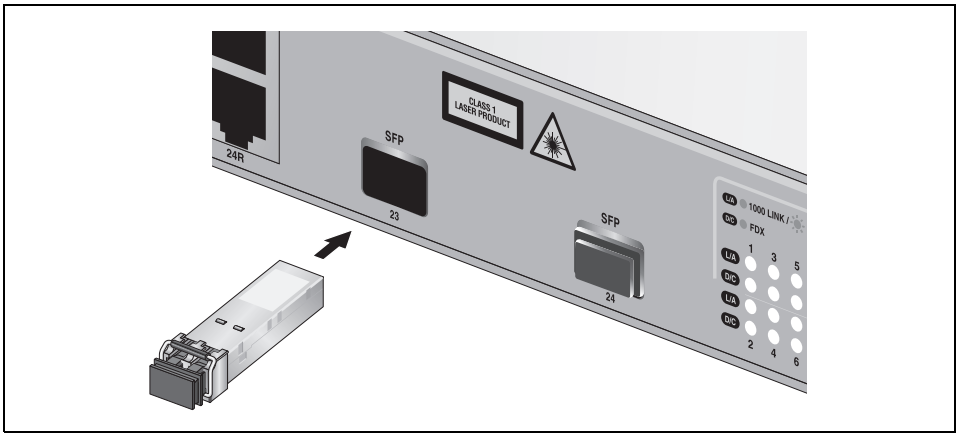

Figure 22. Installing an SFP Transceiver

5. Verify that the handle on the SFP transceiver is in the upright position, as shown in Figure 23, to prevent inadvertently removing the transceiver.

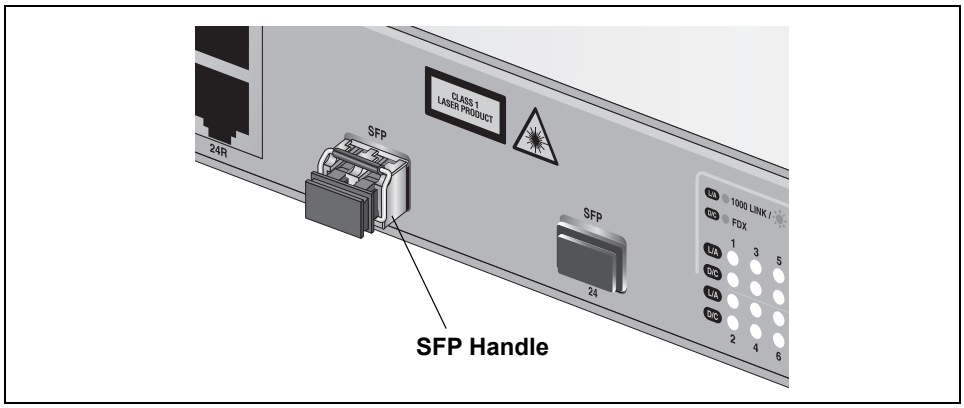

Figure 23. Positioning the SFP Handle in the Upright Position

6. Repeat this procedure to install another SFP transceiver or go to “Cabling the Twisted Pair or Fiber Optic Ports” on page 61.

   For SFP optical and cabling specifications, consult the documentation shipped with the module.

Installing an XFP Transceiver

To install an XFP transceiver in the AT-9424Ts/XP or AT-9448Ts/XP Switch, perform the following procedure:

1. Remove the dust plug from a transceiver slot on the switch. Refer to Figure 24.

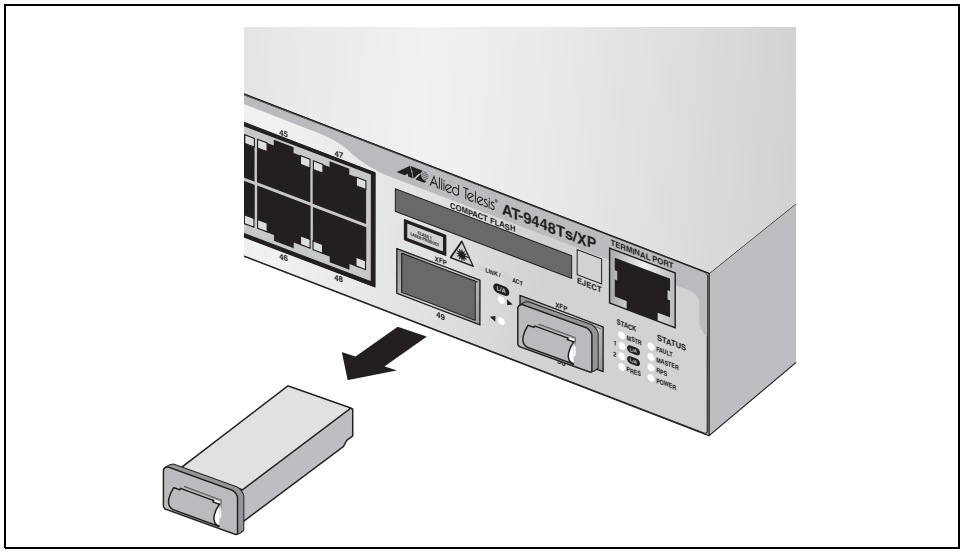

Figure 24. Removing an XFP Dust Plug

2. Remove the transceiver from its shipping container and store the packaging material in a safe location.

3. Position the transceiver with the label facing down.

4. Slide the transceiver into the slot until it clicks into place, as shown in Figure 25.

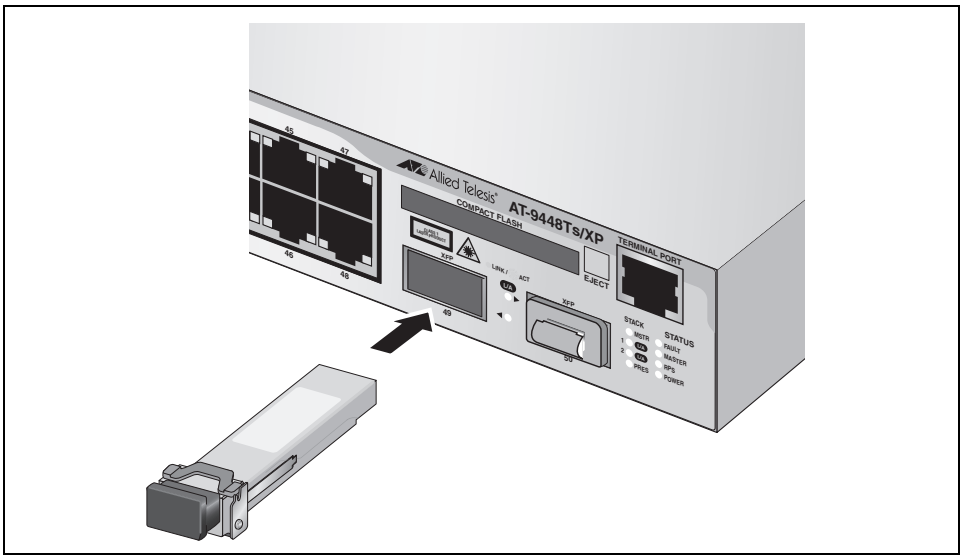

Figure 25. Installing an XFP Transceiver

5. Repeat this procedure to install a second XFP transceiver or go to “Cabling the Twisted Pair or Fiber Optic Ports” on page 61.

   For XFP optical and cabling specifications, consult the documentation shipped with the module.

Cabling the Twisted Pair or Fiber Optic Ports

Observe the following guidelines when connecting a twisted pair or fiber optic cable to a port on the switch:

- The connector on the cable should fit snugly into the port on the switch. The tab on the connector should lock the connector into place.
- Because the twisted pair ports on the switch are auto-MDI/MDI-X, any type of network device can be connected to a port on the switch using a straight-through twisted pair cable. If you disable Auto-Negotiation on the port, the port defaults to MDI-X. For instructions on how to configure a port, refer to the *AT-S63 Management Software User Guides*.
- If your network topology contains a loop where two or more network devices can communicate with each other over more than one network path, do not connect the network cables forming the loop until after you have activated a spanning tree protocol on the switch. Data loops can adversely affect network performance. For background information on the different types of spanning tree protocols supported by the switch, refer to the *AT-S63 Management Software Features Guide*.
- If you are creating a port trunk, you must configure the switch's management software before connecting the cables of the trunk to the switch. Otherwise, a network loop will result which can adversely affect network performance. For background information on the types of port trunks supported by the switch, refer to the *AT-S63 Management Software Features Guide*.
- In order for a switch port to successfully Auto-Negotiate its duplex mode with an end node, the end node should also be using Auto-Negotiation. Otherwise, a duplex mode mismatch can occur. A switch port using Auto-Negotiation defaults to half-duplex if it detects that the end node is not using Auto-Negotiation. This can result in a mismatch if the end node is operating at a fixed duplex mode of full-duplex.

  To avoid this problem, disable Auto-Negotiation on a switch port and set the port's speed and duplex mode manually if the end node has a fixed duplex mode of full-duplex.

Applying AC Power

To apply AC power to the switch, perform the following procedure:

1. Position the power cord retaining clip in the up position, as shown in Figure 26.

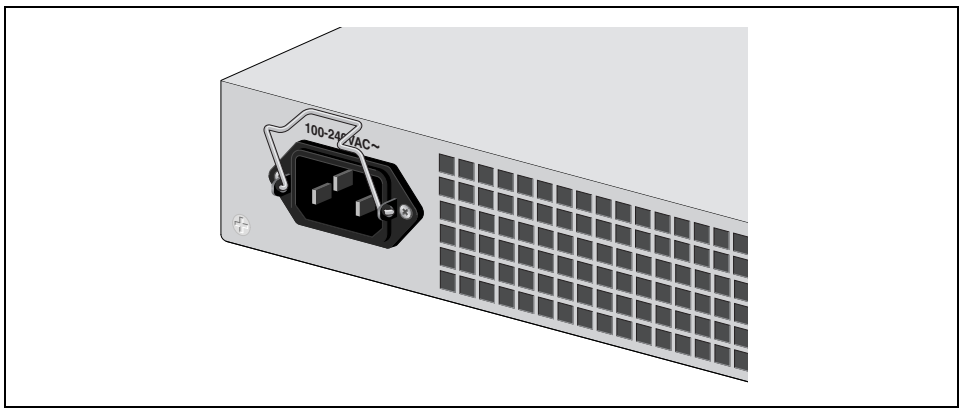

Figure 26. Power Cord Retaining Clip in the Up Position

2. Plug the power cord into the AC power connector on the back panel of the unit (see Figure 27).

Warning: Power cord is used as a disconnection device. To de-energize equipment, disconnect the power cord. E3

Warning: This unit might have more than one power cord. To reduce the risk of electric shock, disconnect all power cords before servicing the unit. E30

.

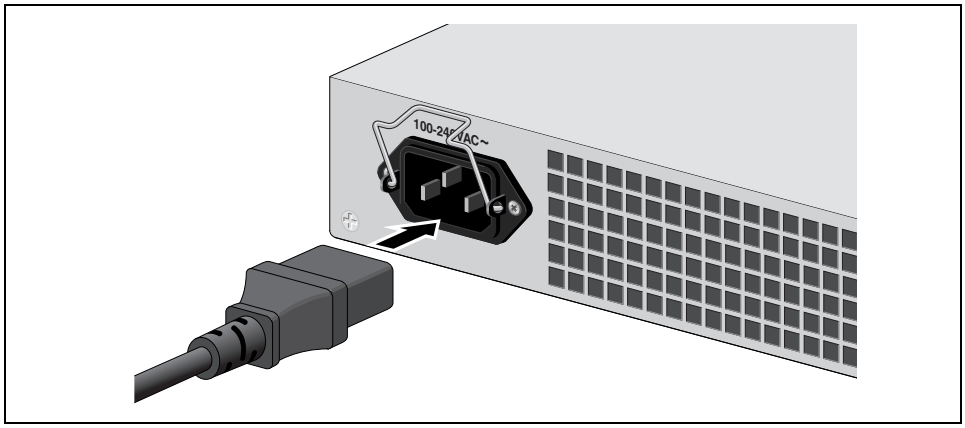

Figure 27. Connecting the AC Power Cord

3. Lower the power cord retaining clip to secure the cord to the switch, as shown in Figure 28.

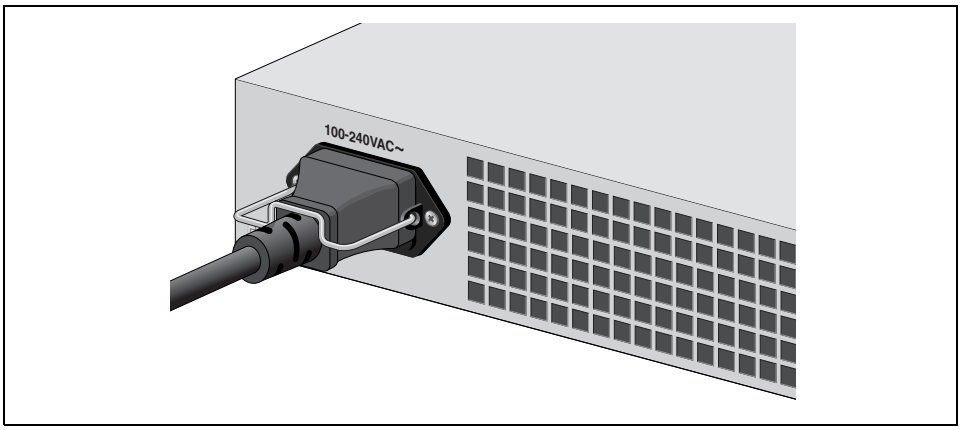

Figure 28. Securing the Power Cord with the Retaining Clip

4. Connect the other end of the power cord to an appropriate AC power outlet. For power specifications for the switch, refer to “Power Specifications” on page 79.

5. If you installed the AT-RPS3204 Redundant Power Supply, refer to the *AT-RPS3204 Redundant Power Supply Installation Guide* for instructions on connecting the RPS unit to the switch.

   When power is applied, the switch begins to load the AT-S63 Management Software. The loading process takes approximately 20 to 30 seconds to complete.

   The switch is now ready for network operations.

   No further installation steps are required if the default parameter settings of the switch, listed in the *AT-S63 Management Software Features Guide*, are adequate for your network. If you want to manage the switch, refer to “Starting a Local Management Session” on page 64.

Starting a Local Management Session

The procedure in this section explains how to start a local (out-of-band) management session using the RJ-45 terminal port on the switch. You can use a local management session to configure the switch's operating parameters and view performance and error statistics.

Note
If your network already has an enhanced stack of Allied Telesis Layer 2 or Layer 2+ switches, you might be able to initially manage the new switch by connecting, locally or remotely, to the master switch of the stack and changing to the new switch through the management software. For overview information on enhanced stacking, refer to the *AT-S63 Management Software Features Guide*.

To start a local management session, perform the following procedure:

1. Connect the RJ-45 end of the management cable included with the AT-9400 Switch to the Terminal Port on the front panel of the switch, as shown in Figure 29.

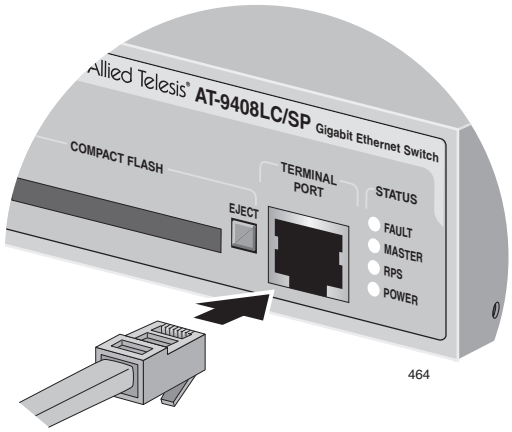

Figure 29. Connecting the Management Cable to the RJ-45 Terminal Port on the Switch

2. Connect the other end of the cable to an RS-232 port on a terminal or a personal computer with a terminal emulation program.

3. Configure the terminal or terminal emulation program as follows:

   - Baud rate: Default is 9600 bps (Range is 9600 to 115200 bps)
   - Data bits: 8
   - Parity: None

- ❒ Stop bits: 1
- ❒ Flow control: None

Note
The port settings are for a DEC VT100 or ANSI terminal, or an equivalent terminal emulator program.

4. Press Enter.

   You are prompted for a user name and password.

5. To configure the switch settings, enter “manager” as the user name. The default password for manager access is “friend.” To just view the settings, enter “operator” as the user name. The default password for operator access is “operator.” User names and passwords are case sensitive.

6. The local management session starts and the command line interface (CLI) prompt is displayed, as shown in Figure 30.

```
 Allied Telesis Ethernet Switch AT-9448Ts/XP - AT-S63
                    <No system name>
#
```

Figure 30. CLI Prompt

   For information about the command line interface, refer to the *AT-S63 Management Software Command Line Interface User’s Guide*.

7. To use the menus interface, type **menu** and press Return.

   The switch’s Main Menu is displayed. For information, refer to the *AT-S63 Management Software Menus Interface User’s Guide*.

8. To select a menu item, type the corresponding letter or number. To return to a previous menu, press the Esc key or type the letter **R**.

Warranty Registration

For warranty information, go to “Warranty” on page 13 or the Allied Telesis web site at www.alliedtelesis.com.

Chapter 3

Troubleshooting

This chapter contains information about how to troubleshoot the switch in the event a problem occurs.

Note
If you are unable to resolve a problem after following the instructions in this chapter, contact Allied Telesis Technical Support for assistance. Refer to “Contacting Allied Telesis” on page 13 for contact information.

Power LED is Off

Check the PWR LED on the front of the switch. If the LED is off, indicating that the unit is not receiving power, do the following:

- ❒ Make sure the power cord is securely connected to the power source and to the AC connector on the back panel of the switch.
- ❒ Verify that the power outlet has power by connecting another device to it.
- ❒ Try connecting the unit to another power source.
- ❒ Try using a different power cord.
- ❒ Check that the voltage from the power source is within the required levels for your region.

Twisted Pair Port Link LED is Off

When a twisted pair port on the switch is connected to a properly operating end node, the Link LED for the port should be on. If a Link LED is off, do the following:

- ❒ Verify that the end node connected to the port is powered ON and is operating properly.
- ❒ Check that the twisted pair cable is securely connected to the port on the switch and to the port on the end node.
- ❒ Make sure that the twisted pair cable does not exceed 100m (328 ft).
- ❒ Verify that you are using the appropriate category of twisted pair cable. For information, refer to Table 9 on page 50.
- ❒ Determine if a crossover cable is required. Since the twisted pair ports feature auto MDI/MDI-X, you should be able to use a straight-through cable regardless of the type of device you connect to a port. However, if you disable Auto-Negotiation on a port and set a port's speed and duplex mode manually, the port defaults to MDI-X. Disabling Auto-Negotiation may require manually configuring a port's MDI/MDI-X setting or using a crossover cable.
- ❒ Make sure that the operating parameters of the port on the switch are compatible with the end node to which the port is connected. This may require using the switch's management software.

Note
A 1000Base-T connection can take from five to ten seconds to establish a link.

- ❒ If a switch port is using Auto-Negotiation, the default setting, to set its speed and duplex mode settings, the end node connected to the port should also be using Auto-Negotiation to prevent a duplex mode mismatch. This can occur because a switch port that is using Auto-Negotiation will default to the half-duplex mode if it detects that the end node is not using Auto-Negotiation. If the end node is operating at a fixed duplex mode of full-duplex, the result will be a mismatch of settings on the two devices, with the switch port using half-duplex and the end node using full-duplex.

  To avoid this problem, you should disable Auto-Negotiation on a switch port and set the port's speed and duplex mode manually if the end node has a fixed duplex mode of full-duplex.

- ❒ The switch has a bad cable detection feature that enables it to determine if a twisted pair cable has a electrical short that might cause a network loop. If the switch detects a bad cable on a port, it does not establish a link on that port. Try replacing the cable.

Fiber Optic Port Link LED is Off

When a fiber optic port on the switch is connected to a properly operating end node, the Link LED for the port should be on. If a Link LED is off, do the following:

- ❒ Verify that the end node connected to the port is powered ON and is operating properly.
- ❒ Check that the fiber optic cable is securely connected to the port on the switch and the port on the end node.
- ❒ If the fiber optic port is on a GBIC, SFP, or XFP transceiver, check to be sure that the transceiver is firmly inserted into the slot on the switch.
- ❒ Make sure that you are using the appropriate type of fiber optic cable and that the cable length does not exceed the allowed maximum distance. The cable specifications for the ports on the AT-9408LC/SP Switch are listed in Table 10 on page 51. For cable specifications for an SFP or GBIC module, refer to the installation instructions shipped with the module.
- ❒ Use a fiber optic tester to test the attenuation on the cable and the strength of the optical signal. The operating specifications for the ports on the AT-9408LC/SP Switch are listed in Table 16 on page 82. For operating specifications for an SFP or GBIC module, refer to the installation instructions shipped with the module.
- ❒ Check that the operating specifications (for instance, wavelength and maximum operating distance) of the fiber optic port on the remote end node are compatible with the fiber optic port on the switch.
- ❒ Check to be sure that the fiber optic ports on the switch and on the end node are operating at the same speed and duplex mode.
- ❒ A fiber optic cable contains two separate fiber strands. One strand is for receiving data and the other is for transmitting data. When you connect a fiber optic cable to a port, be sure that the receive fiber connector is connected to the transmit connector on the remote end node, and that the transmit fiber connector is connected to the receive connector on the remote node.

Note
The L/A LED for an SFP transceiver slot may remain ON if you remove the transceiver when it has a link to an end node without first disconnecting the fiber optic cable. The L/A LED will change to OFF the next time an SFP module is installed in the slot. To avoid this, always disconnect the fiber optic cable before removing a transceiver.

Transceiver is Installed but the Status is “Not Present”

If a GBIC, SFP, or XFP transceiver is installed in a transceiver slot but the Uplink Information menu in the AT-S63 Management Software interface displays “Not Present” for that port, do the following:

- ❒ Verify that the transceiver is completely inserted in the slot on the front of the switch.

Note
The uplink status does not reflect whether a fiber optic cable is connected to the transceiver.

System Fault LED is Blinking

If the system FAULT LED is blinking, no action is required. A blinking FAULT LED could indicate that a new version of the management software is being downloaded to the switch or the switch's is updating the active boot configuration file. The LED stops blinking after the switch has completed the download or updating the boot configuration file.

System Fault LED is Steadily On

If the system FAULT LED is steadily on, a problem has occurred in the switch. Do the following:

- ❒ Try resetting the switch by disconnecting and reconnecting the AC power cord.
- ❒ If the FAULT LED remains ON, try downloading a new version of the switch's management software. For instructions, refer to the *AT-S63 Management Software User Guides*.

Note
If the FAULT LED remains steadily on, contact Allied Telesis Technical Support for assistance.

Cannot Establish a Local (Out-of-Band) Management Session

If you are unable to establish a local (out-of-band) management session with the switch through the terminal port on the front panel, do the following:

- ❒ Check to be sure that the RJ-45 serial management cable is securely connected to the serial terminal port on the switch and to the RS-232 port on the terminal or personal computer.
- ❒ Check to be sure that the operating parameters on the terminal or the terminal emulation program have been set correctly. The default settings for the RJ-45 serial terminal port are located in “Starting a Local Management Session” on page 64.

Switch Functions Intermittently

If the switch functions intermittently, check the system hardware status through the management interface:

- ❒ Note the current voltage for the power supply compared to the optimum rating.
- ❒ Verify that the system temperature is within the operating range.
- ❒ Review the fan speeds to verify the fans are operating properly.

Appendix A

Technical Specifications

Physical Specifications

See Table 11 for information regarding the dimensions of the AT-9400 Series Switches.

Table 11. AT-9400 Series Switch Dimensions

AT-9400 Series Switch	Dimensions (H x W x D)
AT-9408LC/SP	4.4 cm x 44.0 cm x 22.2 cm (1.75 in. x 17.34 in. x 8.75 in.)
AT-9424T/GB	4.4 cm x 44.0 cm x 22.2 cm (1.75 in. x 17.34 in. x 8.75 in.)
AT-9424T/SP	4.4 cm x 44.0 cm x 22.2 cm (1.75 in. x 17.34 in. x 8.75 in.)
AT-9424T	4.4 cm x 43.8 cm x 30.4 cm (1.75 in. x 17.30 in. x 12.0 in.)
AT-9424T/POE	4.4 cm x 44.0 cm x 40.8 cm (1.75 in. x 17.20 in. x 16.1 in.)
AT-9424Ts	4.4 cm x 43.8 cm x 30.4 cm (1.75 in. x 17.30 in. x 12.0 in.)
AT-9424Ts/XP	4.4 cm x 43.8 cm x 30.4 cm (1.75 in. x 17.30 in. x 12.0 in.)
AT-9448T/SP	4.4 cm x 43.8 cm x 30.4 cm (1.75 in. x 17.30 in. x 12.0 in.)
AT-9448Ts/XP	4.4 cm x 43.8 cm x 30.4 cm (1.75 in. x 17.30 in. x 12.0 in.)

See Table 12 for information regarding the weight of the AT-9400 Series Switches.

Table 12. Weight of the AT-9400 Series Switches

AT-9400 Series Switch	Weight
AT-9408LC/SP	3.00 kg (6.65 lb.)
AT-9424T/GB	3.11 kg (6.85 lb.)
AT-9424T/SP	3.11 kg (6.85 lb.)
AT-9424T	4.01 kg (8.85 lb.)
AT-9424Ts	4.21 kg (9.35 lb.)
AT-9424T/POE	6.17 kg (13.60 lb.)
AT-9424Ts/XP	4.23 kg (9.40 lb.)
AT-9448T/SP	4.61 kg (10.15 lb.)
AT-9448Ts/XP	5.09 kg (11.20 lb.)

The recommended minimum clearance for ventilation on all sides of an AT-9400 Series Switch is 10 cm (4.0 in).

Environmental Specifications

Operating Temperature: 0° C to 40° C (32° F to 104° F)

Storage Temperature: -25° C to 70° C (-13° F to 158° F)

Operating Humidity: 5% to 90% noncondensing

Storage Humidity: 5% to 95% noncondensing

Maximum Operating Altitude: 3,048 m (10,000 ft)

Maximum Nonoperating Altitude: 4,000 m (13,100 ft)

Power Specifications

Input Voltage/Current.Freq (All Models except AT-9424T/POE):
AC100-240 VAC, 2.0 A maximum, 50/60 Hz

Input Voltage/Current.Freq (All Models except AT-9424T/POE):
AC100-240 VAC, 6 A maximum, 50/60 Hz

Maximum Power Consumption:

AT-9408LC/SP	58 watts
AT-9424T/GB	54 watts
AT-9424T/SP	54 watts
AT-9424T	60 watts
AT-9424T/POE	450 watts
AT-9424Ts	60 watts
AT-9424Ts/XP	68 watts
AT-9448T/SP	120 watts
AT-9448Ts/XP	128 watts

POE Output Power (AT-9424T/POE only)

Available POE Power:	370 W @ 48 VDC Nominal
IEEE 802.3af Class 3 (15.4 W):	Max 24 ports
IEEE 802.3af Class 2 (7.3 W):	Max 24 ports
IEEE 802.3af Mode:	Alternative A (MDI-X)

Certifications

EMI (Emissions):	FCC Class A, EN55022 Class A, EN61000-3-2, EN61000-3-3, VCCI Class A, C-TICK, CE
EMC (Immunity):	EN55024
Electrical and Laser Safety:	EN60950 (TUV), UL 60950 ($_{C}UL_{US}$) EN60825

Quality and Reliability for AT-9424T:
MTBF > 170,000 hrs.

Quality and Reliability for all other AT-9400 Series Switches:
MTBF > 100,000 hrs.

Compliance Marks: CE, $_{C}UL_{US}$, TUV, C-Tick

RJ-45 Twisted Pair Port Pinouts

Figure 31 illustrates the pin layout of an RJ-45 connector and port.

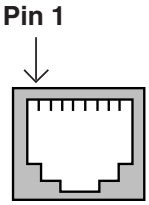

Figure 31. RJ-45 Connector and Port Pin Layout

Table 13 lists the pin signals when a port is operating in the MDI configuration at 10 or 100 Mbps.

Table 13. MDI Pin Signals - 10 or 100 Mbps

Pin	Signal
1	TX+
2	TX-
3	RX+
6	RX-

Table 14 lists the pin signals when a port is operating in the MDI-X configuration at 10 or 100 Mbps.

Table 14. MDI-X Pin Signals - 10 or 100 Mbps

Pin	Signal
1	RX+
2	RX-
3	TX+
6	TX-

The MDI/MDI-X setting is established automatically when a port is set to Auto-Negotiation. If a port's speed and duplex are set manually, the MDI/MDI-X setting defaults to the MDI-X setting.

Table 15 lists the pin signals when a port operating at 1000 Mbps.

Table 15. Pin Signals - 1000 Mbps

Pinout	Pair
1	Pair 1 +
2	Pair 1 -
3	Pair 2 +
4	Pair 3 +
5	Pair 3 -
6	Pair 2 -
7	Pair 4 +
8	Pair 4 -

AT-9408LC/SP Switch 1000Base-SX Port Specifications

Table 16 lists the operating specifications for ports 1 to 8 on the AT-9408LC/SP Switch.

Table 16. 1000Base-SX Port Specifications

Property	Value
Transmitter Characteristics	
Wavelength	850 nm
Output Power	Min: -9.5 dBm Max: -1.5 dBm
Receiver Characteristics	
Input Power	Min: -17 dBm Max: 0 dBm
Stressed Receiver Sensitivity[1]	Max: -12.5 dBm (62.5/125 µm cabling) Max: -13.5 dBm (50/125 µm cabling)
Maximum Operating Distances	
62.5/125 µm (core/cladding) multimode fiber optic cable	275m
50/125 µm multimode fiber optic cable	550m
Connector Type	LC-duplex

1. Performed in accordance with the conformance test signal defined in IEEE 802.3 section 38.6.11.

RJ-45 Style Serial Terminal Port Pinouts

Table 17 lists the pin signals on the RJ-45 style serial terminal port.

Table 17. RJ-45 Style Serial Terminal Port Pin Signals

Pin	Signal
4	Data Carrier Detect
3	Transmit Data
6	Receive Data
7	Data Set Ready
5	Ground
2	Data Terminal Ready
8	Clear to Send
1	Request to Send

RPS 21-pin D-combo Port and Connector Pinouts

Figure 32 illustrates the pin layout of the RPS 21-pin D-combo port and connector.

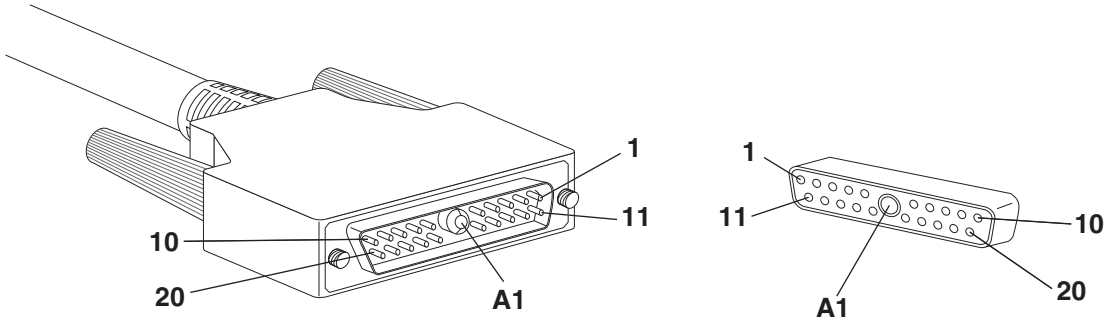

Figure 32. RPS 21-pin D-combo Connector and Port Pin Layout

Table 18 lists the definitions for the RPS 21-pin D-combo port and connector pins.

Table 18. RPS 21-pin D-combo Port and Connector Pin Definitions

Pin	Definition
1	Reserved
2	Fan 2 status
3	Fan 1 status
4	RPS status
5	Ground
6	Ground
7	RPS status
8	+12.0 VDC sense
9	Reserved
10	No connect
11	Ground
12	Ground
13	Ground
14	Ground
15	Ground
16	Ground
17	Ground
18	+12.0 VDC sense
19	Ground
20	No connect
A-1	+12.0 VDC