GA0001002_01

PATLITE®

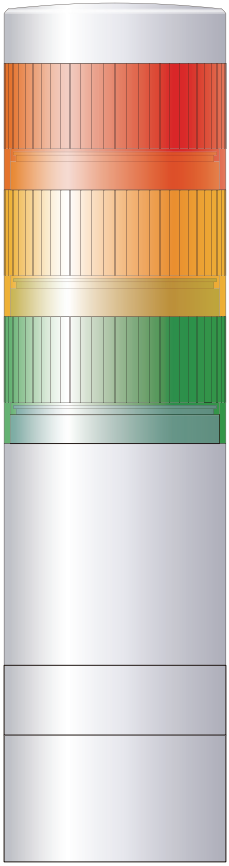

IO-Link Signal Tower

TYPE LR6-IL

Complete Operation Manual

Installation | Operation | Maintenance

		Page
1	Read this First	2
2	Model Number Configuration	2
3	Names and Dimensions of Each Part	3
4	Installation	4
5	Wiring	6
6	How to Use	7
7	Setting the Buzzer	9
8	Unit Detachment Method	10
9	Troubleshooting	22
10	Specifications	23
11	Service Parts	25
12	Optional Parts	26

Notice to Customer

Thank you very much for purchasing our PATLITE products.

- Request the installation and wiring be performed by a professional contractor if construction work is involved.
- Prior to installation, read this manual thoroughly before using this product to ensure correct use.
- If there are any questions concerning this product, refer to the contact information at the end of this document and contact your nearest PATLITE Sales Representative.

To the Contractor

- Read this manual carefully prior to installation.
- Be sure to return this manual to the customer.

1 Read this First

Safety Precautions

The safety precautions that should always be followed in order to prevent injury to user or other individuals as well as prevent damage to property are described below.

■ The level of injury or damage caused by ignoring these safety precautions and using the product improperly is categorized and described below.

⚠Warning	This icon indicates an action with the potential to cause death or serious injury.	⚠Caution	This icon indicates an action with the potential to cause injury, physical loss or damage.

⚠Warning

- Request the installation and wiring be accompanied by **a professional contractor**. If installation is done improperly, it may result in **fire**, **electric shock**, **falling**, or **malfunction**.

⚠Caution

- **Avoid long exposure to the Buzzer sound from a close distance.** Failure to observe this may lead from irritation to permanent damage to the ears. (When Buzzer Unit is used)
- In order to maintain protection of this product against dust and waterproofing performance, **be sure to use the head cover, LED unit and buzzer unit in the condition that it was originally attached**.
- To ensure the waterproofing performance of this product, **do not remove the O-ring or the waterproof packing**. Dust and waterproofing performance will decrease.
- When removing covers or packing from the equipment, which is attached to this product, be careful **not to snag** the product. Failure to comply may result in damage to the product.

Notice

- To ensure proper safety while using the signal tower, observe the following:
  - Perform **periodic pre-maintenance**.
  - As a precaution against problems occurring, **use this product together with other equipment**.
- **Be sure to prevent electrostatic damage** due to discharge when working with this product for wiring, exchanging units, setting up parameters, etc. by discharging static electricity on your body, etc.
  (To prevent damage from static electricity, touch hands or other body parts to metals or an earth ground to discharge the body from static charge.)
- Use a soft cloth, etc., dampened with water to wipe the product. Do not use cleaners containing thinner benzine gasoline, oil, Chemicals, etc., to wipe with. It may result in discoloration and deterioration.
- To ensure safety when this product is installed onto equipment, observe the following:
  - **Do not remove parts** beyond those designed to be removed from this product.
  - **Do not modify or disassemble** this product.
  - Use only the specified replacement parts listed in this document.

2 Model Number Configuration

	Model			Tiers	Extended Functionality	Mounting/ Wiring	Buzzer	Body Color		LED Unit Color
Assembly Model	LR	6	-	3	IL	WM	N	W	-	RYG
Unit Model (Body Unit)	LR	6	-		IL	WM	N	W		
Unit Model (Body Unit)	LR	6	-		IL	WC	N	W		

- 6 Φ60
- 3 Tiers
- IL IO-Link
- N No Flashing
- W Off-white
- WM Direct Mount / M12 Connector (Mounting with 3 Hexagon Bolts)
- WC Direct Mount / M12 Connector (Mounting with M30 Nut)
- LED Color: R (Red) / Y (Amber) / G (Green) (From top to bottom)

■ WM Direct Mount/M12 Connector Specifications (3-point Foot Attachment)

(Unit: mm)

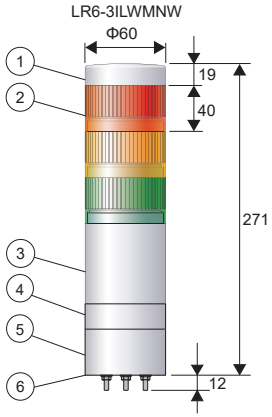

No.	Part Name	Material
1	Head Cover	PC
2	LED Unit	Globe: PC
3	Body	PC
4	M12 Bracket	PC
5	Direct Mount Bracket	PC
6	Waterproof Packing	Silicone Rubber

* M12 connector cable is sold separately.
(Please use an M12 connector of Φ16 or less.)

Accessory
LR6-WM Flanged nut (M4) 3 pcs.

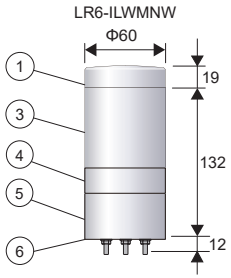

■ WC Direct Mount/M12 Connector Specifications (M30 Nut Attachment)

(Unit: mm)

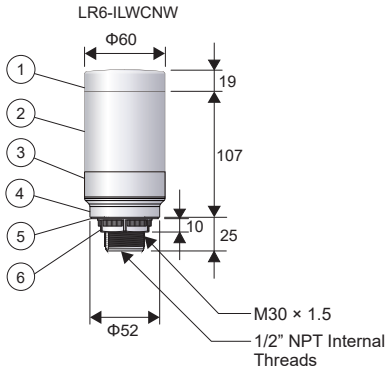

No.	Part Name	Material
1	Head Cover	PC
2	Body	PC
3	M12 Bracket	PC
4	Direct Mount Bracket	PC
5	Waterproof Packing	Silicone Rubber
6	M30 Nut	PC

* M12 connector cable is sold separately.
(Please use an M12 connector of Φ16 or less.)

4 Installation

Notice

- The following requirements are necessary for a proper mounting location.
  - Location with **strong** and **even surface** with **minimal vibration**.
- Install with the mounting direction in the **upright position**.
- When the installation location is unavoidably irregular and waterproof performance is required, use a sealant between the product and the installation surface.

Basic Mounting Instructions

1 **Make holes for the mounting and wire-distribution for the product. (Check the Model and refer to the suitable mounting dimension figure.)**

2 **Connect to the product through the distribution hole.**

3 **Secure the product with the nuts.**

■ WM WC Installation Figure (M12 Connector Installation Figure)

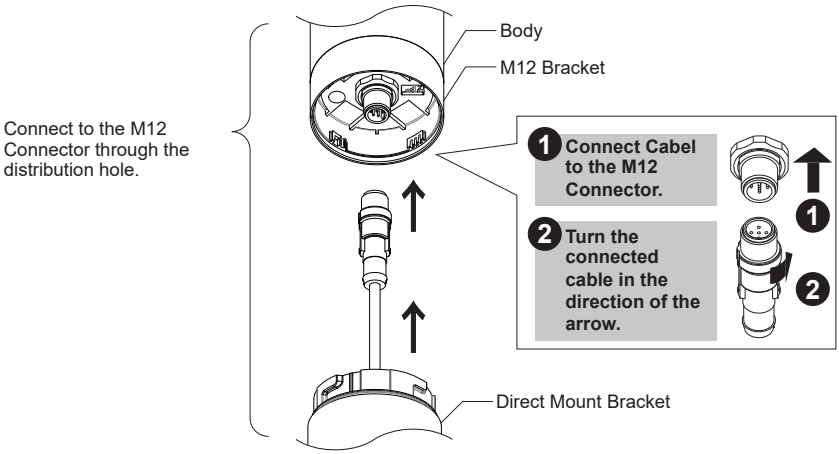

■ WM Mounting Dimensional Drawing

(Unit: mm)

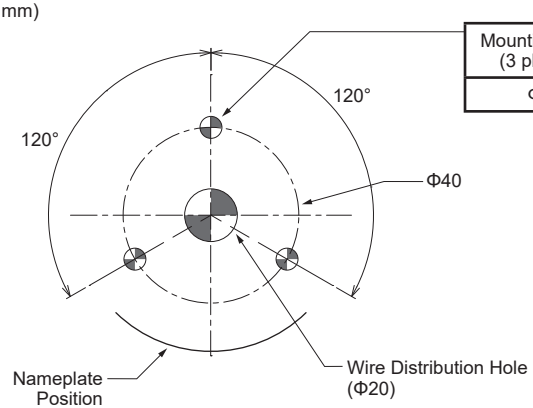

Mounting Hole (3 places)	Screw Nut
Φ5	M4

Recommended Torque
0.6 N·m

■ WC Installation Figure (1/2” NPT Installation Figure)

While holding part ‘A’, install the 1/2” NPT.
Failure to comply may result in damage.

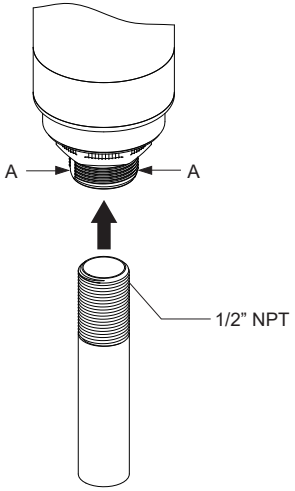

Recommended Torque
2.25 N·m

■ Mounting Dimensional Drawing

(Unit: mm)

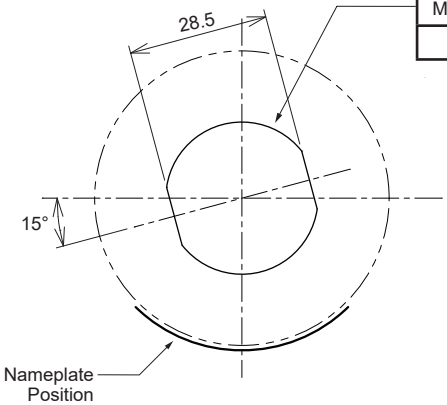

Mounting Hole	Nut
Φ31	M30

Recommended Torque
4.5 N·m

5 Wiring

⚠Warning

- Ensure **the proper working voltage** is used and that **direct current or alternating current** is properly applied.
  Any mistake in wiring may result in damage or fire.Any mistake in wiring may result in damage or fire.

⚠Caution

- **Do not pull** the wire, or **stuff it inside** of this product. Possible cause of failure may occur.

Wiring Example and M12 Connector Pin Layout

■ Wiring Example

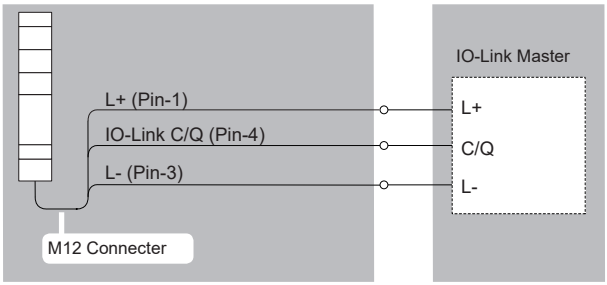

■ M12 Connector Pin Layout

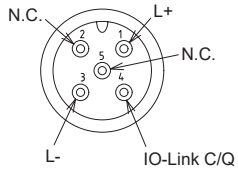

Connector type: M12, 5-pins, A code

6 How to Use

This product is an IO-Link compliant product.
Connect this product by following the “5 Wiring” (p. 6).
The controller can light or flash the LEDs or control the buzzer.
Changing the “Operating Mode” settings enables the following modes:

- Simple Mode
- Advanced Mode

■ Simple Mode

This mode performs simple control by only turning ON and OFF each LED and the buzzer.
Other settings are specified using the parameters.
Send process data by referring to the table below.

	bit 0	bit 1	bit 2	bit 3	bit 4	bit 5	bit 6	bit 7
Byte 0 data	LED Unit (Red) ON / OFF	Not used	Not used	Not used	Not used	Not used	Not used	Not used
Byte 1 data	LED Unit (Amber) ON / OFF							
Byte 2 data	LED Unit (Green) ON / OFF							
Byte 3 data	LED Unit (Blue) ON / OFF							
Byte 4 data	LED Unit (White) ON / OFF							
Byte 5 data	Buzzer ON / OFF							

■ Advanced Mode

This mode performs advanced control such as lighting, flashing, and extinguishing each LED as well as sounding, intermittently beeping, or stopping the buzzer.
Other settings are specified using the parameters.
Send process data by referring to the table below.
Enable the intermittent buzzer settings to repeatedly sound the buzzer for 500 ms and stop the buzzer for 500 ms.
Refer to (p. 8) for the pattern of each LED.

	bit 0	bit 1	bit 2	bit 3	bit 4	bit 5	bit 6	bit 7
Byte 0 data	LED Unit (Red) ON / OFF	Not used			LED pattern (Red)			Not used
Byte 1 data	LED Unit (Amber) ON / OFF	Not used			LED pattern (Amber)			Not used
Byte 2 data	LED Unit (Green) ON / OFF	Not used			LED pattern (Green)			Not used
Byte 3 data	LED Unit (Blue) ON / OFF	Not used			LED pattern (Blue)			Not used
Byte 4 data	LED Unit (White) ON / OFF	Not used			LED pattern (White)			Not used
Byte 5 data	Buzzer ON / OFF	Not used				Buzzer: Intermittent	Not used	

■ LED Pattern

Setting	Description
0	Lit
1	Flash (Slow)
2	Flash (Medium)
3	Flash (Fast)
4	Single Flash
5	Double Flash
6	Triple Flash

Notice

- Settings 4, 5 and 6 cannot be used with the Multicolor LR6-E-MZ of the LED Unit.
  Each LED may not light correctly.
- Settings 4, 5 and 6 cannot be used with the WD transmitter for the wireless data communication system.
  The correct data may not be acquired.

■ Parameter Settings

For information about the parameter settings, please download the IODD from the LR6-IL page on our homepage (https://www.patlite.com/).
Please also download and use the parameter sheet in the same way.

7 Setting the Buzzer

⚠Caution	● **Do not use excess force when performing operations.** Failure to comply will result in damage due to breakage or deformation. ● **Do not use sharp-pointed objects to perform operations.** Failure to comply may result in damage and inoperative switches or hinder contact between contact parts.

Bottom View of the Buzzer Unit

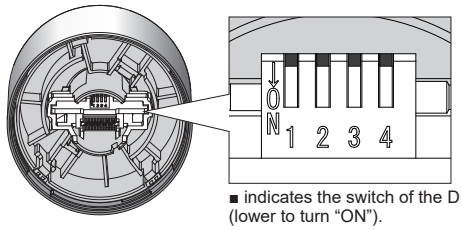

■ indicates the switch of the DIP switch (lower to turn “ON”).

■ Settings Table

Buzzer Sound	DIP Switch 1	DIP Switch 2	Sound Pattern
No. 1	OFF	OFF	Intermittent tone
No. 2	ON	OFF	Continuous tone
No. 3	OFF	ON	High-low tone
No. 4	ON	ON	Sweep sound

DIP Switch 3	Volume
OFF	Normal
ON	Noise reduction

Note: DIP Switch 4 is not used.
The factory default settings have all of the DIP switches in the “OFF” position.

8 Unit Detachment Method

Follow the procedure below to detach a unit, such as when removing the Buzzer Unit or changing the layout of the LED Units.

Link to Video

⚠Caution

- Be sure that it is disconnected from the power source before working on it.
- **Do not apply excessive torque** or **strong shock** to each unit or body. Failure to comply will result in damage or malfunction.
- **Do not touch the connector area or the inside of the body and LED unit.** Failure to comply will result in damage or malfunction.
- **Be sure to lock** each unit securely when attaching. Failure to comply will result in damage or malfunction.
- Detach the unit in the following manner. Any other method may result in damaging the product.
  Attachment: Attach one unit at a time to the body.
  Removal: Firmly hold the bottom section while removing the upper section.

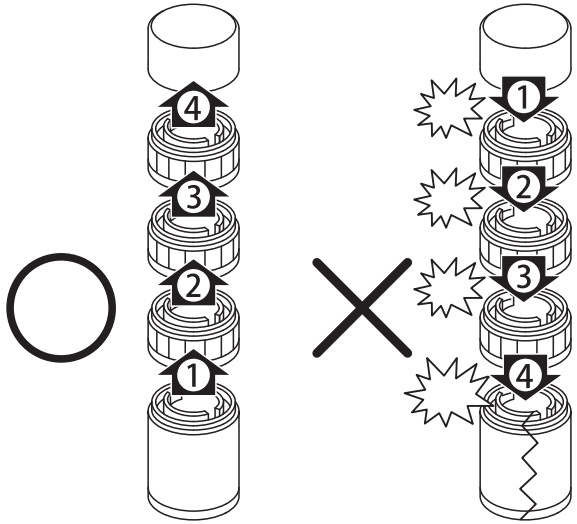

Notice

- The maximum number of attachment units per product are five LED units, plus one buzzer unit.
- When using Multi-Color LED Unit for LR6 60 mm Signal Towers LR6-E-MZ, the maximum number of attachment units per product are one LED unit, plus one buzzer unit.
- When using Wireless Data Acquisition System WD, the maximum number of attachment units per product are three LED units.

<LED/Buzzer Unit>

■ Removal

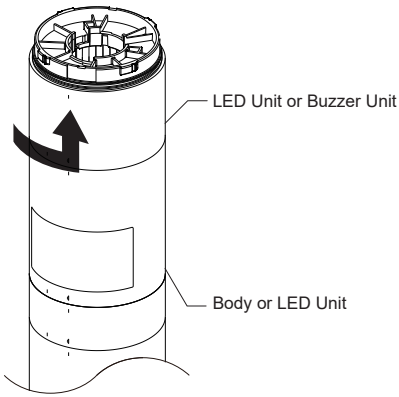

Turn the body or LED unit counter-clockwise to unlock, then raise upwards to remove it.

■ Positioning Mark

<Locked> <Unlocked>

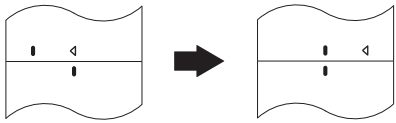

■ Attachment

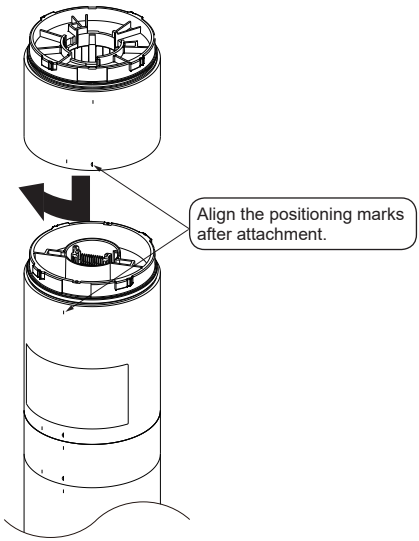

Align the Positioning Mark after insertion, then turn the unit clockwise to lock it.

■ Positioning Mark

<Locked> <Unlocked>

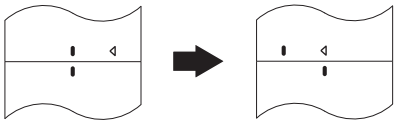

<Body Unit>

■ Removal

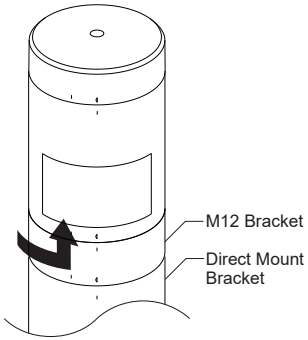

While holding the Direct Mount Bracket, turn the M12 Bracket counter-clockwise, until it unlocks, then pull it upwards to remove.

■ Positioning Mark

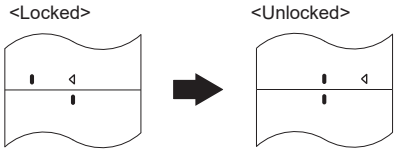

■ Attachment

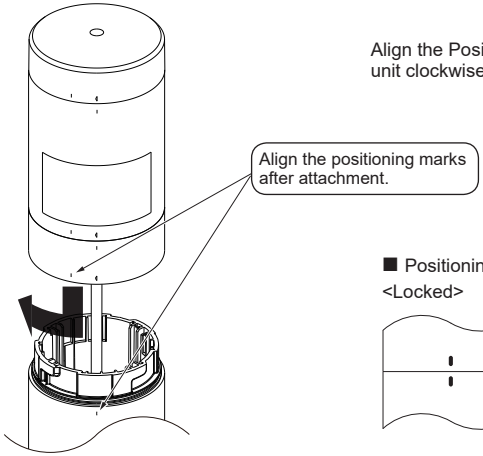

Align the Positioning Mark after insertion, then turn the unit clockwise to lock it.

■ Positioning Mark

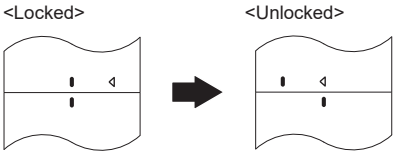

<Troubleshooting the Buzzer Unit Attachment>

The Buzzer Unit is generally in the state shown in the diagram below after removal.

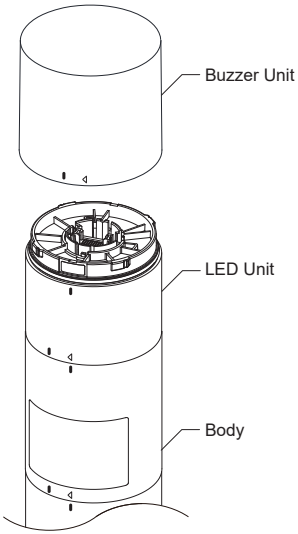

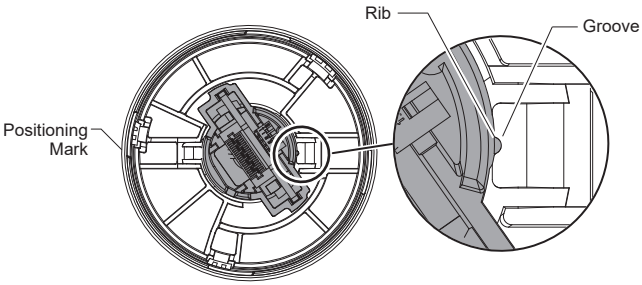

Bottom View of the Buzzer Unit (Detached)

The rib inside of the Buzzer Unit fits into the groove when the Buzzer Unit has been removed from the product.

⚠Caution

Check to make sure the rib inside of the Buzzer Unit fits into the groove if the Buzzer Unit does not attach properly. Attach the Buzzer Unit by referring to the next page if the rib does not fit into the groove as shown in the diagram below.
In addition, the rib may slide out of the groove during removal as shown in the diagram below depending on how the Buzzer Unit was removed.
Attaching the Buzzer Unit to the product again in this state may result in damage.

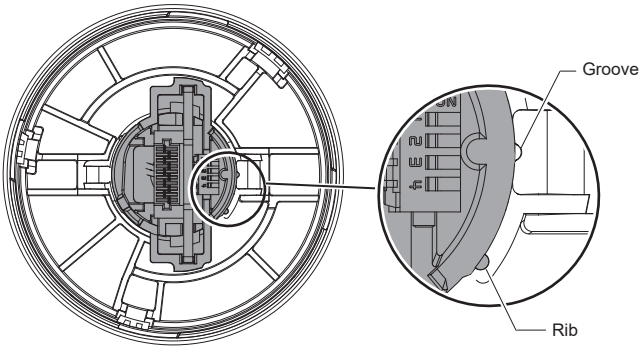

Bottom View of the Buzzer Unit

Use the procedure below if the Buzzer Unit does not attach properly.

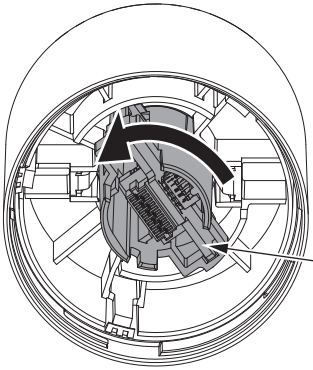

Turn the part inside the Buzzer Unit in the counterclockwise direction.
Turn until the rib fits into the groove, and then attach the Buzzer Unit to the product.

Turn this part in the counterclockwise direction.

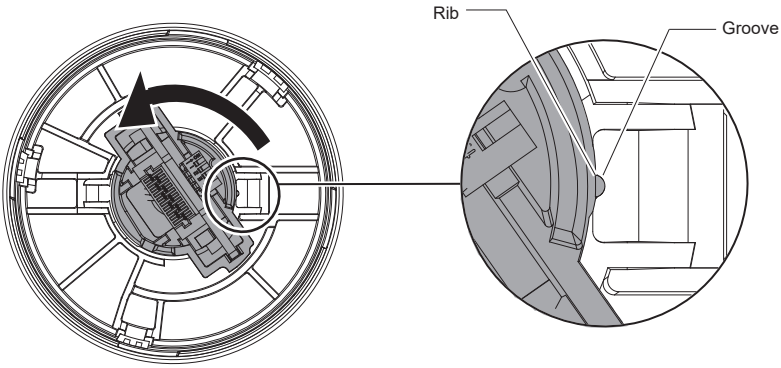

Bottom View of the Buzzer Unit

<Example for Changing the Configuration of the LED Units>

■ Lowering an LED Unit

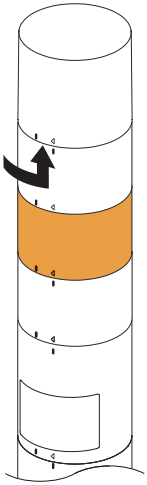

1 Remove the LED Unit right above the LED Unit in the area to remove.

2 Turn the LED Unit to remove counterclockwise while holding the adjacent LED unit to release the lock, and then pull upward.

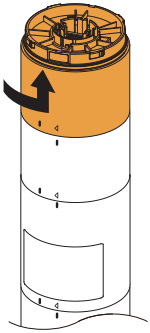

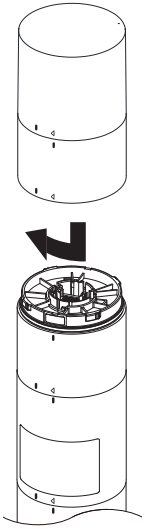

3 Align the positioning marks and insert the LED Unit that was removed in 1, and then turn the LED Unit clockwise to lock it in place.

■ Adding an LED Unit

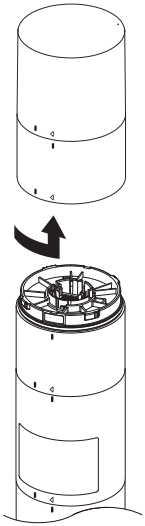

1 Remove the LED Unit above the area to attach an additional LED unit.

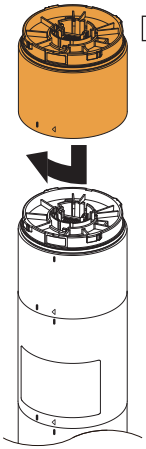

2 Align the positioning marks and insert the LED Unit, and then turn the LED Unit clockwise to lock it in place.

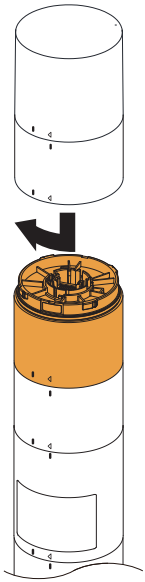

3 Align the positioning marks and insert the LED Unit that was removed in 1, and then turn the LED Unit clockwise to lock it in place.

■ Changing the Position of an LED Unit

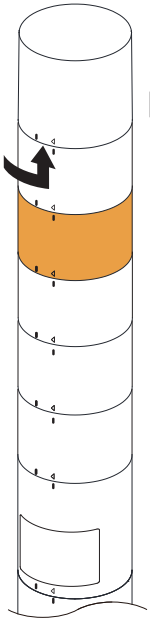

1 Remove the LED Unit right above the LED Unit that will change position.

2 Remove the LED Unit that will change position.

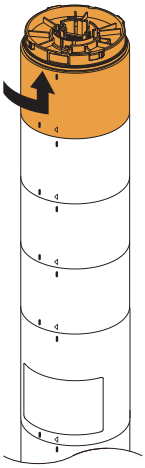

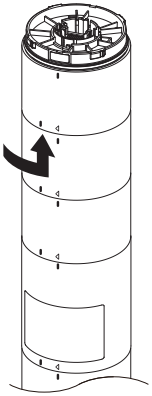

3 Remove the LED Unit right above the position to add the LED unit.

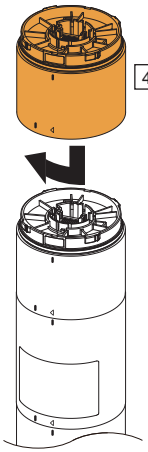

4 Attach the LED Unit that was removed in 2.

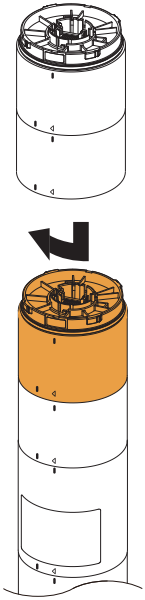

5 Attach the LED Unit that was removed in 3.

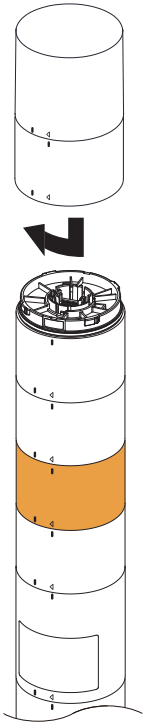

6 Attach the LED Unit that was removed in 1.

<Troubleshooting the LED Unit Attachment>

The LED Unit has the structure below.

State	Structure
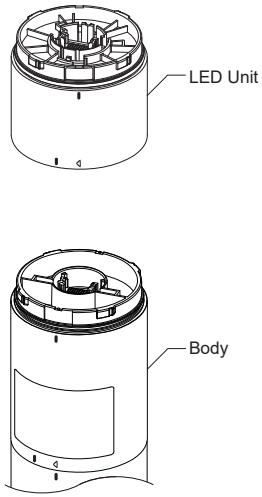	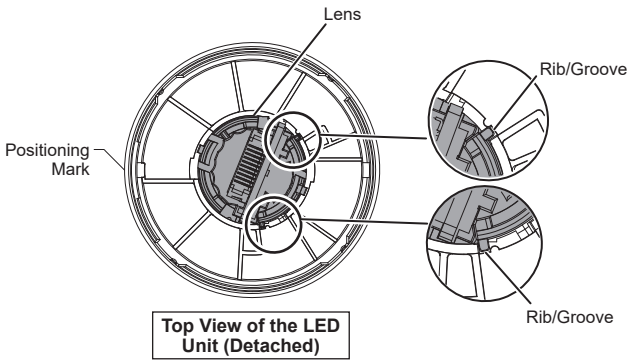 The rib of the lens generally fits into the groove when the LED Unit has been removed from the product.
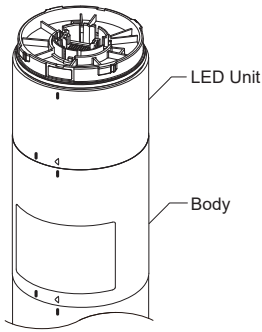	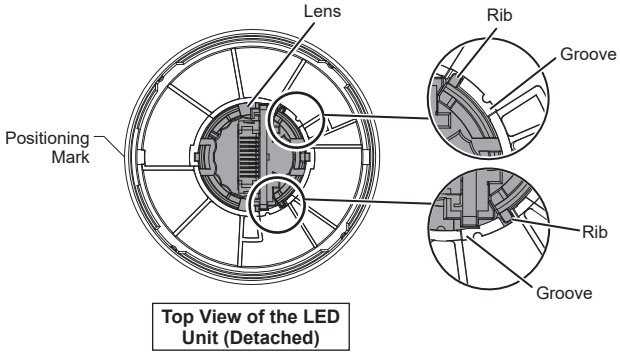 The rib of the lens generally does not sit in the groove while the LED Unit is attached to the product.

⚠Caution

Check whether the rib of the lens inside of the LED Unit fits into the groove if the LED Unit does not attach properly. Attach the LED Unit by referring to the next page if the rib does not fit into the groove as shown in the diagram below.
In addition, the rib may slide out of the groove during removal as shown in the diagram below depending on how the LED Unit is removed.
Attaching the LED Unit to the product again in this state may result in damage.

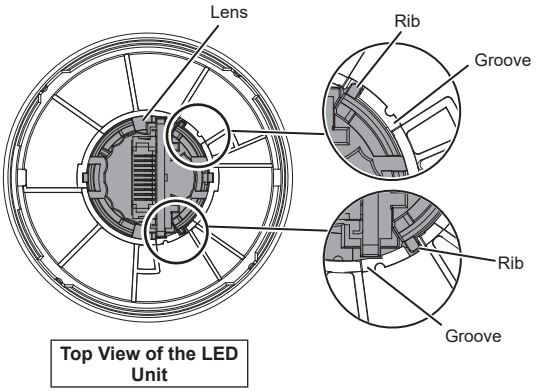

Do not remove the LED unit as shown in below.
The rib of the lens will slide out of the groove.
Attaching the LED Unit to the product again in this state may result in damage.

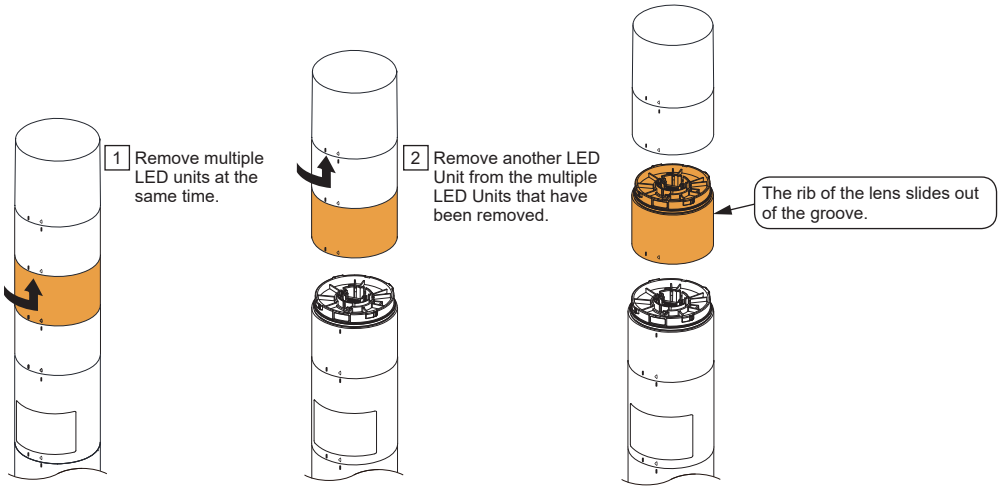

Use the procedure below if the LED Unit does not attach properly.

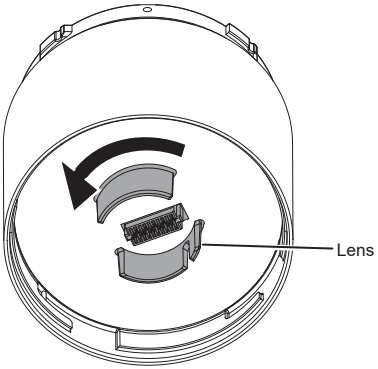

Turn the lens inside the LED Unit in the counterclockwise direction.
Turn until the lens snaps in place, and then attach the LED Unit to the product.

Bottom View of the LED Unit

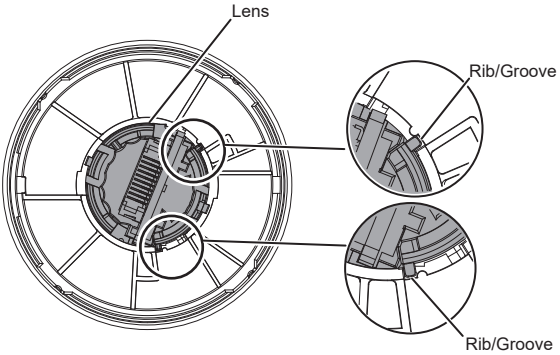

Top View of the LED Unit (Attachable State)

9 Troubleshooting

Troubleshoot problems that occur by following the instructions in the table below.

No.	Problem	Confirmation	Remedy
1	**The LED does not light.**	Have the wiring been connected properly?	Wire the LED again while referring to the instructions in “5 Wiring” (p. 6).
		Does the power source apply the proper voltage?	Check whether the IO-Link that is connected is outputting voltage.
2	**The color of the LED differs from the desired color.**	Is the process data correct?	Send the process data while referring to the instructions in “6 How to Use” (p. 7-8).
		Is a custom independent color control unit being used?	Send process data compatible with the color selected in the control instead of the light color for the independent color control unit.
3	**The LED does not flash.**	Is the process data correct?	Send the process data while referring to the instructions in “6 How to Use” (p. 7-8).
		Are the parameters correct?	Specify the parameters while referring to the instructions in “6 How to Use” (p. 7-8).
4	**The sound of the buzzer is low.**	Are the volume settings of the buzzer set too low?	Adjust the volume while referring to the instructions in “7 Setting the Buzzer” (p. 9).
5	**The buzzer does not sound.**	Is the process data correct?	Send the process data while referring to the instructions in “6 How to Use” (p. 7-8).
		Is the Buzzer Unit attached?	The Buzzer Unit is an optional part. Check “12 Optional Parts” (p. 27), and then attach the Buzzer Unit to the product by referring to “8 Unit Detachment Method” (p. 10-21).

Check the “Information for Inquiries,” and then contact the nearest PATLITE Sales Representative if you cannot resolve the problem even after the above troubleshooting.

Information for Inquiries			
Product Name	IO-Link Signal Tower	Date of Purchase	/ /
Model	(→ 2 Model Number Configuration [p. 2])	Problem	Please provide as much detail as possible.

10 Specifications

General Specifications

Model		LR6-3ILWMNW-RYG
Rated Voltage		24 V DC
Voltage tolerance range		18 V DC to 30 V DC
Rated current consumption	Standard	170 mA
	Maximum	200 mA
Rated power consumption	Standard	4 W
	Maximum	5 W
Inrush current		10 A / 0.3 msec
Ambient operating temperature		-20 °C to +50 °C
Ambient operating humidity		90 % RH or less; make sure to eliminate condensation
Ambient storage temperature		-30 °C to +60 °C
Ambient storage humidity		90 % RH or less; make sure to eliminate condensation
Installation area		Indoor
Installation direction		Positive direction
Protection level		IP65, NEMA TYPE 4X, 13
	Environmental conditions	When installed in the positive direction
Insulation resistance		5 Mohm or more at 500 V DC between charging parts and non-charging metal parts
Withstanding voltage		1 minute at 500 V AC between charging parts and non-charging metal parts
Weight (Tolerance: ±10 %)		0.38 kg
Exterior dimensions		See “3 Names and Dimensions of Each Part”
Compliance standards		UL 508, CSA-C22.2 No. 14, EMC Directive (EN 61000-6-4, EN 61000-6-2) RoHS Directive (EN 50581), FCC Part15 SubpartB Class A KC (KN 61000-6-4, KN 61000-6-2)
Notes		The brightness of each LED may differ according to the characteristics of the LED or color variations in each individual LED or the product.
Function		LED control/Buzzer control Settings to switch the operational mode/pattern settings for the LED flashing/intermittent settings for the buzzer
Communication Specification	IO-Link revision	1.1
	Transmission speed	COM2 (38.4 kbps)
	Minimum cycle time	8 ms
	Process data length	6 byte / 0 byte (input from master / output to master)
Vendor ID		763
Device ID		80001

The requirements in each law and regulation are only included in the language designated by each law and regulation. Check the instruction manuals published in each language.

Model		LR6-ILWMNW	LR6-ILWCNW
Rated Voltage		24 V DC	
Voltage tolerance range		18 V DC to 30 V DC	
Rated current consumption	Standard	170 mA	
	Maximum	200 mA	
Rated power consumption	Standard	4 W	
	Maximum	5 W	
Inrush current		10 A / 0.3 msec	
Ambient operating temperature		-20 °C to +50 °C	
Ambient operating humidity		90 % RH or less; make sure to eliminate condensation	
Ambient storage temperature		-30 °C to +60 °C	
Ambient storage humidity		90 % RH or less; make sure to eliminate condensation	
Installation area		Indoor	
Installation direction		Positive direction	
Protection level		IP65, NEMA TYPE 4X, 13	
	Environmental conditions	When installed in the positive direction	
Insulation resistance		5 Mohm or more at 500 V DC between charging parts and non-charging metal parts	
Withstanding voltage		1 minute at 500 V AC between charging parts and non-charging metal parts	
Weight (Tolerance: ±10 %)		0.2 kg	0.16 kg
Exterior dimensions		See "3 Names and Dimensions of Each Part"	
Compliance standards		UL 508, CSA-C22.2 No. 14, EMC Directive (EN 61000-6-4, EN 61000-6-2) RoHS Directive (EN 50581), FCC Part15 SubpartB Class A KC (KN 61000-6-4, KN 61000-6-2)	
Function		LED control/Buzzer control Settings to switch the operational mode/pattern settings for the LED flashing/intermittent settings for the buzzer	
Communication Specification	IO-Link revision	1.1	
	Transmission speed	COM2 (38.4 kbps)	
	Minimum cycle time	8 ms	
	Process data length	6 byte / 0 byte (input from master / output to master)	
Vendor ID		763	
Device ID		80001	

The requirements in each law and regulation are only included in the language designated by each law and regulation.
Check the instruction manuals published in each language.

11 Service Parts

These are the various parts for the customer to use when repairing or replacing parts of the product.

O-ring 60	Head Cover 60 [W/A]	Pole Bracket 60 [W/A]	Shading Sheet 60
 5 pcs.	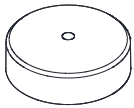	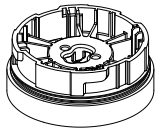 Accessories: O-ring 60 1 pc. Binding-head Tapping Screws 2 pcs. Pole Water-resistant Ring 1 pc.	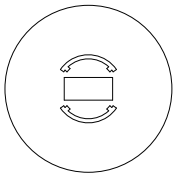 5 pcs.

12 Optional Parts

The optional parts for this product are listed below. (Top line: Part Name; Bottom: Model)

LED Unit
LR6-E

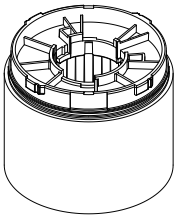

Model Number Configuration

	Model						LED Unit Color	Globe Color
Model Number	LR	6	-	E	-		↓	↓

* LR6 - Z

- R : Red
- Y : Amber
- G : Green
- B : Blue
- C : White
- M : Multicolor*

- (None) : Colored Globe
- Z : Clear Globe

External Diagram

(Unit: mm)

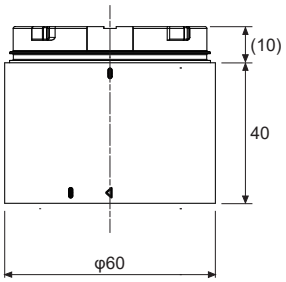

General Specifications

Model	LR6-E-□□
Ambient operating temperature	-20 °C to +50 °C
Ambient operating humidity	90 % RH or less; make sure to eliminate condensation
Weight (Tolerance: ±10 %)	0.060 kg
Compliance standards	UL508, CSA-C22.2 No. 14 EMC Directive (EN 61000-6-4, EN 61000-6-2) RoHS Directive (EN 50581)
Notes	The brightness of each LED may differ according to the characteristics of the LED or color variations in each individual LED or the product.

Buzzer Unit
LR6-BW

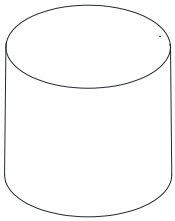

Model Number Configuration

	Model				Body Color (Material)
Model Number	LR	6	-	B	W

W Off-white (PC)

External Diagram

(Unit: mm)

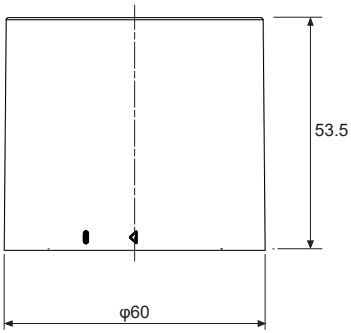

General Specifications

Model		LR6-BW	
Ambient operating temperature		-20 °C to +50 °C	
Ambient operating humidity		90 % RH or less; make sure to eliminate condensation	
Weight (Tolerance: ±10 %)		0.060 kg	
Buzzer sound/ frequency typ.	No. 1	Intermittent tone / 3378 Hz	
	No. 2	Continuous tone / 3378 Hz	
	No. 3	High-low tone / 2016 Hz & 3012 Hz	
	No. 4	Sweep sound / 1000 Hz - 4032 Hz	
Sound pressure level		Typ. 84 dB	Noise reduction approx. -10 dB Toggle with DIP switch See "7 Setting the Buzzer"
	Environmental conditions	Buzzer sound: No. 4 Sweep sound Total circumference from surface/at 1 m	
Compliance standards		UL508, CSA-C22.2 No. 14 EMC Directive (EN 61000-6-4, EN 61000-6-2) RoHS Directive (EN 50581) FCC Part15 SubpartB Class A	

Wireless Data Communication System Transmitter

WDT-6LR-Z2

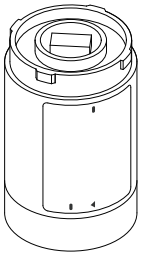

Model Number Configuration

	Model		Compatible Product		
Model Number	**WDT**	**-**	**6LR**	**-**	**Z2**

6LR LR Model Single Tower Size: Φ60

External Diagram

(Unit: mm)

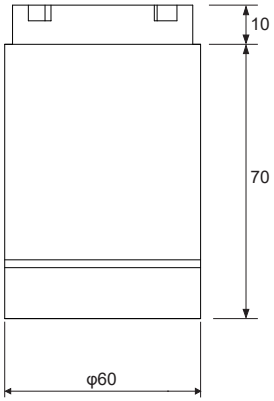

General Specifications

Model	WDT-6LR-Z2
Ambient operating temperature	-20 °C to +50 °C
Ambient operating humidity	85 % RH or less; make sure to eliminate condensation
Weight (Tolerance: ±10 %)	0.085 kg
Communication standard	IEEE 802.15.4 (Wireless communication)
Communication frequency	2405 MHz to 2480 MHz (16 channels)
Communication distance	Estimated to be approx. 30 m (Reference value)
Compliance standards	UL508, CAN/CSA-C22.2 No.13-14 EMC Directive (EN 55032 , EN 55024), EN 60950-1 RoHS Directive (EN 50581) FCC Part15 SubpartB

The optional parts for attachment are listed in the following table:

Pole Bracket	Wall Mounting Bracket	Wall Mounting Bracket
SZP-004W	**SZK-001U**	**SZK-003W**
Mounting Bracket	**Mounting Bracket**	**Aluminum Pole**
SZ-010	**SZ-016A**	**POLE-[100/300/800]A21**

PATLITE Corporation G2I

PATLITE Corporation ※Head office	■https://www.patlite.com/
PATLITE (U.S.A.) Corporation	■https://www.patlite.com/
PATLITE Europe GmbH ※Germany	■https://www.patlite.eu/
PATLITE (SINGAPORE) PTE LTD	■https://www.patlite.com/
PATLITE (CHINA) Corporation	■https://www.patlite.cn/
PATLITE KOREA CO., LTD.	■https://www.patlite.co.kr/
PATLITE TAIWAN CO., LTD.	■https://www.patlite.tw/
PATLITE (THAILAND) CO., LTD.	■https://www.patlite.co.th/
PATLITE MEXICO S.A. de C.V.	■https://www.patlite.com.mx/