Acer Projector

H9500BD/E250D/HE-820J Series User's Guide

Copyright © 2011. Acer Incorporated.
All Rights Reserved.

Acer Projector H9500BD/E250D/HE-820J Series User's Guide
Original Issue: 07/2011

Changes may be made periodically to the information in this publication without obligation to notify any person of such revisions or changes. Such changes will be incorporated in new editions of this manual or supplementary documents and publications. This company makes no representations or warranties, either expressed or implied, with respect to the contents hereof and specifically disclaims the implied warranties of merchantability or fitness for a particular purpose.

Record the model number, serial number, purchase date and place of purchase information in the space provided below. The serial number and model number are recorded on the label affixed to your projector. All correspondence concerning your unit should include the serial number, model number and purchase information.

No part of this publication may be reproduced, stored in a retrieval system, or transmitted, in any form or by any means, electronically, mechanically, by photocopy, recording or otherwise, without the prior written permission of Acer Incorporated.

Acer Projector H9500BD/E250D/HE-820J Series

Model number: _____

Serial number: _____

Date of purchase: _____

Place of purchase: _____

Acer and the Acer logo are registered trademarks of Acer Incorporated. Other companies' product names or trademarks are used herein for identification purposes only and belong to their respective companies.

"HDMI™, the HDMI logo and High-Definition Multimedia Interface are trademarks or registered trademarks of HDMI Licensing LLC."

Information for your safety and comfort

Read these instructions carefully. Keep this document for future reference. Follow all warnings and instructions marked on the product.

Turning the product off before cleaning

Unplug this product from the wall outlet before cleaning. Do not use liquid cleaners or aerosol cleaners. Use a damp cloth for cleaning.

Caution for plug as disconnecting device

Observe the following guidelines when connecting and disconnecting power to the external power supply unit:

- Install the power supply unit before connecting the power cord to the AC power outlet.
- Unplug the power cord before removing the power supply unit from the projector.
- If the system has multiple sources of power, disconnect power from the system by unplugging all power cords from the power supplies.

Caution for Accessibility

Be sure that the power outlet you plug the power cord into is easily accessible and located as close to the equipment operator as possible. When you need to disconnect power to the equipment, be sure to unplug the power cord from the electrical outlet.

Warnings!

- Do not use this product near water.
- Do not place this product on an unstable cart, stand or table. If the product falls, it could be seriously damaged.
- Slots and openings are provided for ventilation to ensure reliable operation of the product and to protect it from overheating. These openings must not be blocked or covered. The openings should never be blocked by placing the product on a bed, sofa, rug or other similar surface.

This product should never be placed near or over a radiator or heat register, or in a built-in installation unless proper ventilation is provided.

- Never push objects of any kind into this product through cabinet slots as they may touch dangerous voltage points or short-out parts that could result in a fire or electric shock. Never spill liquid of any kind onto or into the product.

- To avoid damage of internal components and to prevent battery leakage, do not place the product on a vibrating surface.
- Never use it under sporting, exercising, or any vibrating environment which will probably cause unexpected short current or damage rotor devices, lamp.

Using electrical power

- This product should be operated from the type of power indicated on the marking label. If you are not sure of the type of power available, consult your dealer or local power company.
- Do not allow anything to rest on the power cord. Do not locate this product where people will walk on the cord.
- If an extension cord is used with this product, make sure that the total ampere rating of the equipment plugged into the extension cord does not exceed the extension cord ampere rating. Also, make sure that the total rating of all products plugged into the wall outlet does not exceed the fuse rating.
- Do not overload a power outlet, strip or receptacle by plugging in too many devices. The overall system load must not exceed 80% of the branch circuit rating. If power strips are used, the load should not exceed 80% of the power strip's input rating.
- This product's AC adapter is equipped with a three-wire grounded plug. The plug only fits in a grounded power outlet. Make sure the power outlet is properly grounded before inserting the AC adapter plug. Do not insert the plug into a non-grounded power outlet. Contact your electrician for details.

Warning! The grounding pin is a safety feature. Using a power outlet that is not properly grounded may result in electric shock and/or injury.

Note: The grounding pin also provides good protection from unexpected noise produced by other nearby electrical devices that may interfere with the performance of this product.

- Use the product only with the supplied power supply cord set. If you need to replace the power cord set, make sure that the new power cord meets the following requirements: detachable type, UL listed/CSA certified, VDE approved or its equivalent, 4.5 meters (15 feet) maximum length.

Product servicing

Do not attempt to service this product yourself, as opening or removing covers may expose you to dangerous voltage points or other risks. Refer all servicing to qualified service personnel.

Unplug this product from the wall outlet and refer servicing to qualified service personnel when:

- the power cord or plug is damaged, cut or frayed
- liquid was spilled into the product
- the product was exposed to rain or water
- the product has been dropped or the case has been damaged
- the product exhibits a distinct change in performance, indicating a need for service
- the product does not operate normally after following the operating instructions

Note: Adjust only those controls that are covered by the operating instructions, since improper adjustment of other controls may result in damage and will often require extensive work by a qualified technician to restore the product to normal condition.

Warning! For safety reasons, do not use non-compliant parts when adding or changing components. Consult your reseller for purchase options.

Your device and its enhancements may contain small parts. Keep them out of the reach of small children.

Additional safety information

- Do not look into the projector's lens when the lamp is on. The bright may hurt your eyes.
- Turn on the projector first and then signal sources
- Do not place the product in following environments:
  - Space that is poorly ventilated or confined. At least 50cm clearance from walls and free flow of air around the projector is necessary.
  - Locations where temperatures may become excessively high, such as inside of a car with all windows rolled up.
  - Locations where excessive humidity, dust, or cigarette smoke may contaminate optical components, shortening the life span and darkening the image.
  - Locations near fire alarms.
  - Locations with an ambient temperature above 40 °C/104 °F.
  - Locations where the altitudes are higher than 10000 feet.
- Unplug immediately if there is something wrong with your projector. Do not operate if smoke, strange noise or odor comes out of your projector. It

might cause fire or electric shock. In this case, unplug immediately and contact your dealer.

- Do not keep using this product to break or drop it. In this case contact your dealer for inspection.
- Do not face the projector lens to the sun. It can lead to fire.
- When switching the projector off, suggest to ensure the projector completes its cooling cycle before disconnecting power.
- Do not frequently turn off the main power abruptly or unplug the projector during operation. The best way is to wait for the fan to turn off before turning main power off.
- Do not touch air outlet grille and bottom plate which becomes hot.
- Clean the air filter frequently if have. The temperature inside may rise and cause damage when the filter/ventilation slots clogged with dirt or dust.
- Do not look into the air outlet grille when projector is operating. It may hurt your eyes.
- Always open the lens shutter or remove the lens cap when the projector is on.
- Do not block the projector lens with any object when the projector is under operation as this could cause the object to become heated and deformed or even cause a fire. To temporarily turn off the lamp, press **HIDE** on the remote control.
- The lamp becomes extremely hot during operation. Allow the projector to cool for approximately 45 minutes prior to removing the lamp assembly for replacement.
- Do not operate lamps beyond the rated lamp life. It could cause it to break on rare occasions.
- Never replace the lamp assembly or any electronic components unless the projector is unplugged.
- The product will detect the life of the lamp itself. Please be sure to change the lamp when is showing warning message.
- When changing the lamp, please allow unit to cool down, and follow all changing instructions.
- Reset the "Lamp Hour Reset" function from the Onscreen display "Management" menu after replacing the lamp module.
- Do not attempt to disassemble this projector. There are dangerous high voltages inside which may hurt you. The only user serviceable part is the lamp which has its own removable cover. Refer servicing only to suitable qualified professional service personnel.
- Do not stand the projector on end vertically. It may cause the projector to fall over, causing injury or damage.
- This product is capable of displaying inverted images for ceiling mount installation. Only use acer ceiling mount kit for mounting the projector and ensure it is securely installed.

Caution for Listening

To protect your hearing, follow these instructions.

- Increase the volume gradually until you can hear clearly and comfortably.
- Do not increase the volume level after your ears have adjusted.
- Do not listen to music at high volumes for extended periods.
- Do not increase the volume to block out noisy surroundings.
- Decrease the volume if you can't hear people speaking near you.

Disposal instructions

Do not throw this electronic device into the trash when discarding. To minimize pollution and ensure utmost protection of the global environment, please recycle. For more information on the Waste from Electrical and Electronics Equipment (WEEE) regulations, visit http://www.acer-group.com/public/Sustainability/sustainability01.htm

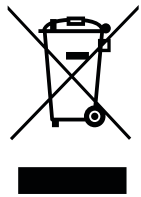

Mercury advisory

For projectors or electronic products containing an LCD/CRT monitor or display:

"Lamp(s) contain Mercury,
Dispose Properly."

Lamp(s) inside this product contain mercury and must be recycled or disposed of according to local, state or federal laws. For more information, contact the Electronic Industries Alliance at www.eiae.org. For lamp-specific disposal information, check www.lamprecycle.org

First things first

Usage Notes

Do:

- Turn off the product before cleaning.
- Use a soft cloth moistened with mild detergent to clean the display housing.
- Disconnect the power plug from AC outlet if the product is not being used for a long period of time.

Don't:

- Block the slots and openings on the unit provided for ventilation.
- Use abrasive cleaners, waxes or solvents to clean the unit.
- Use under the following conditions:
  - In extremely hot, cold or humid environments.
  - In areas susceptible to excessive dust and dirt.
  - Near any appliance that generates a strong magnetic field.
  - Place In direct sunlight.

Precautions

Follow all warnings, precautions and maintenance as recommended in this user's guide to maximize the life of your unit.

Warning:

- Do not look into the projector's lens when the lamp is on. The bright light may hurt your eyes.
- To reduce the risk of fire or electric shock, do not expose this product to rain or moisture.
- Please do not open or disassemble the product as this may cause electric shock.
- When changing the lamp, please allow unit to cool down, and follow all changing instructions.
- This product will detect the life of the lamp itself. Please be sure to change the lamp when it shows warning messages.
- Reset the "Lamp Hour Reset" function from the Onscreen display "Management" menu after replacing the lamp module.
- When switching the projector off, please ensure the projector completes its cooling cycle before disconnecting power.
- Turn on the projector first and then the signal sources.
- Do not use lens cap when projector is in operation.
- When the lamp reaches the end of its life, it will burn out and may make a loud popping sound. If this happens, the projector will not turn back on until the lamp module has been replaced. To replace the lamp, follow the procedures listed under "Replacing the Lamp".

Contents

Information for your safety and comfort iii

First things first viii

Usage Notes viii

Precautions viii

Introduction 1

Product Features 1

Package Overview 2

Projector Overview 3

Projector Outlook 3

Control Panel 5

Remote Control Layout 6

Getting Started 8

Connecting the Projector 8

Turning the Projector On/Off 9

Turning on the Projector 9

Turning the projector off 10

Adjusting the Projected Image 11

Adjusting the Height of Projected Image 11

How to optimize image size and distance 12

How to get a preferred image size by adjusting distance and zoom 14

How to get a preferred image position by adjusting lens shift 16

User Controls 19

Installation menu 19

Acer Empowering Technology 20

Onscreen Display (OSD) Menus 21

Color 22

Image 24

Management 27

Setting 28

Timer 30

Language 30

Appendices 31
Troubleshooting 31
LED & Alarm Definition Listing 35
Replacing and cleaning the dust filters 36
Replacing the Lamp 37
Ceiling Mount Installation 38
Specifications 41
Compatibility modes 43
Regulations and safety notices 48

Introduction

Product Features

This product is a single-chip DLP® projector. Outstanding features include:

- DLP® technology
- Native 1920 x 1080 1080p resolution
  4:3 / 16:9 / L.Box aspect ratio supported
- Enables projecting 3D content via DLP Link Technology: Blue-Ray 3D supported and Nvidia 3DTV Play Ready
- Enrichs 3D experience for 2D contents via 2D to 3D convert function
- Acer ColorBoost technology delivers nature's true colors for vivid, life-like images
- Acer ColorSafe II technology ensures consistent color rendition over time.
- High brightness and contrast ratio
- Versatile display modes (Bright, Presentation, Standard, Movie, Dark Cinema, Game, Sports, User) enable optimum performance in any situation
- NTSC / PAL / SECAM compatible and HDTV (720p, 1080i, 1080p) supported
- Acer AcuMotion provides a smoother image when viewing video content.
- Side-sliding lamp design allows easy lamp replacement
- Lower power consumption and economy (ECO) mode extends lamp life
- Acer EcoProjeciton Technology delivers Intelligent power management approach and physical efficiency improvement
- Empowering Key reveals Acer Empowering Technology utilities (Acer eView, eTimer, ePower Management) for easy adjustment of settings
- Equipped with HDMI™ connection supporting HDCP
- Advanced digital keystone correction optimizes presentations
- Smart detection delivers quick, intelligent source detection.
- Manual focus projection lens zooms up to 1.5x
- 8x digital zoom and pan move function
- Microsoft® Windows® 2000, XP, Vista®, Windows® 7, OS compliant
- Manual lens shift adjustment

Package Overview

This projector comes with all the items shown below. Check to make sure your unit is complete. Contact your dealer immediately if any thing is missing.

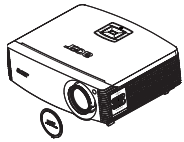

Projector with lens cap

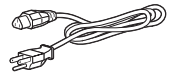

Power cord

VGA cable

HDMI cable

Composite video cable

Security card

User's guide

Remote control

Quick start guide

2 x Battery

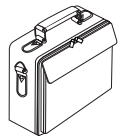

Carrying case

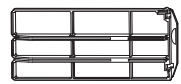

Dust filter

3D glasses

Projector Overview

Projector Outlook

Front / upper side

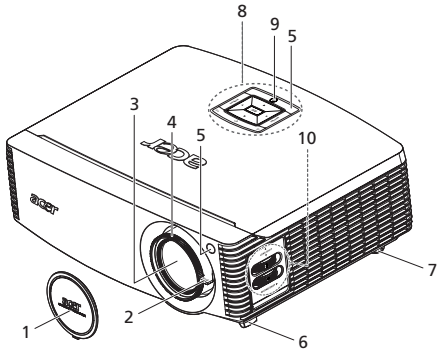

#	Description	#	Description
1	Lens cap	6	Elevator feet
2	Zoom lever	7	Tilt adjusting wheels
3	Zoom Lens	8	Control panel
4	Focus ring	9	Power button
5	Remote control receivers	10	Lens shift control rings

Rear side

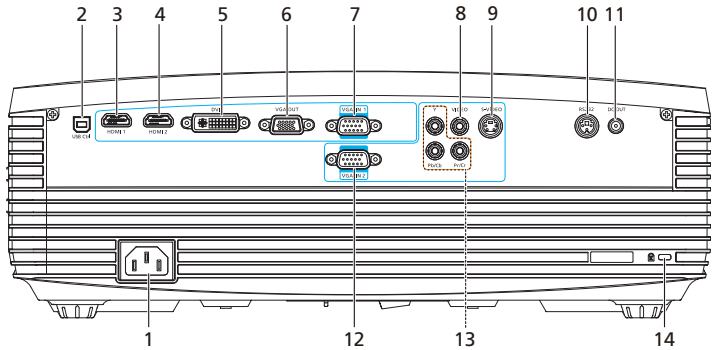

#	Description	#	Description
1	Power socket	8	Composite video input connector
2	USB ctrl connector	9	S-Video input connector
3	HDMI 1 connector	10	RS232 connector
4	HDMI 2 connector	11	12V DC output connector
5	DVI input connector (for digital signal with HDCP function)	12	PC analog input connector (VGA IN 2)
6	Monitor loop-through output connector (VGA-Out)	13	YPbPr/YCbCr input connector
7	PC analog signal/HDTV/component video input connector (VGA IN 1)	14	Kensington™ lock port

Control Panel

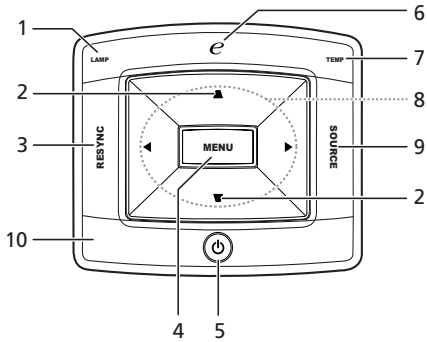

#	Function	Description
1	LAMP	Lamp Indicator LED
2	KEYSTONE	Adjusts the image to compensate for distortion caused by tilting the projector.
3	RESYNC	Automatically synchronizes the projector to the input source.
4	MENU	• Press "**MENU**" to launch the Onscreen display (OSD) menu, back to the previous step for the OSD menu operation or exit the OSD menu. • Confirm your selection of items.
5	POWER	See the contents in "**Turning the Projector On/ Off**" section.
6	Empowering key	Unique Acer functions: eView, eTimer, ePower Management.
7	TEMP	Temp Indicator LED
8	Four directional select keys	Use to ▲ ▼ ◀ ▶ select items or make adjustments to your selection.
9	SOURCE	Press "**SOURCE**" to choose RGB, Component, S-Video, Composite, SCART, HDTV and HDMI™ sources.
10	IR Recevier	Remote control receiver.

Remote Control Layout

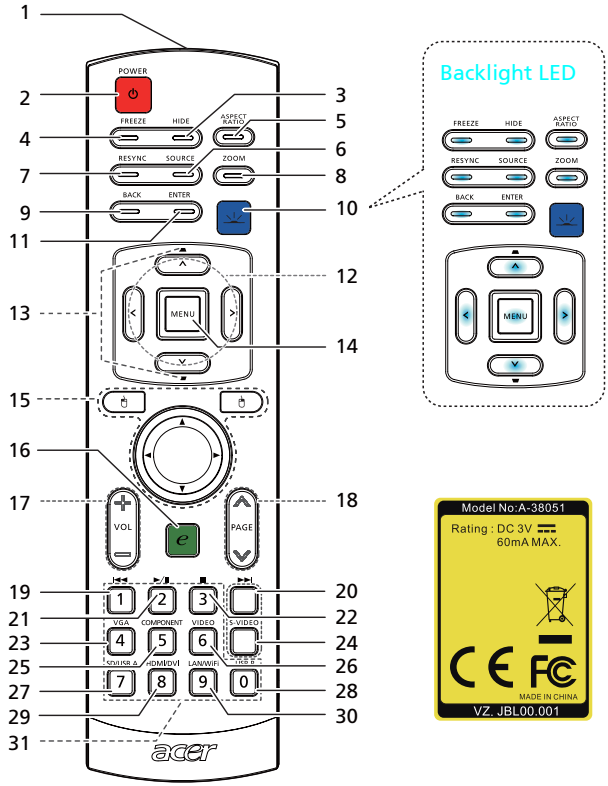

#	Icon	Function	Description
1		Infrared transmitter	Sends signals to the projector.
2		POWER	Refer to the "**Turning the Projector On/Off**" section.
3		HIDE	Momentarily turns off the video. Press **"HIDE"** to hide the image, press again to display the image.
4		FREEZE	To pause the screen image.
5		ASPECT RATIO	To choose the desired aspect ratio (Auto/4:3/16:9/L.Box)
6		SOURCE	Press "**SOURCE**" to choose from RGB, Component, S-Video, Composite, SCART, HDTV and HDMI™ sources.
7		RESYNC	Automatically synchronizes the projector to the input source.
8		ZOOM	Zooms the projector display in or out.
9		Back	Press "**BACK**" to go back one menu step.

#	Icon	Function	Description
10		Backlight	Press "" to trigger backlight mode • Continue to light 3 sec then disappear if no action. • Continue to light if action and keep 3 sec finally.
11		Enter	Press "**ENTER**" to play media file.
12	^ < > v	Four directional select keys	Use up, down, left, right buttons to select items or make adjustments to your selection.
13	-	KEYSTONE	Adjusts the image to compensate for distortion caused by tilting the projector (± 15 degrees).
14		MENU	• Press "**MENU**" to launch the Onscreen display (OSD) menu, back to the previous step for the OSD menu operation or exit the OSD menu. • Confirm your selection of items.
15		MOUSE Left/ Right Click	No function.
16		Empowering key	Unique Acer functions: eView, eTimer, ePower Management.
17		VOLUME	No function.
18	Page Up Page Down	PAGE	No function.
19	⏮	Prev	No function.
20	⏭	Next	No function.
21	▶/⏸	Play/Pause	No function.
22	■	Stop	No function.
23		VGA	Press "**VGA**" to change source to the VGA connector. This connector supports analog RGB, YPbPr (480p/576p/720p/ 1080i), YCbCr (480i/576i) and RGBsync.
24		S-VIDEO	To change source to S-Video.
25		COMPONENT	Press "**COMPONENT**" to change source to Component video. This connection supports YPbPr (480p/576p/720p/ 1080i) and YCbCr (480i/576i).
26		VIDEO	To change source to COMPOSITE VIDEO.
27		SD/USB A	No function.
28		USB B	No function.
29		HDMI™/DVI	Press "**HDMI™/DVI**" to change source to HDMI™/DVI.
30		LAN/WiFi	No function.
31		KeyPad 0~9	Press "**0~9**" to input a password in the "**Security**".

Getting Started

Connecting the Projector

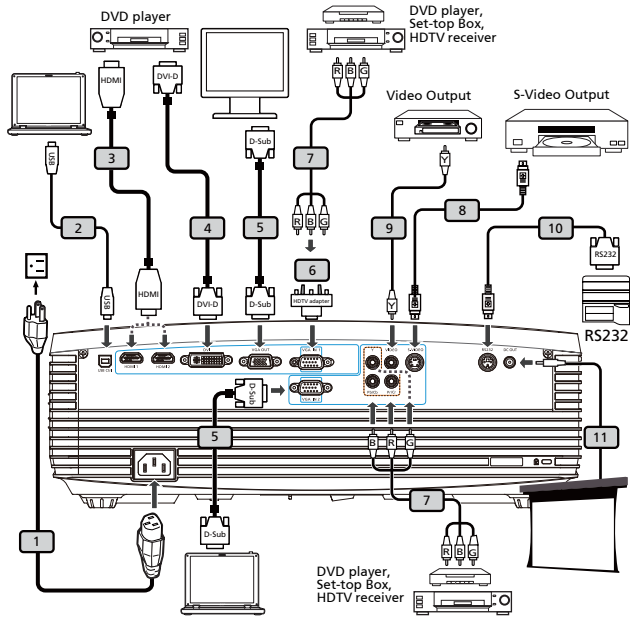

#	Description	#	Description
1	Power cord	7	3 RCA component cable
2	USB cable	8	S-video cable
3	HDMI cable	9	Composite video cable
4	DVI cable	10	RS232 cable
5	VGA cable	11	12V DC cable
6	VGA to component/HDTV adapter		

Note: To ensure the projector works well with your computer, please make sure the timing of the display mode is compatible with the projector.

Turning the Projector On/Off

Turning on the Projector

1 Remove the lens cap.(Illustration #1)

2 Ensure that the power cord and signal cable are securely connected. The Power indicator LED will flash red.

3 Turn on the projector by pressing "**Power**" button on the control panel, and the Power indicator LED will turn blue.(Illustration #2)

4 Turn on your source (computer, notebook, video player ,etc.). The projector will detect your source automatically.

- If the screen displays "Lock" and "Source" icons, it means the projector is locked onto a specific source type and there is no such type of input signal detected.
- If the screen displays "No Signal", please make sure the signal cables are securely connected.
- If you connect to multiple sources at the same time, use the "Source" button on either control panel or the remote control or direct source key on the remote control to switch between inputs.

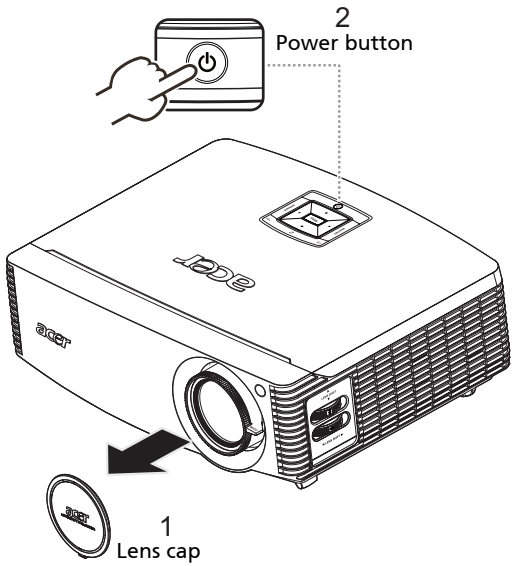

Turning the projector off

1 To turn the projector off, press the power button. This message appears: **"Please press the power button again to complete the shutdown process."** Press the power button again.

2 The LED power indicator will turn RED and blink rapidly after the projector is turned off, and the fan(s) will continue to operate for about 2 minutes to ensure that the system cools properly.

3 As long as the power cord remains plugged in, you can press the power button to turn the projector immediately back on anytime during the 2-minute shutdown process.

4 Once the system has finished cooling, the LED power indicator will stop blinking and turn solid red to indicate standby mode.

5 It is now safe to unplug the power cord.

Warning indicators:

- **"Projector Overheated. Lamp will automatically turn off soon."**
  This onscreen message indicates that the projector has overheated. The lamp with automatically turn off, the projector will automatically shut down, and the LED temp indicator will turn solid red. Contact your local dealer or service center.
- **"Fan failed. Lamp will automatically turn off soon."**
  This onscreen message indicates that the fan has failed. The lamp will automatically turn off, the projector will automatically shut down, and the LED temp indicator will blink. Contact your local dealer or service center.

Note: Whenever the projector automatically shuts down and the LED lamp indicator turns solid red, contact your local reseller or service center.

Adjusting the Projected Image

Adjusting the Height of Projected Image

The projector is equipped with elevator feet for adjusting the height of image.

To raise/lower the image:

1 Raise the image to the desired height angle (Illustration #1), then pull out the stand feet into position.

2 Use Tilt adjusting wheel (Illustration #2) to fine-tune the display angle.

3 Use Lens shift control rings to move the image to the ideal position. (refer to page 16)

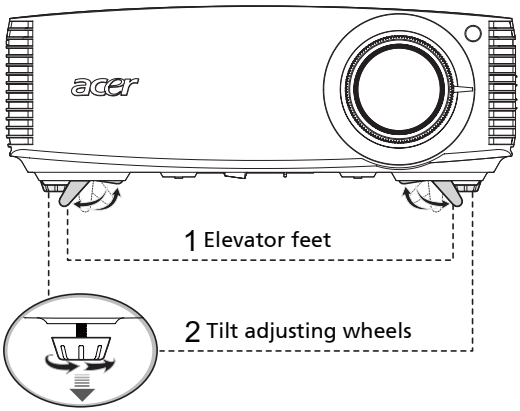

How to optimize image size and distance

Consult the table below to find the optimal image sizes achievable when the projector is positioned at a desired distance from the screen. Example: If the projector is 3 m from the screen, good image quality is possible for image sizes between 59" and 91".

Note: Remind as below figure, the space of 147 cm height is required when located at 3m distance.

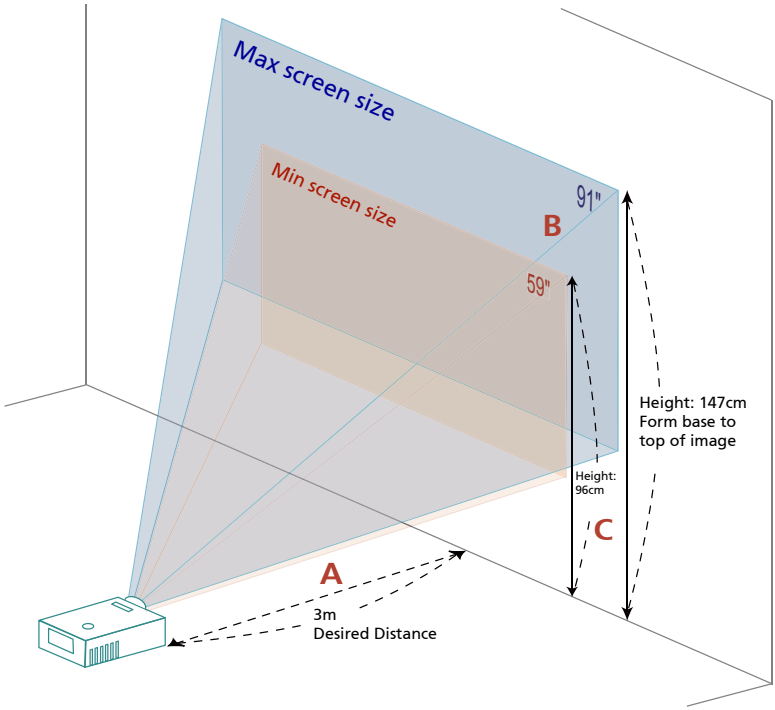

Figure: Fixed distance with different zoom and screen size.

Desired Distance (m) <A>	Screen size		Top	Screen size		Top
	(Min zoom)			(Max zoom)		
	Diagonal (inch) <B>	W (cm) x H (cm)	From base to top of image (cm) <C>	Diagonal (inch) <B>	W (cm) x H (cm)	From base to top of image (cm) <C>
1.5	30	66 x 37	48	45	100 x 56	73
2	40	88 x 49	64	60	134 x 75	98
2.5	50	110 x 62	80	76	167 x 94	122
3	59	132 x 74	96	91	201 x 113	147
3.5	69	154 x 86	112	106	234 x 132	171
4	79	176 x 99	128	121	268 x 151	196
4.5	89	197 x 111	144	136	301 x 169	220
5	99	219 x 123	160	151	335 x 188	245
6	119	263 x 148	193	181	402 x 226	294
7	139	307 x 173	225	212	469 x 264	343
8	159	351 x 197	257	242	535 x 301	392
9	178	395 x 222	289	272	602 x 339	441
10	198	439 x 247	321	302	669 x 377	489
11	218	483 x 272	353	333	736 x 414	538
12	238	527 x 296	385	363	803 x 452	587

Zoom Ratio: 1.5x

How to get a preferred image size by adjusting distance and zoom

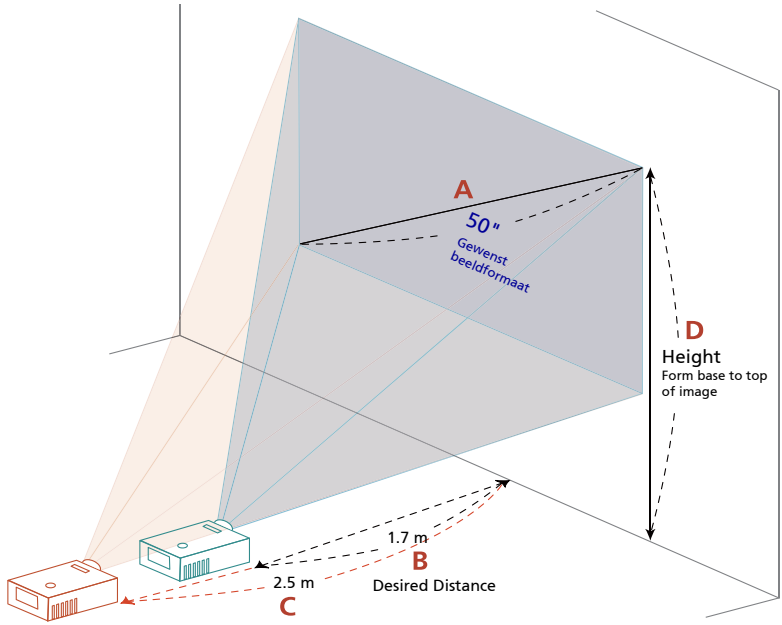

The table below shows how to achieve a desired image size by adjusting either the position or the zoom ring. For example: to obtain an image size of 50" set the projector at a distance 1.7 m and 2.5 m from the screen and adjust the zoom level accordingly.

Screen size		Distance (m)		Top (cm)
Diagonal (inch) <A>	W (cm) x H (cm)	Max zoom <B>	Min zoom <C>	From base to top of image <D>
30	66 X 37	1.0	1.5	49
40	89 X 50	1.3	2.0	65
50	111 X 62	1.7	2.5	81
60	133 X 75	2.0	3.0	97
70	155 X 87	2.3	3.5	113
80	177 X 100	2.6	4.0	130
90	199 X 112	3.0	4.5	146
100	221 X 125	3.3	5.0	162
120	266 X 149	4.0	6.1	194
150	332 X 187	5.0	7.6	243
180	398 X 224	6.0	9.1	291
200	443 X 249	6.6	10.1	324
250	553 X 311	8.3	12.6	405
300	664 X 374	9.9		486

Zoom Ratio: 1.5x

How to get a preferred image position by adjusting lens shift

The projector is equipped with lens shift for adjusting the position of projected image right and left or up and down without requiring you to physically move the projector.

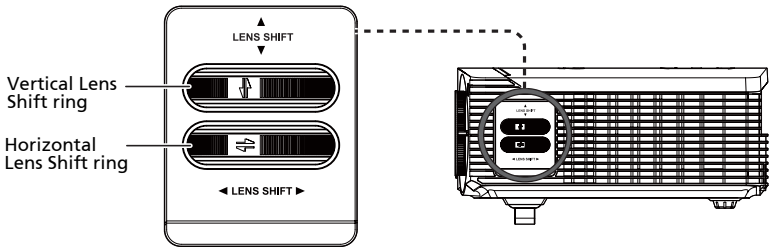

Note: The figures shown in this section are for reference only not approximate value. The figures between units can be different due to assembly tolerance.

Adjusting the horizontal or vertical image position

The vertical image height can be adjusted between 5% and 30% of the image height. (The minimum vertical image offset is fixed at 5% of the image height above the centre of the projector lens.)
With the lens in the centre position the horizontal image position can be adjusted to the left or right by up to a maximum of 15% of the image width.

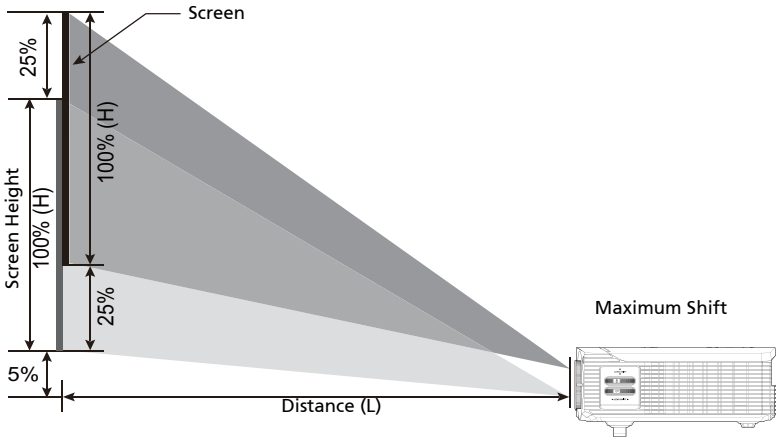

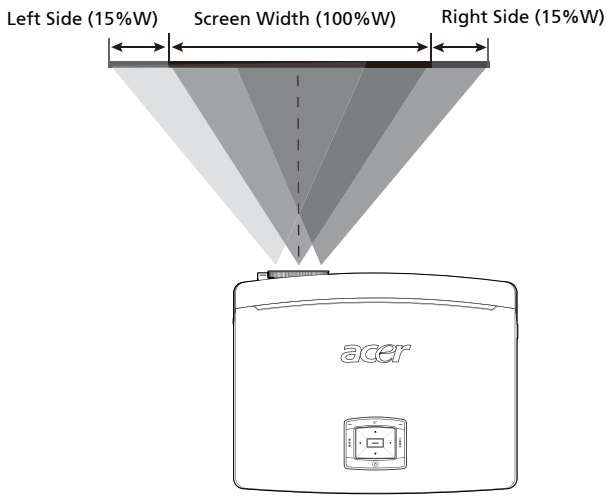

Note: The maximum shift of vertical (horizontal) image adjustment can be limited by horizontal (vertical) image position. Please refer below diagram.

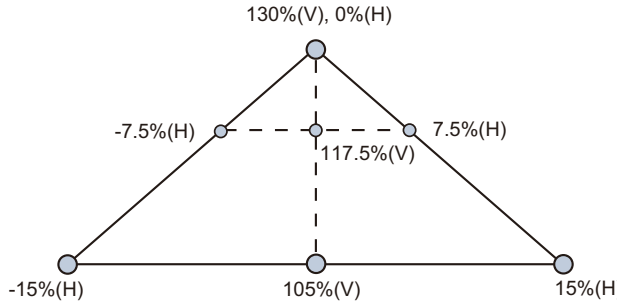

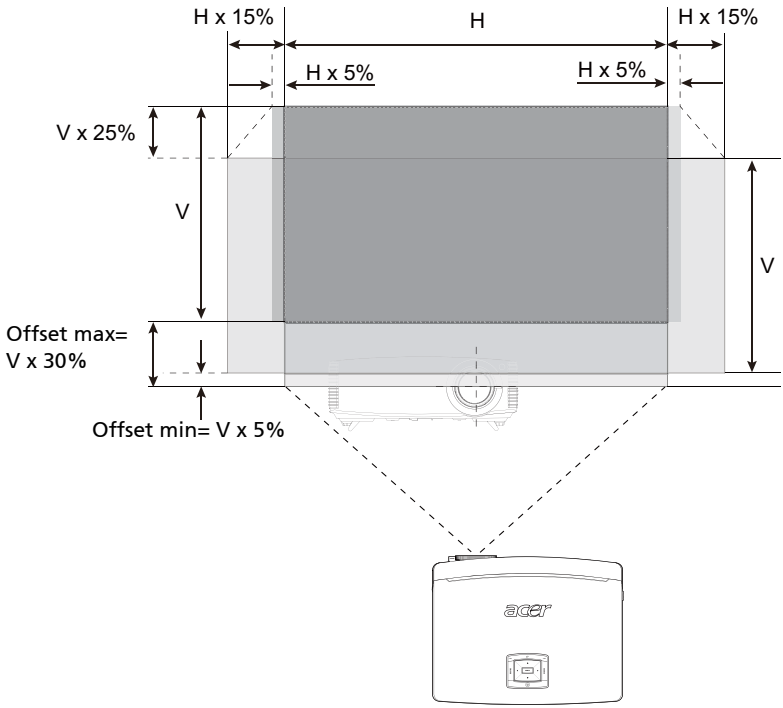

User Controls

Installation menu

The installation menu provides an onscreen display (OSD) for projector installation and maintenance. Use the OSD only when the message "No signal input" is displayed on the screen.

The menu options include settings and adjustments for screen size and distance, focus, keystone correction and more.

1 Turn on the projector by pressing "Power" button on the control pad.

2 Press the menu button on the control pad to launch the OSD for projector installation and maintenance.

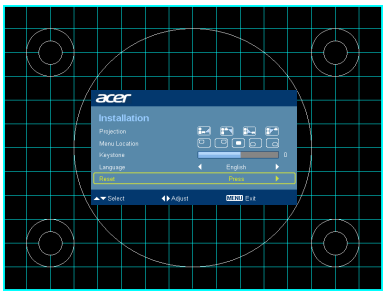

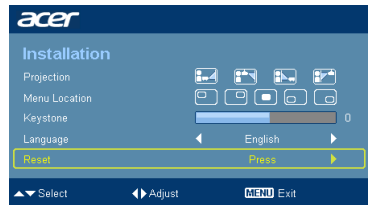

3 The background pattern acts as a guide to adjusting the calibration and alignment settings, such as screen size and distance, focus and more .

4 The Installation menu includes the following options:

- Projection method
- Menu location
- Keystone settings
- Language settings
- Reset to factory default function

Use the up and down arrow keys to select an option, the left and right arrow keys to adjust selected option settings, and the right arrow key to enter a submenu for feature setting. The new settings will be saved automatically upon exiting the menu.

5 Push the menu button anytime to exit the menu and return to the Acer welcome screen.

Acer Empowering Technology

Empowering Key 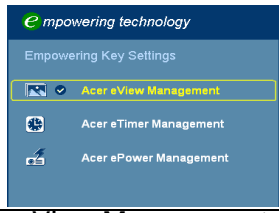	Acer Empowering Key provides four Acer unique functions, they are "Acer eView Management", "Acer eTimer Management" and "Acer ePower Management" respectively. Press "e" key for more than one second to launch the Onscreen display main menu to modify its function.
Acer eView Management 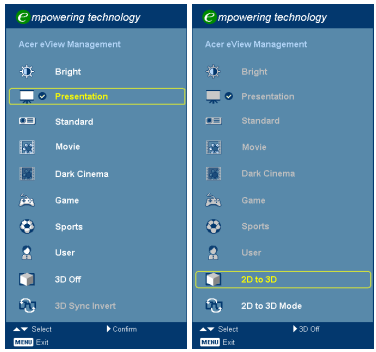	Press "e" to launch "Acer eView Management" submenu. "Acer eView Management" is for display mode selection. Please refer to Onscreen Display Menus section for more detail. The "3D", "3D Sync Invert" and "2D to 3D Mode" functions offer quick access of 3D functions here.
Acer eTimer Management 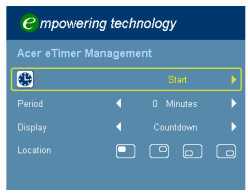	Press "e" to launch "Acer eTimer Management" submenu. "Acer eTimer Management" provides the reminding function for presentation time control. Please refer to Onscreen Display Menus section for more detail.
Acer ePower Management	Press "e" to launch "Acer ePower Management". "Acer ePower Management" provides user one shortcut to save lamp and projector life. Please refer to Onscreen Display section for more detail.

Onscreen Display (OSD) Menus

The projector has multilingual OSD that allow you to make image adjustments and change a variety of settings.

Using the OSD menus

- To open the OSD menu, press **"MENU"** on the remote control or control panel.
- When the OSD is displayed, use the ▲ ▼ keys to select any item in the main menu. After selecting the desired main menu item, press ▶ to enter submenu for feature setting.
- Use the ▲ ▼ keys to select the desired item and adjust the settings by using the ◀ ▶ keys.
- Select the next item to be adjusted in the submenu and adjust as described above.
- Press **"MENU"** on the remote control or control panel, the screen will return to the main menu.
- To exit OSD, press **"MENU"** on the remote control or control panel again. The OSD menu will close and the projector will automatically save the new settings.

Color

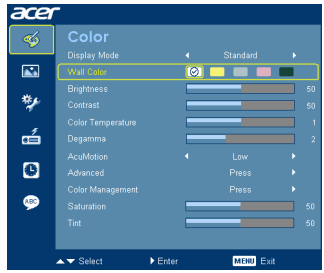

Display Mode	There are many factory presets optimized for various types of images. • Bright: For brightness optimization. • Presentation: For meeting presentation with higher brightness. • Standard: For common environment. • Movie: For brighter and general movie/video/photo playing. • Dark Cinema: For dark movie content. • Game: For game content. • Sports: For sport picture. • User: Memorize user's settings.
Wall Color	Use this function to choose a proper color according to the wall. There are several choices, including white, light yellow, light blue, pink, dark green. It will compensate the color deviation due to the wall color to show the correct image tone.
Brightness	Adjust the brightness of the image. • Press ◀ to darken image. • Press ▶ to lighten the image.
Contrast	"Contrast" controls the difference between the lightest and darkest parts of the picture. Adjusting the contrast changes the amount of black and white in the image. • Press ◀ to decrease the contrast. • Press ▶ to increase the contrast.
Color Temperature	Adjust the color temperature. At higher color temperatures, the screen looks colder; at lower color temperatures, the screen looks warmer.
Degamma	Effects the representation of dark scenery. With greater gamma value, dark scenery will look brighter.
AcuMotion	Activate AcuMotion to provide a smoother image when viewing video content.

Advanced 	Noise Reduction Adjusts signal noise reduction."0" means the noise reduction is off, ">0" increase noise reduction.
	Sharpeness Adjusts the sharpness of the image. • Press ◀ to decrease the sharpness. • Press ▶ to increase the sharpness.
	Brilliant Color Produces an expanded on-screen color spectrum that delivers enhanced color saturation for bright, true-to-life images. This feature is "On" by default.
	Dynamic Black This feature enables the projector to automatically optimize the display of dark movie scenes enabling them to be shown in incredible detail.
Color Management 	Color R Adjusts the red color.
	Color G Adjusts the green color.
	Color B Adjusts the blue color.
	Color C Adjusts the cyan color.
	Color M Adjusts the magenta color.
	Color Y Adjusts the yellow color.
	Skin Color Adjusts the skin color.
	HDMI Color Range Adjust the color range of the HDMI image data to correct color display error. • Auto: Automatically adjust by information from player. • Limited Range: Prosess the input image as limited color range data. • Full Range: Prosess the input image as full color range data.
Saturation	Adjusts a video image from black and white to fully saturated color. • Press ◀ to decrease the amount of color in the image. • Press ▶ to increase the amount of color in the image.
Tint	Adjusts the color balance of red and green. • Press ◀ to increase the amount of green in the image. • Press ▶ to increase the amount of red in the image.

Note: "Saturation", "Tint" and "Noise Reduction" functions are not supported under computer mode or HDMI mode.
Note: "HDMI Color Range" function is only supported under HDMI mode.

Note: AcuMotion may not work under some conditions: while 3D function is on and the the frame rate is not HDMI 1.4a 1080@24P frame packing and 3D HQFS timings.
Note: The setting "High" in Dynamic Black may cause brightness flickers while playing big brightness dynamic range video contents.

Image

Projection	Front-Desktop • The factory default setting.
	Front-Ceiling • When you select this function, the projector inverts the image for ceiling-mounted projection.
	Rear-Desktop • When you select this function, the projector reverses the image so you can project from behind a translucent screen.
	Rear-Ceiling • When you select this function, the projector reverses and inverts the image at same time. You can project from behind a translucent screen with ceiling mounted projection.
Aspect Ratio 4:3 16:9 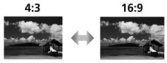	Use this function to choose your desired aspect ratio. • Auto: Keep the image with original width-higth ratio and maxi mize the image to fit native horizontal or vertical pixels. • 4:3: The image will be scaled to fit the screen and displayed using a 4:3 ratio. • 16:9: The image will be scaled to fit the width of the screen and the height adjusted to display the image using a 16:9 ratio. • L. Box: Keep original signal aspect ratio and zoom in by 1.333 times.
Keystone	Adjust image distortion caused by tilting projection. (±15 degrees)
H. Position (Horizontal position)	• Press ◀ to move the image left. • Press ▶ to move the image right.

V. Position (Vertical position)	• Press ◀ to move the image down. • Press ▶ to move the image up.
Frequency	"Frequency" changes the projector's refresh rate to match the frequency of your computer's graphics card. If you can see a vertical flickering bar in the projected image, use this function to make the necessary adjustments.
Tracking	Synchronizes the signal timing of the projector with the graphics card. If you experience an unstable or flickering image, use this function to correct it.
HDMI Scan Info	Adjust the overscan ratio of the HDMI image on screen. • Auto: Automatically adjust by information from player. • Underscan: Always no overscan on HDMI image. • Overscan: Always keep overscan on HDMI image.
2D to 3D 	2D to 3D Support most of the 2D contents. Choose "On" to enable 2D to 3D function supported by DLP 3D technology. Please use DLP 3D glasses to have correct performance.
	Mode Choose mode of "Photo", "Movie", "Jump-Out" and "User" as your prefered 3D setting.
	Convergence Choose convergrence effect of "Inward", "Middle" and "Outword" as your preferred 3D setting in "User" mode.
	Depth Choose depth effect of "Low", "Middle" and "Strong" as your prefered 3D setting in "User" mode.
3D	Choose "On" to enable DLP 3D function. • On: Choose this item while using DLP 3D glasses, quad buffer (NVIDIA/ATI...) graphic card and HQFS format file or DVD with corresponding SW player. • Off: Turn off 3D mode.
3D Format	Adjust the 3D format to display 3D content correctly.
3D Sync Invert	If you see a discrete or overlapping image while wearing DLP 3D glasses, you may need to execute "Invert" to get best match of left/ right image sequence to get the correct image (for DLP 3D).
3D Warning Message	Choose "Yes" to display the 3D warning message. Note: 3D display is now enabled. 1. Please make sure you have the correct 3D signals and glasses. 2. Remember to turn 3D off if you don't want to see 3D images. 3. If the 3D display isn't correct, please try to enable 3D Sync Invert. 4. Display mode options will be disabled while in 3D mode.

Note: "H. Position", "V. Position", "Frequency" and "Tracking" functions are not supported under HDMI, DVI or Video mode.
Note: "HDMI Scan Info" function is only supported under HDMI mode.
Note: "Depth" and "Convergence" are only supported under User mode.
Note: "3D Format" is not supported under Computer or Video mode.
Note: It needs correct settings on graphic card 3D application program for correct 3D display.

Note: The SW players, such as Stereoscopic Player and DDD TriDef Media Player can support 3D format files. You can download these three players on web page below,

- Stereoscopic Player (Trial): http://www.3dtv.at/Downloads/Index_en.aspx
- DDD TriDef Media Player (Trial): http://www.tridef.com/download/TriDef-3-D-Experience-4.0.2.html

Note: "3D Sync Invert" and "3D Foramt" are only available when 3D is enabled.

Note: There has reminder screen if 3D still enable when power on projector. Please adjust setting depended on your purpose.

Note: Simplified menu under specific 3D condition.

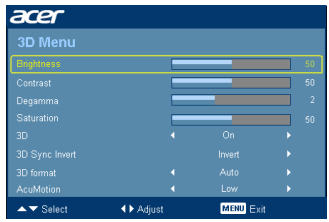

Note: It will takes much time and some garbage screen might happen while switching between 2D mode, 3D mode and 2D to 3D mode.

Note: The navigation speed will be slower while navigate in simplified 3D menu under specific 3D condition.

Management

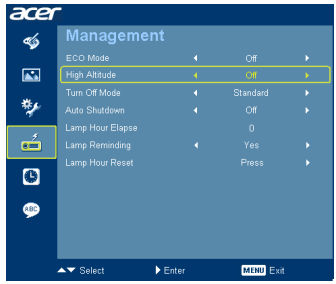

ECO Mode	Choose "On" to dim the projector lamp which will lower power consumption, extend the lamp life and reduce noise. Choose "Off" to return normal mode.
High Altitude	Choose "On" to turn on High Altitude mode. Operate the fans at full speed continuously to allow for proper high altitude cooling of the projector.
Turn Off Mode	• Standard: Properly shuts down the projector after fan cooling. • Instant Resume: Resumes the system when the Power button is pressed again within 2 minutes.
Auto Shutdown	The projector will automatically shutdown when there is no signal input after the allocated time. (in minutes)
Lamp Hour Elapse	Displays the lamp's elapsed operating time (in hours).
Lamp Reminding	Activate this function to display a reminder to change the lamp 30 hours before its expected end-of-life.
Lamp Hour Reset	Press the ▶ button and choose "Yes" to turn the lamp hour counter to 0 hours.

Setting

Menu Location	Choose the menu location on the display screen.
Closed Caption	Selects a preferred closed captioning mode from CC1, CC2, CC3, CC4, (CC1 displays captions in the primary language in your area). Select "Off" to turn off the captioning feature. This function is only available when a composite video or S-Video input signal is selected and its system format is NTSC. <Note> Set your screen aspect ratio to 4:3. This function is not available when the aspect ratio is "16:9" or "Auto".
Security 	**Security** This projector provides a useful security function for the administrator to manage usage of the projector. Press ▶ to change the "Security" setting. If the security function is enabled, your must enter the "Administrator Password" first before changing the security settings. • Select "On" to enable the security function. The user has to enter a password to operate the projector. Please refer to the "User Password" section for details. • If "Off" is selected, then the user can turn on the projector without password.
	Timeout(Min.) Once "Security" is activated to "On", the administrator can set timeout function. • Press ◀ or ▶ to select the timeout interval. • The range is from 10 minute to 990 minutes. • When the time is up, the projector will prompt the user to enter the password again. • The factory default setting of "Timeout(Min.)" is "Off". • Once the security function is enabled, the projector will request user to enter password when switch on the projector . Both "User Password" and "Administrator Password" can be accepted for this dialogue.

Note: For 1080P models, to get best quality for you desired image, suggest end-user set PC resolution to 1920x1080 before you use this function.

 	User password • Press ▶ to setup or change the "User Password". • Press number keys to set your password on the remote control and press "MENU" to confirm. • Press ◀ to delete character. • Enter the password when you see "Confirm Password" displayed. • The password should be between 4 and 8 characters long. • If you select "Request password only when plugging the power cord in.", the projector will prompt the user to enter the password every time the power cord is plugged. • If you select "Always request the password when turning the projector on.", the user has to enter the password every time when the projector is turned on.
	Administrator Password The "Administrator Password" can be used in both the "Enter Administrator Password" and "Enter Password" dialog boxes. • Press ▶ to change the "Administrator Password". • The factory default of "Administrator Password" is "1234". If you forgot your administrator password, do the following to retrieve the administrator password: • An unique 6-digit "Universal Password" which is printed on the Security Card (please check accessory in the box). This unique password is the number which will be accepted by projector anytime no matter what the Administrator Password is. • If losing this security card and number, please contact with an Acer service center.
VGA OUT (Standby)	• Default is "Off". Choose "On" to enable VGA OUT connection.
Auto Screen	• Default is "On", the down/up move of electronic screen will be related with power on/off of Projector.
Reset	• Press the ▶ button and choose "Yes" to return the parameters on all menus to the factory default settings.
PIP	• Choose "On" to see two screens at the same time. • Choose "Off" to disable the function.
PIP Source	Press ◀ and ▶ to choose the secondary video source: Composite, S-Video or Component signal.
PIP Location	Choose the PIP secondary signal location on the display screen.
PIP Size	Choose the PIP secondary signal size on the display screen.

Note: When PIP function is activated, zoom and keystone function is unavailable.

Note: "PIP", " PIP Source", "PIP Location" and "PIP Size" functions are only supported under HDMI or DVI mode.

Timer

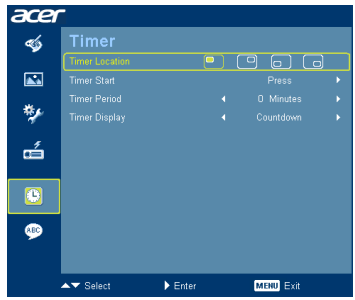

Timer Location	• Choose the location of the timer on the screen.
Timer Start	• Press ▶ to start or stop the timer.
Timer Period	• Press ◀ or ▶ to adjust the timer period.
Timer Display	• Press ◀ or ▶ to which timer mode to display on the screen.

Language

Language	Choose the multilingual OSD menu. Use the ▲ or ▼ key to select your preferred menu language. • Press ▶ to confirm the selection.

Appendices

Troubleshooting

If you experience a problem with your Acer projector, refer to the following troubleshooting guide. If the problem persists, please contact your local reseller or service center.

Image Problems and Solutions

#	Problem	Solution
1	No image appears onscreen	• Connected as described in the "Getting Started" section. • Ensure none of the connector pins are bent or broken. • Check if the projector lamp has been securely installed. Please refer to the "Replacing the Lamp" section. • Make sure you have removed the lens cap and the projector is switched on.

2	Partial, scrolling or incorrectly displayed image (For PC (Windows 2000/XP/Vista/ Windows 7))	• Press "RESYNC" on the remote control or control panel.
		• For an incorrectly displayed image:
		  • Open "My Computer," open the "Control Panel," and then double-click the "Display" icon.
		  • Select the "Settings" tab.
		  • Verify that your display resolution setting is lower than or equal to UXGA (1600 x 1200).
		  • Click the "Advanced Properties" button.
		If the problem still appears, change the monitor display you are using and follow the steps below:
		  • Verify that the resolution setting is lower than or equal to UXGA (1600 x 1200).
		  • Click the "Change" button under the "Monitor" tab.
		  • Click "Show all devices". Next, select "Standard monitor types" under the SP box, and choose the resolution mode you need under the "Models" box.
		  • Verify that the resolution setting of the monitor display is lower than or equal to UXGA (1600 x 1200).

3	Partial, scrolling or incorrectly displayed image (for notebooks)	• Press "RESYNC" on the remote control or control panel.
		• For an incorrectly displayed image:
		  • Follow the steps for item 2 (above) to adjust the resolution of your computer.
		  • Press the toggle output settings. Example: [Fn]+[F4], Compaq [Fn]+[F4], Dell [Fn]+[F8], Gateway [Fn]+[F4], IBM [Fn]+[F7], HP [Fn]+[F4], NEC [Fn]+[F3], Toshiba [Fn]+[F5]
		• If you experience difficulty changing resolutions or your monitor freezes, restart all equipment including the projector.

4	The screen of the notebook computer is not displaying your presentation	• If you are using a Microsoft® Windows® based notebook: Some notebook PCs may deactivate their own screens when a second display device is in use. Each has a different way to be reactivated. Refer to your computer's manual for detailed information. • If you are using an Apple® Mac® OS based notebook: In System Preferences, open Display and select Video Mirroring "On".
5	Image is unstable or flickering	• Adjust the "Tracking" to correct it. Refer to the "Image" section for more information. • Change the display color depth settings on your computer.
6	Image has vertical flickering bar	• Check and reconfigure the display mode of your graphics card to make it compatible with the projector.
7	Image is out of focus	• Make sure the lens cap is removed. • Adjusts the focus ring on the projector lens. • Make sure the projection screen is within the required distance of 3.3 to 32.6 feet (1.0 to 10.0 meters) from the projector. Refer to the "How to Get a Preferred Image Size by Adjusting Distance and Zoom" section for more information.
8	Image is stretched when displaying a "widescreen" DVD title	When you play a DVD encoded in anamorphic or 16:9 aspect ratio you may need to adjust the following settings: • If you play a 4:3 format DVD title, please change the format to 4:3 in the projector OSD. • If the image is still stretched, you will also need to adjust the aspect ratio. Set up the display format to 16:9 (wide) aspect ratio on your DVD player. • If you play an Letterbox(LBX) format DVD title, please change the format to Letterbox(LBX) in the projector OSD.

9	Image is too small or too large	• Adjust the zoom ring on the top of the projector. • Move the projector closer to or further from the screen. • Press "MENU" on the remote control or on the control panel. Go to "Image --> Aspect Ratio" and try different settings.
10	Image has slanted sides	• If possible, reposition the projector so that it is centered on the screen. • Press the "Keystone ⏢ / ⏢ " on the control panel or on the remote control until the sides are vertical. • Press the "Keystone" on the OSD until the sides are vertical.
11	Image is reversed	• Select "Image --> Projection" on the OSD and adjust the projection direction.

Problems with the Projector

#	Condition	Solution
1	The projector stops responding to all controls	If possible, turn off the projector, then unplug the power cord and wait at least 30 seconds before reconnecting power.
2	Lamp burns out or makes a popping sound	When the lamp reaches the end of its useful life, it will burn out and may make a loud popping sound. If this happens, the projector will not turn on until the lamp module has been replaced. To replace the lamp, follow the procedures in the "Replacing the Lamp" section.

OSD Messages

#	Condition	Message Reminder
1	Message	Fan Fail - the system fan is not working. Fan Fail. Lamp will automatically turn off soon. Projector Overheated - the projector has exceeded its recommended operating temperature and must be allowed to cool down before it may be used. Please also check the dust filters if they are installed. If the dust filter is clogged with dust, please clean it. Please refer to "Cleaning and replacing the dust filter" for details. Projector Overheated. Lamp will automatically turn off soon. Replace the lamp - the lamp is about to reach its maximum lifetime. Prepare to replace it soon. Lamp is approaching the end of its useful life in full power operation. Replacement suggested!

LED & Alarm Definition Listing

LED Messages

Message	Lamp LED	Temp LED	Power LED	
	Red	Red	Red	Blue
Standby (power cord plugged in)	--	--	V	--
Power button ON	--	--	--	V
Lamp retry	--	--	--	Quick flashing
Turning off (cooling state)	--	--	Quick flashing	--
Turning off (cooling completed)	--	--	V	--
Error (thermal failure)	--	V	--	V
Error (fan lock failure)	--	Quick flashing	--	V
Error (lamp breakdown)	V	--	--	V
Error (color Wheel fail)	Quick flashing	--	--	V

Replacing and cleaning the dust filters

Replacing the dust filters (Illustration #1)

1 Turn the projector off then unplug the power cord.
2 Unplug the corner (Illustration #❶)
3 Pull out the dust filter (Illustration #❷)
4 Clean or replace the dust filter.
5 To put the dust filters back, reverse the previous step.
6 When dust filters are implemented, please set the system to be high altitude mode. (Settings: Menu->Management->High Altitude->On)

Note: When the dust filters are installed, please make sure the system is at high altitude mode.

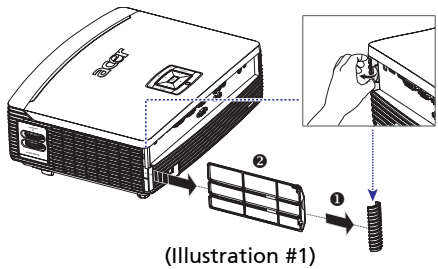

(Illustration #1)

Cleaning the dust filters

Clean the dust filters after every 1000 hours of use. If they are not cleaned periodically, they can become clogged with dust, preventing proper ventilation.

This can cause overheating and damage the projector. (Normally 1000 hours is recommended, clean period will be depending on actual environment)

Please find following steps for cleaning procdure:

1 To clean the dust filters, use a small vacuum cleaner designed for computers and other office equipments. It also can be cleaned by water. (Illustration #2)
2 If the dirt is difficult to remove or the filter is broken, please contact your local dealer or service center to obtain a new filter.

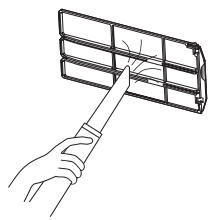

(Illustration #2)

Replacing the Lamp

Use a screwdriver to remove the screw(s) from the cover, and then pull out the lamp.

The projector will detect the lamp life. You will be shown a warning message "**Lamp is approaching the end of its useful life in full power operation. Replacement Suggested!**" When you see this message, change the lamp as soon as possible. Make sure the projector has been cooling down for at least 30 minutes before changing the lamp.

Warning: The lamp compartment is hot! Allow it to cool down before changing the lamp.

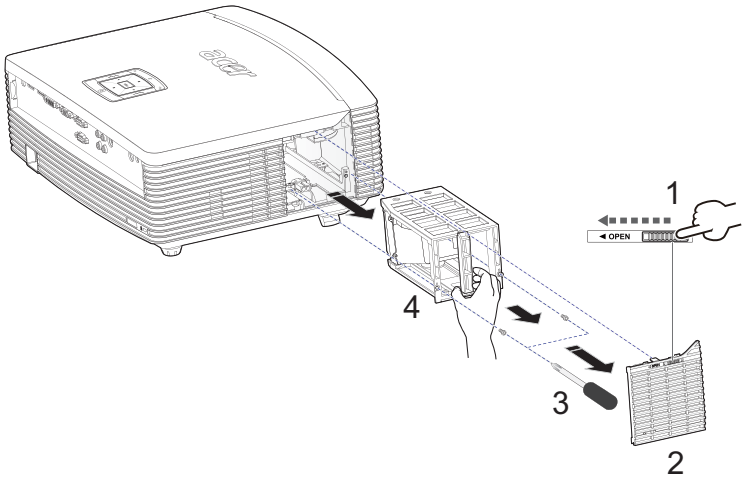

To Change the Lamp

1 Turn off the projector by pressing the power button.
2 Allow the projector at least 30 mins to cool down.
3 Disconnect the power cord.
4 Find the "OPEN" button on side of the projector and push it to open the cover. (Illustration #1)
5 Open the cover. (Illustration #2)
6 Remove the two screws that secure the lamp module.(Illustration #3)
7 Pull out the lamp module by force. (Illustration #4)

To replace the lamp module, reverse the previous step.

Warning: To reduce the risk of personal injury, do not drop the lamp module or touch the lamp bulb. The bulb may shatter and cause injury if it is dropped.

Ceiling Mount Installation

If you wish to install the projector using a ceiling mount, please refer to the steps below:

1 Drill four holes into a solid, structurally sound part of the ceiling, and secure the mount base.

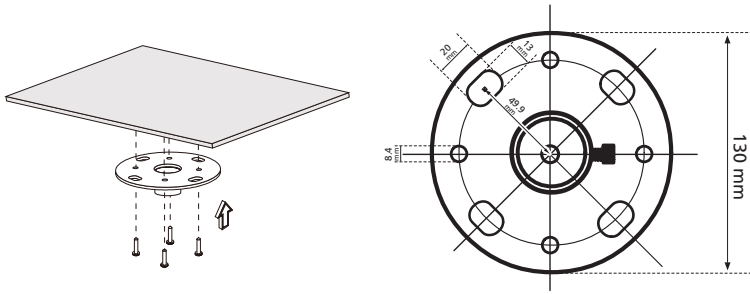

Note: Screws are not included. Please obtain the appropriate screws for your type of ceiling.

2 Secure the ceiling rod using the appropriate type of four-cylinder screws.

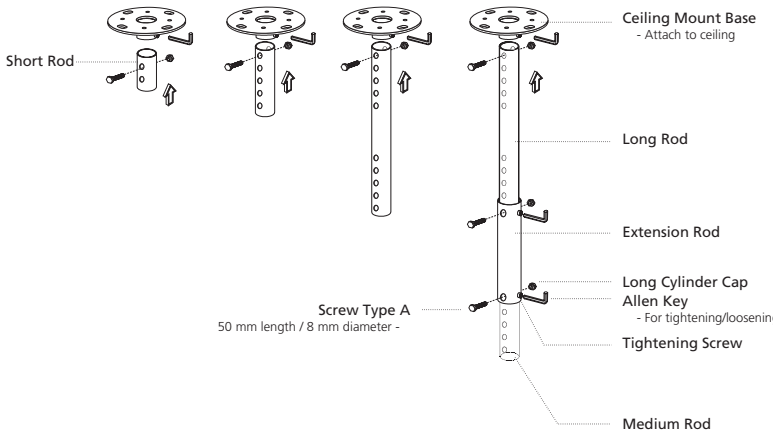

3 Use the appropriate number of screws for the projector size to attach the projector to the ceiling mount bracket.

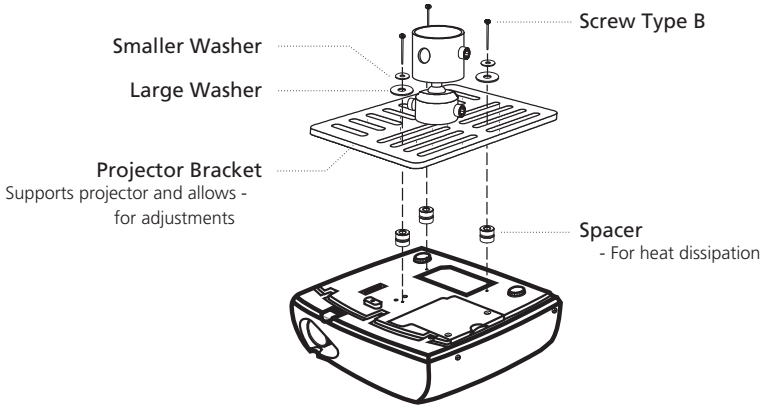

Note: It is recommended that you keep a reasonable space between the bracket and the projector to allow for proper heat distribution. Use two washers for extra support, if deemed necessary.

4 Attach the ceiling bracket to the ceiling rod.

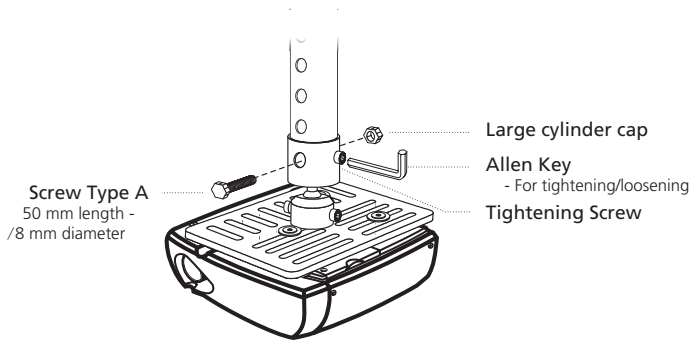

5 Adjust the angle and positioning as necessary.

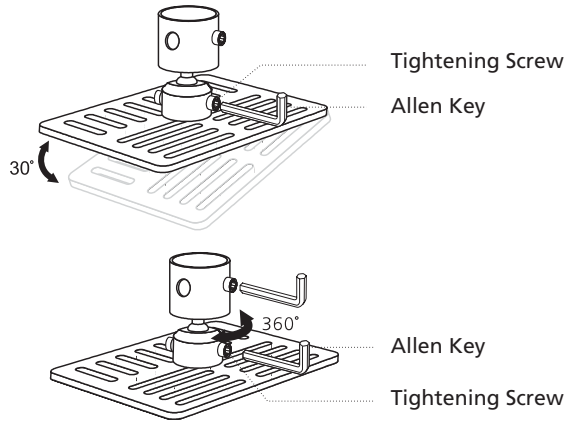

Note: The appropriate type of screw and washer for each model is listed in the table below. 3 mm diameter screws are enclosed in the screw pack.

Models	Screw Type B		Washer Type	
	Diameter (mm)	Length (mm)	Large	Small
H9500BD/E250D/ HE-820J	3	20	V	V

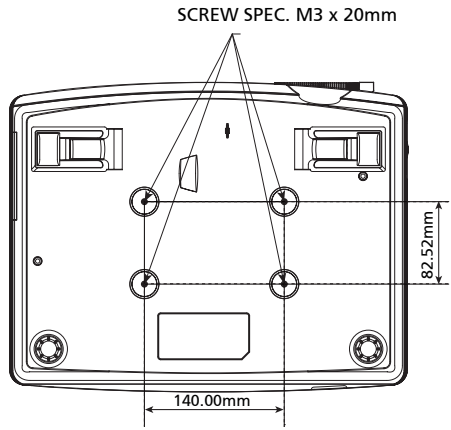

Specifications

The specifications listed below are subject to change without notice. For final specs, please refer to Acer's published marketing specifications.

Projection system	DLP®
Resolution	Native: 1080P (1920 x 1080), Maximum: UXGA (1600 x 1200),WSXGA+ (1680 x 1050), 1080p (1920 x 1080)
Computer compatibility	IBM PC and compatibles, Apple Macintosh, iMac and VESA standards: SXGA, XGA, VGA, SVGA, SXGA+, WXGA, WXGA+, WSXGA+
Video compatibility	NTSC (3.58/4.43), PAL (B/D/G/H/I/M/N), SECAM (B/D/G/K/K1/L), HDTV (720p, 1080i/p), EDTV (480p, 576p), SDTV (480i, 576i)
Aspect ratio	4:3, 16:9 (native), L.Box
Displayable colors	1.07 billion colors
Projection lens	F/2.45 - 2.9, f = 22.18 mm - 33.27 mm, 1.5X manual zoom lens
Projection screen size (diagonal)	20" (50 cm) - 300" (762 cm)
Projection distance	3.3' (1.0 m) - 32.6' (10.0 m)
Throw ratio	60"@2 m (1.49 - 2.28:1)
Horizontal scan rate	30 k - 100 kHz
Vertical refresh scan rate	50 - 120 Hz
Lamp type	280 W user-replaceable lamp
Keystone correction	+/- 15 degrees
Weight	7.1kg / 15.7 lbs
Dimensions (W x D x H)	398 mm x 310 mm x 140 mm (15.7" x 12.2" x 5.5")
Remote control	Backlight function
Digital Zoom	8x
Power supply	AC input 100 - 240 V, 50 - 60 Hz
Power consumption	445 W ± 10%
Operating temperature	5°C to 35°C / 41°F to 95°F
I/O connectors	• Power socket x1 • VGA input x2 • Composite input x1 • S-Video x1 • VGA output x1 • HDMI x2 • DVI-D x1: with HDCP support • RS232 3-pin min dim jack x1 • USB x1: for firmware upgrade • 3 RCA Component video x1 • DC Jack x1

Standard package contents	• AC power cord x1 • VGA cable x1 • HDMI cable x1 • Composite video cable x1 • Remote control x1 • Battery x 2 (for remote control) • User's Guide (CD-ROM) x1 • Quick start guide x1 • Security card x1 • Carrying case x1 • Dust filter x1 • 3D glasses x1

* Design and specifications are subject to change without notice.

Compatibility modes

A. VGA Analog

1 VGA Analog - PC Signal

Modes	Resolution	V.Frequency [Hz]	H.Frequency [KHz]
VGA	640x480	60	31.5
	640x480	72	37.9
	640x480	75	37.5
	640x480	85	43.3
	640x480	120	61.9
SVGA	800x600	56	35.1
	800x600	60	37.9
	800x600	72	48.1
	800x600	75	46.9
	800x600	85	53.7
	800x600	120	77.4
XGA	1024x768	60	48.4
	1024x768	70	56.5
	1024x768	75	60.0
	1024x768	85	68.7
	1024x768	120	99.0
SXGA	1152x864	70	63.8
	1152x864	75	67.5
	1152x864	85	77.1
	1280X1024	60	64.0
	1280X1024	72	77.0
	1280X1024	75	80.0
	1280X1024	85	91.1
QuadVGA	1280x960	60	60.0
	1280x960	75	75.2
SXGA+	1400x1050	60	65.3
UXGA	1600x1200	60	75.0
PowerBook G4	640x480	60	31.4
	640x480	66.6(67)	34.9
	800x600	60	37.9
	1024x768	60	48.4
	1152x870	75	68.7
	1280x960	75	75.0
i Mac DV (G3)	1024x768	75	60.0

2 VGA Analog - Extended Wide timing

Modes	Resolution	V.Frequency [Hz]	H.Frequency [KHz]
WXGA	1280x768	60	47.8
	1280x768	75	60.3
	1280x768	85	68.6
	1280x720	60	44.8
	1280x720	120	92.9
	1280x800	60	49.6
	1440x900	60	59.9
WSXGA+	1680x1050	60	65.3
	1920x1080 (1080p)	60	67.5
	1366x768	60	47.7

3 VGA Analog - Component Signal

Modes	Resolution	V.Frequency [Hz]	H.Frequency [KHz]
480i	720x480 (1440x480)	59.94 (29.97)	15.7
576i	720x576 (1440x576)	50 (25)	15.6
480p	720x480	59.94	31.5
576p	720x576	50	31.3
720p	1280x720	60	45.0
720p	1280x720	50	37.5
1080i	1920x1080	60 (30)	33.8
1080i	1920x1080	50 (25)	28.1
1080p	1920x1080	23.97/24	27.0
1080p	1920x1080	60	67.5
1080p	1920x1080	50	56.3

B. HDMI Digital

1 HDMI - PC Signal

Modes	Resolution	V.Frequency [Hz]	H.Frequency [KHz]
VGA	640x480	60	31.5
	640x480	72	37.9
	640x480	75	37.5
	640x480	85	43.3
	640x480	120	61.9

SVGA	800x600	56	35.1
	800x600	60	37.9
	800x600	72	48.1
	800x600	75	46.9
	800x600	85	53.7
	800x600	120	77.4
XGA	1024x768	60	48.4
	1024x768	70	56.5
	1024x768	75	60.0
	1024x768	85	68.7
	1024x768	120	99.0
SXGA	1152x864	70	63.8
	1152x864	75	67.5
	1152x864	85	77.1
	1280x1024	60	64.0
	1280x1024	72	77.0
	1280x1024	75	80.0
	1280x1024	85	91.1
QuadVGA	1280x960	60	60.0
	1280x960	75	75.2
SXGA+	1400x1050	60	65.3
UXGA	1600x1200	60	75.0
PowerBook G4	640x480	60	31.4
	640x480	66.6(67)	34.9
	800x600	60	37.9
	1024x768	60	48.4
	1152x870	75	68.7
	1280x960	75	75.0
i Mac DV (G3)	1024x768	75	60.0

2 DVI - Extended Wide timing

Modes	Resolution	V.Frequency [Hz]	H.Frequency [KHz]
WXGA	1280x768	60	47.8
	1280x768	75	60.3
	1280x768	85	68.6
	1280x720	60	44.8
	1280x720	120	92.9
	1280x800	60	49.6
	1440x900	60	59.9
WSXGA+	1680x1050	60	65.3
	1920x1080 (1080p)	60	67.5
	1366x768	60	47.7

3 HDMI - Video Signal

Modes	Resolution	V.Frequency [Hz]	H.Frequency [KHz]
480i	720x480(1440x480)	59.94(29.97)	15.7
576i	720x576(1440x576)	50(25)	15.6
480p	720x480	59.94	31.5
576p	720x576	50	31.3
720p	1280x720	60	45.0
720p	1280x720	50	37.5
1080i	1920x1080	60(30)	33.8
1080i	1920x1080	50(25)	28.1
1080p	1920x1080	23.97/24	27.0
1080p	1920x1080	60	67.5
1080p	1920x1080	50	56.3

4 HDMI - 1.4a 3D Timing

Modes	Resolution	V.Frequency [Hz]	H.Frequency [KHz]
720p (Frame Packing)	1280x720	50	37.5
720p (Frame Packing)	1280x720	60	45.0
1080p (Frame Packing)	1920x1080	24	27.0
720p (Top and Bottom)	1280x720	50	37.5
720p (Top and Bottom)	1280x720	60	45.0
1080i (Top and Bottom)	1920x1080	50(25)	28.1
1080i (Top and Bottom)	1920x1080	60(30)	33.8
1080p (Top and Bottom)	1920x1080	24	27.0
1080p (Top and Bottom)	1920x1080	50	56.3
1080p (Top and Bottom)	1920x1080	60	67.5
720p (Side by Side (Half))	1280x720	60	45.0
1080i (Side by Side (Half))	1920x1080	50(25)	28.1
1080i (Side by Side (Half))	1920x1080	60(30)	33.8
1080p (Side by Side (Half))	1920x1080	50	56.3
1080p (Side by Side (Half))	1920x1080	60	67.5
Graphic source monitor range limits	Horizontal scan rate:	30k-100kHz	
	Vertical scan rate:	50-120Hz	
	Max. pixel rate	Analog:162MHz Digital:165MHz	
HDMI Source Range Limit	Max.TMDS rate	200MHz	

Regulations and safety notices

FCC notice

This device has been tested and found to comply with the limits for a Class B digital device pursuant to Part 15 of the FCC rules. These limits are designed to provide reasonable protection against harmful interference in a residential installation. This device generates, uses, and can radiate radio frequency energy and, if not installed and used in accordance with the instructions, may cause harmful interference to radio communications.

However, there is no guarantee that interference will not occur in a particular installation. If this device does cause harmful interference to radio or television reception, which can be determined by turning the device off and on, the user is encouraged to try to correct the interference by one or more of the following measures:

- Reorient or relocate the receiving antenna.
- Increase the separation between the device and receiver.
- Connect the device into an outlet on a circuit different from that to which the receiver is connected.
- Consult the dealer or an experienced radio/television technician for help.

Notice: Shielded cables

All connections to other computing devices must be made using shielded cables to maintain compliance with FCC regulations.

Notice: Peripheral devices

Only peripherals (input/output devices, terminals, printers, etc.) certified to comply with the Class B limits may be attached to this equipment. Operation with non-certified peripherals is likely to result in interference to radio and TV reception.

Caution

Changes or modifications not expressly approved by the manufacturer could void the user's authority, which is granted by the Federal Communications Commission, to operate this device.

Operation conditions

This device complies with Part 15 of the FCC Rules. Operation is subject to the following two conditions: (1) this device may not cause harmful interference, and (2) this device must accept any interference received, including interference that may cause undesired operation.

Notice: Canadian users

This Class B digital apparatus complies with Canadian ICES-003.

Remarque à l'intention des utilisateurs canadiens

Cet appareil numérique de la classe B est conforme a la norme NMB-003 du Canada.

Declaration of Conformity for EU countries

Acer hereby declares that this projector series is in compliance with the essential requirements and other relevant provisions of Directive 1999/5/EC.

Compliant with Russian regulatory certification

ME61

Radio device regulatory notice

Note: The regulatory information below is for models with wireless LAN and/or Bluetooth only.

General

This product complies with the radio frequency and safety standards of any country or region in which it has been approved for wireless use. Depending on configurations, this product may or may not contain wireless radio devices (such as wireless LAN and/or Bluetooth modules).

Canada — Low-power license-exempt radio communication devices (RSS-210)

a Common information
Operation is subject to the following two conditions:
1. This device may not cause interference, and
2. This device must accept any interference, including interference that may cause undesired operation of the device.

b Operation in 2.4 GHz band
To prevent radio interference to the licensed service, this device is intended to be operated indoors and installation outdoors is subject to licensing.

List of applicable countries

This device must be used in strict accordance with the regulations and constraints in the country of use. For further information, please contact the local office in the country of use. Please see http://ec.europa.eu/enterprise/rtte/implem.htm for the latest country list.

Acer Incorporated
8F, 88, Sec. 1, Xintai 5th Rd., Xizhi,
New Taipei City 221,Taiwan, R.O.C.

Declaration of Conformity

We,

Acer Incorporated
8F, 88, Sec. 1, Xintai 5th Rd., Xizhi, New Taipei City 221,Taiwan, R.O.C.
Contact Person: Mr. Easy Lai, e-mail:easy_lai@acer.com.tw

And,

Acer Italy s.r.l
Via Lepetit, 40, 20020 Lainate (MI) Italy
Tel: +39-02-939-921, Fax: +39-02 9399-2913, www.acer.it

Hereby declare that:

Product: **Projector**
Trade Name: **Acer**
Model Number: **M1P1011**
Machine Type: **H9500BD/E250D/HE-820J**

Is compliant with the essential requirements and other relevant provisions of the following EC directives, and that all the necessary steps have been taken and are in force to assure that production units of the same product will continue comply with the requirements.

EMC Directive 2004/108/EC as attested by conformity with the following harmonized standards:

-. EN55022, AS/NZS CISPR22, Class B
-. EN55024
-. EN61000-3-2 Class A
-. EN61000-3-3

Low Voltage Directive 2006/95/EC as attested by conformity with the following harmonized standard:

-. EN60950-1

RoHS Directive 2002/95/EC on the Restriction of the Use of certain Hazardous Substances in Electrical and Electronic Equipment

-. The maximum concentration values of the restricted substances by weight in homogenous material are:

Lead	0.1%	Polybrominated Biphenyls (PBB's)	0.1%
Mercury	0.1%	Polybrominated Diphenyl Ethers (PBDE's)	0.1%
Hexavalent Chromium	0.1%	Cadmium	0.01%

Directive 2009/125/EC with regard to establishing a framework for the setting of ecodesign requirements for energy-related product.

Acer Incorporated
8F, 88, Sec. 1, Xintai 5th Rd., Xizhi,
New Taipei City 221,Taiwan, R.O.C.

The standards listed below are applied to the product if built with WLAN module or wireless keyboard and mouse.

R&TTE Directive 1999/5/EC as attested by conformity with the following harmonized standard:

- **Article 3.1(a) Health and Safety**
  - -. EN60950-1
  - -. EN62311

- **Article 3.1(b) EMC**
  - -. EN301 489-1
  - -. EN301 489-17

- **Article 3.2 Spectrum Usages**
  - -. EN300 328
  - -. EN301 893 (Applicable to 5GHz high performance RLAN).

Year to begin affixing CE marking 2011.

Easy Lai

Easy Lai / Manager
Regulation Center, Acer Inc.

Jul. 25, 2011
Date

Acer America Corporation

333 West San Carlos St., San Jose
CA 95110, U. S. A.
Tel : 254-298-4000
Fax : 254-298-4147
www.acer.com

Federal Communications Commission Declaration of Conformity

This device complies with Part 15 of the FCC Rules. Operation is subject to the following two conditions: (1) this device may not cause harmful interference, and (2) this device must accept any interference received, including interference that may cause undesired operation.

The following local Manufacturer / Importer is responsible for this declaration:

Product:	**DLP Projector**
Model Number:	**M1P1011**
Machine Type:	**H9500BD/E250D/HE-820J**
Name of Responsible Party:	**Acer America Corporation**
Address of Responsible Party:	**333 West San Carlos St. San Jose, CA 95110 U. S. A.**
Contact Person:	**Acer Representative**
Phone No.:	**254-298-4000**
Fax No.:	**254-298-4147**