苏州市昆腾电子有限公司
SUZHOU CITY KUNTENG ELECTRONIC CO., LTD

用户手册

User Manual

KT-LCD10H e-Bike Special Meter

WWW.SZKTDZ.COM

Contents

Preface…….……. 4

Outlook and Size……... 4

Meter Dimension …… 4

Button Box Dimension…….. 5

Main Material and Color…….……..... 5

Wiring Schematic…….……. 5

Installation Instruction…….…….. 5

Φ 31.8 handlebar diameters install icon……..…..… 5

Φ 22.2 handlebar diameters install icon…….….…. 6

Physical installation icon..... 6

Function Overview……..….. 6

Display Content…….….…... 7

Button Definition…….….…. 7

Normal Operation……..... 8

On/Off……..... 8

Display Interface…….….……..... 8

Display 1……..……..... 8

Display 2……..... 9

Display 3……..……..... 10

Display of Turned on Throttle……. 11

Display of Power-assist Startup…….. 12

PAS Ratio (or Throttle) Gear Switch…….……. 12

Push Function……..…… 13

Cruise Function……...… 13

Turn On/Off Backlight…….……... 13

Battery Capacity Indicator……..……..… 14

Motor Power and Temperature 14

Environment Temperature…….. 15
Single Data Clearing……... 16
Automatic Prompt Interface……..….. 16
Error Code Display…….…..... 16
Motor Operating Temperature Alarm……..... 17
User Project Setting……..... 17
General Project Setting…… 17
Maximum Trip Speed……..... 17
Wheel Diameter……..…. 18
Metric and Imperial Units…….. 19
Exit General Project Setting……... 19
P Parameter Setting…….……... 20
P1 Motor Characteristic Parameter Setting 20
P2 Wheel Speed Pulse Signal Setting 21
P3 Power Assist Control Mode Setting 21
P4 Throttle Startup Setting 22
P5 Power Monitoring Setting 22
Exit P Parameter Setting 23
C Parameter Setting 23
C1 Power-assist Sensor and Parameter Selection Setting 24
C2 Motor Phase Classification Coding Setting 24
C3 Power-assist Ratio Gear Initialization Setting 25
C4 Throttle Function Setting 26
C5 Controller Maximum Current Adjustment Setting 27
C6 Backlight Brightness Adjustment Setting 28
C7 Cruise Function Setting 29
C8 Motor Operating Temperature Display Setting 29
C9 Power-on Password Setting 30
C10 Automatic Restore Default Setting 31
C11 Attribute Selection Setting 32

C12 Controller Minimum Voltage Adjustment Setting 33
C13 ABS brakes of the controller and parameters of anti-charge control Setting 34
C14 Power-assist Tuning Parameters Setting 35
C15 Push-assist Speed Parameters Setting.....36
Exit C Parameter Setting..... 36
L parameters Setting. 37
L1 parameters Setting. 37
L2 parameters Setting. 37
L3 parameters Setting. 38
Parameter Copy 38
User Setting Note 40
Version Information…… 40

Preface

The illustrated manual will help you understand and be familiar with the meter function, guiding you on how to operate the meter, how to set the project parameters, how to achieve the best match of the three as motor, controller and meter to improve electronic control performance of the electric motor. This manual covers installation, operation, parameter setting of the meter and how to use it properly, which help you resolve the problems appeared in practical use.

Outlook and Size

○ **Meter Dimension**

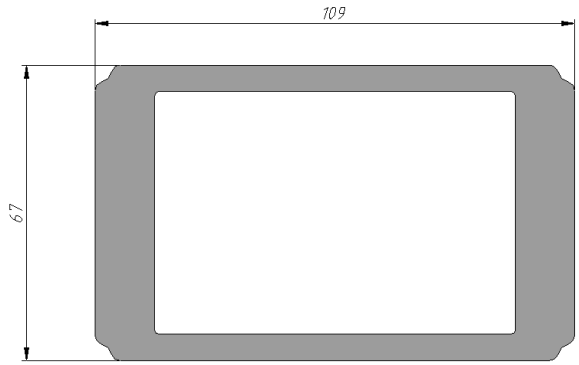

Meter Dimension

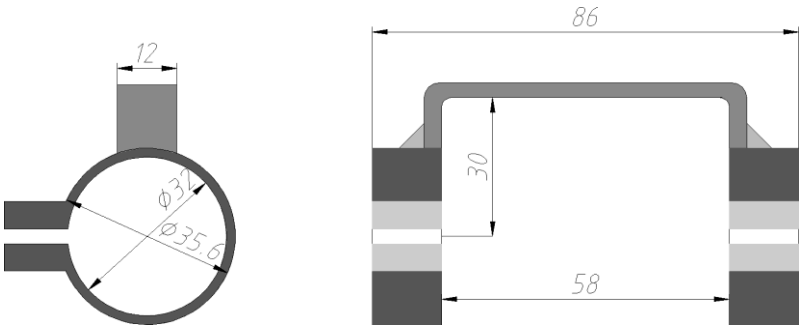

Dual Bracket Mounting Dimension

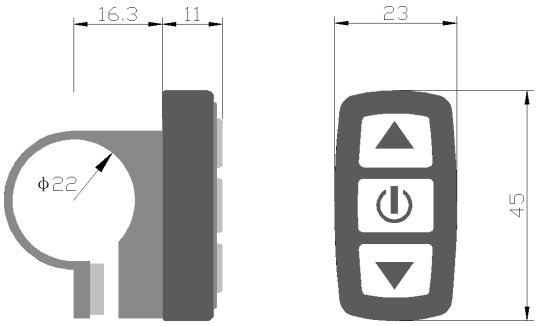

○ **Button Box Dimension**

○ **Main Material and Color**

PC material is mainly used for KT-LCD10H meter and button box housing, and the housing color is black.

○ **Wiring Schematic**

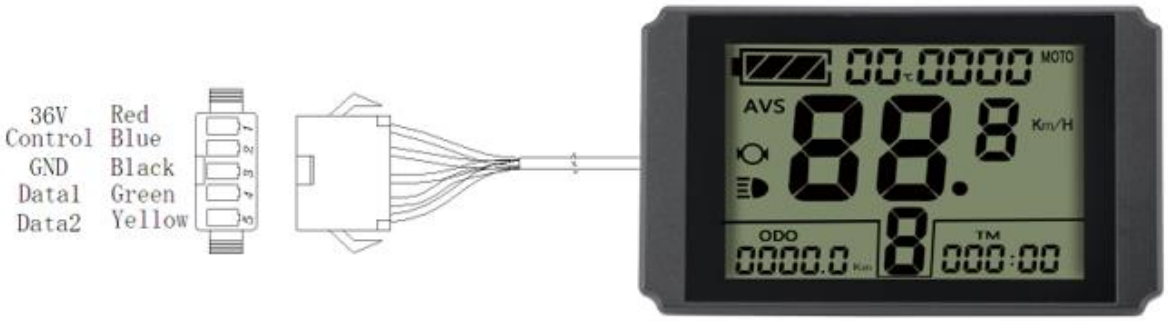

Installation Instruction

The meter body and button box are mounted on the handlebars of the electric vehicle, adjusting perspective. In the case that the vehicle is power off, the meter connectors are in plug connection to corresponding controller connectors. Turn on the power, electric vehicle and meter will be under normal operation, the meter installation is finished. The protection film on meter display panel should be torn.

○ Φ 31.8 handlebar diameters install icon

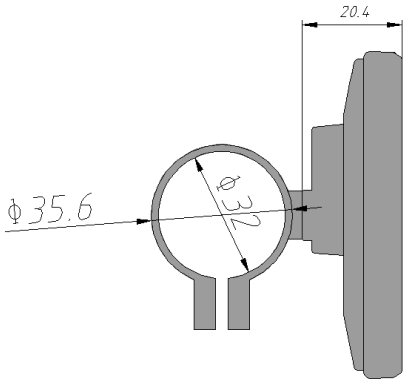

○ Φ 22.2 handlebar diameters install icon

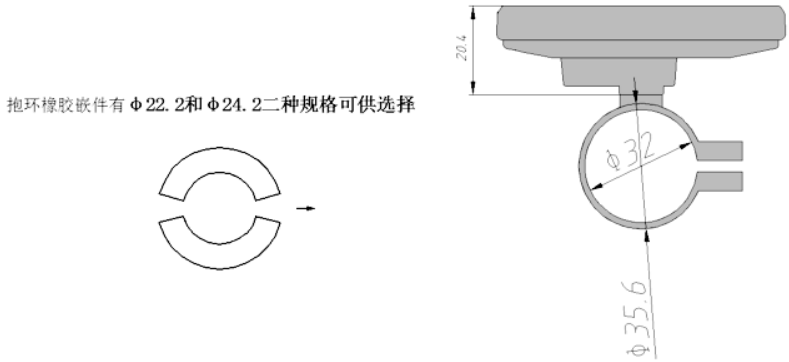

○ Physical installation icon

Function Overview

KT-LCD10H meter provide you with a variety of functions such as vehicle controls and vehicle status digitized displays to meet the trip demands.

◇ Trip time display (with displays of a single trip time (TM) and total trip time (TTM));

◇ Trip speed display (with displays of real-time speed (Km/H or MPH) and a single maximum speed (MXS) and a single average speed (AVS));

◇ Trip distance display (with displays of a single trip distance (DST) and total trip distance (ODO));

◇ Display of turned on handlebar;

◇ Display of power-assist startup;

◇ Power assistant ratio (or handlebar) gear (PAS) switch;

◇ 6Km/H power assistant push ( ) function;

◇ Cruise function (**CRUISE**);

◇ Battery capacity indicator ( );

◇ Real-time battery voltage (**VOL**) display;

◇ Motor power and temperature (**MOTOR W**) display;

◇ Brake display ( );

◇ Turn on backlighting and lights ( );

◇ Environment temperature (℃ or ℉) display;

◇ Data clearing;

◇ Fault code display;

◇ User parameter setting

◇ 24V, 36V, 48V supply voltage can automatic identification and be compatible

Display Content

The display content is shown as follow.

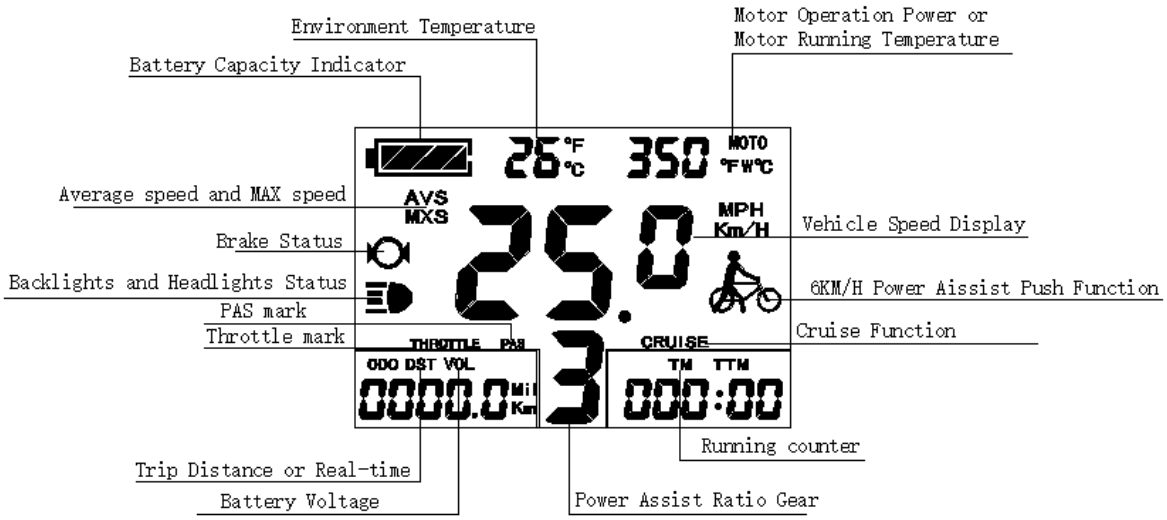

Button Definition

KT-LCD10H meter adopts the structural form with part design between the main part and operating buttons.

There are three keys on the operating panel of button box, which are icons of button (alt text UP), button (alt text SW) and (alt text DOWN).

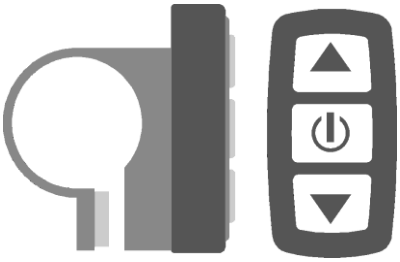

Button Box and Operating Panel

Normal Operation

○ **On/Off**

Hold button (SW) long, the meter is powered on and into normal operation, and it provides the controller with power supply. Under normal operating status, hold button (SW) long, the meter is powered off, meanwhile to shutdown the power supply of controllers. **When the vehicle is stopped and without any button operation on the meter for five minutes, the meter will automatically shut down, and the power supply of the electric vehicle will be powered off.** In power off mode, the power consumption of the meter and controller is zero.

○ **Display Interface**

Display 1：

The meter is startup to enter display 1.

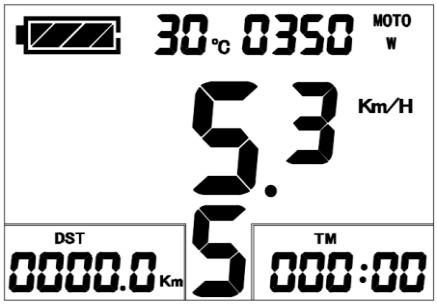

Display 1

The followings are shown on display 1.

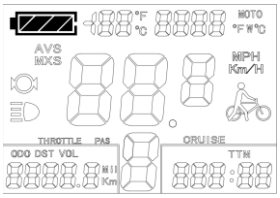

Battery Capacity Indicator

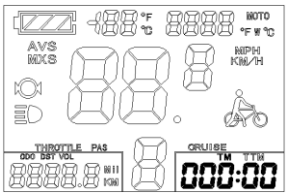

Single Trip Time (TM) Display

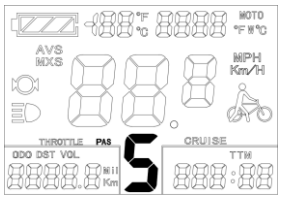

Power Assist Ratio Gear (ASSIST)

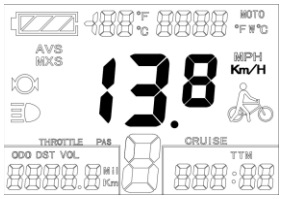

Real-time Trip Speed (Km/H)

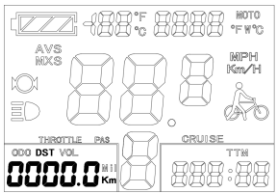

Single Trip Distance

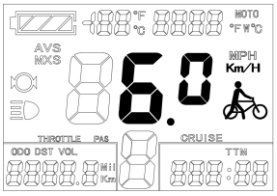

6Km/H Power Assist Function

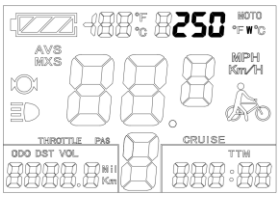

Motor Operation Power

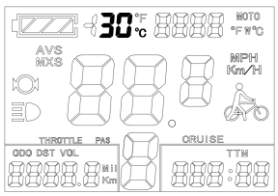

Environment Temperature

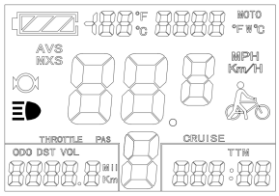

Backlights and Headlights Status

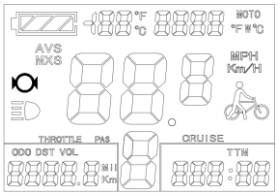

Brake Status

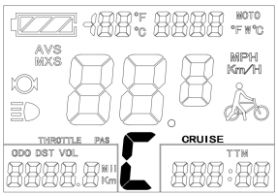

Cruise Function (CRUISE)

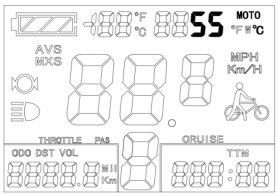

Motor Running Temperature

Display 2：

In display 1, press button (**SW**) to enter display 2.

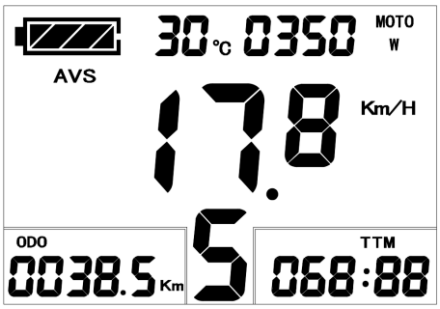

Display 2

The followings are shown on display 2:

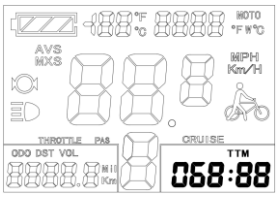

Total Trip Time (TTM)

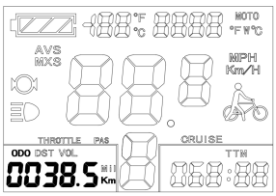

Total Trip Distance (ODO)

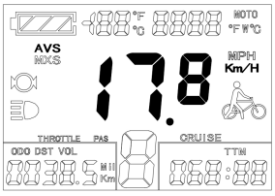

Single Average Speed (AVS)

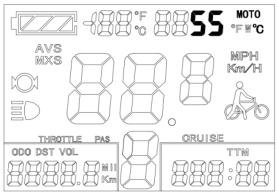

Motor Operating Temperature

In the riding mode after 5 seconds, display 2 automatically returns to display 1. In display 1, the original motor power is replaced by motor running temperature as is shown in Figure.

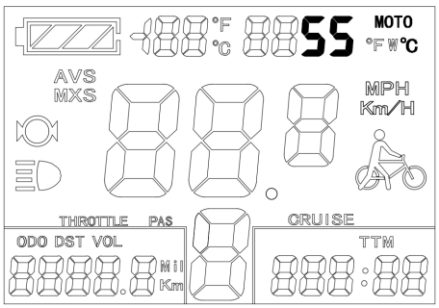

Display 3：

In display 2, press button (**SW**) to enter display 3.

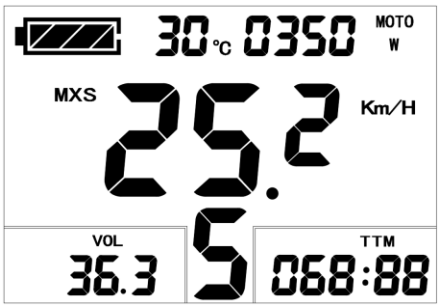

Display 3

The followings are shown on display 3.

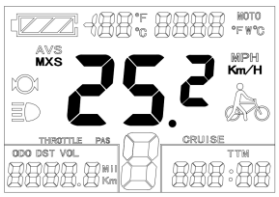

Single Maximum Speed (MXS)

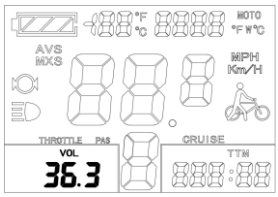

Real-time Voltage (VOL)

In the riding mode after 5 seconds, single maximum speed will automatically return to real-time trip speed (Km/H) as shown in the icon.

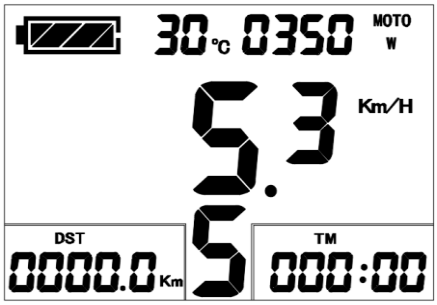

In display 3, press button (**SW**) again to enter display 1.

In each display interface, if you hold button (SW) long, the meter will be powered-off together with that of the controller.

○ **Display of turned on handlebar**

Rotate the handlebar under normal operating of the meter, the display interface shows the sign of turned-on handlebar, see the Figure below. The sign will be off automatically after about five seconds.

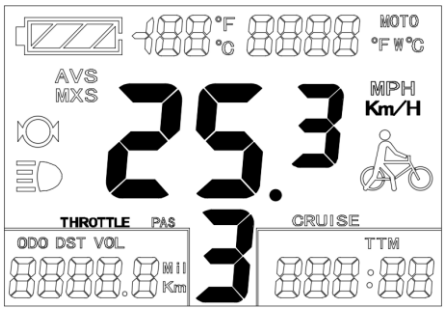

○ **Display of power-assist startup**

The meter is driving with power-assist under normal operating conditions, the display interface flashes the power-assist startup sign (ASSIST) as shown in the figure. The sign will be off automatically after about five seconds.

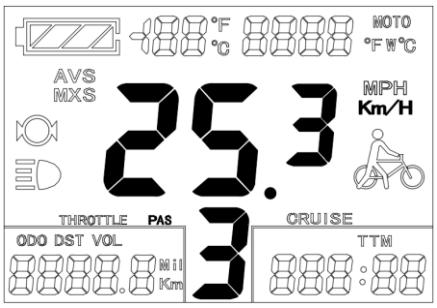

○ **PAS Ratio (or Handlebar) Gear Switch**

Under normal operation, press button **(UP)** or button **(DOWN)** to switch the power assist ratio (or handlebar) gear **(ASSIST)**, changing motor output power. Switching range is 0-5 gear (this can also be configured according to the customer requirements), gear 1 is for the lowest power, and gear 5 is for the highest power.

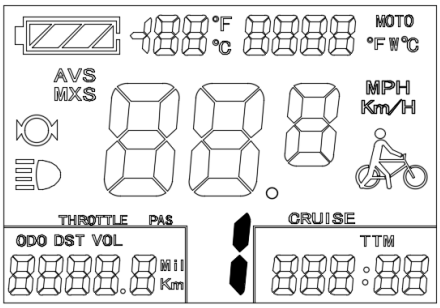

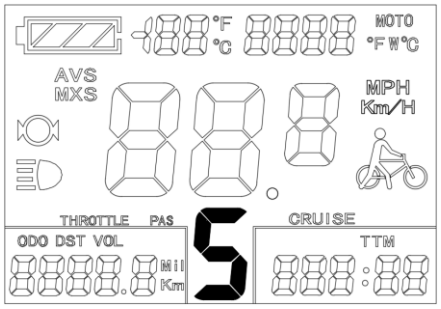

At every startup, the meter will automatically restore gear (this can also be configured as required by users) when it was at last shut down. When the power assist ratio is gear 0 zero, there's no power assist function.

○ **Power Assistant Push Function**

Users can use 6Km/H power assist function when pushing vehicles. Hold button **(DOWN)**, the meter assist function logo ( ) flashes, the vehicle drives at the speed of no more than 6Km/h. Release button **(DOWN)**, the assist function will be revoked.

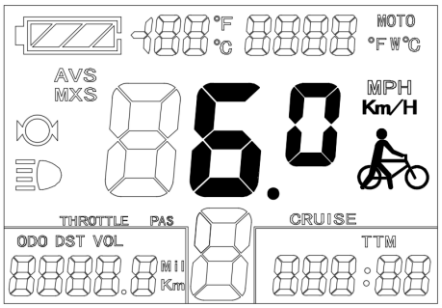

○ **Cruise Function**

When C7 parameter setting is 1 (see C parameter setting), the meter turns on cruise function, hold button **(DOWN)** long to enter the cruise status when the vehicle speed is more than 7 km/h, and the cruise function logo (CRUISE) lights. Brake or hold any button to revoke cruise function.

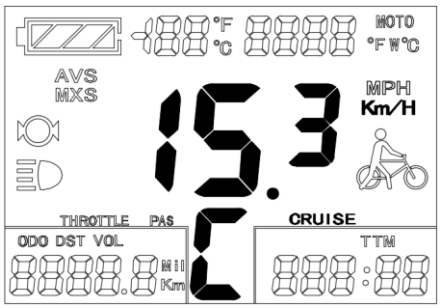

○ **Startup Backlights and Headlights**

Hold button **(UP)** long, the meter turns on the backlights as well as the vehicle headlights **(the Controller should have headlights driving and output functions),** meter backlighting and vehicle lights power logo ( ) light, hold button **(UP)** long again to turn off backlights and vehicle headlights.

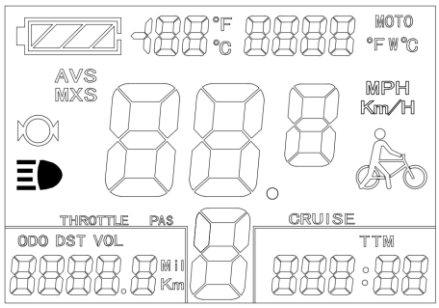

○ **Battery Capacity Indicator**

The meter can automatically identify 24V, 36V, 48V battery capacities when it is supporting use with the specified controller. When the battery capacity is over 70%, the four power displays of the meter are lit, when the battery capacities drop, the four power displays are off in order, when the power capacity is less than 15%, the four power displays are totally turned off.

When the controller is power off due to voltage shortage, the power display frame flashes, indicating the vehicle has been in voltage shortage and waiting for shutdown currently.

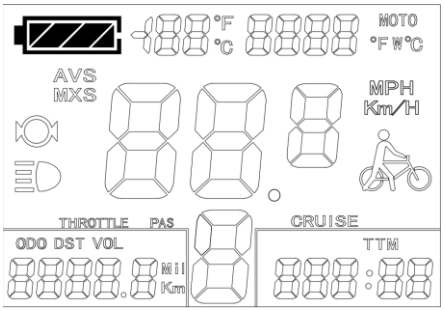

Voltage shortage flashes

Battery capacity indicator

○ **Motor Operating Power and Temperature**

Under the riding status of vehicle, the real time running and output power can be known via the meter displays.

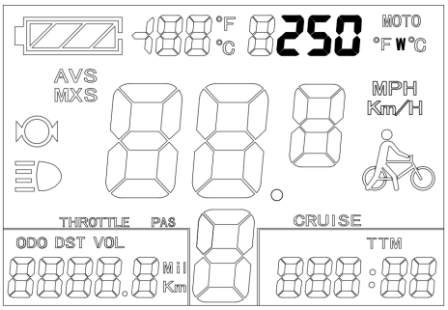

Motor operating power

The operating temperature of the motor shows there should be a temperature sensor installed in the Inner motor to output the temperature for signal detection simultaneously.

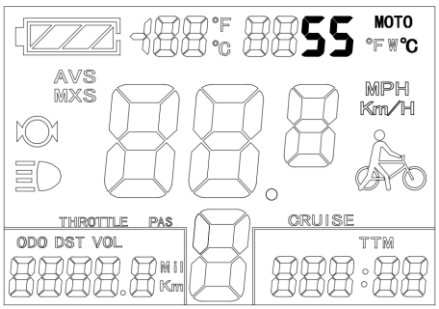

Motor operating temperature

When the motor operating temperature exceeds the warning value, temperature display flashes to alarm, meanwhile the motor controller will offer the appropriate protection to motor.

○ **Environment Temperature**

After startup, the environment temperature for using meter will be displayed in environment temperature display column.

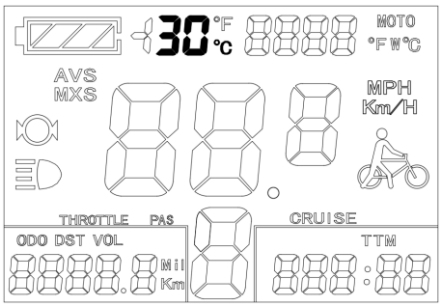

Environment temperature display

The temperature display value may be in deviation shortly after boot-up, and the display value will be gradually approaching the environment temperature within 10

minutes after boot-up.

○ **Single Data Clearing**

5 seconds after the meter is powered on, at display 1, hold both the ▲ button **(UP)** and the ▼ button **(DOWN)** simultaneously for about 2 seconds, the single trip time (TM) and single trip distance (DST) flicker, then hold ⏻ button shortly **(SW),** the record contents of both will be cleared.

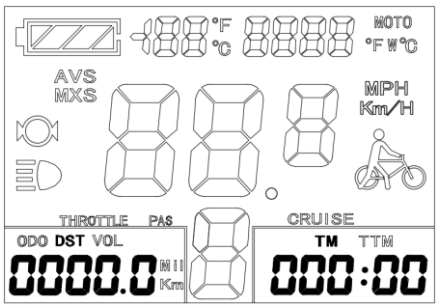

Single data clearing display

Under the status of data flashing, if there were no operations on the data within 5 seconds, the meter will automatically return to display1 after 5 seconds, and the original record content will be saved.

○ **Automatically Prompt Interface**

Error Code Display：

When the electronic control system of the electric vehicle fails, and the meter will automatically display (flicker) fault code. You can’t exit the fault code display only the fault is removed.

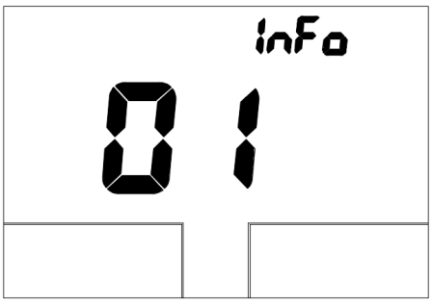

Error Code Display

Error Code & Definition Table：

Error Code	Definition
01__info	Throttle Abnormality
03__info	Motor Hall Signal Abnormality
04__info	Torque sensor Signal Abnormality
05__info	Axis speed sensor Abnormality(only applied to torque sensor)
06__info	Motor or controller has short circuit Abnormality

Motor operating temperature alarm：

Under any interface, when the motor operating temperature exceeds the warning value, the motor operating temperature display flashes to alarm, meanwhile, the controller will offer the appropriate protection to motor.

User Setting Project

KT-LCD10H meter user setting project：

◇ General project setting

◇ P parameter setting

◇ C parameter setting

◇ L parameter setting

General Project Setting

○ Maximum Trip Speed

Under power off status, hold button long **(SW)**, the meter is turned on. Within 5 seconds after boot-up, hold button **(UP)** and button **(DOWN)** simultaneously for about 2 seconds, the first is to enter the maximum riding speed setting interface, then the speed display column flashes. Press button **(UP)** or button **(DOWN)** in order to set the maximum riding speed value. **The default maximum riding speed value was 25Km/h.** When the speed of the electric vehicle exceeds the set value, the motor will be stopped driving.

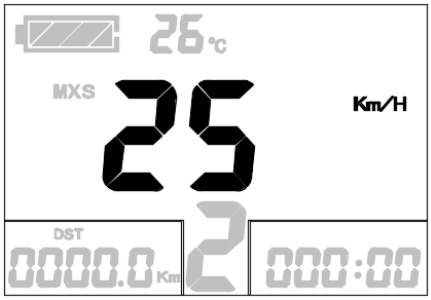

Setting interface of maximum trip speed

Under the setting maximum riding speed interface, if there's no button operation on the meter for more than 1 minute, and then the meter will automatically return to display 1, and the original set values will be saved.

After finishing the maximum riding speed setting, Press button **(SW)** to save the current set values and enter into the next setting.

○ **Wheel Diameter**

After finishing the maximum riding speed setting, enter the wheel diameter setting interface, and then the wheel diameter display column flashes. Press button **(UP)** or button **(DOWN)** to choose the corresponding wheel diameter specification to a selected vehicle. The selection range of wheel diameter specifications are 16 species such as 5,6,8,10,12,14,16,18,20,23,24,26,27.5,700C，28 and 29 inches.

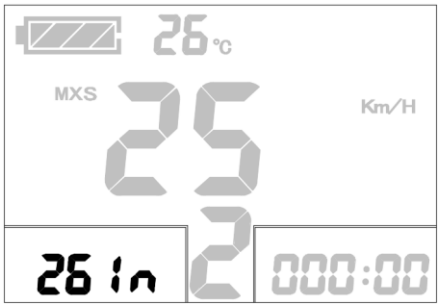

Setting Interface of Wheel Diameter

Under the wheel diameter setting interface, if there's no button operation on the meter for more than 1 minute, and then the meter will automatically return to display 1, and the original set values will be saved.

After finishing the wheel diameter setting, press button (**SW**) to save the

current set specification and enter into the next setting.

○ **Metric and Imperial Units**

After finishing the wheel diameter setting, enter into the metric/imperial units setting interface, and then the speed and mileage unit flash. Press button (**UP**) or button **(DOWN)** to make sync selection of three metric/imperial units as speed, mileage, and the environment temperature.

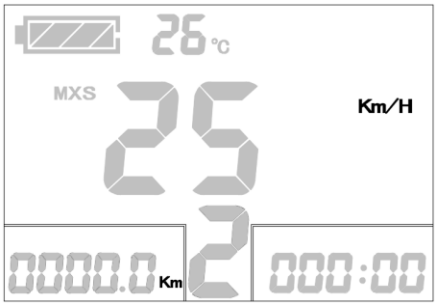

Setting Interface of Metric/Imperial Units

Definition Table of Metric/Imperial Units：

Display	Metric	Imperial
Riding speed	Km/H	MPH
Total distance	Km	Mil
Environment temperature	℃ Temperature	℉ Fahrenheit

Under the metric/imperial units setting interface, if there's no button operation on the meter for more than 1 minute, and then the meter will automatically return to display 1, and the original set units will be saved.

After finishing the metric/imperial units setting, press button **(SW)** to save the current set values, and then speed and mileage units stop flashing. Press button **(SW)** again, and the meter will enter into the maximum riding speed interface again, or hold button **(SW)** long for about 2 seconds to exit the general project setting environment and return to display 1.

○ **Exit General Project Setting**

Among the three general project settings, after each setting is completed, if hold button (SW) long for about 2 seconds, all can exit the setting environment and return to display 1, meanwhile, the current set parameters are saved.

Under each setting interface, if there's no button operation on the meter for more than 1 minute, and then the meter will automatically return to display 1, and the original set parameters will be saved.

P Parameter Setting

After finishing metric/imperial unit settings, the speed and mileage units stop flashing. Within one minute after stopping flashing, hold button **(UP)** and button **(DOWN)** simultaneously for about 2 seconds to enter P parameter setting environment.

○ P1 Motor Characteristic Parameter Setting

P1 is motor characteristic parameter setting, P1 = motor gear reduction ratio× number of rotor magnet pieces, just rounding if there's any decimal.

After entering P parameter setting environment, the first is to set P1parameter, P1 parameter column flashes. P1 setting ranges between1-255, press button (**UP**) or button (**DOWN**) for selection.

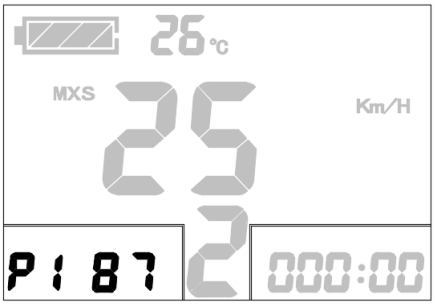

P1 parameter setting interface

Under P1 parameter setting interface, if there's no button operation on the meter for more than 1 minute, and then the meter will automatically return to display 1, and the original set parameter will be saved.

After finishing P1 parameter setting, Press button to save the current set values and enter P2 parameter setting interface.

○ **P2 Wheel Speed Pulse Signal Setting**

Enter P2 parameter setting interface, P2 parameter column flashes.

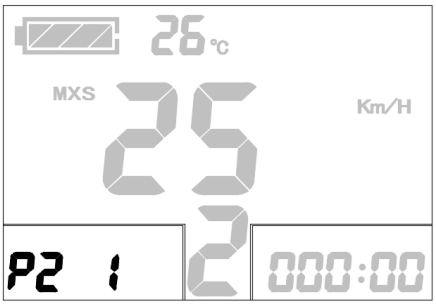

P2 parameter setting interface

P2 is wheel speed pulse signal setting, if wheel generated 1 pulse signal by a revolution, P2 should be set as1. If wheel generated 6 pulse signals by a revolution, P2 should be set as 6. If users didn't configure the pulse signal system, and then P2 parameter setting can be 0. The setting range of P2 should be between 0-6, press button (**UP**) or button **(DOWN)** for selection.

Under P2 parameter setting interface, if there's no button operation on the meter for more than 1 minute, and then the meter will automatically return to display 1, and the original set parameter will be saved.

After finishing P2 parameter setting, press button (**SW**) to save the current set values and enter P3 parameter setting interface.

Please Note: when P2 parameter is set to be 0, for the built-in clutch motor, there will be the following defects, when the internal motor rotors stop or the internal rotor speed is lower than the outer rotor speed, then the speed displayed on the meter is inaccurate!

○ **P3 Power Assist Control Mode Setting**

Enter P3 parameter setting interface, P3 parameter column flashes.

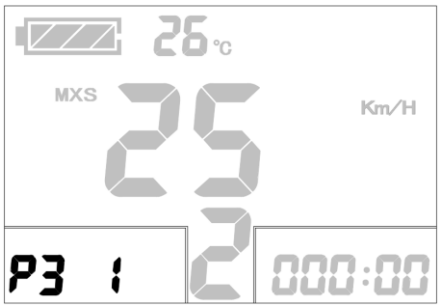

P3 parameter setting interface

P3 is power assist control mode setting, when P3 parameter setting is1, power assist control mode is gear 5 of "**imitation torque control**" mode, when P3 parameter setting is 0, power assist control mode is gear 5 of "**speed control**" mode. P3 parameter needs to be determined according to the distributed function of the controller, its setting range is 0 or 1, press button **(UP)** or button **(DOWN)** for selection. P3 parameter setting method is the same to that of P2.

○ **P4 Handlebar Startup Setting**

Enter P4 parameter setting interface, P4 parameter column flashes.

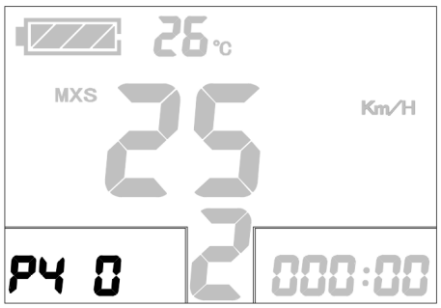

P4 parameter setting interface

P4 is handlebar startup setting, when P4 setting is 1, indicating the handlebar is under "**non-zero startup**" mode, namely, the handlebar can be effective only after startup the foot power assist. When P4 setting is 0, indicating the handlebar is under "**zero startup**" mode, the motor can be startup by the handlebar directly. P4 setting range is 0 or 1, press button (**UP**) or button **(DOWN)** for selection. P4 parameter setting method is the same to that of P2.

○ **P5 Power Monitoring Setting**

Enter P5 parameter setting interface, P5 parameter column flashes.

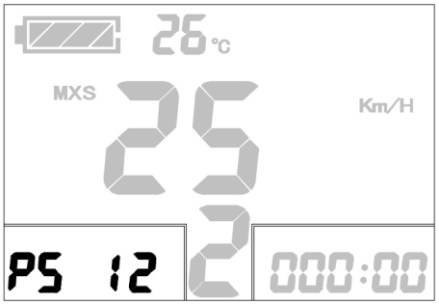

P5 parameter setting interface

P5 is power monitoring setting, when P5 setting is 0, the power monitoring is the "**real-time voltage**" mode. Namely, it is the method to determine the battery capacity based on real-time battery voltage. When P5 equals to a specified parameter, the power monitoring is the "**smart power**" mode (this parameter is determined by the battery characteristics, ordinary 24V lithium is generally is 4-11, 36V lithium is between 5_15). P5 setting ranges from 0-40, press button (**UP**) or button **(DOWN)** for selection. P 5 parameter setting method is the same to that of P2.

After finishing P5 parameter setting, press button (**SW**) to save current set the values, and then P5 parameter column stops flashing. Press button (**SW**) again, the meter re-enter P1 parameter setting interface. Or hold button (**SW**) for about 2 seconds to exit P parameter setting environment and return to the display 1.

○ **Exit P Parameter Setting**

Among the five P parameter settings, when each parameter setting is completed, if hold button (**SW**) for about 2 seconds, all can exit the setting environment and return to display 1, meanwhile, the current set parameters would be saved.

Under each parameter setting interface, if there’s no button operation on the meter for more than 1 minute, and then the meter will automatically return to display 1, and the original set parameters will be saved.

C Parameter Setting

After finishing P5 parameter setting, P5 parameter column stops flashing. Within 1 minute after stopping flashing, hold button **(UP)** and button **(DOWN)** for

about 2 seconds to enter C parameter setting environment.

○ **C1 Power-Assist Sensor and Parameter Select Setting**

Set C1 parameter first after entering C parameter setting environment, C1 parameter column flashes.

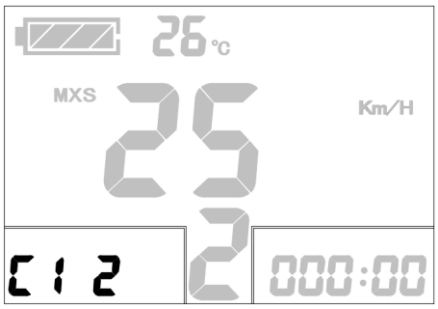

C1 parameter setting interface

C1 is power-assist sensor and parameter select setting, its definition is shown in following table. C1 setting ranges between 0-7, press button **(UP)** or button (**DOWN**) for selection.

C1 parameter definition table：

KUNTENG power assist sensors	C1 value	Start Sensitivity	KUNTENG V12 power assist sensors	C1 value	Start Sensitivity
Forward 5 Signal	00	Standard	Reverse 6 Signal	05	Standard
	01	Lower		06	Lower
	02	Lowest		07	Lowest
Forward 8 Signal	00	Higher	Reverse 10 Signal	05	Higher
	01	Standard		06	Standard
	02	Lower		07	Lower
Forward 10 Signal	00	Highest	Reverse 12 Signal	05	Highest
	01	Higher		06	Higher
	02	Standard		07	Standard

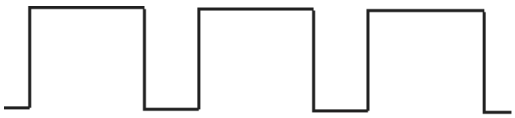

Forward power sensor signal waveforms

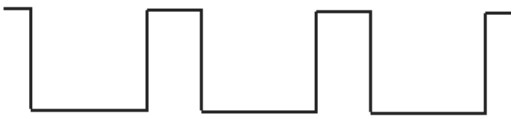

Reverse power sensor signal waveforms

After finishing C1 parameter setting, press button (**SW**) to save the current set values and enter C2 parameter setting interface.

○ **C2 Motor Phase Classification Coding Setting**

Enter C2 parameter setting interface, C2 parameter column flashes.

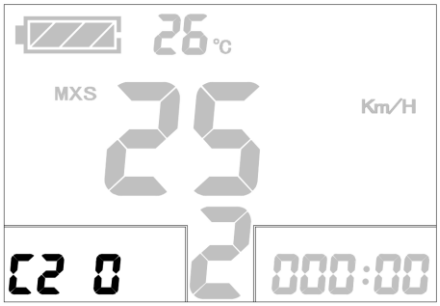

C2 parameter setting interface

C2 is motor phase classification coding setting, it is served as identification parameter of different phases of the motor when using sine wave drive and the default value is 0. When C2 setting is 0, indicating that the used Quantum motor phase is an ordinary one. When the setting is a certain value, indicating a particular motor phase is used. C2 setting range is 0-1, press button **(UP)** or button (**DOWN**) for selection.

After finishing C2 parameter setting, press button (**SW**) to save the current set values and enter C3 parameter setting interface.

○ **C3 Power Assist Ratio Gear Initialization Setting**

Enter C3 parameter setting interface, C3 parameter column flashes.

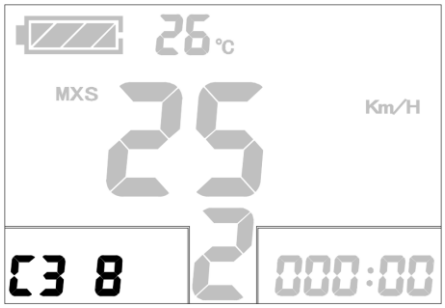

C3 parameter setting interface

Press button **(UP)** or button **(DOWN)** for selection C3 parameter values. The factory default is 8.

C3 parameter values：

C3	Parameter value meaning

0	The meter is powered on and the power assist ratio is at gear 0.
1	The meter is powered on and the power assist ratio is at gear 1.
2	The meter is powered on and the power assist ratio is at gear 2.
3	The meter is powered on and the power assist ratio is at gear 3.
4	The meter is powered on and the power assist ratio is at gear 4.
5	The meter is powered on and the power assist ratio is at gear 5.
6&7	Retain
8	Each startup will automatically restore the gear shutdown last time.

After finishing C3 parameter setting, press button (**SW**) to save the current set values and enter C4 parameter setting interface.

○ **C4 Handlebar Function Setting**

Enter C4 parameter setting interface,C4 parameter column flashes.

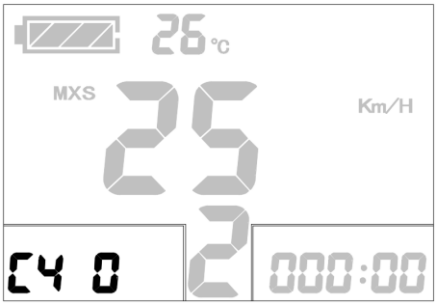

C4 parameter setting interface

C4 is handlebar function setting, the setting range is 0-4, press button **(UP)** or button (**DOWN**) for selection.

C4 parameter definition table：

C4 value	P4=0	P4=1
0	zero startup handlebar	Non-zero startup handlebar
1	Zero startup, handlebar speed limit is 6Km/h	Before power assist, the handlebar speed limit is 6Km/h, after power assist, handlebar is full speed.
2	Zero startup, handlebar speed limit is specified	Non-zero startup, handlebar is specified speed limit.

3	Zero startup, Zero gear effectively	Before power assist, the handlebar speed limit is 6Km/h, after power assist, handlebar is full speed. Stop power assist, return the handlebar speed limit is 6Km/h.
4	Handlebar gears is distinguished according to the display meter.	Non-zero startup handlebar, Handlebar gears is distinguished according to the display meter.
5	Retain	Retain

When C4 = 2 is confirmed, "specified speed limit value of handlebar" flashes, press (UP) button or (DOWN) button for short to make selection, and the default value is 20.

When C4 = 4 is confirmed, the "percentage value of the first gear speed accounts for its full speed" of the power assist gear flashes, press (UP) button or (DOWN) button for short to make selection, and the default value is 50%. The percentage values of other gears divide automatically in equal.

After finishing C4 parameter setting, press button (SW) to save the current set values and enter C5 parameter setting interface.

○ **C5 Controller Maximum Current Adjustment Setting**

Enter C5 parameter setting interface, C5 parameter column flashes.

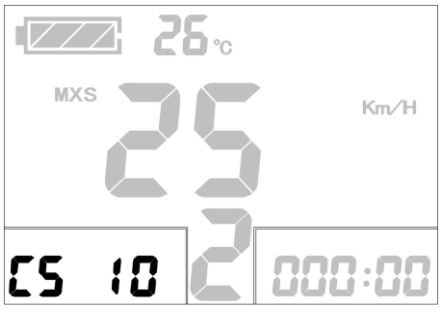

C5 parameter setting interface

C5 is controller maximum operating current adjustment setting(tiny-adjustment of limit current value), the default value is 10, setting range is 0-10,press button (**UP**) or button **(DOWN)** for selection.

C5 parameter definition table：

C5 value	Maximum current value(A)
00	Three level slow start/ Maximum current value
01	Two level slow start/ Maximum current value
02	One level slow start/ Maximum current value
03	Maximum current value÷2.00
04	Maximum current value÷1.50
05	Maximum current value÷1.33
06	Maximum current value÷1.25
07	Maximum current value÷1.20
08	Maximum current value÷1.15
09	Maximum current value÷1.10
10	Maximum current value

When C5 setting is 10, maximum current value is controller maximum operating current value (ie, limit current value); when setting is 9, maximum current value divided by 1.10, when setting is 8, maximum current value divided by 1.15 and so on.

After finishing C5 parameter setting, press button **(SW)** to save the current set values and enter C6 parameter setting interface.

○ **C6 Backlight Brightness Adjustment Setting**

Enter C6 parameter setting interface, C6 parameter column flashes.

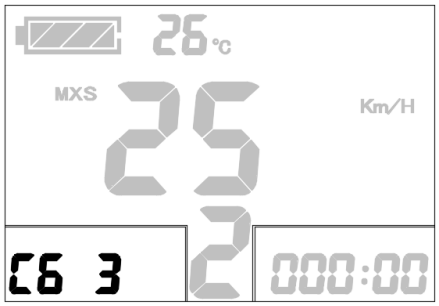

C6 parameter setting interface

C6 is the meter backlight brightness adjustment setting, the default value is 3, and setting range is 1-5, press button **(UP)** or button **(DOWN)** for selection.

C6 parameter definition table：

C6 value	Backlight brightness
1	Dimmest
2	Darker
3	Standard
4	Brighter
5	Brightest

After finishing C6 parameter setting, press button **(SW)** to save the current set values and enter C7 parameter setting interface.

○ **C7 Cruise Function Setting**

Enter C7 parameter setting interface, C7 parameter column flashes.

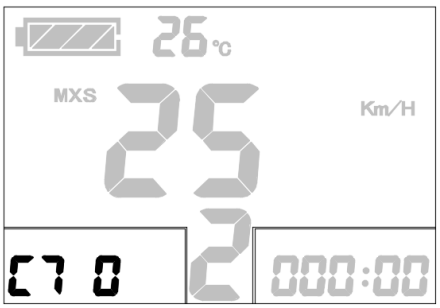

C7 parameter setting interface

C7 is cruise function setting, the setting range is 0 or 1, press button **(UP)** or button **(DOWN)** for selection.

C7 parameter definition table：

C7 value	Cruise function
0	Off
1	On

After finishing C7 parameter setting, press button **(SW)** to save the current set values and enter C8 parameter setting interface.

○ **C8 Motor Operating Temperature Display Setting**

Enter C8 parameter setting interface, C8 parameter column flashes.

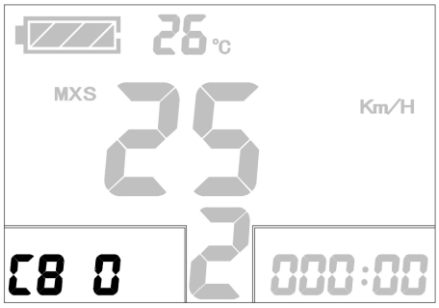

C8 parameter setting interface

C8 is motor operating temperature display setting, the setting range is 0 or 1, press button **(UP)** or button **(DOWN)** for selection.

C8 parameter definition table：

C8 value	Motor operating temperature
0	Function off
1	Function on

Please Note： The motor operating temperature display requires installing temperature sensor in the motor, output temperature detection signal simultaneously.

After finishing C8 parameter setting, press button **(SW)** to save the current set values and enter C9 parameter setting interface.

○ **C9 Startup Password Setting**

Enter C9 parameter setting interface, C9 parameter column flashes.

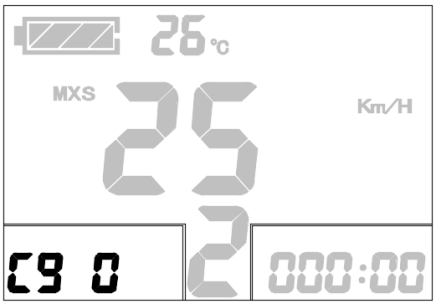

C9 parameter setting interface

C9 is meter power-on password setting, the default value is 0, press button **(UP)** or button **(DOWN)** for selection.

C9 parameter definition table：

C9 value	Startup password setting
0	Function off
1	Function on

When C9 setting is 1, press button **(SW)**, indicating that the password function is startup, and then enter the password settings interface, three password setting columns flash.

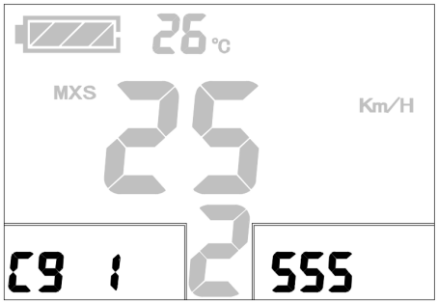

Password Setting Interface

The password setting is done sequentially from left to right, press button to confirm after each setting and enter next setting. Password setting range is 000-999, press button **(UP)** or button **(DOWN)** for selection.

Please note: If you forget your password, the parameters can only be copied (see parameter copy) by data source meter prier to be decoded.

After finishing C9 parameter setting, press button (SW) to save the current set values and enter C10 parameter setting interface.

○ **C10 Automatically Restore Factory Setting**

Enter C10 parameter setting interface, C10 parameter column flashes.

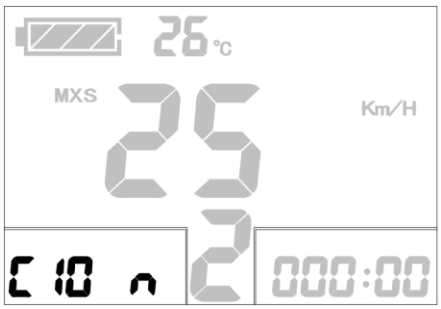

C10 parameter setting interface

C10 is automatic restore factory settings, the default is n, and the setting can be n, or y,

press button **(UP)** or button **(DOWN)** for selection.

C10 parameter definition table：

C10 value	Restore default setting
n	Function off
y	Function on

When the meter is needed to restore default setting, C10 selects y, hold button for about 2 seconds, all parameters restore default settings and exit setting environment, and then return to the display1.

C10 selects n, press button **(SW)** to save the current set values and enter C11 parameter setting interface.

○ **C11 Meter Attribute Selection Setting**

Enter C11 parameter setting interface, C11 parameter column flashes.

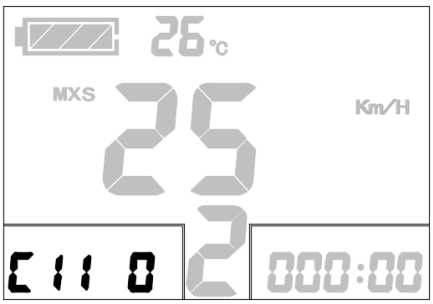

C11 parameter setting interface

C11 is meter attribute selection setting, the setting range is 0-2, press button **(UP)** or button **(DOWN)** for selection.

C11 parameter definition table：

C11 value	Meter Attribute
0	Meter uses LCD3 new version of communication protocol, it is compatible LCD1 and LCD2.
1	Meter uses LCD1 and LCD2 old version communication protocol, it is not compatible second display.

2	As data source for copying parameters, the meter transfers to second display.

C11 selects 2, hold (SW) for about 2 seconds to exit the setting environment, and then the meter is served as data source for copying parameter (see parameter copy), there's So 2 logo on display interface.

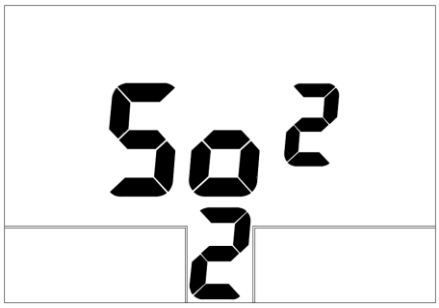

Data Source Display Interface

After finishing C11 parameter setting, press button **(SW)** to save the current set values and enter C12 parameter setting interface.

○ **C12 Controller Minimum Voltage Adjustment Setting**

Enter C12 parameter setting interface, C12 parameter column flashes.

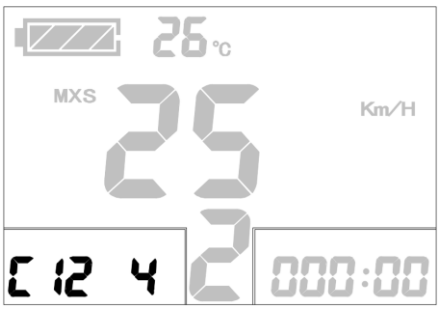

C12 parameter setting interface

C12 is controller minimum operating voltage adjustment setting (tiny adjustment of voltage shortage), the default value is 4, and the setting range is 0-7, press button **(UP)** or button **(DOWN)** for selection.

C12 parameter definition table：

C12 value	Minimum Voltage(V)		
	24V Controller	36VController	48VController
0	Default value-2V	Default value-2V	Default value-2V

1	Default value-1.5V	Default value-1.5V	Default value-1.5V
2	Default value-1V	Default value-1V	Default value-1V
3	Default value-0.5V	Default value-0.5V	Default value-0.5V
4	**Default value 20V**	**Default value 30V**	**Default value 40V**
5	Default value+0.5V	Default value+0.5V	Default value+0.5V
6	Default value+1V	Default value+1V	Default value+1V
7	Default value+1.5V	Default value+1.5V	Default value+1.5V

C12 default value is 4, namely, controller minimum operating voltage (voltage shortage value); when setting is 5, the default value plus 0.5V, when setting is 4, the default value minus 0.5Vand so on.

After finishing C12 parameter setting, press button **(SW)** to save the current set values and enter C13 parameter setting interface.

○ **C13 ABS brakes of the controller and parameters of anti-charge control Setting**

Enter into C13 parameter setting interface, C13 parameter bar flashes.

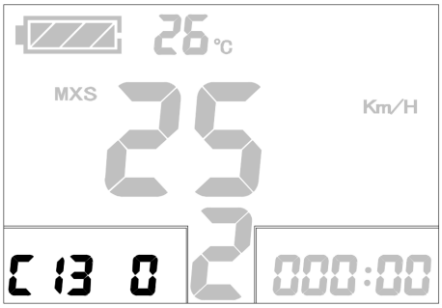

C13 parameter setting interface

C13 is ABS brakes of the controller and parameters of anti-charge control setting, the default value is 0 with the setting range between 0-5, press (UP) button or (DOWN) button to make selection.

C13 parameter definition table:

C13 Value	ABS braking strength	Energy recovery efficiency
0	None	None
1	Class 1 braking strength	Best energy recovery efficiency
2	Class2 braking strength	General energy recovery efficiency
3	Class 3 braking strength	Weaker energy recovery efficiency
4	Class4 braking strength	Poor energy recovery efficiency
5	Class5 braking strength	Bad energy recovery efficiency

The recommended value of C13 is 1; other values need to be chosen with caution for use.

Be sure to note:

1. the higher is the braking intensity level, and the braking strength will be greater, the greater damage to the motor shaft accordingly.

2. If the battery has a BMS function, disable this function.

After finishing the parameter setting of C13, press (SW) button for short to enter C14 parameter setting interface.

○ **C14 Power-assist tuning parameters Setting**

Enter into C14 parameter setting interface, C14 parameter bar flashes.

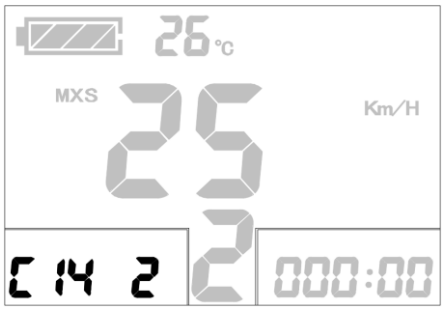

C14 parameter setting interface

C14 is the parameters of power-assist tuning setting, with the default value of 2. The power-assist is between1-4 gear, and it is invalid until P3 equals to 1. The setting range 1-3, and press (UP) button or (DOWN) button for short to make selection.

C14 parameter definition table:

C14 Value	Assist strength of intelligent pedal motor

1	Weak assist strength of motor
2	General assist strength of motor
3	Stronger assist strength of motor

After finishing C14 parameter setting, hold button **(SW)** shortly to save the current set values and enter C15 parameter setting interface.

○ **C15 Push-assist Speed Parameters Setting**

Enter C15 parameters setting interface, C15 flashes.

C15 is the setting of push-assist speed, default value is 6, range from 4-6, press (UP) button or (DOWN) button to choose

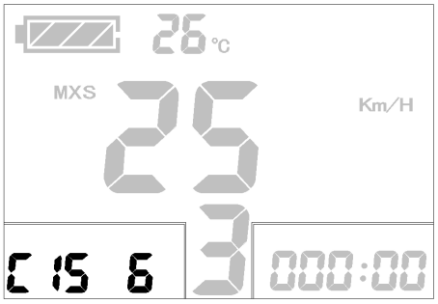

C15 parameters

C15valte	Push-assist speed
4	4Km/H
5	5Km/H
6	6Km/H

After finishing C15 parameter setting, hold button **(SW)** shortly to save current set values and enter C1 parameter setting interface again. Or hold button **(SW)** long for about 2 seconds to exit C parameter setting environment and return to the display 1. Or hold button **(UP)** and button **(DOWN)** at the same time to enter L parameter setting.

○ **Exit Parameter Setting**

Under each parameter setting interface, if there's no button operation on the meter for more than 1 minute, and then the meter will automatically return to display 1, and the original parameters will be saved.

L Parameter Setting

○ L1 Parameter setting

L1 parameters are applicable to the automatic under-voltage controller. The default of the factory is 0.

When L1=0, the automatic under-voltage controller can automatically select the under-voltage value according to the battery voltage.

When L1=1, the under-voltage value of the automatic under-voltage controller is forced to be 20V.

When L1 = 2, the under-voltage value of the automatic under-voltage controller is forced to be 30V.

When L1 = 3, the under-voltage value of the automatic under-voltage controller is forced to be 40V.

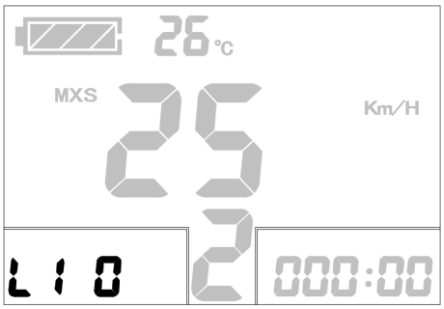

After finishing L1 parameter setting, press button (**SW**) to save the current value and then enter L2 parameter setting interface.

○ L2 Parameter setting

L2 parameter is suitable for the super high-speed motor controller. The default of the factory is 0.

L2 parameter will be activated when the value of P1 parameter exceeds 255. L2 parameter should use in combination with P1.

When L2=0, P1 parameter is set as the calculated value.

When L2=1, P1 parameter is set as a half of the calculated value.

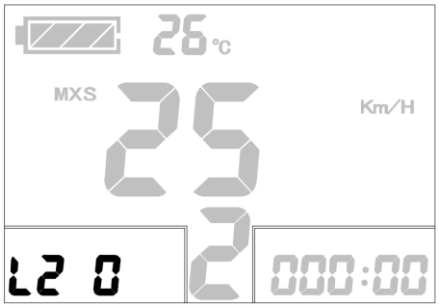

After finishing L2 parameter setting, press button (**SW**) to save the current value and then enter L3 parameter setting interface.

○ **L3 Parameter setting**

L3 parameter is applicable to the dual mode controller. The default of the factory is 1.

When L3=0, the controller will activate Non-Hall model only when the Hall sensor in the motor fails

When L3=1, the controller will choose the proper model to use according to the controller system optimization.

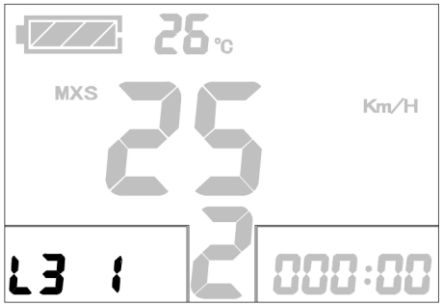

After finishing L3 parameter setting, hold button **(SW)** for about 2 seconds to exit L parameter setting environment and return to the display 1

○ **Exit Parameter Setting**

Among the fourteen C parameter settings, when each parameter setting is completed, if held button (**SW**) long for about 2 seconds, all can exit the setting environment and return to display 1, meanwhile, the current set parameters would be saved.

Under each parameter setting interface, if there's no button operation on the meter for more than 1 minute, and then the meter will automatically return to display 1, and the original set parameters will be saved.

Parameter Copy

Set parameters (include general project parameter, P parameter and C parameter) of all KT-LCD10H meter produced by our company according to requirements, and set the meter to be a data source according to the method of **"C11 meter attribute selection setting".**

Use special wiring cables to properly wire to LCD10H meter needs to be copied according to the diagram.

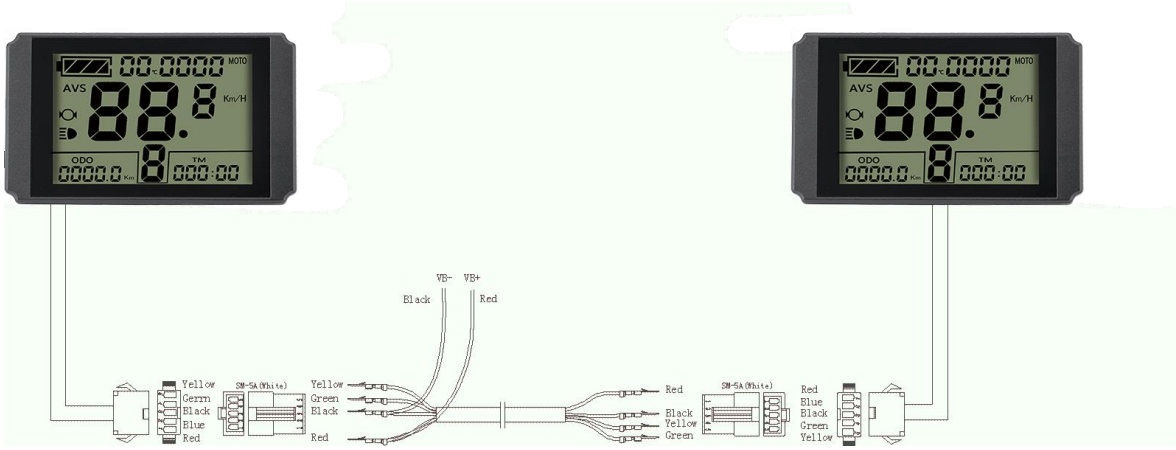

Meter parameter copy wiring diagram

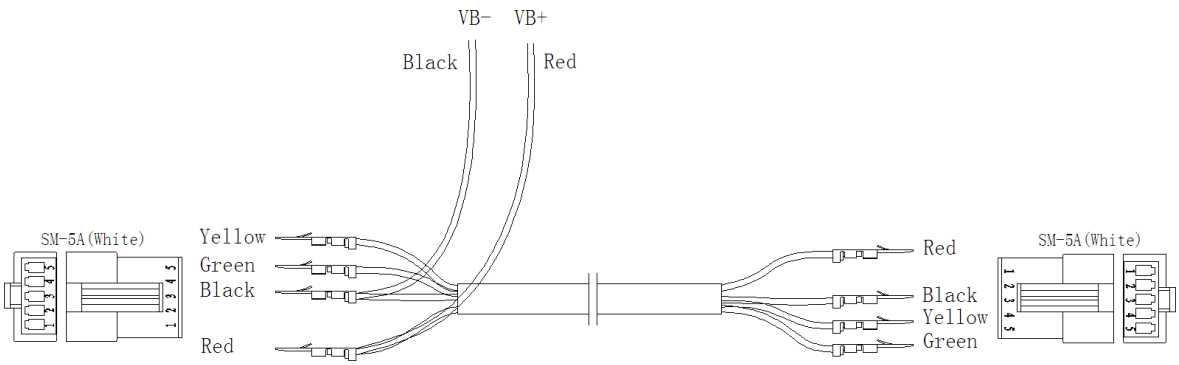

Special wiring cable

Turn on meter power supply of data source. Power supply of 48V or 36V or 24V is

available (VB + positive power supply). After wiring the meter needs to be copied, hold button long till meter is startup. Within 5 seconds after startup, hold button (**UP**) and button (**DOWN**) simultaneously for about 2 seconds, meter parameter copy is completed. If the copy operation is correct, the meter subject to be copied will display as follow.

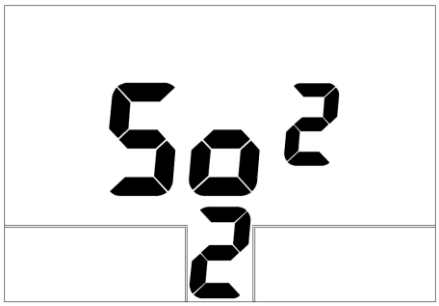

Interface of finishing parameter copy

Please note: Both C9 power-on password and C11 meter attributes can't be copied. Besides, LCD10H meter can only copy parameter of the same meter model.

User Setting Note

After entering the user setting environment, if there's no button operation on the data for more than 1 minute, the meter will automatically return to display1, and the new set parameters won't be saved.

The factory parameter set value and the default value of the meter can be set according to user requirements, the meter parameter can be restored by using **"C10 automatically restore factory setting "** approach when adjusting it.

Version Information

KT_LCD10H_V2.0
Released on June 21, 2022