MAX 10 FPGA Configuration User Guide

Subscribe

Send Feedback

UG-M10CONFIG
2015.06.15

101 Innovation Drive
San Jose, CA 95134
www.altera.com

Contents

MAX 10 FPGA Configuration Overview..... 1-1

MAX 10 FPGA Configuration Schemes and Features..... 2-1
Configuration Schemes..... 2-1
JTAG Configuration..... 2-1
Internal Configuration..... 2-2
Configuration Features..... 2-8
Remote System Upgrade in Dual Compressed Images..... 2-8
Configuration Design Security..... 2-15
SEU Mitigation and Configuration Error Detection..... 2-18
Configuration Data Compression..... 2-22
Configuration Details..... 2-23
Configuration Sequence..... 2-23
MAX 10 Configuration Pins..... 2-25

MAX 10 FPGA Configuration Design Guidelines..... 3-1
Dual-Purpose Configuration Pins..... 3-1
Guidelines: Dual-Purpose Configuration Pin..... 3-1
Enabling Dual-purpose Pin..... 3-2
Configuring MAX 10 Devices using JTAG Configuration..... 3-2
JTAG Configuration Setup..... 3-3
ICB Settings in JTAG Configuration..... 3-4
Configuring MAX 10 Devices using Internal Configuration..... 3-4
Selecting Internal Configuration Modes..... 3-5
.pof and ICB Settings..... 3-5
Programming .pof into Internal Flash..... 3-7
Accessing the Remote System Upgrade Block Through User Interface..... 3-7
Error Detection..... 3-8
Verifying Error Detection Functionality..... 3-8
Enabling Error Detection..... 3-8
Accessing Error Detection Block Through User Interface..... 3-9
Enabling Data Compression..... 3-10
Enabling Compression Before Design Compilation..... 3-10
Enabling Compression After Design Compilation..... 3-10
AES Encryption..... 3-11
Generating .ekp File and Encrypt Configuration File..... 3-11
Generating .jam/.jbc/.svf file from .ekp file..... 3-12
Programming .ekp File and Encrypted POF File..... 3-13
Encryption in Internal Configuration..... 3-14

MAX 10 FPGA Configuration IP Core Implementation Guides..... 4-1
Altera Unique Chip ID IP Core..... 4-1
Instantiating the Altera Unique Chip ID IP Core..... 4-1
Resetting the Altera Unique Chip ID IP Core..... 4-1
Altera Dual Configuration IP Core..... 4-1
Instantiating the Altera Dual Configuration IP Core..... 4-2

Altera Dual Configuration IP Core References.....5-1
Altera Dual Configuration IP Core Avalon-MM Address Map.....5-1
Altera Dual Configuration IP Core Parameters..... 5-3

Altera Unique Chip ID IP Core References.....6-1
Altera Unique Chip ID IP Core Ports.....6-1

Additional Information for MAX 10 FPGA Configuration User Guide..... A-1
Document Revision History for MAX 10 FPGA Configuration User Guide.....A-1

MAX 10 FPGA Configuration Overview

1

2015.06.15

UG-M10CONFIG Subscribe Send Feedback

You can configure MAX® 10 configuration RAM (CRAM) using the following configuration schemes:

- JTAG configuration—using JTAG interface.
- Internal configuration—using internal flash.

Supported Configuration Features

Table 1-1: Configuration Schemes and Features Supported by MAX 10 Devices

Configuration Scheme	Remote System Upgrade	Compression	Design Security	SEU Mitigation
JTAG configuration	—	—	—	Yes
Internal configuration	Yes	Yes	Yes	Yes

Related IP Cores

- Altera Dual Configuration IP Core—used in the remote system upgrade feature.
- Altera Unique Chip ID IP Core—retrieves the chip ID of MAX 10 devices.

Related Information

- **MAX 10 FPGA Configuration Schemes and Features** on page 2-1
  Provides information about the configuration schemes and features.
- **MAX 10 FPGA Configuration Design Guidelines** on page 3-1
  Provides information about using the configuration schemes and features.
- **Altera Unique Chip ID IP Core** on page 2-16
- **Altera Dual Configuration IP Core** on page 2-14

© 2015 Altera Corporation. All rights reserved. ALTERA, ARRIA, CYCLONE, ENPIRION, MAX, MEGACORE, NIOS, QUARTUS and STRATIX words and logos are trademarks of Altera Corporation and registered in the U.S. Patent and Trademark Office and in other countries. All other words and logos identified as trademarks or service marks are the property of their respective holders as described at www.altera.com/common/legal.html. Altera warrants performance of its semiconductor products to current specifications in accordance with Altera's standard warranty, but reserves the right to make changes to any products and services at any time without notice. Altera assumes no responsibility or liability arising out of the application or use of any information, product, or service described herein except as expressly agreed to in writing by Altera. Altera customers are advised to obtain the latest version of device specifications before relying on any published information and before placing orders for products or services.

ISO 9001:2008 Registered

101 Innovation Drive, San Jose, CA 95134

MAX 10 FPGA Configuration Schemes and Features

2

2015.06.15

UG-M10CONFIG Subscribe Send Feedback

Configuration Schemes

Figure 2-1: High-Level Overview of JTAG Configuration and Internal Configuration for MAX 10 Devices

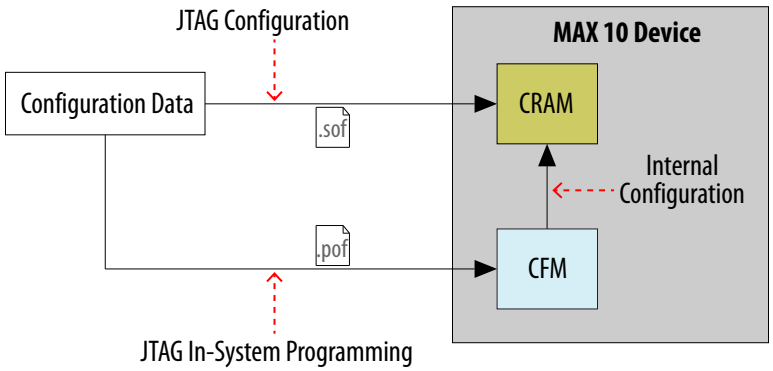

JTAG Configuration

In MAX 10 devices, JTAG instructions take precedence over the internal configuration scheme.

Using the JTAG configuration scheme, you can directly configure the device CRAM through the JTAG interface—`TDI`, `TDO`, `TMS`, and `TCK` pins. The Quartus® II software automatically generates an SRAM Object File (**.sof**). You can program the **.sof** using a download cable with the Quartus II software programmer.

Related Information

Configuring MAX 10 Devices using JTAG Configuration on page 3-2
Provides more information about JTAG configuration using download cable with Quartus II software programmer.

© 2015 Altera Corporation. All rights reserved. ALTERA, ARRIA, CYCLONE, ENPIRION, MAX, MEGACORE, NIOS, QUARTUS and STRATIX words and logos are trademarks of Altera Corporation and registered in the U.S. Patent and Trademark Office and in other countries. All other words and logos identified as trademarks or service marks are the property of their respective holders as described at www.altera.com/common/legal.html. Altera warrants performance of its semiconductor products to current specifications in accordance with Altera's standard warranty, but reserves the right to make changes to any products and services at any time without notice. Altera assumes no responsibility or liability arising out of the application or use of any information, product, or service described herein except as expressly agreed to in writing by Altera. Altera customers are advised to obtain the latest version of device specifications before relying on any published information and before placing orders for products or services.

ISO 9001:2008 Registered

101 Innovation Drive, San Jose, CA 95134

JTAG Pins

Table 2-1: JTAG Pin

Pin	Function	Description
TDI	Serial input pin for: • instructions • test data • programming data	• TDI is sampled on the rising edge of TCK • TDI pins have internal weak pull-up resistors.
TDO	Serial output pin for: • instructions • test data • programming data	• TDO is sampled on the falling edge of TCK • The pin is tri-stated if data is not shifted out of the device.
TMS	Input pin that provides the control signal to determine the transitions of the TAP controller state machine.	• TMS is sampled on the rising edge of TCK • TMS pins have internal weak pull-up resistors.
TCK	Clock input to the BST circuitry.	—

All the JTAG pins are powered by the V_{CCIO} 1B. In JTAG mode, the I/O pins support the LVTTL/LVCMOS 3.3-1.5V standards.

Related Information

- **MAX 10 Device Datasheet**
  Provides more information about supported I/O standard in MAX 10 devices.
- **Guidelines: Dual-Purpose Configuration Pin** on page 3-1
- **Enabling Dual-purpose Pin** on page 3-2

Internal Configuration

You need to program the configuration data into the configuration flash memory (CFM) before internal configuration can take place. The configuration data to be written to CFM will be part of the programmer object file (**.pof**). Using JTAG In-System Programming (ISP), you can program the **.pof** into the internal flash.

During internal configuration, MAX 10 devices load the CRAM with configuration data from the CFM.

Internal Configuration Modes

The internal configuration scheme for all MAX 10 devices except for 10M02 device consists of the following modes:

- Dual Compressed Images—configuration image is stored as image 0 and image 1 in the CFM
- Single Compressed Image
- Single Compressed Image with Memory Initialization
- Single Uncompressed Image
- Single Uncompressed Image with Memory Initialization

In dual compressed images mode, you can use the CONFIG_SEL pin to select the configuration image.

The internal configuration scheme for 10M02 device supports the following mode:

- Single Compressed Image
- Single Uncompressed Image

Related Information

- **Configuring MAX 10 Devices using Internal Configuration** on page 3-4
- **Remote System Upgrade in Dual Compressed Images** on page 2-8

Configuration Flash Memory

The CFM is a non-volatile internal flash that is used to store configuration images. The CFM may store up to two compressed configuration images, depending on the compression and the MAX 10 devices. The compression ratio for the configuration image should be at least 30% for the device to be able store two configuration images.

Table 2-2: Maximum Number of Compressed Configuration Image for MAX 10 Devices

Device	Maximum Number of Compressed Configuration Image
10M02	1
10M04, 10M08, 10M16, 10M25, 10M40, and 10M50	2

Related Information

Configuration Flash Memory Permissions on page 2-18

Configuration Flash Memory Sectors

All CFM in MAX 10 devices consist of three sectors, CFM0, CFM1, and CFM2 except for the 10M02. The sectors are programmed differently depending on the internal configuration mode you select.

The 10M02 device consists of only CFM0. The CFM0 sector in 10M02 devices is programmed similarly when you select single compressed image or single uncompressed image.

Figure 2-2: Configuration Flash Memory Sectors Utilization for all MAX 10 Devices Except for the 10M02 Device

Unutilized CFM1 and CFM2 sectors can be used for additional user flash memory (UFM).

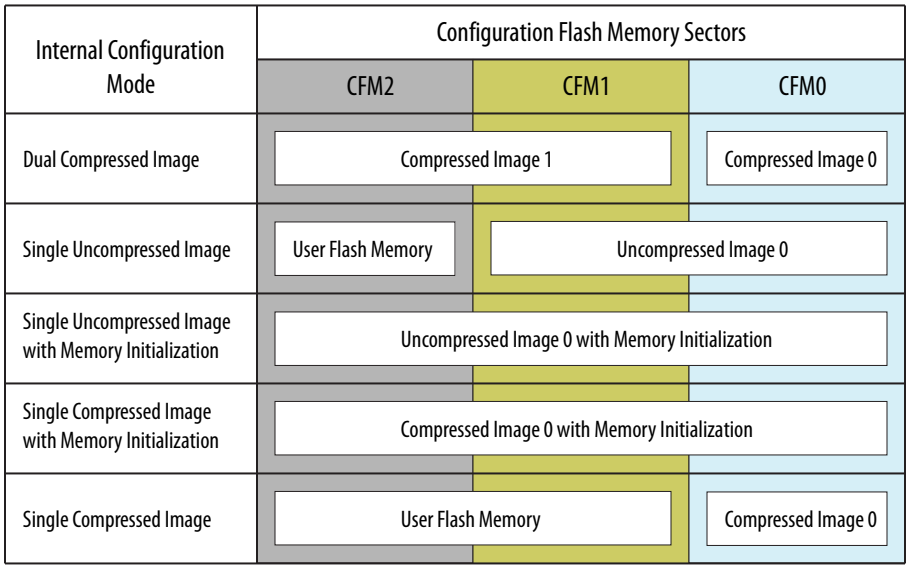

Related Information

CFM and UFM Array Size

Configuration Flash Memory Total Programming Time

Table 2-3: Configuration Flash Memory Total Programming Time for Sectors in MAX 10 Devices

Device	Programming Time (s)		
	CFM2	CFM1	CFM0
10M02	—	—	5.4
10M04	6.5	4.6	11.1
10M08	12.0	8.9	20.8
10M16 and 10M25	16.4	12.6	29.0
10M40 and 10M50	30.2	22.7	52.9

In-System Programming

You can program the internal flash including the CFM of MAX 10 devices with ISP through industry standard JTAG interface. ISP offers the capability to program, erase, and verify the CFM. The JTAG circuitry and ISP instructions for MAX 10 devices are compliant to the IEEE-1532-2002 programming specification.

During ISP, the MAX 10 receives the IEEE Std. 1532 instructions, addresses, and data through the `TDI` input pin. Data is shifted out through the `TDO` output pin and compared with the expected data.

The following are the generic flow of an ISP operation:

1. Check ID—the JTAG ID is checked before any program or verify process. The time required to read this JTAG ID is relatively small compared to the overall programming time.
2. Enter ISP—ensures the I/O pins transition smoothly from user mode to the ISP mode.
3. Sector Erase—shifting in the address and instruction to erase the device and applying erase pulses.
4. Program—shifting in the address, data, and program instructions and generating the program pulse to program the flash cells. This process is repeated for each address in the internal flash sector.
5. Verify—shifting in addresses, applying the verify instruction to generate the read pulse, and shifting out the data for comparison. This process is repeated for each internal flash address.
6. Exit ISP—ensures that the I/O pins transition smoothly from the ISP mode to the user mode.

You can also use the Quartus II Programmer to program the CFM.

Related Information

Programming .pof into Internal Flash on page 3-7
Provides the steps to program the .pof using Quartus II Programmer.

Real-Time ISP

In a normal ISP operation, to update the internal flash with a new design image, the device exits from user mode and all I/O pins remain tri-stated. After the device completes programing the new design image, it resets and enters user mode.

The real-time ISP feature updates the internal flash with a new design image while operating in user mode. During the internal flash programming, the device continues to operate using the existing design. After the new design image programming process completes, the device will not reset. The new design image update only takes effect in the next reconfiguration cycle.

ISP and Real-Time ISP Instructions

Table 2-4: ISP and Real-Time ISP Instructions for MAX 10 Devices

Instruction	Instruction Code	Description
`CONFIG_IO`	`00 0000 1101`	• Allows I/O reconfiguration through JTAG ports using the IOCSR for JTAG testing. This is executed after or during configurations. • `nSTATUS` pin must go high before you can issue the `CONFIG_IO` instruction.
`PULSE_NCONFIG`	`00 0000 0001`	Emulates pulsing the `nCONFIG` pin low to trigger reconfiguration even though the physical pin is unaffected.

Instruction	Instruction Code	Description
ISC_ENABLE_HIZ [1]	10 1100 1100	• Puts the device in ISP mode, tri-states all I/O pins, and drives all core drivers, logic, and registers. • Device remains in the ISP mode until the ISC_DISABLE instruction is loaded and updated. • The ISC_ENABLE instruction is a mandatory instruction. This requirement is met by the ISC_ENABLE_CLAMP or ISC_ENABLE_HIZ instruction.
ISC_ENABLE_CLAMP [1]	10 0011 0011	• Puts the device in ISP mode and forces all I/O pins to follow the contents of the JTAG boundary-scan register. • When this instruction is activated, all core drivers, logics, and registers are frozen. The I/O pins remain clamped until the device exits ISP mode successfully.
ISC_DISABLE	10 0000 0001	• Brings the device out of ISP mode. • Successful completion of the ISC_DISABLE instruction happens immediately after waiting 200 µs in the Run-Test/Idle state.
ISC_PROGRAM[2]	10 1111 0100	Sets the device up for in-system programming. Programming occurs in the run-test or idle state.

ISC_NOOP[2]	10 0001 0000	• Sets the device to a no-operation mode without leaving the ISP mode and targets the ISC_Default register.
		• Use when:
		  • two or more ISP-compliant devices are being accessed in ISP mode and;
		  • a subset of the devices perform some instructions while other more complex devices are completing extra steps in a given process.

ISC_ADDRESS_SHIFT[2]	10 0000 0011	Sets the device up to load the flash address. It targets the ISC_Address register, which is the flash address register.
ISC_ERASE[2]	10 1111 0010	• Sets the device up to erase the internal flash. • Issue after ISC_ADDRESS_SHIFT instruction.
ISC_READ[2]	10 0000 0101	• Sets the device up for verifying the internal flash under normal user bias conditions. • The ISC_READ instruction supports explicit addressing and auto-increment, also known as the Burst mode.

(1) Do not issue the ISC_ENABLE_HIZ and ISC_ENABLE_CLAMP instructions from the core logic.
(2) All ISP and real-time ISP instructions are disabled when the device is not in the ISP or real-time ISP mode, except for the enabling and disabling instructions.

Instruction	Instruction Code	Description
BGP_ENABLE	01 1001 1001	• Sets the device to the real-time ISP mode. • Allows access to the internal flash configuration sector while the device is still in user mode.
BGP_DISABLE	01 0110 0110	• Brings the device out of the real-time ISP mode. • The device has to exit the real-time ISP mode using the BGP_DISABLE instruction after it is interrupted by reconfiguration.

Caution: Do not use unsupported JTAG instructions. It will put the device into an unknown state and requires a power cycle to recover the operation.

Initialization Configuration Bits

Initialization Configuration Bits (ICB) stores the configuration feature settings of the MAX 10 device. You can set the ICB settings during Convert Programming File.

Table 2-5: Initialization Configuration Bits for MAX 10 Devices

Configuration Settings	Description	Default State/Value
Power On Reset Scheme	• Instant ON • Fast POR delay • Slow POR delay	Instant ON
Set I/O to weak pull-up prior usermode	• Enable: Sets I/O to weak pull-up prior to usermode. • Disable: Tri-states I/O input.	Enable
Auto-reconfigure from secondary image when initial image fails.	Enable: • Device automatically loads secondary image if initial image fails. Disable: • Device automatically loads image 0. • Device does not load image 1 if image 0 fails. • CONFIG_SEL pin setting is ignored.	Enable
Use secondary image ISP data as default setting when available.	• Disable: Use ISP data from image 0 • Enable: Use ISP data from image 1 ISP data contains the information about state of the pin during ISP. This can be either tri-state with weak pull-up or clamp the I/O state. You can set the ISP clamp through **Device and Pin Option**, or **Pin Assignment** tool.	Disable
Verify Protect	To disable or enable the Verify Protect feature.	Disable

Configuration Settings	Description	Default State/Value
Allow encrypted POF only	If enabled, configuration error will occur if unencrypted **.pof** is used.	Disable
JTAG Secure[3]	To disable or enable the JTAG Secure feature.	Disable
Enable Watchdog	To disable or enable the watchdog timer for remote system upgrade.	Enable
Watchdog value	To set the watchdog timer value for remote system upgrade.	`0x1FFF`[4]

Related Information

- **.pof and ICB Settings** on page 3-5
- **.pof Generation through Convert Programming Files** on page 3-6
  Provides more information about setting the ICB during .pof generation using Convert Programming File.
- **Instant-on** on page 2-24
  Provides more information about Instant ON and other power on reset scheme.
- **Verify Protect** on page 2-17
- **JTAG Secure Mode** on page 2-17
- **ISP and Real-Time ISP Instructions** on page 2-5
- **User Watchdog Timer** on page 2-14

Configuration Features

Remote System Upgrade in Dual Compressed Images

MAX 10 devices support the remote system upgrade feature. By default, the remote system upgrade feature is enabled in all MAX 10 devices when you select the dual compressed image internal configuration mode.

The remote system upgrade feature in MAX 10 devices offers the following capabilities:

- Manages remote configuration
- Provides error detection, recovery, and information
- Supports direct-to-application configuration image
- Supports compressed and encrypted **.pof**

You can use the Altera Dual Configuration IP core or the remote system upgrade circuitry to access the remote system upgrade block in MAX 10 devices.

(3) The JTAG Secure feature will be disabled by default in Quartus II. If you are interested in using the JTAG Secure feature, contact Altera for support.
(4) The watchdog timer value depends on the MAX 10 you are using. Refer to the Watchdog Timer section for more information.

Related Information

AN 741: Remote System Upgrade for MAX 10 FPGA Devices over UART with the Nios II Processor
Provides reference design for remote system upgrade in MAX 10 FPGA devices.

Remote System Upgrade Flow

Both the application configuration images, image 0 and image 1, are stored in the CFM. The MAX 10 device loads either one of the application configuration image from the CFM.

Figure 2-3: Remote System Upgrade Flow for MAX 10 Devices

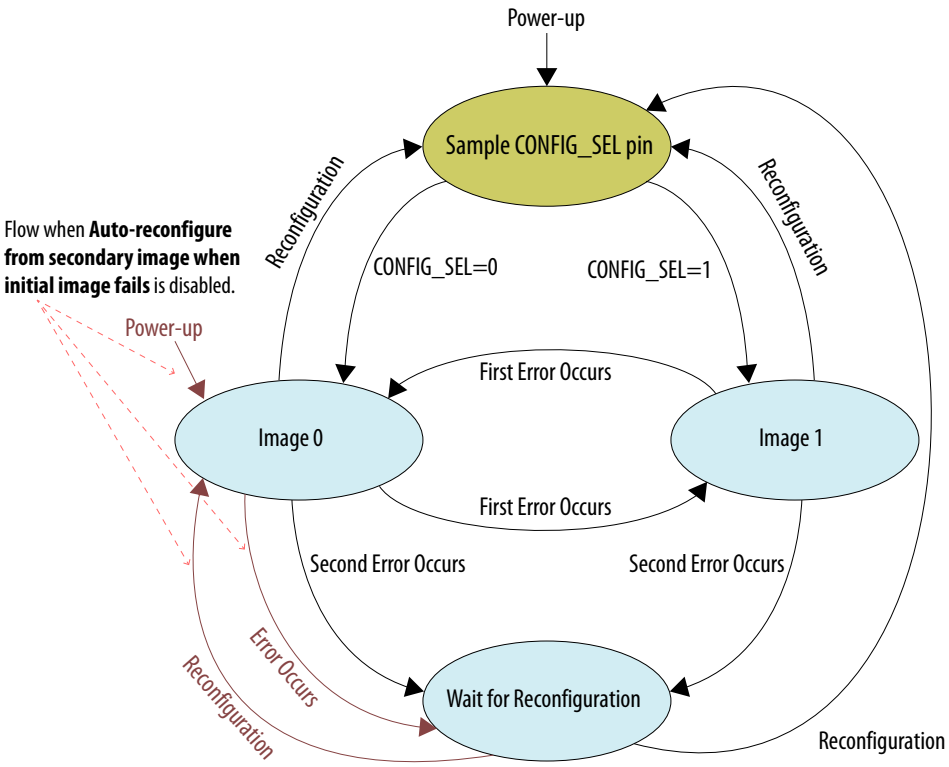

The remote system upgrade feature detects errors in the following sequence:

1. After power-up, the device samples the `CONFIG_SEL` pin to determine which application configuration image to load. The `CONFIG_SEL` pin setting can be overwritten by the input register of the remote system upgrade circuitry for the subsequent reconfiguration.
2. If an error occurs, the remote system upgrade feature reverts by loading the other application configuration image. These errors cause the remote system upgrade feature to load another application configuration image:
   - Internal CRC error
   - User watchdog timer time-out
3. Once the revert configuration completes and the device is in user mode, you can use the remote system upgrade circuitry to query the cause of error and which application image failed.
4. If a second error occurs, the device waits for a reconfiguration source. If the **Auto-restart configuration after error** is enabled, the device will reconfigure without waiting for any reconfiguration source.
5. Reconfiguration is triggered by the following actions:

- Driving the `nSTATUS` low externally.
- Driving the `nCONFIG` low externally.
- Driving `RU_nCONFIG` low.

Remote System Upgrade Circuitry

Figure 2-4: Remote System Upgrade Circuitry

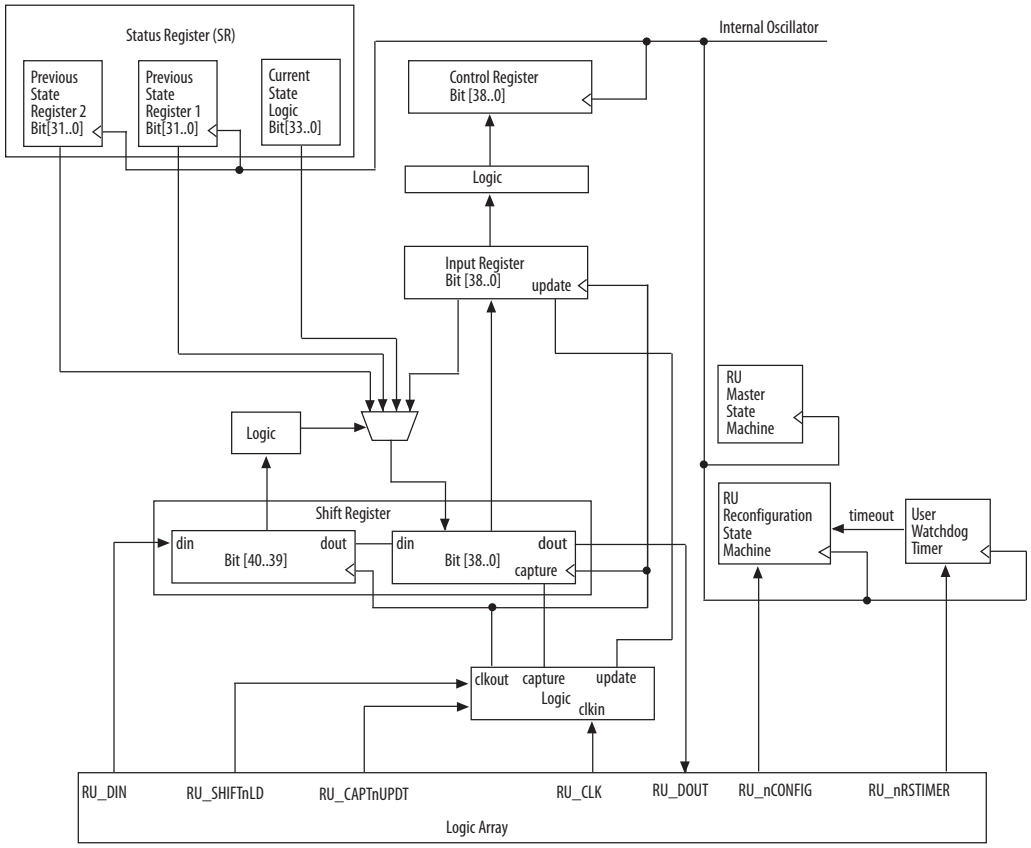

The remote system upgrade circuitry does the following functions:

- Tracks the current state of configuration
- Monitors all reconfiguration sources
- Provides access to set up the application configuration image
- Returns the device to fallback configuration if an error occurs
- Provides access to the information on the failed application configuration image

Remote System Upgrade Circuitry Signals

Table 2-6: Remote System Upgrade Circuitry Signals for MAX 10 Devices

Core Signal Name	Logical Signal Name	Input/ Output	Description
RU_DIN	regin	Input	Use this signal to write data to the shift register on the rising edge of RU_CLK. To load data to the shift register, assert RU_SHIFTnLD.
RU_DOUT	regout	Output	Use this signal to get output data from the shift register. Data is clocked out on each rising edge of RU_CLK if RU_SHIFTnLD is asserted.
RU_nRSTIMER	rsttimer	Input	• Use this signal to reset the user watchdog timer. A falling edge of this signal triggers a reset of the user watchdog timer. • To reset the timer, pulse the RU_nRSTIMER signal for a minimum of 250 ns.
RU_nCONFIG	rconfig	Input	Use this signal to reconfigure the device. Driving this signal low triggers the device to reconfigure if you enable the remote system upgrade feature.
RU_CLK	clk	Input	The clock to the remote system upgrade circuitry. All registers in this clock domain are enabled in user mode if you enable the remote system upgrade. Shift register and input register are positive edge flip-flops.
RU_SHIFTnLD	shiftnld	Input	Control signals that determine the mode of remote system upgrade circuitry. • When RU_SHIFTnLD is driven low and RU_CAPTnUPDT is driven low, the input register is loaded with the contents of the shift register on the rising edge of RU_CLK. • When RU_SHIFTnLD is driven low and RU_CAPTnUPDT is driven high, the shift register captures values from the input_cs_ps module on the rising edge of RU_CLK. • When RU_SHIFTnLD is driven high, the RU_CAPTnUPDT will be ignored and the shift register shifts data on each rising edge of RU_CLK.
RU_CAPTnUPDT	captnupdt	Input	

Related Information

- **Accessing the Remote System Upgrade Block Through User Interface** on page 3-7
  Provides more information about accessing the remote system upgrade through user interface atom.
- **MAX 10 Device Datasheet**
  Provides more information about Remote System Upgrade timing specifications.

Remote System Upgrade Circuitry Input Control

The remote system upgrade circuitry has three modes of operation.

- Update—loads the values in the shift register into the input register.
- Capture—loads the shift register with data to be shifted out.
- Shift—shifts out data to the user logic.

Table 2-7: Control Inputs to the Remote System Upgrade Circuitry

Remote System Upgrade Circuitry Control Inputs				Operation Mode	Input Settings for Registers	
RU_SHIFTnLD	RU_CAPTnUPDT	Shift register [40]	Shift register [39]		Shift Register[38:0]	Input Register[38:0]
0	0	Don't Care	Don't Care	Update	Shift Register [38:0]	Shift Register [38:0]
0	1	0	0	Capture	Current State	Input Register[38:0]
0	1	0	1	Capture	{8'b0, Previous State Application1}	Input Register[38:0]
0	1	1	0	Capture	{8'b0, Previous State Application2}	Input Register[38:0]
0	1	1	1	Capture	Input Register[38:0]	Input Register[38:0]
1	Don't Care	Don't Care	Don't Care	Shift	{ru_din, Shift Register [38:1]}	Input Register[38:0]

The following shows examples of driving the control inputs in the remote system upgrade circuitry:

- When you drive `RU_SHIFTnLD` high to 1'b1, the shift register shifts data on each rising edge of `RU_CLK` and `RU_CAPTnUPDT` has no function.
- When you drive both `RU_SHIFTnLD` and `RU_CAPTnUPDT` low to 1'b0, the input register is loaded with the contents of the shift register on the rising edge of `RU_CLK`.
- When you drive `RU_SHIFTnLD` low to 1'b0 and RU_CAPTnUPDT high to 1'b1, the shift register captures values on the rising edge of `RU_DCLK`.

Remote System Upgrade Input Register

Table 2-8: Remote System Upgrade Input Register for MAX 10 Devices

Bits	Name	Description
38:14	Reserved	Reserved—set to `0`.

Bits	Name	Description
13	`ru_config_sel`	• 0: Load configuration image 0 • 1: Load configuration image 1 This bit will only work if the `ru_config_sel_overwrite` bit is set to `1`.
12	`ru_config_sel_overwrite`	• 0: Disable overwrite `CONFIG_SEL` pin • 1: Enable overwrite `CONFIG_SEL` pin
11:0	Reserved	Reserved—set to `0`.

Remote System Upgrade Status Registers

Table 2-9: Remote System Upgrade Status Register—Current State Logic Bit for MAX 10 Devices

Bits	Name	Description
33:30	`msm_cs`	The current state of the master state machine (MSM).
29	`ru_wd_en`	The current state of the enabled user watchdog timer. The default state is active high.
28:0	`wd_timeout_value`	The current, entire 29-bit watchdog time-out value.

Table 2-10: Remote System Upgrade Status Register—Previous State Bit for MAX 10 Devices

Bits	Name	Description
31	`nconfig`	An active high field that describes the reconfiguration sources which caused the MAX 10 device to leave the previous application configuration. In the event of a tie, the higher bit order takes precedence. For example, if the `nconfig` and the `ru_nconfig` triggered at the same time, the `nconfig` takes precedence over the `ru_nconfig`.
30	`crcerror`	
29	`nstatus`	
28	`wdtimer`	
27:26	`Reserved`	Reserved—set to `0`.
25:22	`msm_cs`	The state of the MSM when a reconfiguration event occurred. The reconfiguration will cause the device to leave the previous application configuration.
21:0	`Reserved`	Reserved—set to `0`.

Related Information

Altera Dual Configuration IP Core Avalon-MM Address Map on page 5-1

Master State Machine

The master state machine (MSM) tracks current configuration mode and enables the user watchdog timer.

Table 2-11: Remote System Upgrade Master State Machine Current State Descriptions for MAX 10 Devices

msm_cs Values	State Description
0010	Image 0 is being loaded.
0011	Image 1 is being loaded after a revert in application image happens.
0100	Image 1 is being loaded.
0101	Image 0 is being loaded after a revert in application image happens.

User Watchdog Timer

The user watchdog timer prevents a faulty application configuration from stalling the device indefinitely. You can use the timer to detect functional errors when an application configuration is successfully loaded into the device.

The counter is 29 bits wide and has a maximum count value of 2^{29}. When specifying the user watchdog timer value, specify only the most significant 12 bits. The granularity of the timer setting is 2^{17} cycles. The cycle time is based on the frequency of the user watchdog timer internal oscillator. Depending on the counter and the internal oscillator of the device, you can set the cycle time from 9ms to 244s.

Figure 2-5: Watchdog Timer Formula for MAX 10 Devices

$$\text{Watchdog timer time-out (seconds)} = \frac{\text{Watchdog timer value (decimal)}}{\text{Watchdog timer frequency}}$$

The timer begins counting as soon as the application configuration enters user mode. When the timer expires, the remote system upgrade circuitry generates a time-out signal, updates the status register, and triggers the loading of the revert configuration image. To reset the timer, pulse the `RU_NRSTIMER` for a minimum of 250 ns.

When you enable the watchdog timer, the setting will apply to all images, all images should contain the soft logic configuration to reset the timer. Application Configuration will reset the control block registers.

Related Information

- **User Watchdog Internal Circuitry Timing Specifications**
  Provides more information about the user watchdog frequency.
- **Initialization Configuration Bits** on page 2-7

Altera Dual Configuration IP Core

The Altera Dual Configuration IP core offers the following capabilities through Avalon-MM interface:

- Asserts `RU_nCONFIG` to trigger reconfiguration.
- Asserts `RU_nRSTIMER` to reset watchdog timer if the watchdog timer is enabled.
- Writes configuration setting to the input register of the remote system upgrade circuitry.
- Reads information from the remote system upgrade circuitry.

Figure 2-6: Altera Dual Configuration IP Core Block Diagram

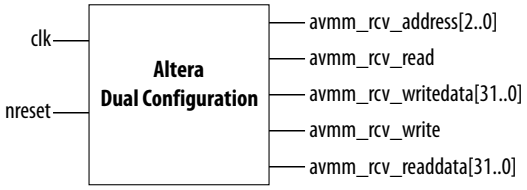

Related Information

- **Altera Dual Configuration IP Core Avalon-MM Address Map** on page 5-1
- **Avalon Interface Specifications**
  Provides more information about the Avalon-MM interface specifications applied in Altera Dual Configuration IP Core.
- **Instantiating the Altera Dual Configuration IP Core** on page 4-2
- **Accessing the Remote System Upgrade Block Through User Interface** on page 3-7

Configuration Design Security

The MAX 10 design security feature supports the following capabilities:

- Encryption—Built-in encryption standard (AES) to support 128-bit key industry-standard design security algorithm
- Chip ID—Unique device identification
- JTAG secure mode—limits access to JTAG instructions
- Verify Protect—allows optional disabling of CFM content read-back

AES Encryption Protection

The MAX 10 design security feature provides the following security protection for your designs:

- Security against copying—the non-volatile key is securely stored in the MAX 10 devices and cannot be read through any interface. Without this key, attacker will not be able to decrypt the encrypted configuration image.
- Security against reverse engineering—reverse engineering from an encrypted configuration file is very difficult and time consuming because the file require decryption.
- Security against tampering—after you enable the JTAG Secure and Encrypted POF (EPOF) only, the MAX 10 device can only accept configuration files encrypted with the same key. Additionally, configuration through the JTAG interface is blocked.

Related Information

.pof Generation through Convert Programming Files on page 3-6

Encryption and Decryption

MAX 10 supports AES encryption. Programming bitstream is encrypted based on the encryption key that is specified by user. In MAX 10 devices, the key is part of the ICB settings stored in the internal flash. Hence, the key will be non-volatile but user can clear/delete the key by a full chip erase the device.

When you use compression with encryption, the configuration file is first compressed, and then encrypted using the Quartus II software. During configuration, the device first decrypts, and then decompresses the configuration file.

The header and I/O configuration shift register (IOCSR) data will not be encrypted. The decryption block is activated after the IOCSR chain is programmed. The decryption block only decrypts core data and postamble.

Related Information

JTAG Instruction Availability on page 2-17

Unique Chip ID

Unique chip ID provides the following features:

- Identifies your device in your design as part of a security feature to protect your design from an unauthorized device.
- Provides non-volatile 64-bits unique ID for each MAX 10 device with write protection.

You can use the Altera Unique Chip ID IP core to acquire the chip ID of your MAX 10 device.

Related Information

- **Altera Unique Chip ID IP Core** on page 4-1
- **Altera Unique Chip ID IP Core Ports** on page 6-1

Altera Unique Chip ID IP Core

Figure 2-7: Altera Unique Chip ID IP Core Block Diagram

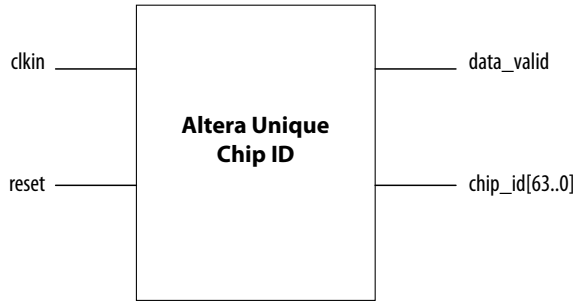

At the initial state, the `data_valid` signal is low because no data is read from the unique chip ID block. After feeding a clock signal to the `clkin` input port, the Altera Unique Chip ID IP core begins to acquire the chip ID of your device through the unique chip ID block. After acquiring the chip ID of your device, the Altera Unique Chip ID IP core asserts the `data_valid` signal to indicate that the chip ID value at the output port is ready for retrieval.

The operation repeats only when you provide another clock signal when the `data_valid` signal is low. If the `data_valid` signal is high when you provide another clock signal, the operation stops because the `chip_id[63..0]` output holds the chip ID of your device.

A minimum of 67 clock cycles are required for the `data_valid` signal to go high.

The `chip_id[63:0]`output port holds the value of chip ID of your device until you reconfigure the device or reset the Altera Unique Chip ID IP core.

JTAG Secure Mode

In **JTAG Secure** mode, the device only allows mandatory JTAG 1149.1 instructions to be exercised.

You can enable the JTAG secure when generating the **.pof** in the **Convert Programming Files**. To exit JTAG secure mode, issue the `UNLOCK` JTAG instruction. The `LOCK` JTAG instruction puts the device in the JTAG secure mode again. The `LOCK` and `UNLOCK` JTAG instructions can only be issued through the JTAG core access.

Related Information

- **JTAG Instruction Availability** on page 2-17
- **Configuration Flash Memory Permissions** on page 2-18
- **.pof Generation through Convert Programming Files** on page 3-6

JTAG Secure Mode Instructions

Table 2-12: JTAG Secure Mode Instructions for MAX 10 Devices

JTAG Instruction	Instruction Code	Description
`LOCK`	`10 0000 0010`	• Activates the JTAG secure mode. • Blocks access from both external pins and core to JTAG.
`UNLOCK`	`10 0000 1000`	Deactivates the JTAG secure mode.

Verify Protect

Verify Protect is a security feature to enhance CFM security. When you enable the **Verify Protect**, only program and erase operation are allowed on the CFM. This capability protects the CFM contents from being copied.

You can turn on the Verify Protect feature by enabling the **Verify Protect** in the Quartus II programmer.

Related Information

Configuration Flash Memory Permissions on page 2-18

JTAG Instruction Availability

Table 2-13: JTAG Instruction Availability Based on JTAG Secure Mode and Encryption Settings

JTAG Secure Mode	Encryption	Description
Disabled	Disabled	All JTAG Instructions enabled
	Enabled	All JTAG Instructions are enabled except: • `CONFIGURE`

JTAG Secure Mode	Encryption	Description
Enabled	Disabled	All JTAG Instructions are disabled except:
	Enabled	• SAMPLE/PRELOAD • BYPASS • EXTEST • IDCODE • UNLOCK • LOCK

Related Information

- **JTAG Secure Mode** on page 2-17
- **Encryption and Decryption** on page 2-15

Configuration Flash Memory Permissions

The JTAG secure mode and verify protect features determines the CFM operation permission.. The table list the operations permitted based on the security settings.

Table 2-14: CFM Permissions for MAX 10 Devices

Operation	JTAG Secure Mode Disabled		JTAG Secure Mode Enabled	
	Verify Protect Disabled	Verify Protect Enabled	Verify Protect Disabled	Verify Protect Enabled
ISP through core	Illegal operation	Illegal operation	Illegal operation	Illegal operation
ISP through JTAG pins	Full access	Program and erase only	No access	No access
Real-time ISP through core	Full access	Program and erase only	No access	No access
Real-time ISP through JTAG pins	Full access	Program and erase only	No access	No access
UFM interface through core[5]	Full access	Full access	Full access	Full access

Related Information

- **JTAG Secure Mode** on page 2-17
- **Verify Protect** on page 2-17

SEU Mitigation and Configuration Error Detection

The dedicated circuitry built in MAX 10 devices consists of an error detection cyclic redundancy check (EDCRC) feature. You can use this feature to mitigate single-event upset (SEU) or soft errors.

(5) The UFM interface through core is available if you select the dual compressed image mode.

The hardened on-chip EDCRC circuitry allows you to perform the following operations without any impact on the fitting of the device:

- Auto-detection of cyclic redundancy check (CRC) errors during configuration.
- Identification of SEU in user mode with the optional CRC error detection.
- Testing of error detection by error detection verification through the JTAG interface.

Related Information

- **Verifying Error Detection Functionality** on page 3-8
- **Enabling Error Detection** on page 3-8
- **Accessing Error Detection Block Through User Interface** on page 3-9

Configuration Error Detection

In configuration mode, a frame-based CRC is stored in the configuration data and contains the CRC value for each data frame.

During configuration, the MAX 10 device calculates the CRC value based on the frame of data that is received and compares it against the frame CRC value in the data stream. Configuration continues until the device detects an error or when all the values are calculated.

For MAX 10 devices, the CRC is computed by the Quartus II software and downloaded into the device as part of the configuration bit stream. These devices store the CRC in the 32-bit storage register at the end of the configuration mode.

User Mode Error Detection

SEUs are changes in a CRAM bit state due to an ionizing particle. MAX 10 devices have built-in error detection circuitry to detect data corruption in the CRAM cells.

This error detection capability continuously computes the CRC of the configured CRAM bits. The CRC of the contents of the device are compared with the pre-calculated CRC value obtained at the end of the configuration. If the CRC values match, there is no error in the current configuration CRAM bits. The process of error detection continues until the device is reset—by setting `nCONFIG` to low.

The error detection circuitry in MAX 10 device uses a 32-bit CRC IEEE Std. 802 and a 32-bit polynomial as the CRC generator. Therefore, the device performs a single 32-bit CRC calculation. If an SEU does not occur, the resulting 32-bit signature value is `0x000000`, which results in a `0` on the output signal `CRC_ERROR`. If an SEU occurs in the device, the resulting signature value is non-zero and the `CRC_ERROR` output signal is `1`. You must decide whether to reconfigure the FPGA by strobing the `nCONFIG` pin low or ignore the error.

Error Detection Block

Figure 2-8: Error Detection Block Diagram

Error detection block diagram including the two related 32-bit registers—the signature register and the storage register.

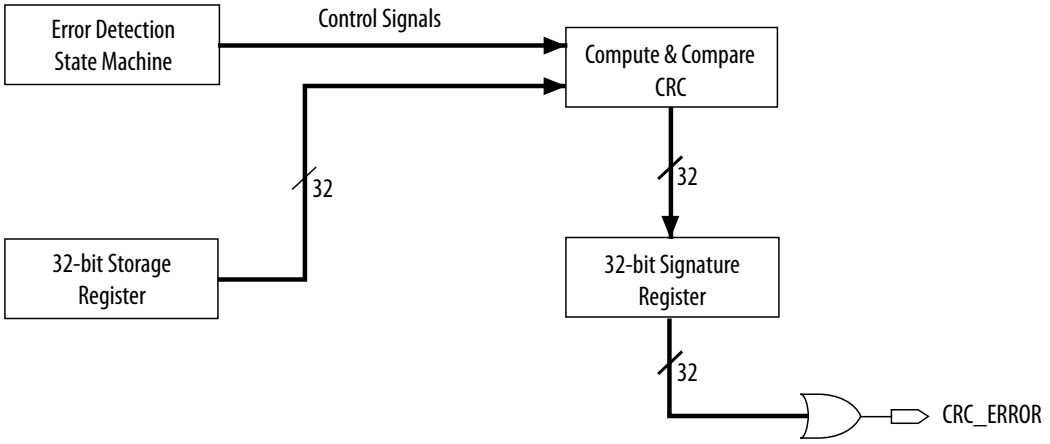

There are two sets of 32-bit registers in the error detection circuitry that store the computed CRC signature and pre-calculated CRC value. A non-zero value on the signature register causes the `CRC_ERROR` pin to go high.

Table 2-15: Error Detection Registers for MAX 10 Devices

Register	Description
32-bit signature register	This register contains the CRC signature. The signature register contains the result of the user mode calculated CRC value compared against the pre-calculated CRC value. If no errors are detected, the signature register is all zeroes. A non-zero signature register indicates an error in the configuration CRAM contents. The `CRC_ERROR` signal is derived from the contents of this register.
32-bit storage register	This register is loaded with the 32-bit pre-computed CRC signature at the end of the configuration stage. The signature is then loaded into the 32-bit Compute and Compare CRC block during user mode to calculate the CRC error. This register forms a 32-bit scan chain during execution of the `CHANGE_EDREG` JTAG instruction. The `CHANGE_EDREG` JTAG instruction can change the content of the storage register. Therefore, the functionality of the error detection CRC circuitry is checked in-system by executing the instruction to inject an error during the operation. The operation of the device is not halted when issuing the `CHANGE_EDREG` JTAG instruction.

CHANGE_EDREG JTAG Instruction

Table 2-16: CHANGE_EDREG JTAG Instruction Description

JTAG Instruction	Instruction Code	Description
CHANGE_EDREG	00 0001 0101	This instruction connects the 32-bit CRC storage register between TDI and TDO. Any precomputed CRC is loaded into the CRC storage register to test the operation of the error detection CRC circuitry at the CRC_ERROR pin.

Error Detection Timing

When the error detection CRC feature is enabled through the Quartus II software, the device automatically activates the CRC process upon entering user mode, after configuration and initialization is complete.

The CRC_ERROR pin will remain low until the error detection circuitry has detected a corrupted bit in the previous CRC calculation. After the pin goes high, it remains high during the next CRC calculation. This pin does not log the previous CRC calculation. If the new CRC calculation does not contain any corrupted bits, the CRC_ERROR pin is driven low. The error detection runs until the device is reset.

The error detection circuitry is clocked by an internal configuration oscillator with a divisor that sets the maximum frequency. The CRC calculation time depends on the device and the error detection clock frequency.

Related Information

Enabling Error Detection on page 3-8

Error Detection Frequency

You can set a lower clock frequency by specifying a division factor in the Quartus II software.

Table 2-17: Minimum and Maximum Error Detection Frequencies for MAX 10 Devices—Preliminary

Device	Error Detection Frequency	Maximum Error Detection Frequency (MHz)	Minimum Error Detection Frequency (kHz)	Valid Values for n
10M02	55 MHz/2^n to 116 MHz/2^n	58	214.8	2, 3, 4, 5, 6, 7, 8
10M04				
10M08				
10M16				
10M25				
10M40	35 MHz/2^n to 77 MHz/2^n	38.5	136.7	
10M50				

Cyclic Redundancy Check Calculation Timing

Table 2-18: Cyclic Redundancy Check Calculation Time for MAX 10 Devices—Preliminary

Device	Divisor Value (n = 2)	
	Minimum Time (ms)	Maximum Time (ms)
10M02	2	6.6
10M04	6	15.7
10M08	6	15.7
10M16	10	25.5
10M25	14	34.7
10M40	43	106.7
10M50	43	106.7

Figure 2-9: CRC Calculation Formula

You can use this formula to calculate the CRC calculation time for divisor other than 2.

$$CRC\ Calculation\ Time_{\ Divisor\ n} = CRC\ Calculation\ Time_{\ Divisor\ 2} \times \frac{n}{2}$$

Example 2-1: CRC Calcualtion Example

For 10M16 device with divisor value of 256:

Minimum CRC calculation time for divisor 256 = 10 x (256/2) = 1280 ms

Recovering from CRC Errors

The system that MAX 10 resides in must control device reconfiguration. After detecting an error on the `CRC_ERROR` pin, strobing the `nCONFIG` pin low directs the system to perform reconfiguration at a time when it is safe for the system to reconfigure the MAX 10 device.

When the data bit is rewritten with the correct value by reconfiguring the device, the device functions correctly.

While SEUs are uncommon in Altera devices, certain high-reliability applications might require a design to account for these errors.

Configuration Data Compression

MAX 10 devices can receive compressed configuration bitstream and decompress the data in real-time during configuration. This feature helps to reduce the configuration image size stored in the CFM. Preliminary data indicates that compression typically reduces the configuration file size by at least 30% depending on the design.

Related Information

- **Enabling Compression Before Design Compilation** on page 3-10
- **Enabling Compression After Design Compilation** on page 3-10

Configuration Details

Configuration Sequence

Figure 2-10: Configuration Sequence for MAX 10 Devices

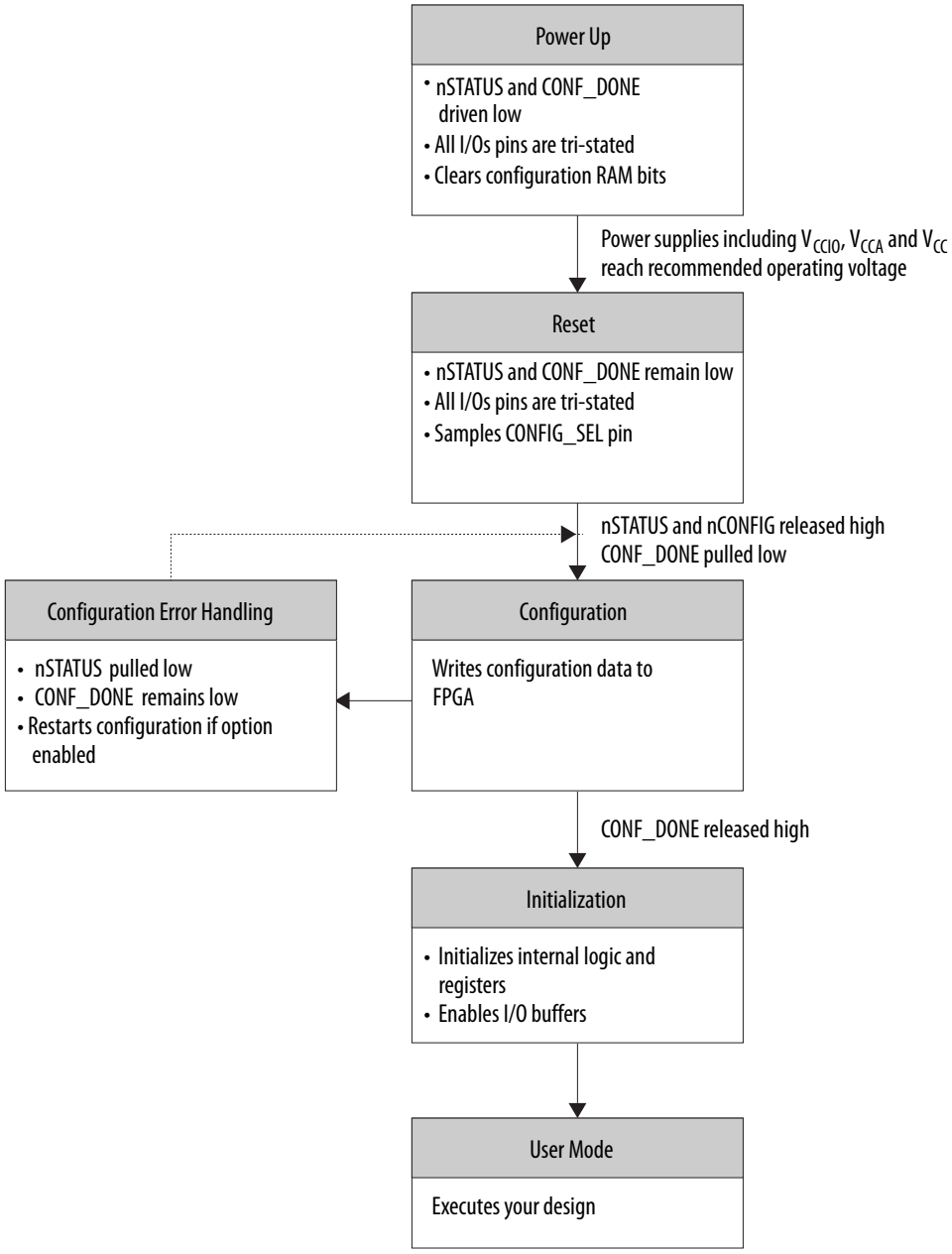

You can initiate reconfiguration by pulling the `nCONFIG` pin low to at least the minimum t_{CFG} low-pulse width. When this pin is pulled low, the `nSTATUS` and `CONF_DONE` pins are pulled low and all I/O pins are tied to an internal weak pull-up.

Related Information

.pof Generation through Convert Programming Files on page 3-6
Provides more information about how to set th weak pull-up during configuration.

Power Up

If you power-up a device from the power-down state, you need to power the V_{CCIO} for bank 1B and 8 to the appropriate level for the device to exit POR.

To begin configuration, the required voltages must be powered up to the appropriate voltage levels as shown in the following table. The V_{CCIO} for bank 1B and bank 8 must be powered up to a voltage between 1.5V – 3.3V during configuration.

Table 2-19: Single-Supply and Dual-Supply Voltage Requirements for MAX 10 Devices

Power Supply Device Options	Voltage that must be Powered-Up
Single-supply	Regulated V_{CC_ONE}
	V_{CCA}
	V_{CCIO} bank 1B and bank 8
Dual-supply	V_{CC}
	V_{CCA}
	V_{CCIO} bank 1B and bank 8

Related Information

- **MAX 10 Power Management User Guide**
  Provides more information about power supply modes in MAX 10 devices
- **MAX 10 Device Datasheet**
  Provides more information about the ramp-up time specifications.
- **MAX 10 FPGA Device Family Pin Connection Guideline**
  Provides more information about configuration pin connections.

Instant-on

The MAX 10 devices support instant-on feature. The instant-on mode is the fastest power-up mode for MAX 10 devices.

If you enable instant-on, the device will directly enter the configuration stage. The POR delay value will be used to delay the POR signal if the instant-on feature is not enabled.

Table 2-20: Instant-On Power Up Sequence Requirement for MAX 10 Devices

Power Supply Device Options	Power Up Sequence
Single-supply	V_{CCIO} must ramp up to full rail before V_{CCA} and V_{CC_ONE} start ramping
Dual-supply	All power supplies must ramp up to full rail before V_{CC} starts ramping

Table 2-21: POR Requirements and Timing for MAX 10 Devices

Instant-On	POR Delay Setting	Ramp Rate Requirement (t_{RAMP})	POR Delay (t_{POR})
Enabled	Don't Care	200 us to 3 ms	No delay
Disabled	Fast POR	200 us to 3 ms	3 ms to 9 ms
Disabled	Standard POR	200 us to 50 ms	50 ms to 200 ms

Reset

POR delay is the time frame between the time when all the power supplies monitored by the POR circuitry reach the recommended operating voltage and when `nSTATUS` is released high and the MAX 10 device is ready to begin configuration.

Configuration

During configuration, the configuration data is written to the device.

Configuration Error Handling

To restart configuration automatically, turn on the **Auto-restart configuration after error** option in the **General** page of the **Device and Pin Options** dialog box in the Quartus II software.

If you do not turn on this option, you can monitor the `nSTATUS` pin to detect errors. To restart configuration, pull the `nCONFIG` pin low for at least the duration of t_{CFG}.

Initialization

After you pull the `CONF_DONE` pin high, the initialization sequence begins. The initialization clock source is from the internal oscillator. By default, the internal oscillator is the clock source for initialization. If you use the internal oscillator, the MAX 10 device will receive enough clock cycles for proper initialization.

User Mode

After the initialization completes, your design starts executing. The user I/O pins will then function as specified by your design.

MAX 10 Configuration Pins

All configuration pins and JTAG pins in MAX 10 devices are dual-purpose pins. The configuration pins function as configuration pins prior to user mode. When the device is in user mode, they function as user I/O pins or remain as configuration pins.

Table 2-22: Configuration Pin Summary for MAX 10 Devices

All pins are powered by V_{CCIO} Bank 1B and 8.

Configuration Pin	Input/Output	Configuration Scheme
`CRC_ERROR`	Output only, open-drain	Optional, JTAG and internal configurations
`CONFIG_SEL`	Input only	Internal configuration
`DEV_CLRn`	Input only	Optional, JTAG and internal configurations

Configuration Pin	Input/Output	Configuration Scheme
DEV_OE	Input only	Optional, JTAG and internal configurations
CONF_DONE	Bidirectional, open-drain	JTAG and internal configurations
nCONFIG	Input only	JTAG and internal configurations
nSTATUS	Bidirectional, open-drain	JTAG and internal configurations
JTAGEN	Input only	Optional, JTAG configuration
TCK	Input only	JTAG configuration
TDO	Output only	JTAG configuration
TMS	Input only	JTAG configuration
TDI	Input only	JTAG configuration

Related Information

- **Guidelines: Dual-Purpose Configuration Pin** on page 3-1
- **Enabling Dual-purpose Pin** on page 3-2

JTAG Pin Sharing Behavior

Table 2-23: JTAG Pin Sharing Behavior for MAX 10 Devices

Configuration Stage	JTAG Pin Sharing	JTAGEN Pin	JTAG Pins (TDO, TDI, TCK, TMS)
User mode	Disabled	User I/O pin	Dedicated JTAG pins.
	Enabled	Driven low	User I/O pins.
		Driven high	Dedicated JTAG pins.
Configuration	Don't Care	Not used	Dedicated JTAG pins.

MAX 10 FPGA Configuration Design Guidelines

3

2015.06.15

UG-M10CONFIG Subscribe Send Feedback

Dual-Purpose Configuration Pins

Guidelines: Dual-Purpose Configuration Pin

To use configuration pins as user I/O pins in user mode, you have to adhere to the following guidelines.

Table 3-1: Dual-Purpose Configuration Pin Guidelines for MAX 10 Devices

Pins	Guidelines
nCONFIG	During initialization: • tri-state the external I/O driver and drive an external pull-up resistor[6] or • use the external I/O driver to drive the pins to the state same as the external weak pull-up resistor
nSTATUS	
CONF_DONE	
nSTATUS	Tri-state the external driver of the configuration pins before the t_{WAIT} (minimum) wait time is reached. You can use these pins for configuration purpose after t_{WAIT} (maximum).
CONF_DONE	
TDO	
nCONFIG	You can only use the nCONFIG pin as a single-ended input pin in user mode. If the nCONFIG is set as user I/O, you can trigger the reconfiguration by: • asserting RU_nCONFIG of the remote system upgrade circuitry • issuing PULSE_NCONFIG JTAG instruction

(6) If you intend to remove the external weak pull-up resistor, Altera recommends that you remove it after the device enters user mode.

© 2015 Altera Corporation. All rights reserved. ALTERA, ARRIA, CYCLONE, ENPIRION, MAX, MEGACORE, NIOS, QUARTUS and STRATIX words and logos are trademarks of Altera Corporation and registered in the U.S. Patent and Trademark Office and in other countries. All other words and logos identified as trademarks or service marks are the property of their respective holders as described at www.altera.com/common/legal.html. Altera warrants performance of its semiconductor products to current specifications in accordance with Altera's standard warranty, but reserves the right to make changes to any products and services at any time without notice. Altera assumes no responsibility or liability arising out of the application or use of any information, product, or service described herein except as expressly agreed to in writing by Altera. Altera customers are advised to obtain the latest version of device specifications before relying on any published information and before placing orders for products or services.

ISO 9001:2008 Registered

Pins	Guidelines
TDO	• If you intend to switch back and forth between user I/O pins and JTAG pin functions using the JTAGEN pin, all JTAG pins must be assigned as single-ended I/O pins or voltage-referenced I/O pins. Schmitt trigger input is the recommended input buffer. • JTAG pins cannot perform as JTAG pins in user mode if you assign any of the JTAG pin as a differential I/O pin. • You must use the JTAG pins as dedicated pins and not as user I/O pins during JTAG programming. • Do not toggle JTAG pin during the initialization stage. • Put the test access port (TAP) controller in reset state and drive the TDI and TMS pins high and TCK pin low before the initialization.
TMS	
TCK	
TDI	

Related Information

- **MAX 10 FPGA Device Family Pin Connection Guidelines**
  Provides more information about recommended resistor values.
- **MAX 10 Configuration Pins** on page 2-25
- **JTAG Pins** on page 2-2

Enabling Dual-purpose Pin

To use the configuration and JTAG pins as user I/O in user mode, you must do the following in the Quartus II software:

1. On the **Assignments** menu, click **Device**.
2. Click **Device and Pin Options**.
3. Select the **General** tab of **Device and Pin Options**.
4. In the **General Options** list, do the following:
   - Check the **Enable JTAG pin sharing to use JTAG pins as user I/O**.
   - Uncheck the **Enable nCONFIG, nSTATUS, and CONF_DONE pins to use configuration pins as user I/O**.

Related Information

- **MAX 10 Configuration Pins** on page 2-25
- **JTAG Pins** on page 2-2

Configuring MAX 10 Devices using JTAG Configuration

The Quartus II software generates a **.sof** that can used for JTAG configuration. You can directly configure the MAX 10 device by using a download cable with the Quartus II software programmer.

Alternatively, you can use the JRunner software with a JAM Standard Test and Programming Language (STAPL) Format File (**.jam**) or JAM Byte Code File (**.jbc**) with other third-party programmer tools.

Related Information

- **AN 414: The JRunner Software Driver: An Embedded Solution for PLD JTAG Configuration**

- **AN 425: Using the Command-Line Jam STAPL Solution for Device Programming**

JTAG Configuration Setup

To configure MAX 10 device using a download cable, connect the device as shown in the following figure.

Figure 3-1: JTAG Configuration of a Single Device Using a Download Cable

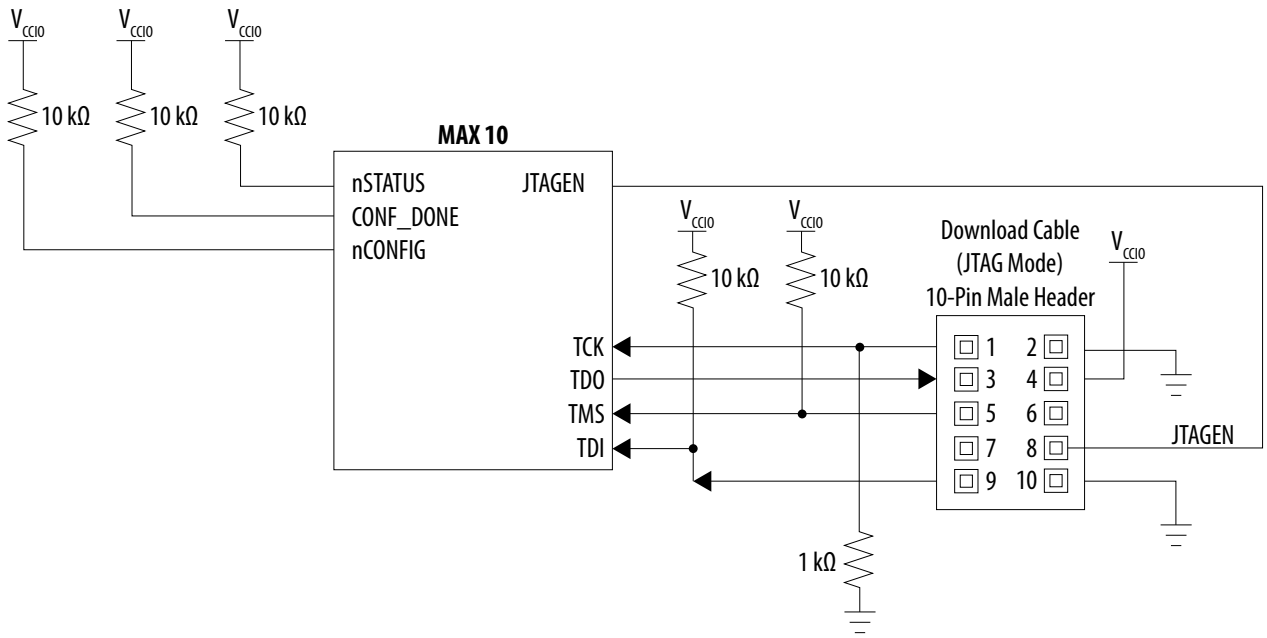

To configure a device in a JTAG chain, the programming software sets the other devices to bypass mode. A device in bypass mode transfers the programming data from the `TDI` pin to the `TDO` pin through a single bypass register. The configuration data is available on the `TDO` pin one clock cycle later.

The Quartus II software uses the `CONF_DONE` pin to verify the completion of the configuration process through the JTAG port:

- `CONF_DONE` pin is low—indicates that the configuration has failed.
- `CONF_DONE` pin is high—indicates that the configuration was successful.

After the configuration data is transmitted serially using the JTAG `TDI` port, the `TCK` port is clocked to perform device initialization.

Voltage Overshoot Prevention

To prevent voltage overshoot, power up the download cable to 2.5 V when VCCIO of the JTAG pins are 2.5 V to 3.3 V. Tie the `TCK` pin to ground. If the VCCIO of the JTAG pins are using 1.5 V or 1.8 V, the download cable should be powered by the same VCCIO. For single-supply device which has to power-up the download cable within the range of 3.0 V to 3.3 V, Altera recommends you to add external resistor or diode.

JTAGEN

If you use the `JTAGEN` pin, Altera recommends the following settings:

- Once you entered user mode and JTAG pins are regular I/O pins—connect the `JTAGEN` pin to a weak pull-down (1 kΩ).
- Once you entered user mode and JTAG pins are dedicated pins—connect the `JTAGEN` pin to a weak pull-up (10 kΩ).

ICB Settings in JTAG Configuration

The ICB settings is loaded into the device during **.pof** programming of the internal configuration scheme. The .sof used during JTAG configuration does not contain ICB settings. The Quartus II Programmer will make the necessary setting based on the following:

- Device without ICB settings—ICB settings cleared from the internal flash or new device
- Device with ICB settings—prior ICB settings programmed using **.pof**

Device Without ICB Settings

For devices without ICB settings, the default value will be used. However, Quartus II Programmer disables the user watchdog timer by setting the Watchdog Timer Enable bit to 0. This step is to avoid any unwanted reconfiguration occurred due to user watchdog timeout.

If the default ICB setting is undesired, you can program the desirable ICB setting first by using **.pof** programming before doing the JTAG configuration.

Device With ICB Settings

For device with ICB settings, the settings will be preserved until the internal flash is erased. Hence, you need to remember the previous ICB settings because JTAG configuration will follow the ICB setting and behave accordingly.

If the prior ICB setting is undesired, you can program the desirable ICB setting first by using **.pof** programming before doing the JTAG configuration.

Related Information

- **.pof and ICB Settings** on page 3-5
- **.pof Generation through Convert Programming Files** on page 3-6
  Provides more information about setting the ICB during .pof generation using Convert Programming File.
- **Instant-on** on page 2-24
  Provides more information about Instant ON and other power on reset scheme.
- **Verify Protect** on page 2-17
- **JTAG Secure Mode** on page 2-17
- **ISP and Real-Time ISP Instructions** on page 2-5
- **User Watchdog Timer** on page 2-14

Configuring MAX 10 Devices using Internal Configuration

There are three main steps for using internal configuration scheme for MAX 10 devices.

- Select the internal configuration scheme
- Generate the **.pof** with ICB settings
- Program the **.pof** the internal flash

Related Information

- **Internal Configuration Modes** on page 2-2
- **Remote System Upgrade in Dual Compressed Images** on page 2-8

Selecting Internal Configuration Modes

To select the configuration mode, follow these steps:

1. Open the Quartus II software and load a project using a MAX 10 device.
2. On the **Assignments** menu, click **Settings**. The **Settings** dialog box appears.
3. In the **Category** list, select **Device**. The **Device** page appears.
4. Click **Device and Pin Options**.
5. In the **Device and Pin Options** dialog box, click the **Configuration** tab.
6. In the **Configuration Scheme** list, select **Internal Configuration**.
7. In the **Configuration Mode** list, select 1 out of 5 configuration modes available. The 10M02 devices has only 2 modes available.
8. Turn on **Generate compressed bitstreams** if needed.
9. Click **OK**.

.pof and ICB Settings

There are two methods which the **.pof** will be generated and setting-up the ICB. The internal configuration mode you selected will determine the corresponding method.

Table 3-2: .pof Generation and ICB Setting Method for Internal Configuration Modes

Internal Configuration Mode	.pof Generation and ICB Setting Method	Description
Single Compressed Image	Auto-generated **.pof**[7]	• Quartus II will automatically generate the **.pof** during project compilation • ICB can be set in **Device and Pin Options**
Single Uncompressed Image		

[7] Auto-generated .pof does not allow encryption. To enable the encryption feature in Single Compressed and Single Uncompressed mode, use the Convert Programming Files method.

Internal Configuration Mode	.pof Generation and ICB Setting Method	Description
Single Compressed Image with Memory Initialization.	**Convert Programming Files**	• User needs to generate **.pof** using **Convert Programming Files**. • ICB can be set during **Convert Programming Files** task.
Single Uncompressed Image with Memory Initialization		
Dual Compressed Images		

Auto-Generated .pof

To set the ICB for the auto-generated .pof, follow these steps:

1. On the **Assignments** menu, click **Settings**. The **Settings** dialog box appears.
2. In the **Category** list, select **Device**. The **Device** page appears.
3. Click **Device and Pin Options**.
4. In the **Device and Pin Options** dialog box, select the **Configuration** from the category pane.
5. Click the **Device Options …** button.
6. The **Max 10 Device Options** dialog box allows you to set the following:
   a. Power on Reset Scheme: Instant On, Fast POR Delay or Standard POR Delay.
   b. User IOs week pull up during configuration.
   c. Verify Protect.
7. Click **OK** once setting is completed.

.pof Generation through Convert Programming Files

To convert **.sof** files to **.pof** files, follow these steps:

1. On the **File** menu, click **Convert Programming Files**.
2. Under **Output programming file**, select **Programmer Object File** (**.pof**) in the **Programming file type** list.
3. In the **Mode** list, select **Internal Configuration**.
4. In the **File name** box, specify the file name for the programming file you want to create.
5. To generate a Memory Map File (**.map**), turn on **Create Memory Map File** (Auto generate output_file.map). The **.map** contains the address of the CFM and UFM with the ICB setting that you set through the **Option/Boot Info** option.
6. To generate a Raw Programming Data (**.rpd**), turn on **Create config data RPD** (Generate output_file_auto.rpd).

   With the help of Memory Map File, you can easily identify the data for each functional block in the **.rpd** file. You can also extract the flash data for third party programming tools or update the configuration or user data through the Altera On-Chip Flash IP.
7. The **.sof** can be added through **Input files to convert** list and you can add up to two **.sof** files.

For remote system upgrade purposes, you can retain the original page 0 data in the **.pof**, and replace page 1 data with new **.sof** file. To perform this, you need to add the **.pof** file in page 0, then add **.sof** page, then add the new **.sof** file to page 1.

8. After all settings are set, click **Generate** to generate related programming file.

Related Information

MAX 10 User Flash Memory User Guide
Provides more information about Altera On-Chip Flash IP Core.

Programming .pof into Internal Flash

You can use the Quartus II Programmer to program the **.pof** into the CFM through JTAG interface. The Quartus II Programmer also allows you to program the UFM part of the internal flash.

To program the **.pof** into the flash, follow these steps:

1. In the **Programmer** window, click **Hardware Setup** and select **USB Blaster**.
2. In the **Mode** list, select **JTAG**.
3. Click **Auto Detect** button on the left pane.
4. Select the device to be programmed, and click **Add File**.
5. Select the **.pof** to be programmed to the selected device.
6. There are several options in programming the internal flash:
   - To program any of the CFM0/CFM1/CFM2 only, select the corresponding CFM in the Program/Configure column.
   - To program the UFM only, select the UFM in the Program/Configure column.
   - To program the CFM and UFM only, select the CFM and UFM in the Program/Configure column.

     Note: ICB setting is preserved in this option. However, before the programming starts, Quartus II Programmer will make sure the ICB setting in the device and the ICB setting in the selected **.pof** are the same. If the ICB settings are different, Quartus II Programmer will overwrite the ICB setting.
   - To program the whole internal flash including the ICB settings, select the **<yourpoffile.pof>** in the Program/Configure column.
7. To enable the real-time ISP mode, turn-on the **Enable real-time ISP to allow background programming**.
8. After all settings are set, click **Start** to start programming.

Accessing the Remote System Upgrade Block Through User Interface

The following example shows how the input and output ports of a WYSIWYG atom are defined in the MAX 10 device.

```
fiftyfivenm_rublock <rublock_name>
(
    .clk(<clock source>),
    .shiftnld(<shiftnld source>),
    .captnupdt(<captnupdt source>),
    .regin(<regin input source from the core>),
    .rsttimer(<input signal to reset the watchdog timer>),
    .rconfig(<input signal to initiate configuration>),
    .regout(<data output destination to core>),
);
```

```
defparam <rublock_name>.sim_init_config = <initial configuration for simulation
only>;
defparam <rublock_name>.sim_init_watchdog_value = <initial watchdog value for
simulation only>;
defparam <rublock_name>.sim_init_config = <initial status register value for
simulation only>;
```

Related Information

Remote System Upgrade Circuitry Signals on page 2-11
Provides more information about remote system upgrade signals.

Error Detection

This section covers detailed guidelines on error detection.

Verifying Error Detection Functionality

You can inject a soft error by changing the 32-bit CRC storage register in the CRC circuitry. After verifying the failure induced, you can restore the 32-bit CRC value to the correct CRC value using the same instruction and inserting the correct value. Be sure to read out the correct value before updating it with a known bad value.

In user mode, MAX 10 devices support the `CHANGE_EDREG` JTAG instruction, which allows you to write to the 32-bit storage register. You can use **.jam** to automate the testing and verification process. You can only execute this instruction when the device is in user mode. This instruction enables you to dynamically verify the CRC functionality in-system without having to reconfigure the device. You can then switch to use the CRC circuit to check for real errors induced by an SEU.

After the test completes, to clear the CRC error and restore the original CRC value, power cycle the device or follow these steps:

1. After the configuration completes, use `CHANGE_EDREG` JTAG instruction to shift out the correct precomputed CRC value and load the wrong CRC value to the CRC storage register. When an error is detected, the `CRC_ERROR` pin will be asserted.
2. Use `CHANGE_EDREG` JTAG instruction to shift in the correct precomputed CRC value. The `CRC_ERROR` pin is de-asserted to show that the error detection CRC circuitry is working.

Related Information

SEU Mitigation and Configuration Error Detection on page 2-18

Enabling Error Detection

The CRC error detection feature in the Quartus II software generates the `CRC_ERROR` output to the optional dual-purpose `CRC_ERROR` pin.

To enable the error detection feature using CRC, follow these steps:

1. Open the Quartus II software and load a project using MAX 10 device family.
2. On the **Assignments** menu, click **Settings**. The **Settings** dialog box appears.
3. In the **Category** list, select **Device**.
4. Click **Device and Pin Options**.
5. In the **Device and Pin Options** dialog box, click the **Error Detection CRC** tab.

6. Turn on **Enable error detection CRC**.
7. In the **Divide error check frequency by** field, enter a valid divisor.

   The divisor value divides down the frequency of the configuration oscillator output clock. This output clock is used as the clock source for the error detection process.
8. Click **OK**.

Related Information

SEU Mitigation and Configuration Error Detection on page 2-18

Accessing Error Detection Block Through User Interface

The error detection circuit stores the computed 32-bit CRC signature in a 32-bit register. The user logic from the core reads out this signature. The `fiftyfivenm_crcblock` primitive is a WYSIWYG component used to establish the interface from the user logic to the error detection circuit. The `fiftyfivenm_crcblock` primitive atom contains the input and output ports that must be included in the atom. To access the logic array,you must insert the `fiftyfivenm_crcblock` WYSIWYG atom into your design. The recommended clock frequency of .clk port is to follow the clock frequency of EDCRC block.

Figure 3-2: Error Detection Block Diagram with Interfaces for MAX 10 Devices

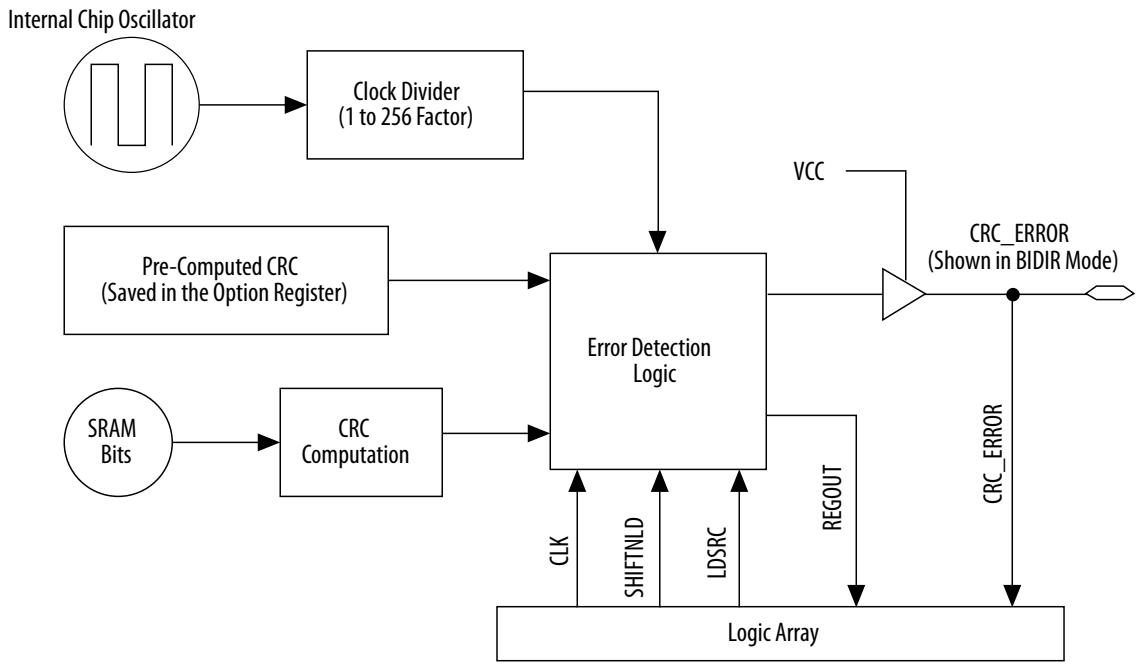

The following example shows how the input and output ports of a WYSIWYG atom are defined in the MAX 10 device.

```
fiftyfivenm_crcblock <name>
(
    .clk(<ED_CLK clock source>),
    .shiftnld(<ED_SHIFTNLD source>),
    .ldsrc (<LDSRC source>),
    .crcerror(<CRCERROR_CORE out destination>),
    .regout(<output destination>)
```

```
);
defparam <crcblock_name>.oscillator_divider = <internal oscillator division (1 to
256)>;
```

Related Information

- **SEU Mitigation and Configuration Error Detection** on page 2-18
- **Error Detection Timing** on page 2-21

Enabling Data Compression

When you enable compression, the Quartus II software generates configuration files with compressed configuration data.

A compressed configuration file is needed to use the dual configuration mode in the internal configuration scheme. This compressed file reduces the storage requirements in internal flash memory, and decreases the time needed to send the bitstream to the MAX 10 device family. There are two methods to enable compression for the MAX 10 device family bitstreams in the Quartus II software:

- Before design compilation—using the **Compiler Settings** menu.
- After design compilation—using the **Convert Programming Files** option.

Enabling Compression Before Design Compilation

To enable compression before design compilation, follow these steps:

1. On the **Assignments** menu, click **Device**. The **Settings** dialog box appears.
2. Click **Device and Pin Options**. The **Device and Pin Options** dialog box appears.
3. Click the **Configuration** tab.
4. Turn on **Generate compressed bitstreams**.
5. Click **OK**.
6. In the **Settings** dialog box, click **OK**.

Related Information

Configuration Data Compression on page 2-22

Enabling Compression After Design Compilation

To enable compression after design compilation, follow these steps:

1. On the **File** menu, click **Convert Programming Files**.
2. Under **Output programming file**, from the pull-down menu, select your desired file type.
3. If you select the Programmer Object File (**.pof**), you must specify a configuration device, directly under the file type.
4. In the **Input files to convert** box, select **SOF Data**.
5. Click **Add File** to browse to the MAX 10 device family **.sof**.
6. In the **Convert Programming Files** dialog box, select the **.pof** you added to **SOF Data** and click **Properties**.
7. In the **SOF Properties** dialog box, turn on the **Compression** option.

Related Information

Configuration Data Compression on page 2-22

AES Encryption

This section covers detailed guidelines on applying AES Encryption for design security. There are two main steps in applying design security in MAX 10 devices. First is to generate the encryption key programming (**.ekp**) file and second is to program the **.ekp** file into the device.

The **.ekp** file has other different formats, depending on the hardware and system used for programming. There are three file formats supported by the Quartus II software:

- JAM Byte Code (**.jbc**) file
- JAM™ Standard Test and Programming Language (STAPL) Format (**.jam**) file
- Serial Vector Format (**.svf**) file

Only the **.ekp** file type generated automatically from the Quartus II software. You must create the **.jbc**, **.jam** and **.svf** files using the Quartus II software if these files are required in the key programming.

Note: Altera recommends that you keep the **.ekp** file confidential.

Generating .ekp File and Encrypt Configuration File

To generate the **.ekp** file and encrypt your configuration file, follow these steps:

1. On the **File** menu, click **Convert Programming Files**.
2. Under **Output programming file**, select **Programmer Object File** (**.pof**) in the **Programming file type** list.
3. In the **Mode** list, select **Internal Configuration**.
4. Click **Option/Boot Info** and the **ICB setting** dialog box will appear.
5. You can enable the enable the **Allow encrypted POF** only option. Click **OK** once ICB setting is set.

   The device will only accept encrypted bitstream during internal configuration if this option is enabled. If you encrypt one of CFM0, CFM1 or CFM2 only, the Programmer will post a warning.
6. Type the file name in the **File name** field, or **browse** to and select the file.
7. Under the **Input files to convert** section, click **SOF Data**.
8. Click **Add File** to open the **Select Input File** dialog box.
9. Browse to the unencrypted **.sof** and click **Open**.
10. Under the **Input files to convert** section, click on the added **.sof**.
11. Click **Properties** and the **SOF Files Properties: Bitstream Encryption** dialog box will appear.
12. Turn on **Generate encrypted bitstream**.
13. Turn on **Generate key programming file** and type the **.ekp** file path and file name in the text area, or browse to and select **<filename>.ekp**.
14. You can the key with either a **.key** file or entering the key manually.

    Note: MAX 10 devices require the entry of 128-bit keys.

- Adding key with a **.key** file.

  The **.key** file is a plain text file in which each line represents a key unless the line starts with "#". The "#" symbol is used to denote comments. Each valid key line has the following format:

```
<key identity><white space><128-bit hexadecimal key>
# This is an example key file
key1 0123456789ABCDEF0123456789ABCDEF
```

  1. Enable the **Use key file** checkbox.
  2. Click **Open** and add the desired **.key** file and click **Open** again.
  3. Under **Key entry** part, the key contained in the **.key** file will be selected in the drop-down list.
  4. Click **OK**.
- Entering you key manually.
  1. Under **Key entry** part, click the **Add** button.
  2. Select the **Key Entry Method** to enter the encryption key either with the **On-screen Keypad** or **Keyboard**.
  3. Enter a key name in the **Key Name (alphanumeric)** field.
  4. Key in the desired key in the **Key (128-bit hexadecimal)** field and repeat in the **Confirm Key** field below it.
  5. Click **OK**.

15. Read the design security feature disclaimer. If you agree, turn on the **acknowledgment** box and click **OK**.
16. In the **Convert Programming Files** dialog box, click **OK**. The **<filename>.ekp** and encrypted configuration file will be generated in the same project directory.

    Note: For dual configuration **.pof** file, both **.sof** file need to be encrypted with the same key.The generation of key file and encrypted configuration file will not be successful if different keys are used.

Generating .jam/.jbc/.svf file from .ekp file

To generate **.jam**/**.jbc**/**.svf** file from **.ekp** file, follow these steps:

1. On the **Tools** menu, click **Programmer** and the **Programmer** dialog box will appear.
2. In the **Mode** list, select **JTAG** as the programming mode.
3. Click **Hardware Setup**. The **Hardware Setup** dialog box will appear.
4. Select **USBBlaster** as the programming hardware in the **currently selected hardware list** and click **Done**.
5. Click **Add File** and the **Select Programmer File** dialog box will appear.
6. Type `<filename>.ekp` in the **File name** field and click **Open**.
7. Select the .ekp file you added and click **Program/Configure**.
8. On the **File** menu, point to **Create/Update** and click **Create JAM, SVF, or ISC File**. The **Create JAM, SVF, or ISC File** dialog box will appear.
9. Select the file format required for the **.ekp** file in the **File format** field.

- JEDEC STAPL Format (**.jam**)
- Jam STAPL Byte Code (**.jbc**)
- Serial Vector Format (**.svf**)

10. Type the file name in the **File name** field, or browse to and select the file.
11. Click **OK** to generate the **.jam**, **.jbc** or **.svf** file.

Programming .ekp File and Encrypted POF File

There are two methods to program the encrypted **.pof** and **.ekp** file:

- Program the **.ekp** and **.pof** separately.
- Integrate the **.ekp** into **.pof** and program both altogether.

Programming .ekp File and Encrypted .pof Separately

To program the **.ekp** and encrypted **.pof** separately using the Quartus II software, follow these steps:

1. In the Quartus II Programmer, under the **Mode** list, select **JTAG** as the programming mode.
2. Click **Hardware Setup** and the **Hardware Setup** dialog box will appear.
3. Select **USBBlaster** as the programming hardware in the **Currently selected hardware** list and click **Done**.
4. Click **Add File** and the **Select Programmer File** dialog box will appear.
5. Type `<filename>.ekp` in the **File name** field and click **Open**.
6. Select the **.ekp** file you added and click **Program/Configure**.
7. Click **Start** to program the key.

   Note: The Quartus II software message window provides information about the success or failure of the key programming operation. Once the **.ekp** is programmed, **.pof** can be programmed separately. To retain the security key in the internal flash that had been programmed through the **.ekp**, continue with the following steps.
8. Select the **.ekp** to be programmed to the selected device.
9. Check only the functional block that need to be updated at child level. Do not check operation at the parent level when using Programmer GUI.
10. After all settings are set, click **Start** to start programming.

Integrate the .ekp into .pof Programming

To integrate the **.ekp** into **.pof** and program both altogether using the Quartus II software, follow these steps:

1. In the Quartus II Programmer, under the **Mode** list, select **JTAG** as the programming mode.
2. Click **Hardware Setup** and the **Hardware Setup** dialog box will appear.
3. Select **USBBlaster** as the programming hardware in the **Currently selected hardware** list and click **Done**.
4. Click the **Auto Detect** button on the left pane.
5. Select the **.pof** you wish to program to the device.
6. Select the **<yourpoffile.pof>**, `right click` and select **Add EKP File** to integrate **.ekp** file with the **.pof** file.

Once the **.ekp** is integrated into the **.pof**, you can to save the integrated **.pof** into a new **.pof**. This newly saved file will have original **.pof** integrated with **.ekp** information.

7. Select the **<yourpoffile.pof>** in the **Program/Configure** column.
8. After all settings are set, click **Start** to start programming

Encryption in Internal Configuration

During internal configuration, the FPGA decrypts the **.pof** with the stored key and uses the decrypted data to configure itself. The configuration image loaded during configuration is also affected by the encryption settings and the **Auto-reconfigure from secondary image when initial image fails** setting.

Table 3-3: Configuration Image Outcome Based on Encryption Settings, Encryption Key and CONFIG_SEL Pin Settings

Table shows the scenario when **Auto-reconfigure from secondary image when initial image fails** is enabled.

Configuration Image Mode	CFM0 (image 0) Encryption Key	CFM1 (image 1) Encryption Key	Key Stored in the Device	Allow Encrypted POF Only	CONFIG_SEL pin	Design Loaded After Power-up
Single	Not Encrypted	Not Available	No key	Disabled	0	image 0
Single	Not Encrypted	Not Available	No key	Disabled	1	image 0
Single	Not Encrypted	Not Available	Key X	Disabled	0	image 0
Single	Not Encrypted	Not Available	Key X	Disabled	1	image 0
Single	Not Encrypted	Not Available	Key X	Enabled	0	Configuration Fail
Single	Not Encrypted	Not Available	Key X	Enabled	1	Configuration Fail
Single	Key X	Not Available	No key	Enabled	0	Configuration Fail
Single	Key X	Not Available	No key	Enabled	1	Configuration Fail
Single	Key X	Not Available	Key X	Enabled	0	image 0
Single	Key X	Not Available	Key X	Enabled	1	image 0
Single	Key X	Not Available	Key Y	Enabled	0	Configuration Fail
Single	Key X	Not Available	Key Y	Enabled	1	Configuration Fail
Dual	Not Encrypted	Not Encrypted	No key	Disabled	0	image 0
Dual	Not Encrypted	Not Encrypted	No key	Disabled	1	image 1
Dual	Key X	Not Encrypted	No key	Disabled	0	image 1[8]
Dual	Key X	Not Encrypted	No key	Disabled	1	image 1
Dual	Key X	Not Encrypted	Key X	Disabled	0	image 0
Dual	Key X	Not Encrypted	Key X	Disabled	1	image 1
Dual	Key X	Not Encrypted	Key X	Enabled	0	image 0
Dual	Key X	Not Encrypted	Key X	Enabled	1	image 0

(8) After image 0 configuration failed, device will automatically load image 1.
(9) After image 1 configuration failed, device will automatically load image 0.

Configuration Image Mode	CFM0 (image 0) Encryption Key	CFM1 (image 1) Encryption Key	Key Stored in the Device	Allow Encrypted POF Only	CONFIG_SEL pin	Design Loaded After Power-up
Dual	Key X	Not Encrypted	Key Y	Enabled	0	Configuration Fail
Dual	Key X	Not Encrypted	Key Y	Enabled	1	Configuration Fail
Dual	Key X	Key X	No key	Enabled	0	Configuration Fail
Dual	Key X	Key X	No key	Enabled	1	Configuration Fail
Dual	Key X	Key X	Key X	Enabled	0	image 0
Dual	Key X	Key X	Key X	Enabled	1	image 1
Dual	Key X	Key Y	Key X	Enabled	0	image 0(9)
Dual	Key X	Key Y	Key X	Enabled	1	image 0
Dual	Key Y	Key Y	Key Y	Enabled	0	image 0
Dual	Key Y	Key Y	Key Y	Enabled	1	image 1(9)
Dual	Key X	Key Y	Key Y	Enabled	0	image 1
Dual	Key X	Key Y	Key Y	Enabled	1	image 1

Table 3-4: Configuration Image Outcome Based on Encryption Settings and Encryption Key

Table shows the scenario when **Auto-reconfigure from secondary image when initial image fails** is disabled. If this setting is disabled, device will always load image 0.

CFM0 (image 0) Encryption Key	Key Stored in the Device	Allow Encrypted POF Only	Design Loaded After Power-up
Not Encrypted	No key	Disabled	image 0
Not Encrypted	Key X	Disabled	image 0
Not Encrypted	Key Y	Disabled	image 0
Not Encrypted	No key	Enabled	Configuration Fail
Not Encrypted	Key X	Enabled	Configuration Fail
Not Encrypted	Key Y	Enabled	Configuration Fail
Key X	No key	Disabled	Configuration Fail
Key X	Key X	Disabled	image 0
Key X	Key Y	Disabled	Configuration Fail
Key X	No key	Enabled	Configuration Fail
Key X	Key X	Enabled	image 0
Key X	Key Y	Enabled	Configuration Fail
Key Y	No key	Disabled	Configuration Fail
Key Y	Key X	Disabled	Configuration Fail
Key Y	Key Y	Disabled	image 0l

CFM0 (image 0) Encryption Key	Key Stored in the Device	Allow Encrypted POF Only	Design Loaded After Power-up
Key Y	No key	Enabled	Configuration Fail
Key Y	Key X	Enabled	Configuration Fail
Key Y	Key Y	Enabled	image 0

MAX 10 FPGA Configuration IP Core Implementation Guides

4

2015.06.15

UG-M10CONFIG

Subscribe Send Feedback

Altera Unique Chip ID IP Core

This section provides the guideline to implement the Altera Unique Chip ID IP Core.

Related Information

- **Unique Chip ID** on page 2-16
- **Altera Unique Chip ID IP Core Ports** on page 6-1

Instantiating the Altera Unique Chip ID IP Core

To instantiate the Altera Unique Chip ID IP Core, follow these steps:

1. On the Tools menu of the Quartus II software, click **IP Catalog.**
2. Under the Library category, expand the Basic Functions and Configuration Programming.
3. Select **Altera Unique Chip ID** and click **Add**, and enter your desired output file name
4. In the Save IP Variation dialog box:
   - Set your IP variation filename and directory.
   - Select IP variation file type.
5. Click **Finish**.

Resetting the Altera Unique Chip ID IP Core

To reset the Altera Unique Chip ID IP core, you must assert high to the `reset` signal for at least one clock cycle. After you de-assert the `reset` signal, the Altera Unique Chip ID IP core re-reads the unique chip ID of your device from the fuse ID block. The Altera Unique Chip ID IP core asserts the `data_valid` signal after completing the operation.

Altera Dual Configuration IP Core

This section provides the guideline to implement the Altera Dual Configuration IP Core.

© 2015 Altera Corporation. All rights reserved. ALTERA, ARRIA, CYCLONE, ENPIRION, MAX, MEGACORE, NIOS, QUARTUS and STRATIX words and logos are trademarks of Altera Corporation and registered in the U.S. Patent and Trademark Office and in other countries. All other words and logos identified as trademarks or service marks are the property of their respective holders as described at www.altera.com/common/legal.html. Altera warrants performance of its semiconductor products to current specifications in accordance with Altera's standard warranty, but reserves the right to make changes to any products and services at any time without notice. Altera assumes no responsibility or liability arising out of the application or use of any information, product, or service described herein except as expressly agreed to in writing by Altera. Altera customers are advised to obtain the latest version of device specifications before relying on any published information and before placing orders for products or services.

ISO 9001:2008 Registered

101 Innovation Drive, San Jose, CA 95134

Instantiating the Altera Dual Configuration IP Core

To instantiate the Altera Dual Configuration IP Core, follow these steps:

1. On the Tools menu of the Quartus II software, click **IP Catalog.**
2. Under the Library category, expand the Basic Functions and Configuration Programming.
3. Select **Altera Dual Configuration** and after clicking **Add**, the IP Parameter Editor appears.
4. In the New IP Instance dialog box:
   - Set the top-level name of your IP.
   - Select the Device family.
   - Select the Device
5. Click **OK**.

Altera Dual Configuration IP Core References

5

2015.06.15

UG-M10CONFIG Subscribe Send Feedback

Related Information

AN 741: Remote System Upgrade for MAX 10 FPGA Devices over UART with the Nios II Processor
Provides reference design for remote system upgrade in MAX 10 FPGA devices.

Altera Dual Configuration IP Core Avalon-MM Address Map

Table 5-1: Altera Dual Configuration IP Core Avalon-MM Address Map for MAX 10 Devices

- Altera recommends you to set the reserve bits to `0` for write operations. For read operations, the IP core will always generate `0` as the output.
- Write `1` to trigger any operation stated in the description.
- You need to trigger the desired operation from offset 2 before any read operation of offset 4, 5, 6 and 7.

Offset	R/W	Width (Bits)	Description
0	W	32	• Bit 0—trigger reconfiguration. • Bit 1—reset the watchdog timer. • Bit 31:2—reserved. Signals are triggered at the same write cycle on Avalon.
1	W	32	• Bit 0—trigger `config_sel_overwrite` to the input register. • Bit 1—writes `config_sel` to the input register. Set 0 or 1 to load from configuration image 0 or 1 respectively. • Bit 31:2—reserved. The `busy` signal is generated right after the write cycle, while the configuration image information is registered. Once `busy` signal is high, writing to this address is ignored until the process is completed and the `busy` signal is de-asserted.

© 2015 Altera Corporation. All rights reserved. ALTERA, ARRIA, CYCLONE, ENPIRION, MAX, MEGACORE, NIOS, QUARTUS and STRATIX words and logos are trademarks of Altera Corporation and registered in the U.S. Patent and Trademark Office and in other countries. All other words and logos identified as trademarks or service marks are the property of their respective holders as described at www.altera.com/common/legal.html. Altera warrants performance of its semiconductor products to current specifications in accordance with Altera's standard warranty, but reserves the right to make changes to any products and services at any time without notice. Altera assumes no responsibility or liability arising out of the application or use of any information, product, or service described herein except as expressly agreed to in writing by Altera. Altera customers are advised to obtain the latest version of device specifications before relying on any published information and before placing orders for products or services.

ISO 9001:2008 Registered

Offset	R/W	Width (Bits)	Description
2	W	32	• Bit 0—trigger read operation from the user watchdog. • Bit 1—trigger read operation from the previous state application 2 register. • Bit 2—trigger read operation from the previous state application 1 register. • Bit 3—trigger read operation from the input register. • Bit 31:4—reserved. The `busy` signal is generated right after the write cycle.
3	R	32	• Bit 0—IP `busy` signal. • Bit 31:1—reserved. The `busy` signal indicates the Dual Configuration IP core is in the writing or reading process. In this state, all write operation to the remote system upgrade block registers operation request are ignored except for triggering the reset timer. Altera recommends you to pull this `busy` signal once you triggered any read or write process.
4	R	32	• Bit 11:0—user watchdog value.(10) • Bit 12—current state of the user watchdog. • Bit 16:13—`msm_cs` value of the current state. • Bit 31:17—reserved.
5	R	32	• Bit 3:0—previous state application 1 reconfiguration source value from the *Remote System Upgrade Status Register—Previous StateBit for MAX 10 Devices* table. • Bit 7:4—`msm_cs` value of the previous state application 1. • Bit 31:8—reserved.
6	R	32	• Bit 3:0—previous state application 2 reconfiguration source value from the *Remote System Upgrade Status Register—Previous StateBit for MAX 10 Devices* table. • Bit 7:4—`msm_cs` value of the previous state application 2. • Bit 31:8—reserved.
7	R	32	• Bit 0—`config_sel_overwrite` value from the input register. • Bit 1—`config_sel` value of the input register.(11) • Bit 31:2—reserved.

(10) You can only read the 12 most significant bit of the 29 bit user watchdog value using Dual Configuration IP Core.
(11) Reads the `config_sel` of the input register only. It will not reflect the physical CONFIG_SEL pin setting.

Related Information

- **Altera Dual Configuration IP Core** on page 2-14
- **Avalon Interface Specifications**
  Provides more information about the Avalon-MM interface specifications applied in Altera Dual Configuration IP Core.
- **Instantiating the Altera Dual Configuration IP Core** on page 4-2
- **Accessing the Remote System Upgrade Block Through User Interface** on page 3-7
- **Remote System Upgrade Status Registers** on page 2-13
  The Remote System Upgrade Status Register—Previous StateBit for MAX 10 Devices table provides more information about previous state applications reconfiguration sources.

Altera Dual Configuration IP Core Parameters

Table 5-2: Altera Dual Configuration IP Core Parameter for MAX 10

Parameter	Value	Description
Clock frequency	Up to 80MHz	Specifies the number of cycle to assert `RU_nRSTIMER` and `RU_nCONFIG` signals. Note that maximum `RU_CLK` is 40Mhz, Altera Dual Configuration IP Core has restriction to run at 80Mhz maximum, which is twice faster than hardware limitation. This is because Altera Dual Configuration IP Core generate `RU_CLK` at half rate of the input frequency.

Altera Unique Chip ID IP Core References

6

2015.06.15

UG-M10CONFIG Subscribe Send Feedback

Altera Unique Chip ID IP Core Ports

Table 6-1: Altera Unique Chip ID IP Core Ports

Port	Input/Output	Width (Bits)	Description
`clkin`	Input	1	• Feeds clock signal to the unique chip ID block. The maximum supported frequency is 100 MHz. • When you provide a clock signal, the IP core reads the value of the unique chip ID and sends the value to the `chip_id` output port.
`reset`	Input	1	• Resets the IP core when you assert the `reset` signal to high for at least one clock cycle. • The `chip_id [63:0]`output port holds the value of the unique chip ID until you reconfigure the device or reset the IP core.
`data_valid`	Output	1	• Indicates that the unique chip ID is ready for retrieval. If the signal is low, the IP core is in initial state or in progress to load data from a fuse ID. • After the IP core asserts the signal, the data is ready for retrieval at the `chip_id[63..0]` output port.
`chip_id`	Output	64	• Indicates the unique chip ID according to its respective fuse ID location. The data is only valid after the IP core asserts the `data_valid` signal. • The value at power-up resets to `0`.

© 2015 Altera Corporation. All rights reserved. ALTERA, ARRIA, CYCLONE, ENPIRION, MAX, MEGACORE, NIOS, QUARTUS and STRATIX words and logos are trademarks of Altera Corporation and registered in the U.S. Patent and Trademark Office and in other countries. All other words and logos identified as trademarks or service marks are the property of their respective holders as described at www.altera.com/common/legal.html. Altera warrants performance of its semiconductor products to current specifications in accordance with Altera's standard warranty, but reserves the right to make changes to any products and services at any time without notice. Altera assumes no responsibility or liability arising out of the application or use of any information, product, or service described herein except as expressly agreed to in writing by Altera. Altera customers are advised to obtain the latest version of device specifications before relying on any published information and before placing orders for products or services.

ISO 9001:2008 Registered

Additional Information for MAX 10 FPGA Configuration User Guide

A

2015.06.15

UG-M10CONFIG Subscribe Send Feedback

Document Revision History for MAX 10 FPGA Configuration User Guide

Date	Version	Changes
June 2015	2015.06.15	• Added related information link to AN 741: Remote System Upgrade for MAX 10 FPGA Devices over UART with the Nios II Processor in*Altera Dual Configuration IP Core References* and *Remote System Upgrade in Dual Compressed Images*. • Added pulse holding requirement time for `RU_nRSTIMER` in *Remote System Upgrade Circuitry Signals for MAX 10 Devices* table. • Added link to *Remote System Upgrade Status Register—Previous State Bit for MAX 10 Devices* table for related entries in *Altera Dual Configuration IP Core Avalon-MM Address Map for MAX 10 Devices* table.

© 2015 Altera Corporation. All rights reserved. ALTERA, ARRIA, CYCLONE, ENPIRION, MAX, MEGACORE, NIOS, QUARTUS and STRATIX words and logos are trademarks of Altera Corporation and registered in the U.S. Patent and Trademark Office and in other countries. All other words and logos identified as trademarks or service marks are the property of their respective holders as described at www.altera.com/common/legal.html. Altera warrants performance of its semiconductor products to current specifications in accordance with Altera's standard warranty, but reserves the right to make changes to any products and services at any time without notice. Altera assumes no responsibility or liability arising out of the application or use of any information, product, or service described herein except as expressly agreed to in writing by Altera. Altera customers are advised to obtain the latest version of device specifications before relying on any published information and before placing orders for products or services.

ISO 9001:2008 Registered

101 Innovation Drive, San Jose, CA 95134

Date	Version	Changes
May 2015	2015.05.04	• Rearranged and updated Configuration Setting names 'Initialization Configuration Bits for MAX 10 Devices' table. • Updated 'High-Level Overview of Internal Configuration for MAX 10 Devices' figure with JTAG configuration and moved the figure to 'Configuration Schemes' section. • Added link to corresponding description of configuration settings in 'Initialization Configuration Bits for MAX 10 Devices' table. • Updated the default watchdog time value from hexadecimal to decimal value in 'Initialization Configuration Bits for MAX 10 Devices' table. • Updated the ISP data description in 'Initialization Configuration Bits for MAX 10 Devices' table. • Updated 'User Watchdog Timer' by adding time-out formula. • Added link to 'User Watchdog Internal Circuitry Timing Specifications' in MAX 10 FPGA Device Datasheet. • Added footnote to indicate that JTAG secure is disabled by default and require Altera support to enable in 'Initialization Configuration Bits for MAX 10 Devices' table. • Updated minimum and maximum CRC calculation time for divisor 2. • Updated remote system upgrade flow diagram. • Updated 'Encryption in Internal Configuration' table by adding 'Key' terms and changed Image 1 and Image 2 to Image 0 and Image 1 respectively. • Added footnote to 'Encryption in Internal Configuration' to indicate auto-reconfiguration when image fails. • Added formula to calculate minimum and maximum CRC calculation time for other than divisor 2. • Added caution when JTAG Secure is turned on. • Added information about auto-generated .pof for certain type of internal configuration modes. • Added .pof and ICB setting guide through Device and Pin Options and convert programming file. • Added configuration RAM (CRAM) in 'Overview' • Editorial changes.
December 2014	2014.12.15	• Rename BOOT_SEL pin to CONFIG_SEL pin. • Update Altera IP Core name from Dual Boot IP Core to Altera Dual Configuration IP Core. • Added information about the AES encryption key part of ICB. • Added encryption feature guidelines. • Updated ICB settings options available in 14.1 release. • Updated Programmer options on CFM programming available in 14.1 release.

Date	Version	Changes
September 2014	2014.09.22	Initial release.