Instruction Manual



Electrical Actuator Unit Type EA 05

GEORGE FISCHER +GF+

Table of Contents

	page
1. General	19
2. Design of the actuator	20
2.1 Wiring diagram standard version	21
3. Specifications	21
4. Installation of the actuator	22
5. Dimensions	23
6. Spare parts list	23

The technical data are not binding. They are not warranted characteristics and are subject to change. Please consult our General Conditions of Supply.

1. General

This instruction manual contains all the information regarding design, installation and start-up procedure for the electrical actuator unit type EA 05.

Warnings:

- Do not work on this unit before disconnecting it from the mains!
- Electric actuators do not have a safety position. In case of a mains breakdown the actuator resp. the valve remains in its actual position.
- Any work done on the actuator may only be carried out by authorized and trained personnel.
- These products are according to the Machine Guidelines 89/392/EWG, not regarded as machines; they are, however, built into installations which are regarded as machines.

Note
We distinctly emphasize that operation is prohibited until it has been confirmed that the machine (plant) into which the products have been built corresponds to the conditions of the EC Machine Guidelines 89/392/EWG.

CE

2. Design of the actuator

The standard version of the electrical actuator EA 05 consists of the following elements: spurwheel gear, electric motor, as well as components for limit positioning and signalisation.

1 Manual lever/position indicator
2 Unit plug for motor control
3 Unit plug for limit switches S3, S4
4 Change over lever for automatic/manual

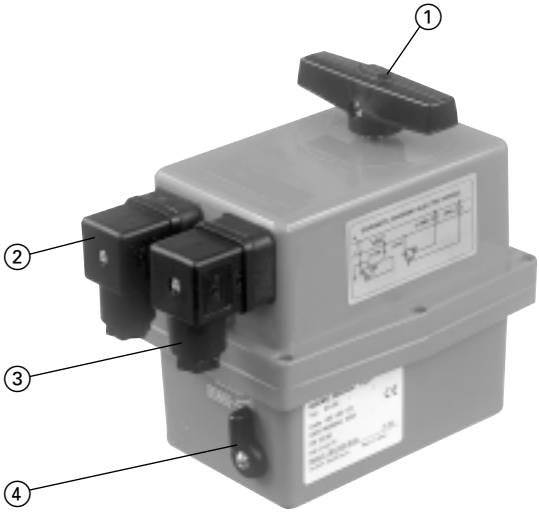

1 DC-Motor
2 Fuse F1
3 Fuse F2
4 Limit switches S1–S4
5 Main connection
6 Plug for S3, S4

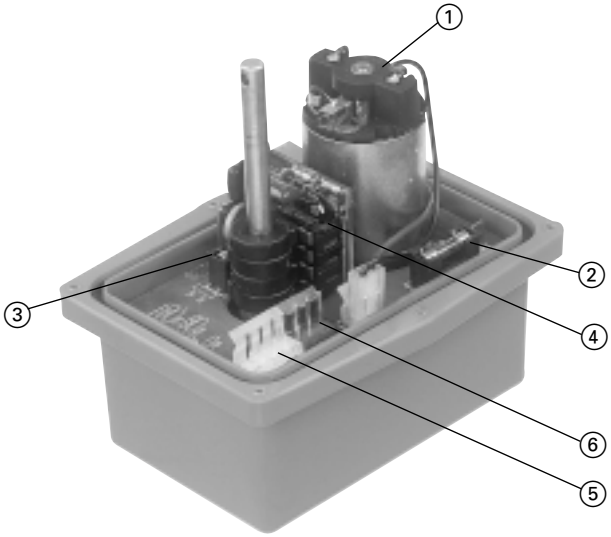

2.1 Wiring Diagram standard version

Actuator is in the «closed» position

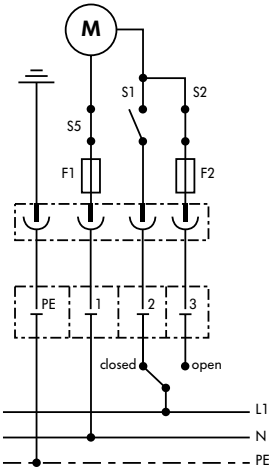

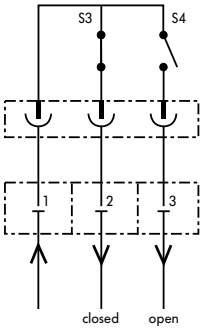

Installation
Limit switches

S4
S3
S2
S1

S5: Change over
manual/automatic

3. Specifications

Nominal voltage	24 V, 115 V or 230 V, 50–60 Hz
Rated performance	35 VA
Protection class	IP 65 according to DIN 40050
Duty cycle	35% at TA 25 °C
Nominal torque	15 Nm
Operating time	10 sec/90° <
Operating angle	set at 90°
Ambient temperature	0° to +50 °C
Flange connections	ISO 5211 / F 05
Position indicator	visual
Accessories	Additional 2 auxiliary switches and manual override integrated
Housing material	Polyamid (Nylon)
Electrical connection	unit plug 3 P+E according to DIN 43650
Weight	1,2 kg

4. Installation of the actuator

Warning:
Before the actuator is connected to the mains, it must be checked that the electrical connections are correct.
(see Item 2.1).

Adjustments
If a complete actuated valve is being supplied by George Fischer, no further adjustments are necessary. If the customer assembles the unit or after a repair, the end position must be checked and if necessary adjusted. Adjustments can only be done on dismounted valves.

Limit switch positions
Switch S2 opens at «open» position
Switch S1 opens at «closed» position
(see page 5)

5. Dimensions

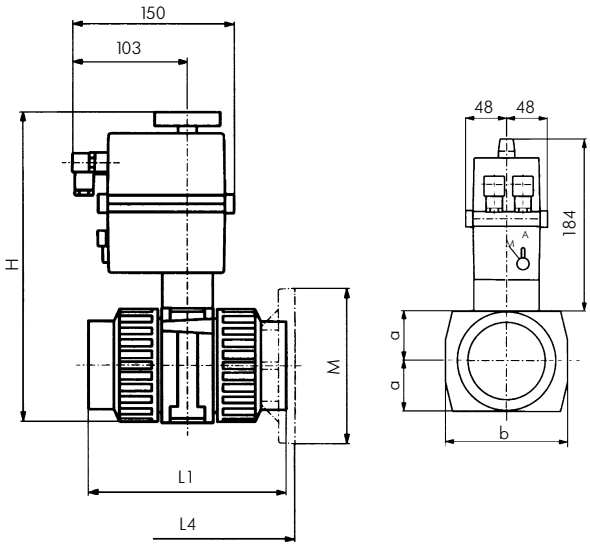

d	DN				Solvent cement socket ISO/DIN Fusion socket ISO/DIN			Fixed flange ISO/DIN			
						PVC	PP/PVDF				
mm	mm	Inch	a mm	b mm	H mm	L1 mm	L1 mm	H mm	L4 mm	M mm	Weight kg
16	10	3/8	24	118	232	99	98	–	–	–	1,8
20	15	1/2	24	118	232	102	101	232	130	95	1,9
25	20	3/4	29	118	242	120	119	242	150	105	2,0
32	25	1	34	118	252	131	130	252	160	115	2,3
40	32	1 1/4	43	118	270	150	149	270	180	140	2,7
50	40	1 1/2	50	118	284	163	162	284	200	150	3,1
63	50	2	61	130	306	197	195	306	230	165	4,1

6. Spare parts list

d	DN		Intermediate kit	Actuator 230 V 50–60Hz	Actuator 115 V 50–60Hz	Actuator 24 V 50–60Hz
mm	mm	Inch				
16	10	3/8	**198 000 260**			
20	15	1/2	**198 000 260**			
25	20	3/4	**198 000 261**			
32	25	1	**198 000 262**	**198 150 722**	**198 150 723**	**198 150 724**
40	32	1 1/4	**198 000 263**			
50	40	1 1/2	**198 000 264**			
63	50	2	**198 000 265**			

Part-numbers for ball valves see special documentation type 346

GEORG FISCHER +GF+

A Georg Fischer Rohrleitungssysteme GmbH, Sandgasse 16, 3130 Herzogenburg
Tel. +43(0)2782/8 56 43-0, Fax +43(0)2782/8 51 56, e-mail: office@georgfischer.at

AUS George Fischer Pty. Ltd., 4 Jacks Road, South Oakleigh, Victoria 3167
Tel. +61(0)3/95 63 88 99, Fax +61(0)3/95 63 89 66, e-mail: sales@georgefischer.com.au

B/L Georg Fischer NV/SA, Digue du Canal 109-111 – Vaartdijk 109-111, 1070 Bruxelles/Brüssel
Tél. +32(0)2/556 40 20, Fax +32(0)2/524 34 26, e-mail: info.be@be.piping.georgfischer.com

CH Georg Fischer Rohrleitungssysteme (Schweiz) AG, Amsler-Laffon-Strasse 1, Postfach, 8201 Schaffhausen
Tel. +41(0)52/631 30 26, Fax +41(0)52/631 28 97, e-mail: info@rohrleitungssysteme.georgfischer.ch

CHINA Georg Fischer Piping Systems Ltd. Shanghai, No. 218 Kang Qiao Dong Rd., Shanghai 201319
Tel. +86(0)21/58 13 33 33, Fax +86(0)21/58 13 33 66, e-mail: gfsro@public.shanghai.cngb.com

D Georg Fischer GmbH, Daimlerstraße 6, 73095 Albershausen
Tel. +49(0)7161/302-0, Fax +49(0)7161/302 259, e-mail: info@georgfischer.de, Internet: http://www.rls.georgfischer.de
Georg Fischer DEKA GmbH, Postfach 1145, 35228 Dautphetal, Tel. +49(0)6468/91 51-0, Fax +49(0)6468/91 52 21/22
e-mail: info@dekapipe.de

DK/IS Georg Fischer A/S, Klintehøj Vænge 17, 3460 Birkerød, Tel. +45 45 81 19 75, Fax +45 45 81 16 22

E Georg Fischer S.A., Sistemas de tuberías para la industria, Alcalá, 85, 2º, 28009 Madrid
Tel. +34(0)91/781 98 90, Fax +34(0)91/426 08 23, e-mail: info@georgfischer.es

F George Fischer S.A., 105–113, rue Charles Michels, 93208 Saint-Denis Cedex 1
Tél. +33(0)1/49 22 13 41, Fax +33(0)1/49 22 13 00, e-mail: info@georgefischer.fr

GB George Fischer Sales Limited, Paradise Way, Coventry, CV2 2ST, Tel. +44(0)2476/535 535, Fax +44(0)2476/530 450
e-mail: info@georgefischer.co.uk, Internet: http://www.georgefischer.co.uk

I Georg Fischer S.p.A., Via Sondrio 1, 20063 Cernusco S/N (MI), Tel. +3902/92 18 61, Fax +3902/92 14 07 85
e-mail: office@piping.georgfischer.it

J Kubota George Fischer Ltd., 2-47, Shikitsuhigashi, 1-chome, Naniwa-ku, Osaka 556-8601
Tel. +81(0)6/6648 25 62, Fax +81(0)6/6648 25 65, e-mail: kgf-yosi@kubota.co.jp

N Georg Fischer AS, Rudsletta 97, 1351 Rud, Tel. +47(0)67/17 17 40, Fax +47(0)67/13 92 92

NL Georg Fischer N.V., Lange Veenteweg 19, Postbus 35, 8160 AA Epe
Tel. +31(0)578/678222, Fax +31(0)578/621768, e-mail: info.vgnl@nl.piping.georgfischer.com
Internet: http://www.georgfischer.nl

PL Georg Fischer Sp. z o.o., ul. Radiowa 1A, 01-485 Warszawa, Tel. +48(0)22/638 91 39, Fax +48(0)22/638 00 94

S/FIN Georg Fischer AB, Box 113, 12523 Älvsjö-Stockholm, Tel. +46(0)8/727 47 00, Fax +46(0)8/749 23 70
e-mail: info@georgfischer.se, Internet: http://www.georgfischer.se

SGP George Fischer Pte. Ltd., 15 Kaki Bukit Road 2, KB Warehouse Complex, 417 845 Singapore/Singapore
Tel. +65(0)7/47 06 11, Fax +65(0)7/47 05 77, e-mail: info@georgfischer.com.sg

USA George Fischer Inc., 2882 Dow Avenue, Tustin, CA 92780-7285
Tel. +1(0)714/731 88 00, Toll Free 800/854 40 90, Fax +1(0)714/731 46 88
e-mail: info@us.piping.georgefischer.com, Internet: http://www.us.piping.georgefischer.com

Export Georg Fischer Rohrleitungssysteme AG, Ebnatstrasse 111, Postfach, CH-8201 Schaffhausen
Tel. +41(0)52/631 11 11, Fax +41(0)52/631 28 93/631 28 58
e-mail: export@piping.georgfischer.com, Internet: http://www.piping.georgfischer.com

198 150 423
Fi 5582/ 1,2,4, (2.01) 2000

© Georg Fischer Rohrleitungssysteme AG, CH-8201 Schaffhausen/Schweiz, 2001

Printed in Switzerland