H3C S5560EI-CMW710-R1117

Copyright © 2015

Release 1117 1
1 —ICMP-jitter 1
1.1 ICMP-jitter 1
1.2 ICMP-jitter 2
2 UDP-tracert 3
2.1 UDP-tracert 3
2.2 UDP-tracert 4
2.2.1 destination host 4
2.2.2 data-size UDP-tracert test type view 5
2.2.3 no-fragment enable 5
2.2.4 max-failure 6
2.2.5 init-ttl 7
3 7
3.1 7
3.2 8
3.2.1 out interface 8
4 — 9
4.1 9
4.2 9
4.2.1 reaction trigger per-probe 9
5 —TCP Half Open NQA 10
5.1 TCP Half Open NQA 10
5.2 TCP Half Open NQA 11
6 —UDP NQA 11
6.1 UDP NQA 11
6.2 UDP NQA 12
7 —HTTPS NQA 13
7.1 HTTPS NQA 13
7.2 HTTPS NQA 14
8 —SSL NQA 15
8.1 SSL NQA 15
8.2 SSL NQA 15

17.2 27
17.2.1 -mac-authenticationtimer 27
18 MFF 27
18.1 27
18.2 28
19 —ICMP-echo 28
19.1 28
19.2 28
20 —SNMP 28
20.1 28
20.2 28
20.3 - community read 28
21 — 29
21.1 29
21.2 29
22 —NQA 29
22.1 29
22.2 30
23 —NQA 30
23.1 30
23.2 30
24 —ICMP NQA 30
24.1 30
24.2 30
25 —HTTP NQA 30
25.1 30
25.2 31
26 — 31
26.1 31
26.2 31
26.2.1 -next-hop 31
Release 1115 32
Release 1114 33
1 — TCP 33
1.1 TCP 33

1.2 TCP 34
1.2.1 peer source-address 34
2 — MAC Guest VLAN 36
2.1 MAC Guest VLAN 36
2.2 MAC Guest VLAN 36
2.2.1 mac-authentication guest-vlan auth-period 36
3 — MAC 37
3.1 MAC 37
3.2 MAC 37
3.2.1 mac-authentication offline-detect enable 37
4 — 38
4.1 38
4.2 38
4.2.1 configuration commit 38
4.2.2 configuration commit delay 39
5 — ARP Detection 40
5.1 ARP Detection 40
5.2 ARP Detection 40
5.3 ARP Detection 40
5.3.1 arp detection log enable 40
6 — 41
6.1 41
6.2 41
6.2.1 -duplex 41
Release 1113 42
1 — 42
1.1 42
1.2 42
1.3 arp mode uni 42
2 — BGP 43
2.1 BGP 43
2.2 BGP 44
2.2.1 log-route-flap 44
3 NETCONF 45
3.1 NETCONF 45
3.2 NETCONF 46

3.2.1 netconf idle-timeout ····· 46
4 OpenFlow QINQ ····· 46
4.1 QINQ ····· 46
4.2 QINQ ····· 47
4.2.1 qinq-network enable ····· 47
5 — ····· 47
5.1 ····· 47
5.2 ····· 48
5.2.1 -link-aggregation lacp traffic-redirect-notification enable ····· 48
6 802.1X ····· 48
6.1 ····· 48
6.2 ····· 48
6.2.1 -dot1x timer ····· 48
7 802.1X VLAN Tag ····· 49
7.1 ····· 49
7.2 ····· 49
8 MAC VLAN Tag ····· 50
8.1 ····· 50
8.2 ····· 50
8.2.1 -display mac-authentication connection ····· 50
9 OpenFlow ID ····· 51
9.1 ····· 51
9.2 ····· 51
9.2.1 -flow-table ····· 51
Release 1111 ····· 52
1 — MAC ARP /ND MPLS VLAN ····· 52
1.1 MAC ARP /ND MPLS VLAN ····· 52
1.2 MAC ARP /ND MPLS VLAN ····· 53
1.2.1 display switch-mode status ····· 53
1.2.2 switch-mode ····· 54
2 — ····· 54
2.1 ····· 54
2.2 ····· 55
2.2.1 speed auto downgrade ····· 55

3 — OpenFlow ····· 56
3.1 ····· 56
3.2 ····· 56
3.2.1 flow-log disable ····· 56
4 — OpenFlow MAC-IP ····· 57
4.1 OpenFlow MAC-IP ····· 57
4.2 OpenFlow MAC-IP ····· 57
4.2.1 refresh ip-flow ····· 57
5 — BFD MAD ····· 57
5.1 BFD MAD ····· 57
5.2 ····· 58
5.2.1 -mad bfd enable ····· 58
5.2.2 -mad ip address ····· 58
6 — ARP MAD ····· 59
6.1 ARP MAD ····· 59
6.2 ····· 59
6.2.1 -mad arp enable ····· 59
7 — ····· 59
7.1 ····· 59
7.2 ····· 60
7.2.1 -link-aggregation selected-port maximum ····· 60
7.2.2 -link-aggregation selected-port minimum ····· 60
8 — ····· 60
8.1 ····· 60
8.2 ····· 60
8.2.1 -bgp update-delay on-startup ····· 60
9 VSI ····· 61
9.1 ····· 61
9.2 ····· 61
9.2.1 -xconnect vsi ····· 61
10 ····· 61
10.1 ····· 61
10.2 ····· 61
10.2.1 -ac interface ····· 61

Release 1109 63
1 — NETCONF 63
1.1 NETCONF 63
1.2 NETCONF 63
1.2.1 netconf log 63
2 —<edit-config> 65
2.1 <edit-config> 65
2.2 <edit-config> 65
3 —NETCONF 65
3.1 NETCONF 65
3.2 NETCONF 66
4 NETCONF 66
4.1 NETCONF 66
4.2 NETCONF 70
5 — 70
5.1 70
5.2 71
5.2.1 -shutdown-interval 71
6 71
6.1 71
6.2 71
6.2.1 -role default-role enable 71
ESS 1107 72
1 — HASH 72
1.1 HASH 72
1.2 HASH 73
1.2.1 link-aggregation global load-sharing algorithm 73
1.2.2 link-aggregation global load-sharing seed 74
2 — install Feature 74
2.1 install Feature 74
2.2 install Feature 75
2.2.1 install activate 75
2.2.2 install deactivate 76
3 — ARP 76
3.1 ARP 76

3.2 ARP 77
3.2.1 arp multiport 77
4 — VLAN 78
4.1 VLAN 78
4.2 VLAN 78
4.2.1 packet-filter filter(vlan-interface view) 78
5 —QCN 79
5.1 QCN 79
5.1.1 QCN 79
5.1.2 QCN 80
5.1.3 QCN 81
5.1.4 QCN 82
5.1.5 83
5.1.6 84
5.2 QCN 84
5.3 QCN 84
5.3.1 84
5.3.2 QCN 84
5.4 CND 85
5.4.1 CND 85
5.4.2 CND 86
5.5 86
5.6 QCN 86
5.7 QCN 87
5.7.1 QCN 87
5.7.2 CND 90
5.8 QCN 94
5.8.1 display qcn cp interface 94
5.8.2 display qcn global 95
5.8.3 display qcn interface 96
5.8.4 display qcn profile 97
5.8.5 qcn enable 98
5.8.6 qcn port priority 99
5.8.7 qcn priority 100
5.8.8 qcn priority profile 101
5.8.9 qcn proflie 101

5.8.10 reset qcn cp interface 102
6 — SSL 3.0 102
6.1 SSL 3.0 102
6.2 SSL 3.0 103
6.2.1 ssl version ssl3.0 disable 103
7 — / Monitor Link 104
7.1 / Monitor Link 104
7.2 / Monitor Link 104
7.2.1 monitor-link disable 104
8 — 105
8.1 105
8.2 105
8.2.1 mirror-to 105
9 — 106
9.1 106
9.2 106
9.2.1 info-center syslog min-age 106
10 —Packet Capture 107
10.1 Packet Capture 107
10.2 Packet Capture 108
10.2.1 108
10.2.2 109
10.2.3 110
10.3 Packet Capture 111
10.3.1 111
10.3.2 112
10.3.3 113
10.4 Packet Capture 114
10.5 114
10.5.1 114
10.5.2 114
10.6 115
10.6.1 115
10.6.2 116
10.7 Packet Capture 117
10.7.1 packet-capture interface 117

2 — 129
2.1 129
2.2 129
2.2.1 -service-loopback group 129
3 — ARP 129
3.1 129
3.2 129
4 — BGP group-name 130
4.1 130
4.2 130
4.2.1 -display bgp peer 130
4.2.2 -display bgp group 131
5 131
5.1 131
5.2 131
5.2.1 -ip load-sharing mode per-flow 131
ESS 1105 132

(1)

(2)

(3)

1 ICMP-jitter

	system-view	-
NQA NQA	**nqa entry** *admin-name operation-tag*	NQA
ICMP-jitter	**type icmp-jitter**	-
	destination ip *ip-address*	IP
ICMP-jitter	**probe packet-number** *packet-number*	ICMP-jitter 10
ICMP-jitter	**probe packet-interval** *packet-interval*	ICMP-jitter 20
ICMP-jitter	**probe packet-timeout** *packet-timeout*	ICMP-jitter 3000
IP	**source ip** *ip-address*	IP IP IP IP up

说明

display nqa history 命令的显示信息无法反映 ICMP-jitter 测试的结果，如果想了解 ICMP-jitter 测试的结果，建议通过 **display nqa result** 命令查看最近一次 NQA 测试的当前结果，或通过 **display nqa statistics** 命令查看 NQA 测试的统计信息。

1.2 ICMP-jitter

ICMP-jitter “ ” “ NQA ”

- **destination ip**
- **probe packet-number**
- **probe packet-interval**
- **probe packet-timeout**
- **source ip**

UDP-tracert UDP-tracert 20

```
<Sysname> system-view
[Sysname] nqa entry admin test
[Sysname-nqa-admin-test] type udp-tracert
[Sysname-nqa-admin-test-udp-tracert] max-failure 20
```

2.2.5 init-ttl

init-ttl UDP-tracert

undo init-ttl

init-ttl *value*

undo init-ttl

UDP-tracert 1

UDP-tracert

network-admin

value UDP-tracert 1 255

UDP-tracert UDP-tracert 5

```
<Sysname> system-view
[Sysname] nqa entry admin test
[Sysname-nqa-admin-test] type udp-tracert
[Sysname-nqa-admin-test-udp-tracert] init-ttl 5
```

3

3.1

3

	system-view	-
NQA NQA	**nqa entry** *admin-name operation-tag*	NQA

network-admin

reaction trigger probe-fail

reaction trigger probe-pass

ICMP NQA

NQA

```
<Sysname> system-view
[Sysname] nqa template icmp icmptplt
[Sysname-nqatplt-icmp-icmptplt] reaction trigger per-probe
```

- **reaction trigger probe-fail**
- **reaction trigger probe-pass**

5 —TCP Half Open NQA

5.1 TCP Half Open NQA

TCP Half Open NQA TCP Half Open TCP
TCP Half Open TCP
TCP Half Open NQA TCP ACK
RST TCP

5 TCP Half Open NQA

		system-view	-
TCP Half Open NQA		**nqa template tcphalfopen** *name*	NQA
	IP	**destination ip** *ip-address*	
	IPv6	**destination ipv6** *ipv6-address*	
	IP	**source ip** *ip-address*	

HTTPS		**version** { **v1.0** | **v1.1** }	HTTPS v1.0
HTTPS		**operation** { **get** | **post** | **raw** }	HTTPS **get** HTTPS HTTPS **raw** **raw-request**
raw-request		**raw-request**	raw-request **operation raw**
HTTPS			HTTPS **operation raw**
		quit	raw-request
	IP	**source ip** *ip-address*	IP IP
	IPv6	**source ipv6** *ipv6-address*	up
		expect data *expression* [**offset** *number*]	
		expect status *status-list*	

7.2 HTTPS NQA

UDP NQA “ **ssl-client-policy** ”

— SSL “ ”

“ NQA ”

- **url**
- **username**
- **password**
- **ssl-client-policy**
- **version**
- **operation**

- **destination ipv6**
- **destination port**
- **source ip**
- **source ipv6**
- **ssl-client-policy**

9 — SSL

9.1 SSL

9 SSL

		system-view	-
	HTTPS NQA	**nqa template https** *name*	NQA
	SSL NQA	**nqa template ssl** *name*	
SSL		**ssl-client-policy** *policy-name*	SSL

9.2 SSL

9.2.1 ssl-client-policy

ssl-client-policy HTTPS/SSL NQA SSL
undo ssl-client-policy

ssl-client-policy *policy-name*
undo ssl-client-policy

SSL

HTTPS/SSL NQA

network-admin

policy-name SSL 1 31

SSL SSL

SSL NQA SSL policy

```
<Sysname> system-view
[Sysname] nqa template ssl ssltplt
[Sysname-nqatplt-ssl-ssltplt] ssl-client-policy policy
```

10 — 802.1X Guest VLAN

10.1 802.1X Guest VLAN

802.1X 802.1X MAC

802.1X Guest VLAN

802.1X Guest VLAN MAC MAC

EAP-Request/Identity **dot1x timer tx-period**

dot1x retry

802.1X Guest VLAN

802.1X MAC

802.1X Guest VLAN 802.1X Guest VLAN

10 802.1X Guest VLAN

	system-view	-
	interface *interface-type interface-number*	-
802.1X Guest VLAN	**dot1x guest-vlan-delay**	802.1X Guest VLAN

10.2 802.1X Guest VLAN

10.2.1 dot1x guest-vlan-delay

dot1x guest-vlan-delay 802.1X Guest VLAN

undo dot1x guest-vlan-delay

dot1x guest-vlan-delay

dot1x handshake reply enable

undo dot1x handshake reply enable

network-admin

GigabitEthernet1/0/1

```
<Sysname> system-view
[Sysname] interface gigabitethernet 1/0/1
[Sysname-GigabitEthernet1/0/1] dot1x handshake reply enable
```

12 — MAC 802.1X

12.1 MAC 802.1X

802.1X MAC EAP 802.1X
802.1X MAC
802.1X MAC
MAC 802.1X MAC
MAC EAP-Request 802.1X 802.1X
MAC
802.1X Guest VLAN MAC
MAC MAC VLAN
MAC 802.1X 802.1X Guest VLAN
802.1X Guest VLAN “ ”
“ 802.1X ”
802.1X MAC

- 802.1X MAC 802.1X
  macbased
- **userlogin-secure-or-mac**
  userlogin-secure-or-mac-ext “ ”
  “ ”

MAC 802.1X MAC
802.1X MAC

12 MAC 802.1X

	system-view	-
	interface *interface-type interface-number*	-
MAC 802.1X	**mac-authentication parallel-with-dot1x**	MAC 802.1X MAC

12.2 MAC 802.1X

12.2.1 mac-authentication parallel-with-dot1x

mac-authentication parallel-with-dot1x MAC 802.1X

undo mac-authentication parallel-with-dot1x

mac-authentication parallel-with-dot1x
undo mac-authentication parallel-with-dot1x

MAC 802.1X MAC

network-admin

802.1X MAC 802.1X
MAC MAC EAP-Request/Identity
802.1X MAC
802.1X MAC

- 802.1X MAC 802.1X
  macbased
- **userlogin-secure-or-mac**
  userlogin-secure-or-mac-ext
  802.1X MAC 802.1X Guest VLAN MAC VLAN MAC 802.1X
  802.1X Guest VLAN

MAC 802.1X MAC

GigabitEthernet1/0/1 MAC 802.1X

```
<Sysname> system-view
[Sysname] interface gabitethernet 1/0/1
[Sysname-GigabitEthernet1/0/1] mac-authentication parallel-with-dot1x
```

13 — MAC 802.1X

13.1 MAC 802.1X

MAC 802.1X MAC
EAP 802.1X 802.1X
802.1X 802.1X 802.1X
802.1X
802.1X

13 MAC 802.1X

	system-view	-
	interface *interface-type interface-number*	-
MAC 802.1X	**dot1x after-mac-auth max-attemp** *unsuccessful-attempts*	

13.2 MAC 802.1X

13.2.1 dot1x after-mac-auth max-attempt

dot1x after-mac-auth max-attempt MAC 802.1X

undo dot1x after-mac-auth max-attempt

dot1x after-mac-auth max-attempt *max-attemps*
undo dot1x after-mac-auth max-attempt

MAC 802.1X

network-admin

max-attemps MAC 802.1X
1 50

MAC 802.1X 802.1X
802.1X
MAC 802.1X
802.1X
MAC 802.1X MAC
MAC 802.1X

GigabitEthernet1/0/1 MAC 802.1X 10

```
<Sysname> system-view
[Sysname] interface gigabitethernet 1/0/1
[Sysname-GigabitEthernet1/0/1] dot1x after-mac-auth max-attempt 10
```

14 — Portal Web

14.1 Portal Web

Portal Web Portal Portal Web Portal
Portal Web Portal Portal
AAA Web
Portal Web Portal Portal

1.

Portal Web HTTPS
PKI CA “ ” “ PKI ”
SSL PKI “ ” “ SSL ”

2. Portal Web

14 Portal Web

	system-view	-

Portal Web	**portal local-web-server** { **http** | **https ssl-server-policy** *policy-name* [**tcp-port** *port-number*] }	Protal Web
Portal Web	**default-logon-page** *filename*	Portal Web
Portal Web HTTP/HTTPS TCP	**tcp-port** *port-number*	HTTP TCP 80 HTTPS TCP 443

14.2 Portal Web

14.2.1 portal local-web-server

portal local-web-server Portal Web Portal Web

undo portal local-web-server Portal Web

portal local-web-server { **http** | **https ssl-server-policy** *policy-name* [**tcp-port** *port-number*] }
undo portal local-web-server { **http** | **https** }

Protal Web

network-admin

http Portal Web HTTP
https Portal Web HTTPS
ssl-server-policy *policy-name* HTTPS SSL *policy-name* SSL 1 31
tcp-port *port-number* Portal Web HTTPS TCP 1 65535 443

Portal Web Portal Portal Web Portal Portal Web Portal Portal Web URL Portal Web

- URL IP IP

- URL /portal/ http://1.1.1.1/portal/
  Portal Web
- HTTPS SSL **undo ssl server-policy**
- HTTPS SSL **undo portal local-web-server https** Portal Web Portal Web
  SSL
  Portal Web HTTPS
- Portal Web SSL HTTPS SSL
  Portal Web TCP HTTPS TCP
  TCP
- HTTPS Portal Web TCP
  HTTP 80 Telnet 23 Portal Web
  Portal
- HTTP HTTPS Portal Web TCP
  8080 Web

Portal Web Portal Web HTTP

```
<Sysname> system-view
[Sysname] portal local-web-server http
[Sysname-portal-local-websvr-http] quit
```

Portal Web Portal Web HTTPS
SSL policy1

```
<Sysname> system-view
[Sysname] portal local-web-server https ssl-server-policy policy1
[Sysname-portal-local-websvr-https] quit
```

SSL policy2

```
[Sysname] undo portal local-web-server https
[Sysname] portal local-web-server https ssl-server-policy policy2
[Sysname-portal-local-websvr-https] quit
```

HTTPS Portal Web SSL
policy1 442

```
<Sysname> system-view
[Sysname] portal local-web-server https ssl-server-policy policy1 tcp-port 442
[Sysname-portal-local-websvr-https] quit
```

14.2.2 default-logon-page

default-logon-page Portal Web

undo default-logon-page

default-logon-page *filename*

undo default-logon-page

Portal Web

Portal Web

network-admin

filename 1 91

zip

default-logon-page Portal Web Portal **default-logon-page** Portal

Portal

Portal Web pagefile1.zip

```
<Sysname> system-view
[Sysname] portal local-web-server http
[Sysname-portal-local-websvr-http] default-logon-page pagefile1.zip
```

14.2.3 tcp-port

tcp-port Portal Web HTTP/HTTPS TCP

undo tcp-port

tcp-port *port-number*

undo tcp-port

HTTP TCP 80 HTTPS TCP 443

Portal Web

network-admin

port-number TCP 1 65535

Portal Web URL Portal Web

- HTTP HTTPS Portal Web TCP FTP 21 Telnet 23 Web Server
- HTTP Portal Web TCP HTTPS 443
- HTTP HTTPS Portal Web TCP 8080 Web

Portal Web HTTP TCP 2331

```
<Sysname> system-view
[Sysname] portal local-web-server http
[Sysname-portal-local-websvr-http] tcp-port 2331
```

15 IPv4 MTU

15.1

IPv4 MTU

15.2

15.2.1 -ip mtu

ip mtu *mtu-size*
undo ip mtu

mtu-size IPv4 MTU 128 2000
mtu-size IPv4 MTU 128 1500

16 IPv6 MTU

16.1

IPv6 MTU

MFF VLAN 40

18.2

19 —ICMP-echo

19.1

ICMP-echo

IPv6

19.2

ICMP-echo “ **next-hop ipv6** ”

“ ”

“ NQA ”

- **destination ipv6**
- **source ipv6**
- **next-hop ipv6**

ICMP-echo IPv4

ICMP-echo IPv4 IPv6

20 —SNMP

20.1

SNMP SNMP Agent SNMPv1 SNMPv2c

20.2

20.3 - community read

community read SNMP

undo community read

community read { cipher | simple } *community-name*

undo community read

22.2

23 —NQA

23.1

NQA UDP-tracert

23.2

24 —ICMP NQA

24.1

ICMP NQA IPv6

24.2

ICMP NQA “ **next-hop ipv6** ”
“ **reaction trigger per-probe** ”

- **next-hop ipv6**
- **reaction trigger per-probe**

ICMP NQA IPv4 ICMP NQA

ICMP NQA IPv4 IPv6 ICMP NQA

25 —HTTP NQA

25.1

HTTP NQA HTTP

25.2

HTTP NQA **version** **version** “ ” “ NQA ”

26 —

26.1

IPv6

26.2

26.2.1 -next-hop

next-hop

next-hop { **ip** | **ipv6** }

ICMP-echo
ICMP/TCP Half Open NQA

IPv4
IPv4 IPv6

Release 1115

Release 1114

- — TCP
- — MAC Guest VLAN
- — MAC
- —
- — ARP Detection
- —

1 — TCP

1.1 TCP

BGP TCP BGP BGP
IP IPv6 / TCP TCP
IP /IPv6 / TCP

- IP /IPv6 IP /IPv6
TCP IP /IPv6
A B **peer**
x.x.x.x **as-number** as-number x.x.x.x B IP
peer connect-interface IP
x.x.x.x
- BGP
down TCP BGP TCP
TCP
Loopback Loopback TCP

- BGP BGP TCP
TCP BGP BGP
IP BGP
BGP TCP BGP IP
BGP TCP

1 TCP IPv4

		system-view	-
BGP	BGP	**bgp** *as-number*	-
BGP-VPN	BGP-VPN	**bgp** *as-number*	

		ip vpn-instance *vpn-instance-name*	
BGP IP	/ TCP	**peer** *ipv4-address* [*mask-length*] **source-address** *source-ipv4-address* **peer** *group-name* **source-address** *source-ipv4-address*	BGP BGP IP / TCP

2 TCP IPv6

		system-view	-
BGP	BGP	**bgp** *as-number*	-
BGP-VPN	BGP-VPN	**bgp** *as-number*	
		ip vpn-instance *vpn-instance-name*	
BGP IPv6	/ TCP	**peer** *ipv6-address* [*prefix-length*] **source-address** *source-ipv6-address* **peer** *group-name* **source-address** *source-ipv6-address*	BGP BGP IPv6 / TCP

1.2 TCP

1.2.1 peer source-address

peer source-address / BGP TCP IPv4 /IPv6

undo peer source-address

peer *ipv4-address* [*mask-length*] **source-address** *source-ipv4-address*

peer *ipv6-address* [*prefix-length*] **source-address** *source-ipv6-address*

undo peer { *ipv4-address* [*mask-length*] | *ipv6-address* [*prefix-length*] } **source-address**

peer *group-name* **source-address** { *source-ipv4-address* | *source-ipv6-address* } *

undo peer *group-name* **source-address** [*source-ipv4-address* | *source-ipv6-address*]

BGP BGP IPv4 IPv6 / TCP

BGP /BGP-VPN

network-admin

ipv4-address IPv4

mask-length 0 32

source-ipv4-address IPv4

ipv6-address IPv6

prefix-length 0 128

source-ipv6-address IPv6

group-name 1 47

peer connect-interface TCP

peer connect-interface TCP BGP

peer connect-interface

peer connect-interface TCP

- BGP
  down TCP BGP TCP
  TCP
  Loopback Loopback TCP

- BGP BGP TCP
  TCP BGP BGP
  IP BGP
  BGP TCP BGP IP
  BGP TCP

EBGP **peer ebgp-max-hop**
EBGP
BGP source-ipv4-address source-ipv6-address
IPv4 BGP *source-ipv4-address* TCP IPv4
IPv6 BGP *source-ipv6-address*
TCP IPv6

BGP default BGP test BGP TCP
1.1.1.1 1::1

```
<Sysname> system-view
[Sysname] bgp 100
[Sysname-bgp] peer test source-address 1.1.1.1 1::1
```

2 — MAC Guest VLAN

2.1 MAC Guest VLAN

MAC Guest VLAN

Guest VLAN Guest VLAN

3 MAC Guest VLAN

	system-view	-
	interface *interface-type interface-number*	-
MAC Guest VLAN	**mac-authentication guest-vlan auth-period** *period-value*	Guest VLAN 30

2.2 MAC Guest VLAN

2.2.1 mac-authentication guest-vlan auth-period

mac-authentication guest-vlan auth-period Guest VLAN

undo mac-authentication guest-vlan auth-period

mac-authentication guest-vlan auth-period *period-value*

undo mac-authentication guest-vlan auth-period

Guest VLAN 30

network-admin

period-value 1 3600

GigabitEthernet1/0/1 Guest VLAN 150

```
<Sysname> system-view
[Sysname] interface gigabitethernet1/0/1
[Sysname-GigabitEthernet1/0/1] mac-authentication guest-vlan auth-period 150
```

3 — MAC

3.1 MAC

MAC

RADIUS

MAC

4 MAC

	system-view	-
	interface *interface-type interface-number*	-
MAC	**mac-authentication offline-detect enable**	MAC

3.2 MAC

3.2.1 mac-authentication offline-detect enable

mac-authentication offline-detect enable MAC
undo mac-authentication offline-detect enable MAC

mac-authentication offline-detect enable
undo mac-authentication offline-detect enable

MAC

network-admin

GigabitEthernet1/0/1 MAC

```
<Sysname> system-view
[Sysname] interface GigabitEthernet1/0/1
[Sysname-GigabitEthernet1/0/1] undo mac-authentication offline-detect enable
```

4 —

4.1

configuration commit

5

	system-view	-
	configuration commit delay *delay-time*	*delay-time* 1 65535
	configuration commit	**configuration commit delay**

4.2

4.2.1 configuration commit

configuration commit

configuration commit

network-admin

configuration commit **configuration commit delay**

“ ” “ ”

10

```
<Sysname> system-view
[Sysname] configuration commit delay 10
#
[Sysname] configuration commit
```

configuration commit

```
[Sysname] configuration commit
The system is rolling back configuration. Please wait…
```

4.2.2 configuration commit delay

configuration commit delay

configuration commit delay *delay-time*

network-admin

delay-time 1 65535

configuration commit

-
- **configuration commit delay** **configuration commit**

-
-
- **configuration commit delay** “ Y ” **configuration commit delay**

10

```
<Sysname> system-view
[Sysname] configuration commit delay 10
#
[Sysname] configuration commit delay 60
The commit delay already set 10 minutes, overwrite it? [Y/N]:y
```

configuration commit delay

```
[Sysname] configuration commit delay 20
The system is rolling back configuration. Please wait…
```

5 — ARP Detection

5.1 ARP Detection

ARP Detection ARP

-
- ARP IP
- ARP

“ Detected an inspection occurred on interface GigabitEthernet1/0/1 with IP address 172.18.48.55 (Total 10 packets dropped). ”

5.2 ARP Detection

6 ARP Detection

	system-view	-
ARP Detection	**arp detection log enable**	ARP Detection

5.3 ARP Detection

5.3.1 arp detection log enable

arp detection log enable ARP Detection

undo arp detection log enable ARP Detection

arp detection log enable

undo arp detection log enable

ARP Detection

network-admin

arp detection log enable ARP Detection **undo arp detection log enable** ARP Detection

ARP Detection

```
<Sysname> system-view
[Sysname] arp detection log enable
```

ARP Detection

```
<Sysname> system-view
[Sysname] undo arp detection log enable
```

6 —

6.1

6.2

6.2.1 -duplex

duplex { **auto** | **full** | **half** }

Release 1113

- —
- — BGP
- NETCONF
- OpenFlow QINQ
- —
- 802.1X
- 802.1X VLAN Tag
- MAC VLAN Tag
- OpenFlow ID

1 —

1.1

ARP

ARP

1

	system-view	-
VLAN VLAN	**interface** *vlan-interface-id* **vlan-interface**	VLAN VLAN
	arp mode uni	

1.2

1.3 arp mode uni

arp mode uni

undo arp mode

arp mode uni

undo arp mode

VLAN

network-admin

ARP

ARP

VLAN 2

```
<Sysname> system-view
[Sysname] interface vlan-interface 2
[Sysname-Vlan-interface2] arp mode uni
```

2 — BGP

2.1 BGP

BGP

“ ” “ ”

2 BGP IPv4 /VPNv4

		system-view	-
BGP IPv4 BGP-VPN IPv4 BGP VPNv4 BGP-VPN VPNv4	BGP IPv4	**bgp** *as-number*	-
		address-family ipv4 [**unicast**]	
	BGP-VPN IPv4	**bgp** *as-number*	
		ip vpn-instance *vpn-instance-name*	
		address-family ipv4 [**unicast**]	
	BGP VPNv4	**bgp** *as-number*	
		address-family vpnv4	
	BGP-VPN	**bgp** *as-number*	

	VPNv4	**ip vpn-instance** *vpn-instance-name*	
		address-family vpnv4	
BGP		**log-route-flap** *monitor-time monitor-count* [*log-count-limit* | **route-policy** *route-policy-name*] *	BGP

3 BGP IPv6 /VPNv6

		system-view	-
BGP IPv6 BGP-VPN IPv6 BGP VPNv6	BGP IPv6	**bgp** *as-number*	-
		address-family ipv6 [**unicast**]	
	BGP-VPN IPv6	**bgp** *as-number*	
		ip vpn-instance *vpn-instance-name*	
		address-family ipv6 [**unicast**]	
	BGP VPNv6	**bgp** *as-number*	
		address-family vpnv6	
BGP		**log-route-flap** *monitor-time monitor-count* [*log-count-limit* | **route-policy** *route-policy-name*] *	BGP

2.2 BGP

2.2.1 log-route-flap

log-route-flap BGP

undo log-route-flap

log-route-flap *monitor-time monitor-count* [*log-count-limit* | **route-policy** *route-policy-name*] *

undo log-route-flap

BGP

BGP IPv4 /BGP-VPN IPv4 /BGP-VPN IPv6 /BGP VPNv4 /BGP-VPN VPNv4 /BGP VPNv6 /BGP IPv6

network-admin

monitor-time 1 600

monitor-count 2 8

log-count-limit 1 600 200

route-policy *route-policy-name*

route-policy-name 1 63

BGP

“

” “ ”

BGP

BGP default BGP IPv4 10
5 100

```
<Sysname> system-view
[Sysname] bgp 100
[Sysname-bgp-default] address-family ipv4 unicast
[Sysname-bgp-default-ipv4] log-route-flap 10 5 100
```

3 NETCONF

3.1 NETCONF

NETCONF Telnet SSH Console
NETCONF

4 NETCONF

	system-view	-
NETCONF	**netconf** { **soap** | **agent** } **idle-timeout** *minute*	• HTTP/HTTPS NETCONF over SOAP 10 • SSH/Telent/NETCONF over SSH 0

3.2 NETCONF

3.2.1 netconf idle-timeout

netconf idle-timeout NETCONF

undo netconf idle-timeout

netconf { **soap** | **agent** } **idle-timeout** *minute*

undo netconf { **soap** | **agent** } **idle-timeout**

HTTP/HTTPS NETCONF over SOAP 10

SSH/Telent/NETCONF over SSH 0

network-admin

soap HTTP/HTTPS NETCONF over SOAP

agent SSH/Telent/NETCONF over SSH

minute

- HTTP/HTTPS NETCONF over SOAP 1 999
- SSH/Telent/NETCONF over SSH 0 999 0

HTTP/HTTPS NETCONF over SOAP 20

```
<Sysname> system-view
[Sysname] netconf soap idle-timeout 20
```

4 OpenFlow QINQ

4.1 QINQ

VLAN Tag Extensibility VLAN Tag

5 QINQ

	system-view	-
OpenFlow OpenFlow	**openflow instance** *instance-id*	OpenFlow

QINQ	**qinq-network enable**	QINQ VLAN Tag Extensibility VLAN Tag

4.2 QINQ

4.2.1 qinq-network enable

qinq-network enable QINQ

undo qinq-network enable

qinq-network enable

undo qinq-network enable

QINQ VLAN Tag Extensibility VLAN Tag

OpenFlow

network-admin

VLAN Tag Extensibility VLAN Tag

QINQ

```
<Sysname> system-view
[Sysname] openflow instance 1
[Sysname-of-inst-1] qinq-network enable
```

5 —

5.1

5.2

5.2.1 -link-aggregation lacp traffic-redirect-notification enable

link-aggregation lacp traffic-redirect-notification enable

/ /

/

/

-
-

6 802.1X

6.1

802.1X

6.2

6.2.1 -dot1x timer

dot1x timer { **ead-timeout** *ead-timeout-value* | **handshake-period** *handshake-period-value* | **quiet-period** *quiet-period-value* | **reauth-period** *reauth-period-value* | **server-timeout** *server-timeout-value* | **supp-timeout** *supp-timeout-value* | **tx-period** *tx-period-value* }

undo dot1x timer { **ead-timeout** | **handshake-period** | **quiet-period** | **reauth-period** | **server-timeout** | **supp-timeout** | **tx-period** }

tx-period-value	10 120
tx-period-value	1 120

7 802.1X VLAN Tag

7.1

802.1X VLAN Tag AAA AAA
“ VLAN ID+ ”
6 VLAN

6 VLAN

	Access	Trunk	Hybrid
Port-based	• Tag VLAN • VLAN • VLAN VLAN	• VLAN • VLAN Tag VLAN VLAN VLAN Tag VLAN	• VLAN Tag VLAN Tag VLAN Tag VLAN Tag • VLAN Tag VLAN VLAN VLAN Tag VLAN
MAC-based	• Tag VLAN • VLAN • VLAN VLAN	• VLAN • VLAN Tag VLAN VLAN VLAN Tag VLAN	• VLAN Tag VLAN Tag VLAN Tag • VLAN Tag MAC VLAN VLAN MAC VLAN VLAN • VLAN Tag MAC VLAN VLAN VLAN
	VLAN Tag MAC VLAN MAC VLAN VLAN MAC VLAN VLAN Tag MAC VLAN VLAN VLAN		

7.2

8 MAC VLAN Tag

8.1

MAC VLAN Tag
VLAN Tag VLAN
VLAN Tag

- Access VLAN VLAN
- Trunk VLAN
  VLAN VLAN
- Hybrid VLAN Tag
  VLAN VLAN
  MAC VLAN VLAN MAC
  VLAN VLAN
  VLAN Tag

- Access Tag VLAN
- Trunk VLAN Tag
  VLAN
- Hybrid VLAN Tag
  VLAN


说明

在授权 VLAN 未携带 Tag 的情况下，只有开启了 MAC VLAN 功能的端口上才允许给不同的用户 MAC 授权不同的 VLAN。如果没有开启 MAC VLAN 功能，授权给所有用户的 VLAN 必须相同，否则仅第一个通过认证的用户可以成功上线。

在授权 VLAN 携带 Tag 的情况下，无论是否开启了 MAC VLAN 功能，设备都会给不同的用户授权不同的 VLAN，一个 VLAN 只能授权给一个用户。

8.2

8.2.1 -display mac-authentication connection

display mac-authentication connection [**interface** *interface-type interface-number* | **slot** *slot-number* | **user-mac** *mac-addr* | **user-name** *user-name*]

Authorization tagged VLAN

Authorization tagged VLAN

9 OpenFlow ID

9.1

OpenFlow VLAN Tag VLAN Tag

9.2

9.2.1 -flow-table

flow-table { **extensibility** *extensibility-table-id* | **mac-ip** *mac-ip-table-id* }*

flow-table { [**ingress-vlan** *ingress-table-id*] [**extensibility** *extensibility-table-id* | **mac-ip** *mac-ip-table-id*] * [**egress-vlan** *egress-table-id*] }

OpenFlow

ingress-vlan *ingress-table-id* VLAN Tag *ingress-table-id* 0 254

egress-vlan *egress-table-id* VLAN Tag *egress-table-id* 0 254

Release 1111

- — MAC ARP /ND MPLS VLAN
- —
- — OpenFlow
- — OpenFlow MAC-IP
- — BFD MAD
- — ARP MAD
- —
- —
- VSI
-

1 — MAC ARP /ND MPLS VLAN

1.1 MAC ARP /ND MPLS VLAN

MAC ARP /ND MPLS VLAN

1 MAC ARP /ND MPLS VLAN

	MAC	ARP /ND	MPLS	VLAN	VLAN
0	32K	16K ARP 8K ND	8K	16K	8K
1	64K	16K ARP 8K ND	4K	8K	4K
2	32K	32K ARP 16K ND	8K	8K	4K

2 MAC ARP /ND MPLS VLAN

	system-view	-
MAC ARP /ND MPLS VLAN	**switch-mode** { **0** | **1** | **2** }	0

提示

该配置在设备重启后才能生效，进行设备重启前请评估重启对网络造成的影响，做好相关准备工作。

1.2 MAC ARP /ND MPLS VLAN

1.2.1 display switch-mode status

display switch-mode status

display switch-mode status

network-admin

network-operator

#

```
<Sysname> display switch-mode status
Switch-mode in use: 0--Table Size: MAC(32K), L3(32K), MPLS(8K), VLAN_XLATE(16K),
EGR_VLAN_XLATE(8K).
Switch-mode for next reboot: 0--Table Size: MAC(32K), L3(32K), MPLS(8K), VLAN_XLATE(16K),
EGR_VLAN_XLATE(8K).
```

3 display switch-mode status

Switch-mode in use	
Switch-mode for next reboot	
Table Size	
MAC(32K)	MAC
L3(32K)	ARP ND
MPLS(8K)	MPLS
VLAN_XLATE(16K)	VLAN
EGR_VLAN_XLATE(8K)	VLAN

1.2.2

tch-mode MAC ARP /ND MPLS VLAN

0

100Mbit/s

5

	system-view	-
	interface *interface-type interface-number*	-
	speed auto downgrade	

2.2

2.2.1 speed auto downgrade

speed auto downgrade

undo speed auto downgrade

speed auto downgrade

undo speed auto downgrade

network-admin

GigabitEthernet1/0/1

```
<Sysname> system-view
[Sysname] interface gigabitethernet 1/0/1
[Sysname-GigabitEthernet1/0/1] speed auto downgrade
```

3 — OpenFlow

3.1

6

	system-view	-
OpenFlow	**openflow instance** *instance-id*	-
	flow-log disable	

3.2

3.2.1 flow-log disable

flow-log disable

undo flow-log disable

flow-log disable

undo flow-log disable

OpenFlow

network-admin

OpenFlow 1

```
<Sysname> system-view
[Sysname] openflow instance 1
[Sysname-of-inst-1] flow-log disable
```

4 — OpenFlow MAC-IP

4.1 OpenFlow MAC-IP

MAC-IP MAC-IP

7 OpenFlow MAC-IP

	system-view	-
OpenFlow	**openflow instance** *instance-id*	-
OpenFlow MAC-IP	**refresh ip-flow**	-

4.2 OpenFlow MAC-IP

4.2.1 refresh ip-flow

refresh ip-flow OpenFlow MAC-IP

refresh ip-flow

OpenFlow

network-admin

OpenFlow 1 MAC-IP

```
<Sysname> system-view
[Sysname] openflow instance 1
[Sysname-of-inst-1] refresh ip-flow
```

5 — BFD MAD

5.1 BFD MAD

BFD MAD

(1) IRF

(2) IRF VLAN

(3) BFD MAD MAD IP

8 BFD MAD

	system-view	-
	interface M-GigabitEthernet *interface-number*	-
BFD MAD	**mad bfd enable**	BFD MAD
MAD IP	**mad ip address** *ip-address* { *mask* | *mask-length* } **member** *member-id*	MAD IP

5.2

5.2.1 -mad bfd enable

mad bfd enable

undo mad bfd enable

VLAN /

VLAN

VLAN

5.2.2 -mad ip address

mad ip address *ip-address* { *mask* | *mask-length* } **member** *member-id*

undo mad ip address *ip-address* { *mask* | *mask-length* } **member** *member-id*

VLAN /

VLAN

VLAN

6 — ARP MAD

6.1 ARP MAD

ARP MAD

(1) IRF

(2) IRF VLAN

(3) IRF IP ARP MAD

9 ARP MAD

	system-view	-
IRF	**irf domain** *domain-id*	IRF 0
IRF MAC	**undo irf mac-address persistent**	IRF MAC 6
	interface m-gigabitethernet *interface-number*	-
IP	**ip address** *ip-address* { *mask* | *mask-length* }	IP
ARP MAD	**mad arp enable**	ARP MAD

6.2

6.2.1 -mad arp enable

mad arp enable

undo mad arp enable

VLAN /

VLAN

VLAN

7 —

7.1

number

7.2

7.2.1 -link-aggregation selected-port maximum

link-aggregation selected-port maximum *number*

/

number	1	8
number	1	32

7.2.2 -link-aggregation selected-port minimum

link-aggregation selected-port minimum *number*

/

number	1	8
number	1	32

8 —

8.1

BGP

8.2

8.2.1 -bgp update-delay on-startup

bgp update-delay on-startup *seconds*

BGP

seconds	1	3600	
seconds	0	3600	0

9 VSI

9.1

xconnect vsi VSI

9.2

9.2.1 -xconnect vsi

xconnect vsi *vsi-name* [**access-mode** { **ethernet** | **vlan** }]

xconnect vsi *vsi-name*

access-mode { **ethernet** | **vlan** } Ethernet VLAN

access-mode { **ethernet** | **vlan** } VLAN

10

10.1

ac interface

10.2

10.2.1 -ac interface

ac interface *interface-type interface-number* **service-instance** *instance-id* [**access-mode** { **ethernet** | **vlan** }]

ac interface *interface-type interface-number* **service-instance** *instance-id*

/

access-mode { **ethernet** | **vlan** } Ethernet VLAN

access-mode { **ethernet** | **vlan** } VLAN

Release 1109

- — NETCONF
- —<edit-config>
- —NETCONF
- NETCONF
- —

1 — NETCONF

1.1 NETCONF

NETCONF NETCONF **source** NETCONF **protocol-operation** NETCONF

1 NETCONF

	system-view	-
NETCONF	**netconf log source** { **all** | { **agent** | **soap** | **web** } * } { { **protocol-operation** { **all** | { **action** | **config** | **get** | **set** | **session** | **syntax** | **others** } * } } | **verbose** }	NETCONF

1.2 NETCONF

1.2.1 netconf log

netconf log NETCONF

undo netconf log NETCONF

netconf log source { **all** | { **agent** | **soap** | **web** } * } { { **protocol-operation** { **all** | { **action** | **config** | **get** | **set** | **session** | **syntax** | **others** } * } } | **verbose** }

undo netconf log source { **all** | { **agent** | **soap** | **web** } * } { { **protocol-operation** { **all** | { **action** | **config** | **get** | **set** | **session** | **syntax** | **others** } * } } | **verbose** }

NETCONF

network-admin

source NETCONF

- **agent** Telnet/SSH/NETCONF over SSH/Console NETCONF
- **all** NETCONF
- **soap** SOAP over HTTP SOAP over HTTPS NETCONF
- **web** Web NETCONF

protocol-operation NETCONF

- **action** action
- **all** NETCONF
- **config** NETCONF CLI save load rollback save-point lock unlock
- **get** NETCONF get get-bulk get-config get-bulk-config get-sessions
- **others** action config get set session set syntax NETCONF
- **session** NETCONF kill-session close-session hello
- **set** edit-config
- **syntax** xml schema

verbose NETCONF

NETCONF NETCONF **source** NETCONF **protocol-operation** NETCONF **undo netconf log** **verbose**

verbose NETCONF

-
- **set** edit-config

agent edit-config

```
<Sysname> system-view
[sysname] netconf log source agent protocol-operation set
```

2 —<edit-config>

2.1 <edit-config>

incremental vlan permitlist
XML
edit-config edit-config replace
NETCONF XML API
VLAN 262 untagvlanlist 12 15 1 10,12 15
XML

```
<rpc message-id ="101" xmlns="urn:ietf:params:xml:ns:netconf:base:1.0"
h3c:xmlns=" http://www.h3c.com/netconf/base:1.0">
  <edit-config>
    <target>
      <running/>
    </target>
    <config xmlns:xc="urn:ietf:params:xml:ns:netconf:base:1.0">
      <top xmlns="http://www.h3c.com/netconf/config:1.0"
xmlns:h3c="http://www.h3c.com/netconf/base:1.0">
        <VLAN xc:operation="merge">
          <HybridInterfaces>
            <Interface>
              <IfIndex>262</IfIndex>
              <UntaggedVlanList  h3c:incremental="true">1-10</UntaggedVlanList>
               </Interface>
          </HybridInterfaces>
        </VLAN>
      </top>
    </config>
  </edit-config>
</rpc>
```

2.2 <edit-config>

3 —NETCONF

3.1 NETCONF

Comware NETCONF
IP

http://www.h3c.com/netconf/base:1.0 filter IPv4 VRF vpn1 1.1.1.0 24

```
<rpc message-id="100" xmlns="urn:ietf:params:xml:ns:netconf:base:1.0"
xmlns:h3c="http://www.h3c.com/netconf/base:1.0">
  <get>
    <filter type="subtree">
      <top xmlns="http://www.h3c.com/netconf/data:1.0">
        <Route>
         <Ipv4Routes>
           <RouteEntry h3c:filter=” vrf vpn1 IP 1.1.1.0 MaskLen 24 longer”/>
         </Ipv4Routes>
        </Route>
      </top>
    </filter>
  </get>
</rpc>
```

XML API

3.2 NETCONF

4 NETCONF

4.1 NETCONF

- NETCONF
- NETCONF NETCONF

- NETCONF



说明

如果存在多个 NETCONF 会话同时配置设备，建议配置回滚前先用<lock>锁定系统，否则可能导致设备运行配置与回滚前配置不一致。

---

(4)

(5) <save-point>/<begin>

(6) <edit-config>

(7) <save-point>/<commit>

(8) <save-point>/<rollback> commit
NETCONF
commit

(9) <save-point>/<end>

(10)

1.

(11)

```
<rpc message-id="101" xmlns="urn:ietf:params:xml:ns:netconf:base:1.0">
      <save-point>
        <begin>
          <confirm-timeout>100</confirm-timeout>
       </begin>
      </save-point>
</rpc>
```

<confirm-timeout> 1 65535 600

(12)

```
<rpc-reply message-id="101" xmlns="urn:ietf:params:xml:ns:netconf:base:1.0">
  <data>
    <save-point>
       <commit>
          <commit-id>1</commit-id>
       </commit>
    </save-point>
  </data>
</rpc-reply>
```

2.

(13)

```
<rpc message-id="101" xmlns="urn:ietf:params:xml:ns:netconf:base:1.0">
  <save-point>
    <rollback>
      <commit-id/>
      <commit-index/>
      <commit-label/>
    </rollback>
  </save-point>
</rpc>
```

<commit-id/> <commit-index/> <commit-label/>
commit commit-id commit commit-index 50
commit 0 commit 49 commit commit-label
commit

(14)

```
<rpc-reply message-id="101" xmlns="urn:ietf:params:xml:ns:netconf:base:1.0">
  <ok></ok>
</rpc-reply>
```

3.

<save-point>/<commit> save-point 50 commit 50 commit force

(15)

```
<rpc message-id="101" xmlns="urn:ietf:params:xml:ns:netconf:base:1.0">
  <save-point>
    <commit>
      <label>SUPPORT VLAN<label>
      <comment>vlan 1 to 100 and interfaces. Each vlan used for different custom as
fllows: ……</comment>
    </commit>
  </save-point>
</rpc>
<label/>  <comment/>
```

(16)

```
<rpc-reply message-id="101" xmlns="urn:ietf:params:xml:ns:netconf:base:1.0">
  <data>
    <save-point>
       <commit>
          <commit-id>2</commit-id>
       </commit>
    </save-point>
  </data>
</rpc-reply>
```

4.

<save-point>/<end>

```
<rpc message-id="101" xmlns="urn:ietf:params:xml:ns:netconf:base:1.0">
  <save-point>
    <end/>
  </save-point>
</rpc>
```

(17)

```
<rpc message-id="101" xmlns="urn:ietf:params:xml:ns:netconf:base:1.0">
  <save-point>
    <end/>
   </save-point>
</rpc>
```

(18)

end

```
<rpc-reply message-id="100" xmlns="urn:ietf:params:xml:ns:netconf:base:1.0">
   <ok/>
```

```
</rpc-reply>
```

5. commit

<save-point>/<get-commits> commit

```
<rpc message-id="101" xmlns="urn:ietf:params:xml:ns:netconf:base:1.0">
  <save-point>
    <get-commits>
      <commit-id/>
      <commit-index/>
      <commit-label/>
    </get-commits>
  </save-point>
</rpc>
```

<commit-id> <commit-index> <commit-label> commit

(19)

```
<rpc message-id="101" xmlns="urn:ietf:params:xml:ns:netconf:base:1.0">
  <save-point>
    <get-commits>
      <commit-label>SUPPORT VLAN</commit-label>
    </get-commits>
  </save-point>
</rpc>
```

(20)

commit

```
<rpc-reply message-id="101" xmlns="urn:ietf:params:xml:ns:netconf:base:1.0">
   <data>
      <save-point>
         <commit-information>
           <CommitID>2</CommitID>
           <TimeStamp>Thu Oct 30 11:30:28 1980</TimeStamp>
           <UserName>test</UserName>
           <Label>SUPPORT VLAN</Label>
         </commit-information>
    </save-point>
  </data>
</rpc-reply>
```

6. commit

<save-point>/<get-commit-information> commit

```
<rpc message-id="101" xmlns="urn:ietf:params:xml:ns:netconf:base:1.0">
  <save-point>
    <get-commit-information>
       <commit-information>
         <commit-id/>
         <commit-index/>
         <commit-label/>
       </commit-information>
```

```
      <compare-information>
         <commit-id/>
         <commit-index/>
         <commit-label/>
      </compare-information
    </get-commit-information>
  </save-point>
</rpc>
```

<commit-id/> <commit-index/> <commit-label/> <compare-information/> <get-commit-information> commit

(21)

```
<rpc message-id="101" xmlns="urn:ietf:params:xml:ns:netconf:base:1.0">
  <save-point>
    <get-commit-information>
              <commit-information>
                 <commit-label>SUPPORT VLAN</commit-label>
              </commit-information>
    </get-commit-information>
  </save-point>
</rpc>
```

(22)

```
<rpc-reply message-id="101" xmlns="urn:ietf:params:xml:ns:netconf:base:1.0">
   <data>
     <save-point>
        <commit-information>
           <content>
              …
              interface vlan 1
              …
           </content>
       </commit-information>
     </save-point>
   </data>
</rpc-reply>
```

4.2 NETCONF

5 —

5.1

1 300 0 300

5.2

5.2.1 -shutdown-interval

shutdown-interval *time*

undo shutdown-interval

time	1	300
time	0	300

6

6.1

role default-role enable [*role-name*]

6.2

6.2.1 -role default-role enable

role default-role enable

role default-role enable [*role-name*]

role-name

network-operator

role-name 1 63

network-operator

ESS 1107

- — HASH
- — install Feature
- — ARP
- — VLAN
- —QCN
- — SSL 3.0
- — / Monitor Link
- —
- —
- —Packet Capture
- — OpenFlow
- — Tcl Comware
- —
- — BGP
- — BGP
- — SCP
- —Monitor Link

1 — HASH

1.1 HASH

HASH HASH SEED

-
- IP
- IP
- MAC
- MAC
- IP IP
- MAC MAC

1 HASH

	system-view	-
HASH	**link-aggregation global load-sharing algorithm** *algorithm-number*	HASH 0
HASH SEED	**link-aggregation global load-sharing seed** *seed-number*	HASH SEED 0

说明

link-aggregation global load-sharing algorithm *algorithm-number* 和 **link-aggregation global load-sharing seed** *seed-number* 命令可以单独配置，也可以同时配置。两者不同的配置组合会对聚合逐流负载分担类型的影响效果也不一样。

1.2 HASH

1.2.1 link-aggregation global load-sharing algorithm

link-aggregation global load-sharing algorithm HASH

undo link-aggregation global load-sharing algorithm

link-aggregation global load-sharing algorithm *algorithm-number*

undo link-aggregation global load-sharing algorithm

HASH 0

network-admin

algorithm *algorithm-number* *algorithm-number*

1 9

•

- **link-aggregation global load-sharing algorithm** *algorithm-number* **link-aggregation global load-sharing seed** *seed-number*

1

```
<Sysname> system-view
[Sysname] link-aggregation global load-sharing algorithm 1
```

1.2.2 link-aggregation global load-sharing seed

link-aggregation global load-sharing seed HASH

undo link-aggregation global load-sharing seed

link-aggregation global load-sharing seed *seed-number*

undo link-aggregation global load-sharing seed

HASH SEED 0

network-admin

seed *seed-number* HASH SEED *seed-number*

HASH SEED 1 7FFFFFFF

-

- **link-aggregation global load-sharing seed** *seed-number* **link-aggregation global load-sharing algorithm** *algorithm-number*

HASH SEED 1023

```
<Sysname> system-view
[Sysname] link-aggregation global load-sharing seed 3FF
```

2 — install Feature

2.1 install Feature

ESS 1107 **install** Feature

2.2 install Feature

2.2.1 install activate

install activate Feature

install activate feature *filename*&<1-30> **slot** *slot-number*

network-admin

feature Feature

filename .bin 1 63

&<1-30> 30

slot *slot-number* IRF

- Feature
- Feature Feature
  install commit

- Feature
  flash:/xx.bin
- **slot**

1 feature

```
<H3C>install activate feature flash:/feature.bin slot 1
Verifying the file flash:/feature.bin on slot 1....Done.
Upgrade summary according to following table:

flash:/feature.bin.bin
  Running Version            New Version
  None                       ESS 1107

  Slot                       Upgrade Way
  1                          Service Upgrade
Upgrading software images to compatible versions. Continue? [Y/N]:y
This operation maybe take several minutes, please wait.................Done.
```

2.2.2 install deactivate

install deactivate Feature

install deactivate feature *filename*&<1-30> **slot** *slot-number*

network-admin

filename Feature .bin 1 63
&<1-30> 30
slot *slot-number* IRF

Feature Feature
Feature **install commit**

Feature
flash:/xx.bin

1 feature

```
<H3C>install deactivate feature flash:/feature.bin slot 1
```

3 — ARP

3.1 ARP

ARP / MAC VLAN ARP
IP ARP ARP ARP
ARP MAC “ -
/MAC ” **mac-address multiport** MAC “ IP
/ ” **mac-address multicast**
ARP IP VLAN IP
MAC/ MAC ARP
ARP multiport ARP
MAC
“ - ” “ ”

2 ARP

		system-view	-
MAC	MAC	**mac-address multiport** *mac-address* **interface** *interface-list* **vlan** *vlan-id*	
MAC	MAC	**mac-address multicast** *mac-address* **interface** *interface-list* **vlan** *vlan-id*	
	ARP	**arp multiport** *ip-address mac-address vlan-id* [**vpn-instance** *vpn-instance-name*]	*mac-address*, *vlan-id* MAC MAC *mac-address*, *vlan-id*

3.2 ARP

3.2.1 arp multiport

arp multiport ARP

undo arp ARP

arp multiport *ip-address mac-address vlan-id* [**vpn-instance** *vpn-instance-name*]

undo arp *ip-address* [*vpn-instance-name*]

ARP

network-admin

ip-address ARP IP

mac-address ARP MAC H-H-H

vlan-id ARP VLAN 1 4094

vpn-instance *vpn-instance-name* ARP VPN *vpn-instance-name* MPLS L3VPN VPN 1 31 VPN ARP

- *vlan-id* ARP VLAN *vlan-id* VLAN ID
- ARP VLAN VLAN

- *vlan-id* IP ip-address ARP
- / MAC ARP

ARP IP 202.38.10.2 MAC 00e0-fc01-0000 ARP VLAN 10

```
<Sysname> system-view
[Sysname] arp multiport 202.38.10.2 00e0-fc01-0000 10
```

- **display arp multiport**
- **reset arp multiport**

4 — VLAN

4.1 VLAN

VLAN ACL

-
- VLAN VLAN

3 VLAN

	system-view	-
VLAN VLAN	**interface vlan-interface** *vlan-interface-id*	VLAN VLAN VLAN
	packet-filter filter [**route** | **all**]	VLAN

4.2 VLAN

4.2.1 packet-filter filter(vlan-interface view)

packet-filter filter VLAN

undo packet-filter filter

packet-filter filter [**route** | **all**]

undo packet-filter filter

VLAN

VLAN

network-admin

route VLAN
all VLAN VLAN

VLAN 2 route VLAN 2

```
<Sysname> system-view
[Sysname] interface vlan-interface 2
[Sysname-Vlan-interface2] packet-filter filter route
```

5 —QCN

5.1 QCN

QCN Quantized Congestion Notification
QCN

5.1.1 QCN

- RP Reaction Point QCN
- CP Congestion Point QCN
- CNM Congestion Notification Message CP CP
  RP
- CCF Congestion Controlled Flow RP
  dot1p
  CP
- CN-TAG Congestion Notification Tag
- CNP Congestion Notification Priority VLAN dot1p
  dot1p QCN CNP
  CNPV Congestion Notification Priority Value
- CND Congestion Notification Domain RP CNP QCN
  CP
- CPID Congestion Point Identifier CP 8

- QntzFb Quantized Feedback 6

5.1.2 QCN

1.

RP CN-TAG CN-TAG
CCF

1 QCN

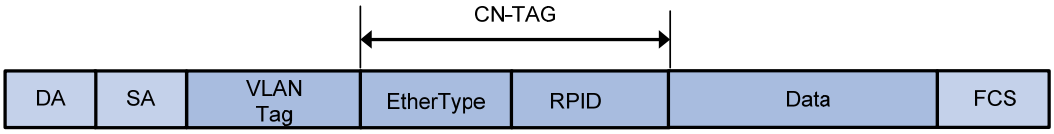

1 CN-TAG

- EtherType 2bytes QCN 0x22E9
- RPID 2bytes RP RP CNM

CN-TAG RP CN-TAG CND CND
CN-TAG CND CN-TAG
RP CN-TAG CN-TAG RP
RPID CN-TAG CNM CNM
CN-TAG RPID 0 RP CNM

2.CNM

CP CNM RP CNM
MAC MAC MAC MAC CNM RP
VLAN tag CN-TAG CNM CNM PDU 2

2 CNM PDU

- PDU EtherType 2bytes PDU 0x22E7
- CNM PDU 24 88bytes

3 CNM PDU

	Octet	Length
Version	1	4bits
ReservedV	1 2	6bits
Quantized Feedback	2	6bits
Congestion Point Identifier (CPID)	3	8
cnmQOffset	11	2
cnmQDelta	13	2
Encapsulated priority	15	2
Encapsulated destination MAC address	17	6
Encapsulated MSDU length	23	2
Encapsulated MSDU	25	0 64

CNM PDU

- Version 4bits 0
- ReserverV 6bits 0
- Quantized Feedback 6bits Fb CP Fb
- CPID 8bytes CP
- cnmQoffset 2bytes
- cnmQdelta 2bytes
- Encapsulated priority 2bytes CNM
- Encapsulated destination MAC address 6bytes CNM MAC

- Encapsulated MSDU length 2bytes CNM
- Encapsulated MSDU 0 64bytes CNM

5.1.3 QCN

4 QCN

(1) CP QCN CNM RP

(2) RP RP

CNM

4 QCN

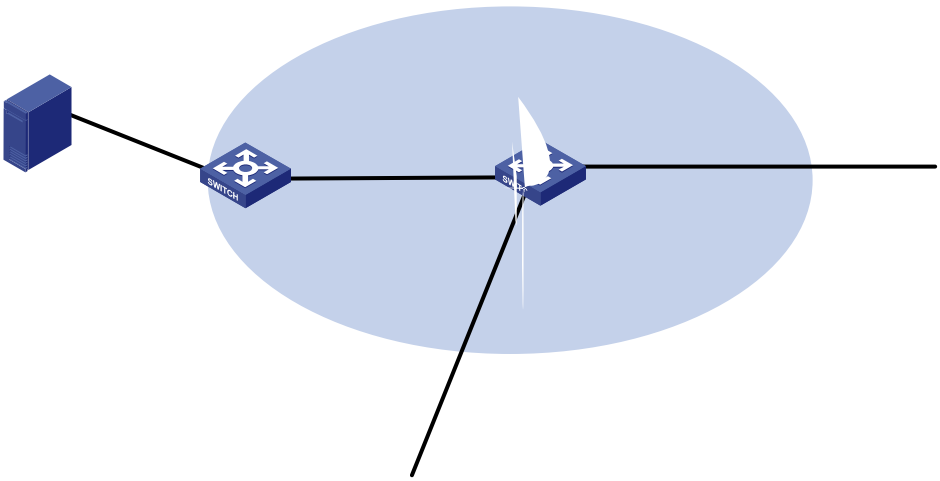

- Fb CP CNM RP

5 CP

Qδ = Q – Qold

Fb = – (Qoff + wQδ)

w Qδ Fb

CP Fb CNM Fb ≥ 0 Fb < 0

CNM RP |Fb|

QntzFb CNM

- Fb < - Qeq × (2 × w + 1)) QntzFb 63
- QntzFb = - Fb × 63 / (Qeq × (2 × w + 1))

2.RP

RP

- CNM Fb |Fb|
-

5.1.5

1. CNP

VLAN dot1p dot1p QCN

CNP CNPV

CNP

2. CND

(23) CND

CNP QCN CP RP CND

CNPV CNPV CND

CNPV CND CND

CND

CNPV CND alternate priority CND

dot1p CNPV

(24)

CND CND

LLDP

- disabled QCN
- interior CN-TAG
- interiorReady CN-TAG
- edge CNPV CN-TAG

2.

注意

- 修改优先级映射表后，可能导致原来设置的 CP 端不能对指定 CNPV 的流量进行检测。
- 配置多个 dot1p 优先级映射入同一个队列时，由于拥塞检测是对队列进行检测，因此多个 dot1p 的流量会相互影响。配置时，需要用户保证不将非 QCN 的 dot1p 优先级流量映射到使能了拥塞检测的队列。
- MQC 配置中的 remark 动作也会影响映射关系。有关 remark 动作的详细介绍请参见“ACL 和 QoS 配置指导”中的“QoS”。
- 配置的信任模式必须信任 dot1p 优先级。有关信任模式的详细介绍请参见“ACL 和 QoS 配置指导”中的“QoS”。
- 接口缺省优先级不能与 CNPV 配置相同。有关缺省优先级的详细介绍请参见“ACL 和 QoS 配置指导”中的“QoS”。

CNPV

CNPV QoS

“ ACL QoS ” “ QoS ”

5.1.6

QCN IEEE802.1Qau-Congestion Notification

5.2 QCN

4 QCN

QCN			5.3
CND	CND		5.4.1
	CND		5.4.2
			5.5

5.3 QCN

QCN QCN

5.3.1

LLDP LLDP “ -
” “ LLDP ”

5.3.2 QCN

QCN QCN

QCN QCN LLDP LLDP
CN TLV CN TLV

5 QCN

	system-view	-
QCN	**qcn enable**	QCN

5.4 CND

5.4.1 CND

CND CND
dot1p CNPV CND CNPV
CND CND 1 2 3 0

6 CND

dot1p	CNPV	
0	N/A	N/A
1	1	0
2	2	0
3	3	0
4	NA	NA
5	NA	NA
6	NA	NA
7	NA	NA

7 CND

	system-view	-
CND	**qcn priority** *priority-value* { **admin** [**defense-mode** { **disabled** | **edge** | **interior** | **interior-ready** } **alternate** *alternate-value*] | **auto** }	CND

5.4.2 CND

CND CND

CND CND

8 CND

	system-view	-
	interface *interface-type interface-number*	-
CND	**qcn port priority** *priority-value* { **admin** [**defense-mode** { **disabled** | **edge** | **interior** | **interior-ready** } **alternate** *alternate-value*] | **auto** }	

5.5

CND QCN

profile

CND

9

	system-view	-
profile	**qcn profile** *profile-id* **set-point** *length-value* **weight** *weight-value*	profile profile ID 0 26000bytes 1 profile
CND profile	**qcn priority** *priority-value* **profile** *profile-id*	CND profile

5.6 QCN

display QCN

reset CP

10 QCN

QCN	**display qcn global** [**slot** *slot-number*]
QCN	**display qcn interface** [*interface-type interface-number*]
QCN profile	**display qcn profile** [*profile-id* | **default**] [**slot** *slot-number*]

CP	**display qcn cp interface** [*interface-type interface-number*] [**priority** *priority-value*]
CP	**reset qcn cp interface** [*interface-type interface-number*] [**priority** *priority-value*]

5.7 QCN

5.7.1 QCN

1.

RP1 RP2 VLAN

RP1 RP2 QCN Switch A SwitchB SwitchC QCN

RP1 RP2 Switch A SwitchB SwitchC CNPV 1 CND

Switch A SwitchB SwitchC dot1p 1

CNM

2.

1-1 QCN

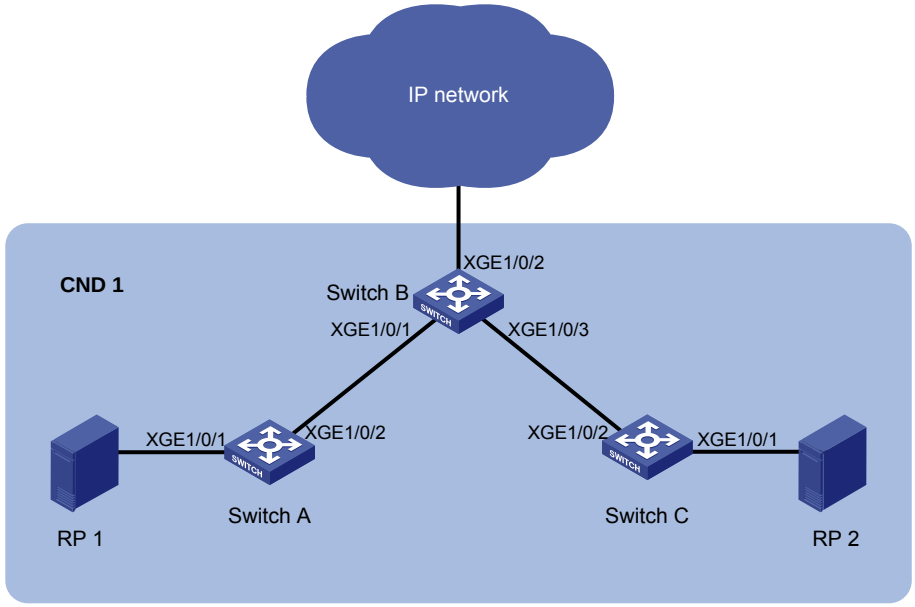

3.

(1) Switch A

VLAN GigabitEthernet1/0/1 VLAN 100

```
<SwitchA> system-view
[SwitchA] vlan 100
[SwitchA-vlan100] port gigabitethernet 1/0/1
[SwitchA-vlan100] quit
```

Switch A VLAN 100 Switch B GigabitEthernet1/0/2 Trunk VLAN 100

```
[SwitchA] interface gigabitethernet 1/0/2
[SwitchA-GigabitEthernet1/0/2] port link-type trunk
[SwitchA-GigabitEthernet1/0/2] port trunk permit vlan 100
[SwitchA-GigabitEthernet1/0/2] quit
```

LLDP GigabitEthernet1/0/1 GigabitEthernet1/0/2 CN-TLV

```
[SwitchA] lldp global enable
[SwitchA] interface gigabitethernet 1/0/1
[SwitchA-GigabitEthernet1/0/1] lldp tlv-enable dot1-tlv congestion-notification
[SwitchA-GigabitEthernet1/0/1] quit
[SwitchA] interface gigabitethernet 1/0/2
[SwitchA-GigabitEthernet1/0/2] lldp tlv-enable dot1-tlv congestion-notification
[SwitchA-GigabitEthernet1/0/2] quit
```

QCN Switch A CNPV 1 CND LLDP

```
[SwitchA] qcn enable
[SwitchA] qcn priority 1 auto
```

(2) Switch B

VLAN 100

```
<SwitchB> system-view
[SwitchB] vlan 100
[SwitchB-vlan100] quit
```

Switch B VLAN 100 Trunk VLAN 100

```
[SwitchB] interface gigabitethernet 1/0/1
[SwitchB-GigabitEthernet1/0/1] port link-type trunk
[SwitchB-GigabitEthernet1/0/1] port trunk permit vlan 100
[SwitchB-GigabitEthernet1/0/1] quit
[SwitchB] interface gigabitethernet 1/0/2
[SwitchB-GigabitEthernet1/0/2] port link-type trunk
[SwitchB-GigabitEthernet1/0/2] port trunk permit vlan 100
[SwitchB-GigabitEthernet1/0/2] quit
[SwitchB] interface gigabitethernet 1/0/3
[SwitchB-GigabitEthernet1/0/3] port link-type trunk
[SwitchB-GigabitEthernet1/0/3] port trunk permit vlan 100
[SwitchB-GigabitEthernet1/0/3] quit
```

LLDP GigabitEthernet1/0/1 GigabitEthernet1/0/3 CN-TLV

```
[SwitchB] lldp global enable
[SwitchB] interface gigabitethernet 1/0/1
[SwitchB-GigabitEthernet1/0/1] lldp tlv-enable dot1-tlv congestion-notification
[SwitchB-GigabitEthernet1/0/1] quit
[SwitchB] interface gigabitethernet 1/0/3
[SwitchB-GigabitEthernet1/0/3] lldp tlv-enable dot1-tlv congestion-notification
[SwitchB-GigabitEthernet1/0/3] quit
```

QCN Switch B CNPV 1 CND GigabitEthernet1/0/2 CND edge 0 LLDP

```
[SwitchB] qcn enable
[SwitchB] qcn priority 1 auto
[SwitchB] interface gigabitethernet 1/0/2
[SwitchB-GigabitEthernet1/0/2] qcn port priority 1 admin defense-mode edge alternate 0
[SwitchB-GigabitEthernet1/0/2] quit
```

(2) Switch C SwitchA

4.

Switch A

```
[SwitchA] display qcn interface
Interface: GigabitEthernet1/0/1
 CNPV  Mode   Defense-mode     Alternate
-------------------------------------------------
 1     comp   interior         0

Interface: GigabitEthernet1/0/2
 CNPV  Mode   Defense-mode     Alternate
-------------------------------------------------
 1     comp   interior        0
```

SwitchB

```
[SwitchB] display qcn interface
Interface: GigabitEthernet1/0/1
 CNPV  Mode   Defense-mode     Alternate
-------------------------------------------------
 1     comp   interior         0

Interface: GigabitEthernet1/0/2
 CNPV  Mode   Defense-mode     Alternate
-------------------------------------------------
 1     admin  edge             0

Interface: GigabitEthernet1/0/3
 CNPV  Mode   Defense-mode     Alternate
-------------------------------------------------
 1     comp   interior         0
```

Switch C

```
[SwitchC] display qcn interface
Interface: GigabitEthernet1/0/1
 CNPV  Mode   Defense-mode     Alternate
-------------------------------------------------
 1     comp   interior         0

Interface: GigabitEthernet1/0/2
 CNPV  Mode   Defense-mode     Alternate
-------------------------------------------------
 1     comp   interior        0
```

5.7.2 CND

1.

- RP1 RP2 VLAN 100 RP3 RP4 VLAN 200

- RP1 RP2 Switch A Switch B Switch C CNPV 1 CND
- RP3 RP4 Switch C Switch D Switch E CNPV 5 CND
- Switch A Switch B Switch C CNPV 1 CND dot1p 1 CNM Switch A Switch B CNPV 5 CND
- Switch C SwitchD Switch E CNPV 5 CND dot1p 5 CNM Switch D Switch E CNPV 1 CND

2.

6 CND

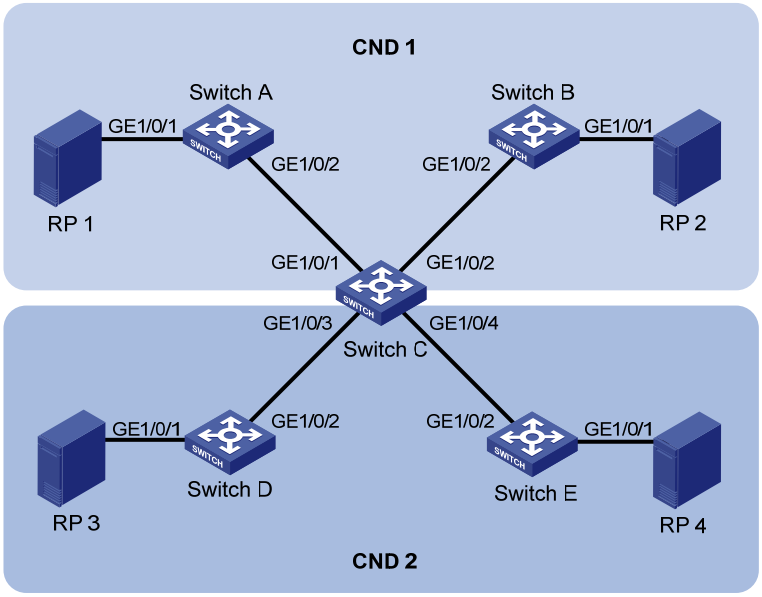

3.

(1) Switch A Switch B

VLAN GigabitEthernet1/0/1 VLAN 100

```
<SwitchA> system-view
[SwitchA] vlan 100
[SwitchA-vlan100] port gigabitethernet 1/0/1
[SwitchA-vlan100] quit
```

Switch A VLAN 100 Switch C GigabitEthernet1/0/2 Trunk VLAN 100

```
[SwitchA] interface eigabitethernet 1/0/2
[SwitchA-GigabitEthernet1/0/2] port link-type trunk
```

```
[SwitchA-GigabitEthernet1/0/2] port trunk permit vlan 100
[SwitchA-GigabitEthernet1/0/2] quit
```

LLDP GigabitEthernet1/0/1 GigabitEthernet1/0/2 CN-TLV

```
[SwitchA] lldp global enable
[SwitchA] interface gigabitethernet 1/0/1
[SwitchA-GigabitEthernet1/0/1] lldp tlv-enable dot1-tlv congestion-notification
[SwitchA-GigabitEthernet1/0/1] quit
[SwitchA] interface gigabitethernet 1/0/2
[SwitchA-GigabitEthernet1/0/2] lldp tlv-enable dot1-tlv congestion-notification
[SwitchA-GigabitEthernet1/0/2] quit
```

QCN CNPV 1 CND

```
[SwitchA] qcn enable
[SwitchA] qcn priority 1 auto
```

Switch B SwitchA

(2) Switch C

VLAN 100 VLAN 200

```
<SwitchC> system-view
[SwitchC] vlan 100
[SwitchC-vlan100] quit
[SwitchC] vlan 200
[SwitchC-vlan200] quit
```

Switch C VLAN 100 VLAN 200 Trunk VLAN 100 VLAN 200

```
[SwitchC] interface gigabitethernet 1/0/1
[SwitchC-GigabitEthernet1/0/1] port link-type trunk
[SwitchC-GigabitEthernet1/0/1] port trunk permit vlan 100 200
[SwitchC-GigabitEthernet1/0/1] quit
[SwitchC] interface gigabitethernet 1/0/2
[SwitchC-GigabitEthernet1/0/2] port link-type trunk
[SwitchC-GigabitEthernet1/0/2] port trunk permit vlan 100 200
[SwitchC-GigabitEthernet1/0/2] quit
[SwitchC] interface gigabitethernet 1/0/3
[SwitchC-GigabitEthernet1/0/3] port link-type trunk
[SwitchC-GigabitEthernet1/0/3] port trunk permit vlan 100 200
[SwitchC-GigabitEthernet1/0/3] quit
[SwitchC] interface gigabitethernet 1/0/4
[SwitchC-GigabitEthernet1/0/4] port link-type trunk
[SwitchC-GigabitEthernet1/0/4] port trunk permit vlan 100 200
[SwitchC-GigabitEthernet1/0/4] quit
```

LLDP CN-TLV

```
[SwitchC] lldp global enable
[SwitchC] interface gigabitethernet 1/0/1
[SwitchC-GigabitEthernet1/0/1] lldp tlv-enable dot1-tlv congestion-notification
[SwitchC-GigabitEthernet1/0/1] quit
[SwitchC] interface gigabitethernet 1/0/2
[SwitchC-GigabitEthernet1/0/2] lldp tlv-enable dot1-tlv congestion-notification
[SwitchC-GigabitEthernet1/0/2] quit
```

```
[SwitchC] interface gigabitethernet 1/0/3
[SwitchC-GigabitEthernet1/0/3] lldp tlv-enable dot1-tlv congestion-notification
[SwitchC-GigabitEthernet1/0/3] quit
[SwitchC] interface gigabitethernet 1/0/4
[SwitchC-GigabitEthernet1/0/4] lldp tlv-enable dot1-tlv congestion-notification
[SwitchC-GigabitEthernet1/0/4] quit
```

QCN CNPV 1 5 CND GigabitEthernet1/0/1 GigabitEthernet 1/0/2 CNPV 5 edge 4

```
[SwitchC] qcn enable
[SwitchC] qcn priority 1 auto
[SwitchC] qcn priority 5 admin defense-mode interior-ready alternate 4
[SwitchC] interface gigabitethernet 1/0/1
[SwitchC-GigabitEthernet1/0/1] qcn port priority 5 admin defense-mode edge alternate 4
[SwitchC-GigabitEthernet1/0/1] quit
[SwitchC] interface gigabitethernet 1/0/2
[SwitchC-GigabitEthernet1/0/2] qcn port priority 5 admin defense-mode edge alternate 4
[SwitchC-GigabitEthernet1/0/2] quit
```

(3) Switch D Switch E

VLAN GigabitEthernet1/0/1 VLAN 200

```
<SwitchD> system-view
[SwitchD] vlan 200
[SwitchD-vlan200] port gigabitethernet 1/0/1
[SwitchD-vlan200] quit
```

Switch D VLAN 100 Switch C GigabitEthernet1/0/2 Trunk VLAN 100

```
[SwitchD] interface gigabitethernet 1/0/2
[SwitchD-GigabitEthernet1/0/2] port link-type trunk
[SwitchD-GigabitEthernet1/0/2] port trunk permit vlan 200
[SwitchD-GigabitEthernet1/0/2] quit
```

QCN CNPV 5 CND

```
[SwitchD] qcn enable
[SwitchD] qcn priority 5 admin defense-mode interior-ready alternate 4
```

Switch E SwitchD

4.

Switch A

```
[SwitchA] display qcn interface
Interface: GigabitEthernet1/0/1
 CNPV  Mode   Defense-mode     Alternate
-------------------------------------------------
 1     comp   interior        0

Interface: GigabitEthernet1/0/2
 CNPV  Mode   Defense-mode     Alternate
-------------------------------------------------
 1     comp   interior        0
```

Switch B

```
[SwitchB] display qcn interface
Interface: GigabitEthernet1/0/1
 CNPV  Mode   Defense-mode     Alternate
-------------------------------------------------
 1     comp   interior         0

Interface: GigabitEthernet1/0/2
 CNPV  Mode   Defense-mode     Alternate
-------------------------------------------------
 1     comp   interior        0
```

Switch C

```
[SwitchC] display qcn interface
Interface: GigabitEthernet1/0/1
 CNPV  Mode   Defense-mode     Alternate
-------------------------------------------------
 1     comp   interior-ready   0
 5     admin  edge             4

Interface: GigabitEthernet1/0/2
 CNPV  Mode   Defense-mode     Alternate
-------------------------------------------------
 1     comp   interior-ready   0
 5     admin  edge             4

Interface: GigabitEthernet1/0/3
 CNPV  Mode   Defense-mode     Alternate
-------------------------------------------------
 1     comp   edge             0
 5     comp   interior-ready   4

Interface: GigabitEthernet1/0/4
 CNPV  Mode   Defense-mode     Alternate
-------------------------------------------------
 1     comp   edge             0
 5     comp   interior-ready   4
```

Switch D

```
[SwitchD] display qcn interface
Interface: GigabitEthernet1/0/1
 CNPV  Mode   Defense-mode     Alternate
-------------------------------------------------
 5     comp   interior-ready   4

Interface: GigabitEthernet1/0/2
 CNPV  Mode   Defense-mode     Alternate
-------------------------------------------------
 5     comp   interior-ready   4
```

Switch E

```
[SwitchE] display qcn interface
Interface: GigabitEthernet1/0/1
 CNPV  Mode   Defense-mode     Alternate
-------------------------------------------------
 5     comp   interior-ready   4

Interface: GigabitEthernet1/0/2
 CNPV  Mode   Defense-mode     Alternate
-------------------------------------------------
 5     comp   interior-ready   4
```

5.8 QCN

5.8.1 display qcn cp interface

display qcn cp interface CP CND proflie ID CNM

display qcn cp interface [*interface-type interface-number*] [**priority** *priority-value*]

network-admin
network-operator

interface-type interface-number

priority *priority-value* CNPV 0 7 CND

#

```
<Sysname> display qcn cp interface
Interface: GigabitEthernet1/0/1
 CNPV 1: CP profile 1
  Passed   : 100000 (Packets)
  Discarded: 10 (Packets)
  CNM count: 3000 (Packets)
CNPV 2: CP profile default
  Passed   : 200000 (Packets)
  Discarded: 20 (Packets)
  CNM count: 3000 (Packets)

Interface: GigabitEthernet1/0/2
```

```
CNPV 1: CP profile 1
 Passed   : 100000 (Packets)
 Discarded: 10 (Packets)
 CNM count: 3000 (Packets)
CNPV 2: CP profile default
 Passed   : 200000 (Packets)
 Discarded: 20 (Packets)
 CNM count: 3000 (Packets)
```

11 display qcn cp interface

Interface	
CNPV	CNPV CDN profile
Passed	
Discarded	
CNM count	CNM

- **reset qcn cp interface**

5.8.2 display qcn global

display qcn global QCN

display qcn global [**slot** *slot-number*]

network-admin
network-operator

slot *slot-number* QCN *slot-number* IRF
IRF3 PEX QCN

QCN

```
<Sysname> display qcn global slot 1
Slot 1:
QCN global status: Enabled
 CNPV  Mode   Defense-mode    Alternate  CP-profile
```

```
------------------------------------------------
1     admin  interior-ready  4          default
2     auto   -               0          1
3     auto   -               0          1
```

12 display qcn global

QCN global status	QCN • Enabled • Disabled
CNPV	
Mode	• auto LLDP • admin
Defense-mode	• disabled QCN • edge CNPV • interior interiorReady CN tag • interior-ready CN tag • auto “ - ”
Alternate	
CP-profile	CP profile ID

5.8.3 display qcn interface

display qcn interface QCN

display qcn interface [*interface-type interface-number*]

network-admin
network-operator

interface-type interface-number

QCN

```
<Sysname> display qcn interface
Interface: GigabitEthernet1/0/1
 CNPV  Mode   Defense-mode     Alternate
-------------------------------------------------
 1     comp   interior-ready   4
 2     admin  edge             0
 3     auto   edge             0

Interface: GigabitEthernet1/0/2
 CNPV  Mode   Defense-mode     Alternate
-------------------------------------------------
 1     comp   interior-ready   4
 2     admin  edge             0
 3     auto   edge             0
```

13 display qcn interface

Interface	
CNPV	
Mode	• auto LLDP • admin • comp
Defense-mode	
Alternate	

5.8.4 display qcn profile

display qcn profile QCN profile

display qcn profile [*profile-id* | **default**] [**slot** *slot-number*]

network-admin
network-operator

profile-id profile *profile-id* 1 128

default profile ID 0 profile

slot *slot-number* QCN profile *slot-number* IRF IRF3 PEX QCN profile

profile-id **default** profile

QCN profile

```
<Sysname> display qcn profile slot 1
Slot 1:
 Profile  Set-point   Weight
-------------------------------------------------
 default  26000       1
 1        30000       2
```

14 display qcn profile

Profile	CP profile
Set-point	byte
Weight	

5.8.5 qcn enable

qcn enable QCN

undo qcn enable QCN

qcn enable

undo qcn enable

QCN

network-admin

QCN QCN

QCN

```
<Sysname> system-view
[Sysname] qcn enable
```

5.8.6 qcn port priority

qcn port priority

undo qcn port priority

qcn port priority *priority-value* { **admin** [**defense-mode** { **disabled** | **edge** | **interior** | **interior-ready** } **alternate** *alternate-value*] | **auto** }

undo qcn port priority *priority-value*

network-admin

priority-value CNPV 0 7

admin

defense-mode disabled

disabled QCN

edge CNPV

interior CN tag

interior-ready CN tag

alternate *alternate-value* 0 7 0 CNPV

auto LLDP

CND

CNPV 1 CND GigabitEthernet1/0/1 disabled 0

```
<Sysname> system-view
[Sysname] qcn priority 1 auto
[Sysname] interface gigabitethernet 1/0/1
[Sysname-GigabitEthernet1/0/1] qcn port priority 1 admin defense-mode disabled alternate 0
```

GigabitEthernet1/0/2 LLDP

```
<Sysname> system-view
[Sysname] qcn priority 2 admin
```

```
[Sysname] interface gigabitethernet 1/0/2
                  hernet1/0/2] qcn port priority 2 auto
```

5.8.7

priority CNPV CND

n [**defense-mode** { **disabled** | **edge** | **interior** | **interior-ready** }
e *alternate-value*] | **auto** }
y-value

CND

0 7 CNPV admin

CN tag

0 7 0

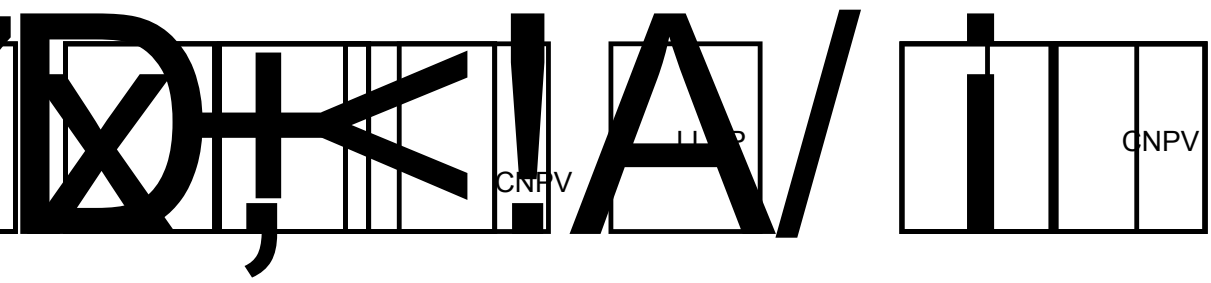

CNPV CNPV CNPV

CND CNPV 1 disabled
0

```
<Sysname> system-view
[Sysname] qcn priority 1 admin defense-mode disabled alternate 0
```

- **qcn port priority**

5.8.8 qcn priority profile

qcn priority profile CND profile
undo qcn priority proflie

qcn priority *priority-value* **profile** *profile-id*
undo qcn priority *priority-value* **proflie**

CND profile

network-admin

priority-value CNPV 0 7
profile-id profile ID profile ID

CND profile profile

CNPV 2 CND profile 2

```
<Sysname> system-view
[Sysname] qcn priority 2 profile 2
```

5.8.9 qcn proflie

qcn profile profile
undo qcn profile profile

qcn profile *profile-id* **set-point** *length-value* **weight** *weight-value*
undo qcn profile *profile-id*

profile

network-admin

profile-id profile ID profile ID 0 *profile-id* 1 128

set-point *length-value* byte *length-value* 16644 8320000

weight *weight-value* *weight-value* -2 5

profile ID 1 28000bytes 1

```
<Sysname> system-view
[Sysname] qcn profile 1 set-point 28000 weight 1
```

5.8.10 reset qcn cp interface

reset qcn cp interface CP

reset qcn cp interface [*interface-type interface-number*] [**priority** *priority-value*]

network-admin

interface-type interface-number

priority *priority-value* CNPV 0 7 CNPV

CP

```
<Sysname> reset qcn cp interface
```

- **display qcn cp interface**

6 — SSL 3.0

6.1 SSL 3.0

SSL 3.0 SSL 3.0

- SSL SSL 3.0 SSL TLS 1.0
- SSL SSL SSL SSL 3.0 SSL **version ssl 3.0** SSL 3.0 SSL SSL 3.0

提示

如果对端设备仅支持 SSL 3.0 版本，为保证网络互通，本端设备不能关闭 SSL 3.0 版本。为提高安全性，建议对端设备升级至 TLS 1.0 版本。

15 SSL 3.0

	system-view	-
SSL 3.0	**ssl version ssl3.0 disable**	SSL 3.0

6.2 SSL 3.0

6.2.1 ssl version ssl3.0 disable

ssl version ssl3.0 disable SSL 3.0

undo ssl version ssl3.0 disable

ssl version ssl3.0 disable

undo ssl version ssl3.0 disable

SSL 3.0

network-admin

SSL 3.0

```
<Sysname> system-view
[Sysname] ssl version ssl3.0 disable
```

7 — / Monitor Link

7.1 / Monitor Link

Monitor Link Monitor Link
Monitor Link Monitor Link Monitor Link
Monitor Link

16 Monitor Link

	system-view	-
Monitor Link	**undo monitor-link disable**	Monitor Link

7.2 / Monitor Link

7.2.1 monitor-link disable

monitor-link disable Monitor Link
undo monitor-link disable Monitor Link

monitor-link disable
undo monitor-link disable

Monitor Link

network-admin

Monitor Link Monitor Link Monitor Link Monitor Link Monitor Link down

Monitor Link

```
<Sysname> system-view
[Sysname] monitor-link disable
```

8 —

8.1

17

	system-view	-
	traffic behavior *behavior-name*	
	mirror-to { **cpu** | **interface** *interface-type interface-number* [**destination-ip** *destination-ip-address* **source-ip** *source-ip-address* [**dscp** *dscp-value* | **vlan** *vlan-id* | **vrf-instance** *vrf-instance-name*] *] }	IP

8.2

8.2.1 mirror-to

mirror-to { **cpu** | **interface** *interface-type interface-number* }

mirror-to { **cpu** | **interface** *interface-type interface-number* [**destination-ip** *destination-ip-address* **source-ip** *source-ip-address* [**dscp** *dscp-value* | **vlan** *vlan-id* | **vrf-instance** *vrf-instance-name*] *] }

network-admin

cpu CPU CPU CPU

interface *interface-type interface-number* *interface-type interface-number*

destination-ip *destination-ip-address* IP

source-ip *source-ip-address* IP

dscp *dscp-value* DSCP

vrf-instance *vrf-instance-name* VRF

vlan *vlan-id* VLAN ID *vlan-id* VLAN 1 4094

mirror-to **undo mirror-to**

1 CPU

```
<Sysname> system-view
[Sysname] traffic behavior 1
[Sysname-behavior-1] mirror-to cpu
```

1 GigabitEthernet1/0/1

```
<Sysname> system-view
[Sysname] traffic behavior 1
[Sysname-behavior-1] mirror-to interface gigabitethernet 1/0/1
```

1 GigabitEthernet1/0/1 IP 1.1.1.1 IP 2.2.2.2 DSCP 20

```
<Sysname> system-view
[Sysname] traffic behavior 1
[Sysname-behavior-1] mirror-to interface gigabitethernet 1/0/1 destination-ip 1.1.1.1
source-ip 2.2.2.2 dscp 20
```

9 —

9.1

-
-

18

	system-view	-
	info-center syslog min-age *min-age*	

9.2

9.2.1 info-center syslog min-age

info-center syslog min-age

undo info-center syslog min-age

info-center syslog min-age *min-age*
undo info-center syslog min-age

network-admin

min-age 1 8760

-
-

168

```
<Sysname> system-view
[Sysname] info-center syslog min-age 168
```

10 —Packet Capture


说明

如需使用本特性，请先安装 packet-capture 软件包。

10.1 Packet Capture

Packet Capture

pcap

10.2 Packet Capture

Packet Capture

Packet Capture

http://wiki.wireshark.org/CaptureFilters

10.2.1

3.

19

	Packet Capture	ip ip6 arp tcp udp icmp
		• src • dst • src or dst
		• host • net • port • portrange
	-	• broadcast • multicast • less • greater • len • vlan VLAN

4.

broadcast multicast

20

	port 23 23

	“ - ” portrange 100-200 100 200
IPv4	src 1.1.1.1 IPv4 1.1.1.1 host
IPv6	dst host 1::1 IPv6 1::1
IPv4	IPv4 IPv4 • src 1.1.1 IPv4 1.1.1 • src net 1.1.1.0/24 IPv4 1.1.1.0/24
IPv6	IPv6 dst net 1::/64 IPv6 1::/64 IPv6 net

10.2.2

1.

21

! not	
&& and	
|| or	

2.

22

+	
-	
*	
/	
&	1 1
|	1 1
<<	

>>	
[ ]	ip[6] IP 6

3.

23

=	ip[6]=0x1c IPv4 6 0x1c
!=	len!=60 60
>	len>100 100
<	len<100 100
>=	greater len>=100 100
<=	less len<=100 100

10.2.3

1.

not port 23 and not port 22

23 22 port 23 or icmp 23 icmp

src 192.168.56.1 or 192.168.27 IPv4 192.168.56.1 IPv4 192.168.27 “ src 192.168.56.1 or src 192.168.27 ”

2. *expr relop expr*

expr *relop*

len+100>=200 100

3. *proto* [*expr*:*size*]

“ [ ] ” *proto* *expr* *size* 1 *proto* [*expr*:*size*]

proto *expr* *size*

ip[0]&0xf != 5 0x0f 5 IP

expr:*size* icmptype ICMP
icmp[icmptype]=0x08 icmp type 0x08

4. vlan *vlan_id*

vlan *vlan_id* VLAN
vlan 1 and ip6 VLAN 1 IPv6

- VLAN vlan
  icmp vlan icmp
- vlan vlan
  vlan
  - !tcp and vlan 1 vlan tcp vlan 1
  - icmp and vlan 1 icmp vlan icmp vlan 1 vlan
    1

10.3 Packet Capture

Packet Capture

Packet
Capture http://wiki.wireshark.org/DisplayFilters

10.3.1

- eth ip ipv6 tcp udp icmp http ftp telnet ftp
  ftp
- “ . ” tcp.flags.syn tcp flags
  syn tcp.port tcp port
  24

24

	• ip.len le 1500 • ip.len le 02734 • ip.len le 0x436 IP 1500

	tcp.flags.syn tcp.flags.syn
MAC 6	MAC “ : ” “ . ” “ - ” • eth.dst==ff:ff:ff:ff:ff:ff • eth.dst==ff-ff-ff-ff-ff-ff • eth.dst ==ffff.ffff.ffff MAC ffff.ffff.ffff
IPv4	IPv4 • ip.addr==192.168.0.1 IP 192.168.0.1 • ip.addr==129.111.0.0/16 IP 129.111
IPv6	IPv6 • ipv6.addr==1::1 IPv6 1::1 • ipv6.addr==1::/64 IPv6 1::/64
	http.request version=="HTTP/1.1" http request version HTTP/1.1

10.3.2

1.

25

! not	
&& and	
|| or	
[ ]	“ 4. proto[…] ”

2.

26

eq ==	ip.src==10.0.0.5 IP 10.0.0.5
ne !=	ip.src!=10.0.0.5 IP 10.0.0.5
gt >	frame.len>100 100
lt <	frame.len<100 100
ge >=	frame.len ge 0x100 256
le <=	frame.len le 0x100 256

10.3.3

1.

ftp or icmp ftp icmp

2.

ip.len<=28 IP

28 IP

3.

tcp.flags.syn tcp.flags.syn

4. proto[…]

“ [ ] “ proto[…]

proto

- [n:m] n m n m eth.src[0:3]==00:00:83 MAC 0x00 0x00 0x83
- [n-m] n m n m m-n+1 eth.src[1-2]==00:83 MAC 0x00 0x83

- [n] [n:1] n eth.src[2] == 83
  MAC 0x83

10.4 Packet Capture

27 Packet Capture

		10.5.1
		10.5.2

10.5

10.5.1

Packet Capture CPU
ACL QoS CPU
“ ” “ ”

28

	packet-capture interface *interface-type interface-number* [**capture-filter** *capt-expression* | **limit-captured-frames** *limit* | **limit-frame-size** *bytes* | **autostop filesize** *kilobytes* | **autostop duration** *seconds* | **autostop files** *numbers* | **capture-ring-buffer filesize** *kilobytes* | **capture-ring-buffer duration** *seconds* | **capture-ring-buffer files** *numbers*] * **write** *filepath* [**raw** | { **brief** | **verbose** }] *	Ctrl+C
	packet-capture interface *interface-type interface-number* [**capture-filter** *capt-expression* | **display-filter** *disp-expression* | **limit-captured-frames** *limit* | **limit-frame-size** *bytes* | **autostop duration** *seconds*] * [**raw** | { **brief** | **verbose** }] *	

10.5.2

pcap pcapng

29

	packet-capture read *filepath* [**verbose**] [**display-filter** *disp-expression*] [**raw** | { **brief** | **verbose** }] *	-

10.6

10.6.1

1.

Switch A Gigabitethernet1/0/1 192.168.56.0/24 Internet CPU

2.

1-2

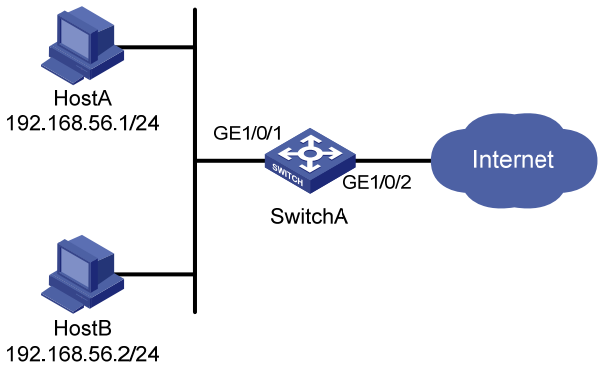

3.

IPv4 ACL 3000 IP 192.168.56.0/24

```
<SwitchA> system-view
[SwitchA] acl number 3000
[SwitchA-acl-adv-3000] rule permit ip source 192.168.56.0 0.0.0.255
```

behavior1 CPU

```
<SwitchA> system-view
[SwitchA] traffic behavior behavior1
[SwitchA-behavior-behavior1] mirror-to cpu
```

classifier1 ACL3000

```
<SwitchA> system-view
[SwitchA] traffic classifier classifier1
[SwitchA-classifier-class1] if-match acl 3000
```

user1 user1 classifier1 behavior1

```
<SwitchA> system-view
[SwitchA] qos policy user1
[SwitchA-qospolicy-user1] classifier classifier1 behavior behavior1
```

user1 GigabitEthernet1/0/1

```
<SwitchA> system-view
[SwitchA] interface gigabitethernet 1/0/1
[SwitchA-GigabitEthernet1/0/1] qos apply policy user1 inbound
```

Gigabitethernet1/0/1

```
<DeviceA> packet-capture interface gigabitethernet1/0/1
Capturing on Gigabitethernet1/0/1
  1   0.000000 192.168.56.1 -> 192.168.56.2 TCP 62 6325 > telnet [SYN] Seq=0 Win
=65535 Len=0 MSS=1460 SACK_PERM=1
  2   0.000061 192.168.56.1 -> 192.168.56.2 TCP 60 6325 > telnet [ACK] Seq=1 Ack
=1 Win=65535 Len=0
  3   0.024370 192.168.56.1 -> 192.168.56.2 TELNET 60 Telnet Data ...
  4   0.024449 192.168.56.1 -> 192.168.56.2 TELNET 78 Telnet Data ...
  5   0.025766 192.168.56.1 -> 192.168.56.2 TELNET 65 Telnet Data ...
  6   0.035096 192.168.56.1 -> 192.168.56.2 TELNET 60 Telnet Data ...
  7   0.047317 192.168.56.1 -> 192.168.56.2 TCP 60 6325 > telnet [ACK] Seq=42 Ac
k=434 Win=65102 Len=0
  8   0.050994 192.168.56.1 -> 192.168.56.2 TCP 60 6325 > telnet [ACK] Seq=42 Ac
k=436 Win=65100 Len=0
  9   0.052401 192.168.56.1 -> 192.168.56.2 TCP 60 6325 > telnet [ACK] Seq=42 Ac
k=438 Win=65098 Len=0
 10   0.057736 192.168.56.1 -> 192.168.56.2 TCP 60 6325 > telnet [ACK] Seq=42 Ac
k=440 Win=65096 Len=0
10 packets captured
```

10.6.2

1.

- DeviceA Gigabitethernet 1/0/1 10
  a.pcap
- a.pcap

2.

1-3

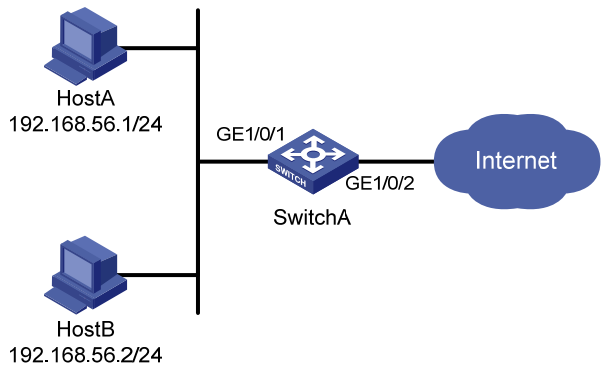

3.

Gigabitethernet1/0/1 10 a.pcap

```
<DeviceA> packet-capture interface gigabitethernet1/0/1 limit-captured-frames 10 write
flash:/a.pcap
Capturing on Gigabitethernet1/0/1
10
```

flash:/a.pcap

```
<DeviceA> packet-capture read flash:/a.pcap
  1   0.000000 192.168.56.1 -> 192.168.56.2 TCP 62 6325 > telnet [SYN] Seq=0 Win
=65535 Len=0 MSS=1460 SACK_PERM=1
  2   0.000061 192.168.56.1 -> 192.168.56.2 TCP 60 6325 > telnet [ACK] Seq=1 Ack
=1 Win=65535 Len=0
  3   0.024370 192.168.56.1 -> 192.168.56.2 TELNET 60 Telnet Data ...
  4   0.024449 192.168.56.1 -> 192.168.56.2 TELNET 78 Telnet Data ...
  5   0.025766 192.168.56.1 -> 192.168.56.2 TELNET 65 Telnet Data ...
  6   0.035096 192.168.56.1 -> 192.168.56.2 TELNET 60 Telnet Data ...
  7   0.047317 192.168.56.1 -> 192.168.56.2 TCP 60 6325 > telnet [ACK] Seq=42 Ac
k=434 Win=65102 Len=0
  8   0.050994 192.168.56.1 -> 192.168.56.2 TCP 60 6325 > telnet [ACK] Seq=42 Ac
k=436 Win=65100 Len=0
  9   0.052401 192.168.56.1 -> 192.168.56.2 TCP 60 6325 > telnet [ACK] Seq=42 Ac
k=438 Win=65098 Len=0
 10   0.057736 192.168.56.1 -> 192.168.56.2 TCP 60 6325 > telnet [ACK] Seq=42 Ac
k=440 Win=65096 Len=0
```

10.7 Packet Capture

10.7.1 packet-capture interface

packet-capture interface

packet-capture interface *interface-type interface-number* [**capture-filter** *capt-expression* | **limit-captured-frames** *limit* | **limit-frame-size** *bytes* | **autostop filesize** *kilobytes* | **autostop duration** *seconds* | **autostop files** *numbers* | **capture-ring-buffer filesize** *kilobytes* | **capture-ring-buffer duration** *seconds* | **capture-ring-buffer files** *numbers*] * **write** *filepath* [**raw** | { **brief** | **verbose** }] *

packet-capture interface *interface-type interface-number* [**capture-filter** *capt-expression* | **display-filter** *disp-expression* | **limit-captured-frames** *limit* | **limit-frame-size** *bytes* | **autostop duration** *seconds*] * [**raw** | { **brief** | **verbose** }] *

network-admin

interface *interface-type interface-number* /
capture-filter *capt-expression* *capt-expression*

“ ” “ Packet Capture ”

display-filter *disp-expression* *disp-expression*

“ ”
“ Packet Capture ”
limit-captured-frames *limit* *limit* 0
2147483647 0
10
limit-frame-size *bytes* *bytes* 64 8000

8000
autostop filesize *kilobytes* *kilobytes* 1
65536

autostop duration *seconds* *seconds* 1
2147483647

autostop files *numbers* *numbers*
2 64 **write**

a.pcap a_00001_20140211034151.pcap
a_00002_20140211034207.pcap

capture-ring-buffer filesize *kilobytes* *kilobytes*
1 65536

capture-ring-buffer duration *seconds* *seconds*
1 2147483647

capture-ring-buffer files *numbers* *numbers*
2 64
write

a.pcap

a_00001_20140211034151.pcap
a_00002_20140211034207.pcap

write *filepath* 1 64
“ ” “ ” pcap

raw

verbose
brief

- Ctrl+C
- **autostop files** **capture-ring-buffer files** **autostop filesize** **autostop filesize**
- **autostop files** **capture-ring-buffer files**
- **autostop filesize** **capture-ring-buffer filesize** **autostop filesize** **capture-ring-buffer filesize** *kilobytes*
-
- **raw** **brief** **verbose** **write** **raw** **brief** **verbose** **write**

Gigabitehernet1/0/1

```
<Sysname> packet-capture interface Gigabitehernet1/0/1
```

- **packet-capture read**

10.7.2 packet-capture read

packet-capture read

packet-capture read *filepath* [**verbose**] [**display-filter** *disp-expression*] [**raw** | { **brief** | **verbose** }] *

network-admin

read *filepath* 1 64
“ ” “ ” pcap pcapng

display-filter *disp-expression* *disp-expression*

Packet Capture
raw

brief
verbose

- Packet Capture
  Ctrl+C
- Packet Capture pcap pcapng
- **raw** **brief** **verbose**

flash:/test **aaaa.pcap**

```
<Sysname> packet-capture read flash:/test/aaaa.pcap
```

- **packet-capture interface**

11 — OpenFlow

11.1 OpenFlow

OpenFlow
OpenFlow OpenFlow
OpenFlow

- ACL IPv6
- OpenFlow

30 OpenFlow

	system-view	-
OpenFlow	**openflow lossless enable**	OpenFlow

11.2 OpenFlow

11.2.1 openflow lossless enable

openflow lossless enable OpenFlow
undo openflow lossless enable

openflow lossless enable

undo openflow lossless enable

OpenFlow

network-admin

OpenFlow
OpenFlow OpenFlow
OpenFlow
ACL IPv6

OpenFlow

```
<Sysname> system-view
[Sysname] openflow lossless enable
```

12 — Tcl Comware

12.1

ESS 1107 Comware Tcl Tcl
ESS 1107 **cli** Tcl Comware
Tcl Comware Tcl Comware
Tcl Comware Tcl Comware
cli Tcl Comware Comware

Tcl Comware

- Comware “ ? ” Tab “ ? ”
  Tab “ ” “ CLI ”

- **cli** Tcl “ ? ” Tab
- Comware

- Comware
  - Comware
    ospf 100 ; **area 0**
  - **cli** Comware Comware
    Comware Comware
    cli "ospf 100 ; **area 0"**
  - **cli** Comware **cli ospf 100** ; **cli area 0**

31 Tcl Comware

Tcl	**tclsh**	-
Comware	*Command*	
cli Comware	**cli** *command*	

12.2

12.2.1 -cli

cli Tcl Comware

cli *command*

Tcl

network-admin

command Comware Comware

Tcl Tcl Comware Tcl
Tcl Comware Comware **cli**

Tcl Tcl Comware Comware

- Tcl Tcl Comware

```
<Sysname> tclsh
<Sysname-tcl> system-view
[Sysname-tcl] route-policy 1 permit node 10
[Sysname-tcl-route-policy-1-10] apply cost 10
can't interpret "cost" as a lambda expression
[Sysname-tcl-route-policy-1-10]
```

- Comware **cli**

```
[Sysname-tcl-route-policy-1-10] cli apply cost 10
[Sysname-tcl-route-policy-1-10]
```

Tcl Comware OSPF

-

```
[Sysname-tcl] cli "ospf 100 ; area 0"
[Sysname-tcl-ospf-100-area-0.0.0.0]
```

-

```
[Sysname-tcl] cli ospf 100 ; cli area 0
[Sysname-tcl-ospf-100-area-0.0.0.0]
```

13 —

13.1

S5560-54C-EI S5560-54C-PWR-EI LSWM2XGT8PM LSWM2SP8P LSWM2SP8PM

1 1 4

GigabitEthernet1/0/41 GigabitEthernet1/0/48

4

13.2

13.2.1 -port-configuration-mode

port-configuration-mode slot *slot-number* { **0** | **2** }

port-configuration-mode slot *slot-number* { **0** | **1** | **2** }

1

1

14 — BGP

14.1

BGP *group-name* **group-name**

14.2

14.2.1 -display bgp group

display bgp group { **ipv4** | **ipv6** } [**unicast**] [**vpn-instance** *vpn-instance-name*] [*group-name*]
display bgp group vpnv4 [**vpn-instance** *vpn-instance-name*] [*group-name*]
display bgp group { **l2vpn** | **vpnv6** } [*group-name*]

display bgp group { **ipv4** | **ipv6** } [**unicast**] [**vpn-instance** *vpn-instance-name*] [**group-name** *group-name*]
display bgp group vpnv4 [**vpn-instance** *vpn-instance-name*] [**group-name** *group-name*]
display bgp group { **l2vpn** | **vpnv6** } [**group-name** *group-name*]

group-name **group-name**

15 — BGP

15.1

BGP *group-name* **group-name**

15.2

15.2.1 -display bgp peer

display bgp peer ipv4 [**unicast**] [**vpn-instance** *vpn-instance-name*] [*ip-address mask-length* | { *ip-address* | *group-name* } **log-info** | [[*ip-address*] **verbose**] [**standby slot** *slot-number*]]

display bgp peer ipv6 [**unicast**] [**vpn-instance** *vpn-instance-name*] [*ipv6-address prefix-length* | { *ipv6-address* | *group-name* } **log-info** | [[*ipv6-address*] **verbose**] [**standby slot** *slot-number*]]

display bgp peer ipv6 [**unicast**] [*ip-address mask-length* | *ip-address* **log-info** | [[*ip-address*] **verbose**] [**standby slot** *slot-number*]]

display bgp peer vpnv4 [**vpn-instance** *vpn-instance-name*] [*ip-address mask-length* | { *ip-address* | *group-name* } **log-info** | [[*ip-address*] **verbose**] [**standby slot** *slot-number*]]

display bgp peer { **l2vpn** | **vpnv6** } [*ip-address mask-length* | { *ip-address* | *group-name* } **log-info** | [[*ip-address*] **verbose**] [**standby slot** *slot-number*]]

display bgp peer ipv4 [**unicast**] [**vpn-instance** *vpn-instance-name*] [*ip-address mask-length* | { *ip-address* | **group-name** *group-name* } **log-info** | [[*ip-address*] **verbose**] [**standby slot** *slot-number*]]

display bgp peer ipv6 [**unicast**] [**vpn-instance** *vpn-instance-name*] [*ipv6-address prefix-length* | { *ipv6-address* | **group-name** *group-name* } **log-info** | [[*ipv6-address*] **verbose**] [**standby slot** *slot-number*]]

display bgp peer ipv6 [**unicast**] [*ip-address mask-length* | *ip-address* **log-info** | [[*ip-address*] **verbose**] [**standby slot** *slot-number*]]

display bgp peer vpnv4 [**vpn-instance** *vpn-instance-name*] [*ip-address mask-length* | { *ip-address* | **group-name** *group-name* } **log-info** | [[*ip-address*] **verbose**] [**standby slot** *slot-number*]]

display bgp peer { **l2vpn** | **vpnv6** } [*ip-address mask-length* | { *ip-address* | **group-name** *group-name* } **log-info** | [[*ip-address*] **verbose**] [**standby slot** *slot-number*]]

group-name **group-name**

16 — SCP

16.1

ssh server enable Stelnet SCP

ssh server enable Stelnet **scp server enable** SCP

16.2

16.2.1 -scp server enable

scp server enable SCP

undo scp server enable SCP

scp server enable
undo scp server enable

SCP

network-admin

SCP

```
<Sysname> system-view
[Sysname] scp server enable
```

17 —Monitor Link

17.1

/ Monitor Link Monitor Link Monitor link protocol status

17.2

17.2.1 display monitor-link group

display monitor-link group Monitor Link

display monitor-link group { *group-id* | **all** }

network-admin
network-operator

group-id Monitor Link *group-id* Monitor Link

all Monitor Link

Monitor Link

Monitor Link

```
<Sysname> display monitor-link group all
Monitor link protocol status: Disabled
Monitor link group 1 information:
  Group status     : N/A
  Downlink up-delay: 0(s)
  Last-up-time     : 16:38:26 2012/4/21
  Last-down-time   : 16:37:20 2012/4/21

  Member                    Role       Status
  ------------------------------------------
  GE1/0/1                   UPLINK     UP
  GE1/0/2                   DOWNLINK   UP
```

32 display monitor-link group

Monitor link protocol status:	Monitor Link • Enabled • Disabled
Monitor link group 1 information	Monitor Link 1
Group status	• Monitor Link • DOWN • UP • N/A Monitor Link Monitor Link
Downlink up-delay	Monitor Link
Last-up-time	Monitor Link up
Last-down-time	Monitor Link down
Member	Monitor Link
Role	• DOWNLINK • UPLINK
Status	DOWN UP

ESS 1106

- —
- —
- — ARP
- — BGP group-name

1 —

1.1

IRF

1

	system-view	-
	ip load-sharing local-first enable	

1.2

1.2.1 ip load-sharing local-first enable

ip load-sharing local-first enable

undo ip load-sharing local-first enable

ip load-sharing local-first enable

undo ip load-sharing local-first enable

network-admin

IRF

```
#
<Sysname> system-view
[Sysname] undo ip load-sharing local-first enable
```

2 —

2.1

multiport ARP

2.2

2.2.1 -service-loopback group

service-loopback group *number* **type** { **multicast-tunnel** | **tunnel** } *

service-loopback group *number* **type** { { **tunnel** | **multicast-tunnel** } * | **multiport** }

service-loopback group Multicast tunnel
Tunnel

service-loopback group Multicast tunnel
Tunnel **multiport**
ARP

3 — ARP

3.1

ARP multiport ARP
MAC

3.2

4 — BGP group-name

4.1

display bgp peer BGP *group-name* **group-name** **display bgp group** BGP *group-name* **group-name**

4.2

4.2.1 -display bgp peer

display bgp peer ipv4 [**unicast**] [**vpn-instance** *vpn-instance-name*] [*ip-address mask-length* | { *ip-address* | *group-name* } **log-info** | [[*ip-address*] **verbose**] [**standby slot** *slot-number*]]

display bgp peer ipv6 [**unicast**] [**vpn-instance** *vpn-instance-name*] [*ipv6-address prefix-length* | { *ipv6-address* | *group-name* } **log-info** | [[*ipv6-address*] **verbose**] [**standby slot** *slot-number*]]

display bgp peer vpnv4 [**vpn-instance** *vpn-instance-name*] [*ip-address mask-length* | { *ip-address* | *group-name* } **log-info** | [[*ip-address*] **verbose**] [**standby slot** *slot-number*]]

display bgp peer { **l2vpn** | **vpnv6** } [*ip-address mask-length* | { *ip-address* | *group-name* } **log-info** | [[*ip-address*] **verbose**] [**standby slot** *slot-number*]]

display bgp peer ipv4 [**unicast**] [**vpn-instance** *vpn-instance-name*] [*ip-address mask-length* | { *ip-address* | **group-name** *group-name* } **log-info** | [[*ip-address*] **verbose**] [**standby slot** *slot-number*]]

display bgp peer ipv6 [**unicast**] [**vpn-instance** *vpn-instance-name*] [*ipv6-address prefix-length* | { *ipv6-address* | **group-name** *group-name* } **log-info** | [[*ipv6-address*] **verbose**] [**standby slot** *slot-number*]]

display bgp peer vpnv4 [**vpn-instance** *vpn-instance-name*] [*ip-address mask-length* | { *ip-address* | **group-name** *group-name* } **log-info** | [[*ip-address*] **verbose**] [**standby slot** *slot-number*]]

display bgp peer { **l2vpn** | **vpnv6** } [*ip-address mask-length* | { *ip-address* | **group-name** *group-name* } **log-info** | [[*ip-address*] **verbose**] [**standby slot** *slot-number*]]

display bgp peer BGP
group-name **group-name**

4.2.2 -display bgp group

display bgp group { **ipv4** | **ipv6** } [**unicast**] [**vpn-instance** *vpn-instance-name*] [*group-name*]
display bgp group vpnv4 [**vpn-instance** *vpn-instance-name*] [*group-name*]
display bgp group { **l2vpn** | **vpnv6** } [*group-name*]

display bgp group { **ipv4** | **ipv6** } [**unicast**] [**vpn-instance** *vpn-instance-name*] [**group-name** *group-name*]
display bgp group vpnv4 [**vpn-instance** *vpn-instance-name*] [**group-name** *group-name*]
display bgp group { **l2vpn** | **vpnv6** } [**group-name** *group-name*]

display bgp group BGP *group-name*
group-name

5

5.1

ip load-sharing mode per-flow **algorithm** *algorithm-number*

5.2

5.2.1 -ip load-sharing mode per-flow

ip load-sharing mode per-flow [**algorithm** *algorithm-number* | [**dest-ip** | **dest-port** | **ingress-port** | **ip-pro** | **src-ip** | **src-port**] *] [**slot** *slot-number*]

algorithm-number 0 1
algorithm-number 0 8

ESS 1105