G Series
Single Channel Isolator

Nanjing New Power Electric Co., Ltd.

➔ Introductions

This isolator converts the current or voltage signals into current or voltage signals. The input, output, and power supply are galvanically isolated from each other. It also provides transmitters with power in the field area.Current input isolator allows transmission of HART communication signals.

The main advantages of the isolator are fast response, low dissipation and temperature stability. It can be interfaced with all kinds of device, such as DCS, PLC and other systems.

➔ Parameters

Power supply:

Connection type: Terminals (9+, 10-)

Rated voltage: 18 V DC ~ 32 V DC (Recommended voltage: 24 V DC)

Input (1, 2, 3):

Current: 0(4) ~ 20 mA; 0 ~ 10 mA

Voltage: 0(1) ~ 5 V; 0 ~ 10 V

Input resistance:

Current: approx. 50 Ω

Voltage: ≥ 1 MΩ

Available voltage:

open-circuit voltage ≤ 26 V, voltage ≥ 22 V at 20 mA

Output (5, 6; 7, 8):

Sink mode: 4 ~ 20 mA

Current: 0(4) ~ 20 mA; 0 ~ 10 mA

Voltage: 0(1) ~ 5 V; 0 ~ 10 V

Load resistance:

Sink mode: $R_L \le [(U-3)/0.02]$ Ω; U: Loop power supply

0(4) ~ 20 mA: ≤ 550 Ω; 0 ~ 10 mA: ≤ 1.1 kΩ

0(1) ~ 5 V: ≥ 1 MΩ; 0 ~ 10 V: ≥ 2 MΩ

Transmission characteristics:

Accuracy: ± 0.1% F.S (25 ℃ ± 2 ℃)

Response time: ≤ 2 ms

Temperature drift: 40 ppm/℃

Electromagnetic compatibility: Accordance to IEC 61326-3-1

Dielectric strength (1 mA leakage current, 1 minute test time):

≥ 1500 V AC(Input /Output/Power supply)

Insulation resistance: ≥ 100 MΩ (Input /Output/Power supply)

Ambient conditions:

Operation temperature: −20 ℃ ~ +60 ℃

Relative humidity: 10% RH ~ 90% RH (40 ℃)

Atmosphere pressure: 80 kPa ~ 106 kPa

Storage temperature: −40 ℃ ~ +80 ℃

Power dissipation:

1.3 W (24 V DC, single output)

1.8 W (24 V DC, double output)

➔ Model rules

NPGL-GM [X] [X] [X] D

- The second output signal [note] (Default: null)
- The first output signal [note]
- The input signal [note]

NOTE : Input/Output signal

Number	Input/Output signal
1	4 mA ~ 20 mA
2	1 V ~ 5 V
3	0 mA ~ 10 mA
4	0 V ~ 5 V
5	0 V ~ 10 V
6	0 mA ~ 20 mA
1S	Output sink mode: 4 mA ~ 20 mA
X	User customized signal type

- When the current input signal is 4 ~ 20 mA, the output signal only can select 4 ~ 20 mA or 1 ~ 5 V or sink mode 4 ~ 20 mA.
- When the current input signal is 0 ~ 20 mA or 0 ~ 10 mA, the output signal only can select 0 ~ 20 mA or 0 ~ 10 V or 0 ~ 5 V or 0 ~ 10 mA.
- When the current input signal is 1 ~ 5 V, the output signal only can select 4 ~ 20 mA or 1 ~ 5 V.
- Before purchasing products, please contact us to confirm the selection.

➔ Wiring diagram

Single current input, single current/voltage output

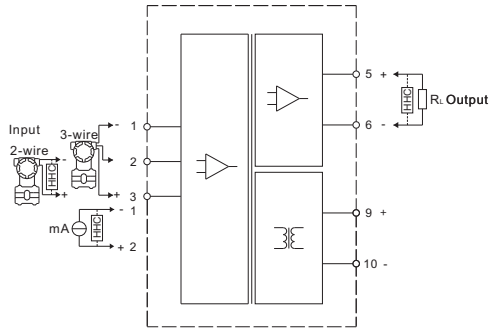

Single current input, double current/voltage output

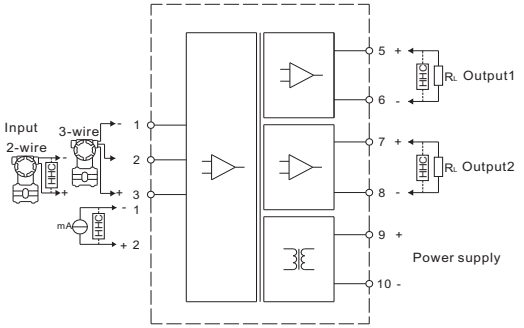

Single current input, single sink mode output

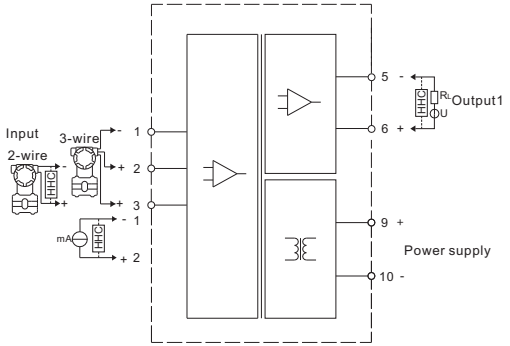

Single current input, double sink mode output

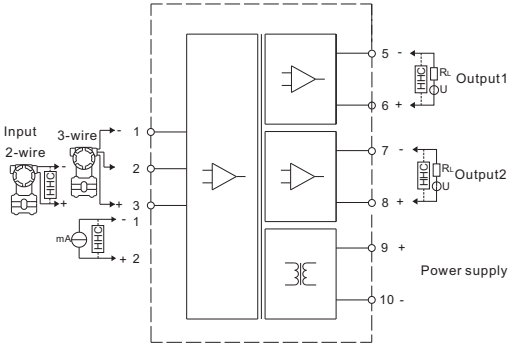

Single voltage input, single current/voltage output

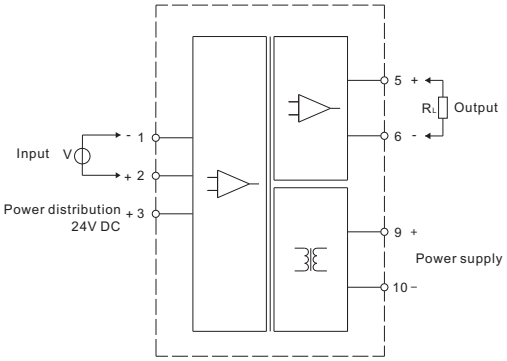

Single voltage input, double current/voltage output

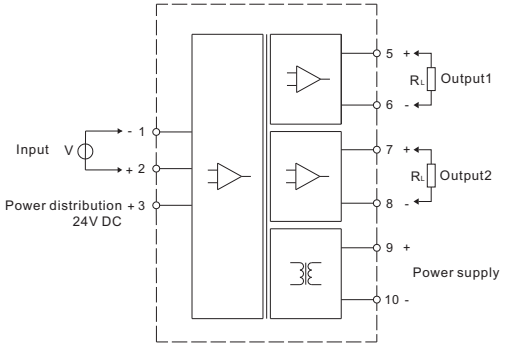

➔ Dimension

Width × Height × Depth: 12.7 mm × 110 mm × 118.9 mm

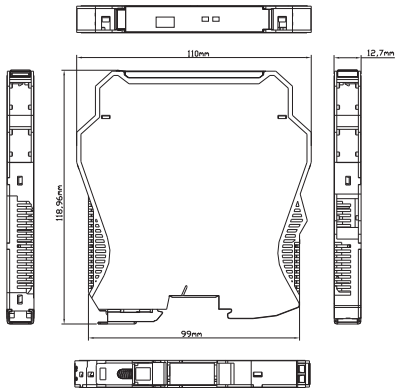

➔ Installation

- ❍ The apparatus can be installed on the DIN 35 mm standard rail which is corresponding to DIN IEC 60715. The must be snapped onto the rail, and never slanted or tipped to the side.
- ❍ Installation and disassembly steps are shown in following figures:

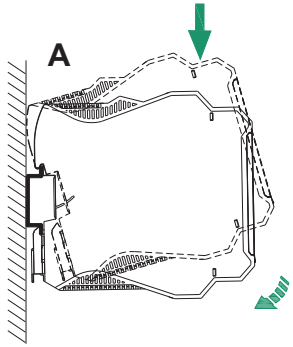

A. Snap metal lock onto mounting rail, then rotate the devices, as figure A, press down the devices onto mounting rail.

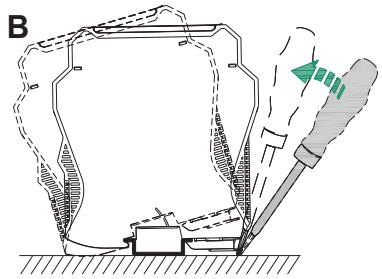

B. Pry the metal lock off the rail with screwdriver as arrow shown, pull downward the springs, and rotate the devices.

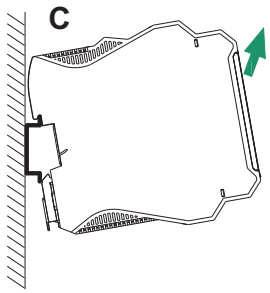

C. Remove the devices as arrow shows.

- ❍ As far as possible to mount it vertically, In order to dissipation the heat of the apparatus.

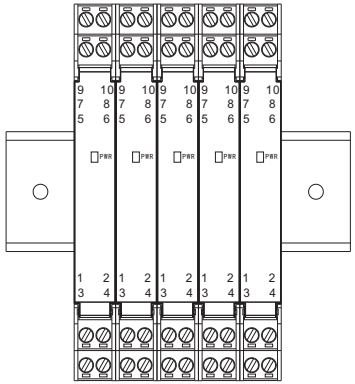

Vertically installation

➔ Light indication

- ❍ **PWR**: Power indicator light shows green, it means work normally.

➔ Attention

- ❍ This devices degree of protection is IP 20 and must be protected from undesirable ambient conditions (waterproofing, small foreign objects). It is suitable for installation in the control room or high density field cabinet, DIN 35 mm installation is convenient for installation and displacement.
- ❍ The devices were designed for use in pollution degree 2 and overvoltage category III as per IEC/EN 60664-1. If used in areas with higher pollution degree, the devices need to be protected accordingly.
- ❍ Installation position shall not be affected by strong mechanical vibration; impact and electromagnetic induction from signal terminal and power supply, should conformity with the requirements on electromagnetic interference resistance of products in Class 3 industrial field atmosphere stipulated in IEC 61000-4; the atmosphere shall be free from gases that are corrosive to metal and plastic components.
- ❍ The apparatus must be installed, connected and adjusted by qualified personnel in non-hazardous area according with the instruction manual.
- ❍ The operator must strictly comply with the relevant local safety standards and guidelines.

➔ Supplementary instructions

- ❍ Our company reserves the right to change the product information without prior notification to the user. If the contents of the description are different from website or sample, this description shall prevail.