BASR

Versatile BACnet/IP Controller/Gateway

BASremote

INSTALLATION GUIDE

(Version 3.5.x and higher)

ATTENTION: The BASremote User Manual can be downloaded at https://www.ccontrols.com/pdf/TD0403000M3.pdf

INTRODUCTION

The BASremote series provide the system integrator a flexible building block when integrating diverse building automation protocols or when expanding the number of points in a building automation system. By supporting open system protocols such as BACnet®, Modbus and Sedona Framework™ SOX, the BASremote series is easily adaptable. For small systems, it can operate stand-alone. For larger systems, it can communicate to supervisory controllers over Ethernet. Depending upon the model, the BASremote has the flexibility to provide the following:

Versatile Control Device — remote I/O, router, gateway and controller

- Web-page configuration
- BACnet/IP Remote I/O
- Modbus TCP Remote I/O
- Modbus Serial to Modbus TCP Router
- Modbus Serial to BACnet/IP Gateway
- Modbus Master to Attached Modbus Slaves
- Powered by Sedona Framework™ Controller
- Power over Ethernet (PoE)
- Customisable web pages

Flexible Input/Output — expandable by adding modules

- Six universal input/output points web-page configurable
- Two relay outputs
- Thermistors, voltage, current, contact closure and pulse inputs
- Voltage, current and relay outputs
- 2-wire Modbus Serial Expansion port
- 2-wire expansion port for up to three expansion I/O modules

The BASremote Master provides the ultimate in flexibility. It can be used for expansion I/O at remote locations where an Ethernet connection exists. Its built-in router and gateway capabilities address unique integration needs where more than one communications protocol is involved. It can operate as a function block programmable controller with its resident Sedona Framework Virtual Machine. Powered by a Linux engine, the BASremote Master can operate as BACnet/IP and Modbus TCP remote I/O, Sedona Framework controller, Modbus Serial to Modbus TCP router, Modbus Serial to BACnet gateway, and Modbus master to attached Modbus slaves all at the same time. A 10/100 Mbps Ethernet port allows connection to IP networks and popular building automation protocols such as Modbus TCP, BACnet/IP, and Sedona SOX. Six universal I/O points and two relay outputs can be configured through resident web pages using a standard web browser and without the need of a special programming tool. A 2-wire Modbus serial port can greatly expand the I/O count with built-in routing to Modbus TCP clients. If BACnet mapping is preferred, the unit incorporates a Modbus serial to BACnet/IP gateway. The BASremote Master also allows you to install custom web pages so you can view the status of your system in a convenient manner.

Additional universal I/O can be achieved with the simple addition of BASremote Expansion modules. The BASremote PoE has the same capabilities as the BASremote Master except it is powered over the Ethernet connection thereby providing a “One Cable Solution”.

The Sedona application can send emails when a specific event occurs in the Sedona application. These contain text to describe alarms and component input values. Different emails can be sent to different email addresses.

The BASremote Master firmware can be upgraded via a webpage screen. Use the browse button to select the firmware file supplied by Contemporary Controls to upload, and then press *Upload*.

TRADEMARKS

Contemporary Controls, ARC Control, ARC DETECT, BASautomation, EXTEND-A-BUS, RapidRing, and CTRLink are trademarks or registered trademarks of Contemporary Control Systems, Inc. Specifications are subject to change without notice. Other product names may be trademarks or registered trademarks of their respective companies. BACnet is a registered trademark of the American Society of Heating, Refrigeration, and Air-Conditioning Engineers, Inc. (ASHRAE).

COPYRIGHT

© Copyright 2016 by Contemporary Control Systems, Inc. All rights reserved. No part of this publication may be reproduced, transmitted, transcribed, stored in a retrieval system, or translated into any language or computer language, in any form or by any means, electronic, mechanical, magnetic, optical, chemical, manual, or otherwise, without the prior written permission of:

Contemporary Control Systems, Inc.
2431 Curtiss Street
Downers Grove, Illinois 60515 USA
Tel: 1-630-963-7070
Fax: 1-630-963-0109
E-mail: info@ccontrols.com
Web: www.ccontrols.com

Contemporary Controls Ltd
14 Bow Court
Fletchworth Gate, CV5 6SP, UK
Tel: +44 (0)24 7641 3786
Fax: +44 (0)24 7641 3923
E-mail: info@ccontrols.co.uk
Web: www.ccontrols.co.uk

Contemporary Controls (Suzhou) Co. Ltd
11 Huoju Road, Science & Technology Park
New District, Suzhou, PR China 215009
Tel: +86-512-68095866
Fax: +86-512-68093760
E-mail: info@ccontrols.com.cn
Web: www.ccontrols.com.cn

Contemporary Controls GmbH
Fuggerstraße 1 B
04158 Leipzig, Germany
Tel: +49 0341 520359 0
Fax: +49 0341 520359 16
E-mail: info@ccontrols.de
Web: www.ccontrols.de

DISCLAIMER

Contemporary Control Systems, Inc. reserves the right to make changes in the specifications of the product described within this manual at any time without notice and without obligation of Contemporary Control Systems, Inc. to notify any person of such revision or change.

SPECIFICATIONS

Electrical (± 10%)	BASR-8M/P		BASR-8M		*BASR-8X*	
	DC	**AC**	**DC**	**AC**	***DC***	***AC***
Input voltage:	48 V	N/A	24 V	24 V	*24 V*	*24 V*
Input power:	10 W	N/A	10 W	17 VA	*8 W*	*17 VA*
Input frequency:	N/A	N/A	N/A	47–63 Hz	*N/A*	*47–63 Hz*
(All modules intended for use with Class 2 circuits only.)						
Loop Supply	+24 VDC, 150 mA max				*+24 VDC, 150 mA max*	
Communications						
BACnet/IP or Modbus TCP:	ANSI/IEEE 802.3 10BASE-T/100BASE-TX				*N/A*	
Ethernet Data Rates:	10/100 Mbps				*N/A*	
Modbus Serial:	Modbus Master Serial ASCII or RTU 2-wire, non-isolated EIA-485 2.4, 4.8, 9.6, 19.2, 38.4, 57.6, 115.2 kbps 100 m max segment length				*N/A*	
Expansion Bus:	N/A				*Proprietary protocol* *100 m max segment length*	
Protocol Compliance						
BACnet/IP:	ASHRAE 135-2004, Annex J B-ASC Profile				*N/A*	
Modbus TCP:	Modbus Appl. Protocol Spec. V1.1b Dec. 28, 2006 (modbus.org)				*N/A*	
	Modbus Messaging on TCP/IP Impl. Guide V1.0b Oct. 24, 2006 (modbus.org)					
Modbus Serial:	Modbus over Serial Line Spec. and Implementation Guide V1.02b Dec. 20, 2006 (modbus.org)				*N/A*	

Regulatory Compliance

CE Mark, CFR 47, Part 15 Class A, RoHS, UL 508, C22.2 No. 142-M1987



Environmental

Operating temperature:	0°C to	+60°C	
Storage temperature:	–40°C to	+85°C	
Humidity:	10% to	95%,	non-condensing

Universal I/O (Channels 1–6) — Software configurable

All protected for:	short-circuit and over-voltage up to 24 VAC
Analog inputs:	10 bit resolution, 0–10 V or 0–20 mA (Input impedance 100 kΩ on voltage, 250 Ω on current)
Thermistor support:	10 kΩ Type II or Type III (+40º to +110 ºF / +4.4º to +44ºC)
Digital inputs:	dry contact or pulses to 40 Hz with 50% duty cycle (User scalable, 0–10 VDC or 0–20 mA)
Analog outputs:	12 bit resolution, 0–10 V or 0–20 mA , user scalable (Max load 750 Ω when using current output.)

Digital Outputs (Channels 7 & 8)

Each channel: "Form C" relay (NO and NC) rated 30 VAC/VDC, 2A

LED Indicators

Status:	green/red
Ethernet:	green/yellow
I/O Points:	green/red

Ethernet Pin Assignments (MDI)

1	TD+	*3*	RD+
2	TD–	*6*	RD–

(The pins below are used only on the BASR-8M/P.)

4	+48 VDC	*7*	0 V
5	+48 VDC	*8*	0 V

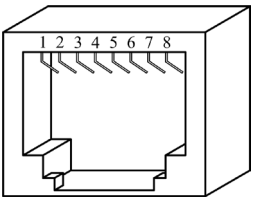

Figure 1 — RJ-45 Jack

Mounting DIN-rail or panel-mount

Shipping Weight 1 lb. (.45 kg)

Product Images (With Panel-Mounting Tabs Removed)

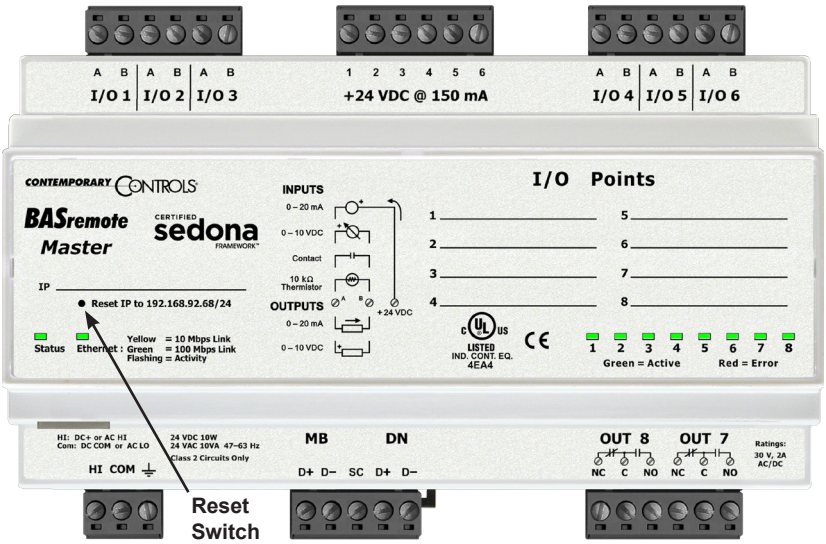

Figure 2 — BASremote Master Image

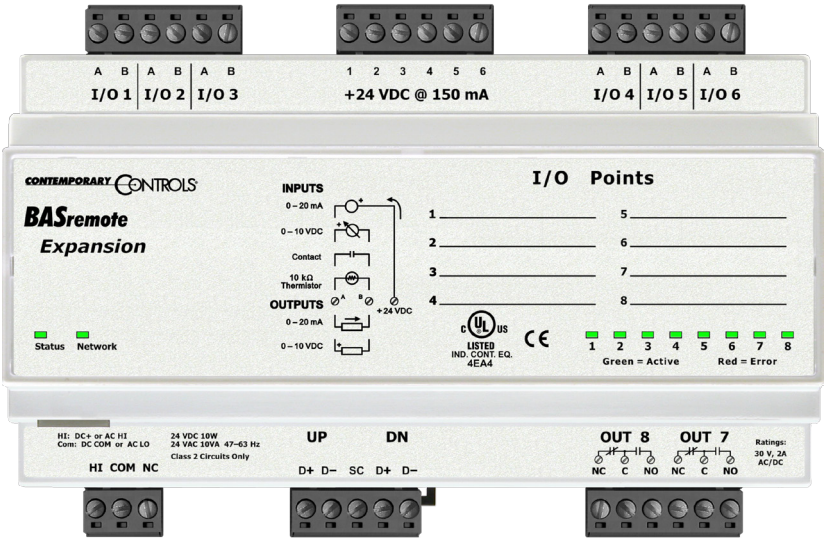

Figure 3 — BASremote Expansion Image

Product Image (With Panel-Mounting Tabs Removed)

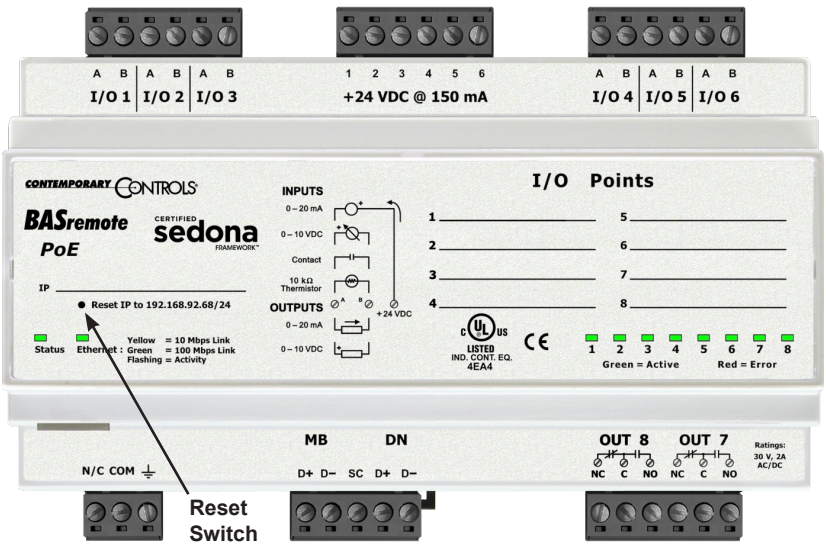

Figure 4 — BASremote PoE Image

Mechanical (With Panel-Mounting Tabs Displayed)

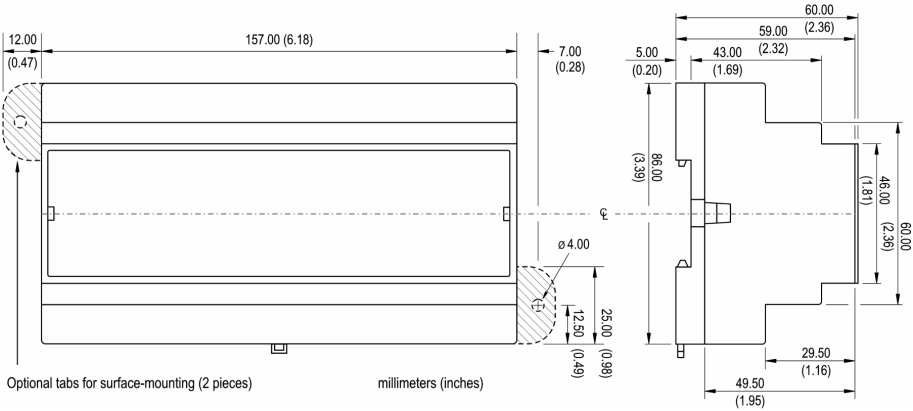

Figure 5 — BASremote Dimensional Drawing for All Models

INSTALLATION

The BASR is intended to be mounted in an industrial enclosure or wiring closet on 35-mm DIN-rail or panel-mounted with screws (not provided). The panel-mounting tabs are packaged in a plastic bag within the shipping box. To use these tabs, Figure 6 illustrates how the two studs of each tab are press fitted into their respective holes in opposing corners of the case. See Figure 5 for the mechanical details.

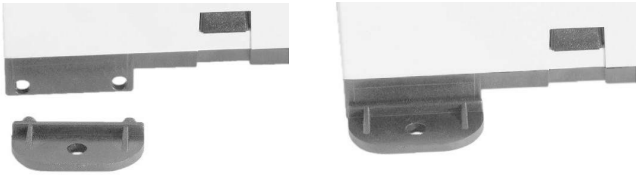

Figure 6 — Attaching Panel-Mounting Tabs

Connecting Expansion Equipment

Input/output points beyond those available from the BASremote Master module can be increased by adding BASremote Expansion modules or by attaching Modbus serial devices to the MB bus. The MB port is used for connecting to 2-wire Modbus serial devices while the DN port is used for connecting to BASremote Expansion modules. Both ports are non-isolated EIA-485 compatible. When installing equipment, make a record that identifies the power source, equipment locations, IP and MAC ID numbers, protocol in use, baud rate, cable colour coding, etc. — anything that will be helpful for future staff.

Expansion Module Connections

Expansion modules are intended to occupy positions to the right or left of the master module on the same DIN-rail or on additional DIN-rails within the same control panel. In this situation only a short 2-wire twisted-pair cable is needed for making connections between DN on the master module and UP on the first expansion module. Up to three expansion modules can attach to the master module using a daisy-chain wiring scheme. The second expansion module has its UP port connected to the preceding expansion module's DN port. The last expansion module will have a vacant UP port. The D+ terminal on one device must attach to the D+ terminal on the other. The same applies to the D– terminals. Bias and termination exists on the UP terminals. See Figure 9 for wiring details. For short connections, unshielded cable can be used. Expansion modules are automatically assigned Modbus addresses beginning with 2 based upon its position to the master within the daisy-chain wiring.

The Modbus serial expansion port (MB) on the BASremote Master module is non-isolated EIA-485 compatible. When connecting to other non-isolated devices, care must be exercised to ensure that all non-isolated Modbus devices share the same ground reference (COM) with the BASremote Master module. This is usually accomplished by sharing the same power source. Configure the Modbus baudrate and protocol using the BASremote Modbus port web page.

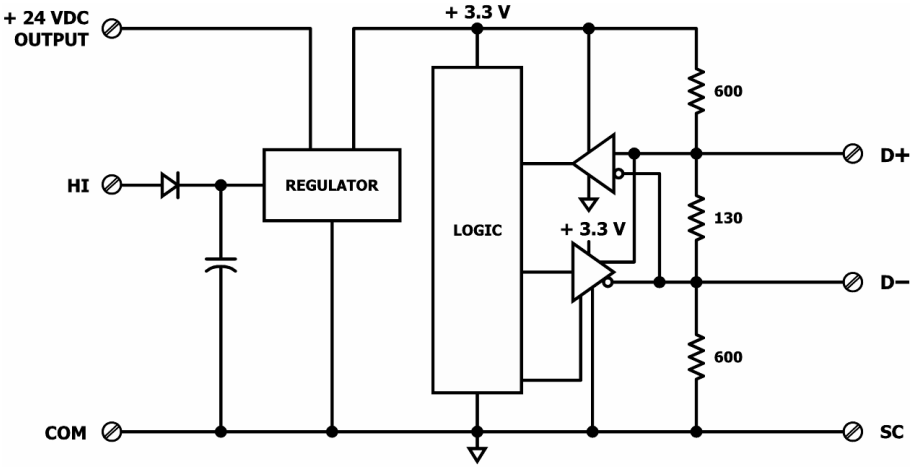

Figure 7 — Internal Termination and Bias

When connecting to an isolated 3-wire Modbus device, the signal common of the isolated device must be connected to the SC pin between the MB and DN ports. This ties the two reference points together for reliable communications. Refer to Figure 9 for wiring details.

Modbus serial devices can only be attached to the MB port on the master module. Refer to Figure 7 for details on the bias and termination network present on the MB port. Together, these resistors approximate one 120 Ω terminating resistor. Terminal D+ represents the more positive connection for the EIA-485 Modbus serial network while D– represents the less positive connection. Make corresponding connections to Modbus serial devices. The last device on the bus should have applied bias and termination or just termination. A shielded twisted-pair cable should be used with inter-connecting devices. Connect the shields together and attached to chassis at only one point. Refer to Figure 9 for wiring details.

Cabling Considerations

When attaching cables to the BASR, Table 1 should be considered.

Function	Signalling & Data Rate	Minimum Required Cable	Maximum Segment Distance
Ethernet	10BASE-T 10 Mbps	Category 3 UTP	100 m (328 ft)
Ethernet	100BASE-TX 100 Mbps	Category 5 UTP	100 m (328 ft)
I/O	Unspecified	18 AWG	Unspecified
Expansion	Unspecified	Belden® 9841 or equivalent	100 m (328 ft)
Modbus	2.4–115.2 kbps	Belden® 9841, 3106A, 9842	100 m (328 ft)

Table 1 — Cabling Considerations

NOTE: If using shielded cable, connect to chassis at only one point. Wire size may be dictated by electrical codes for the area where the equipment is being installed. Consult local regulations.

Observe in Table 1 that 10BASE-T segments can successfully use Category 3, 4 or 5 cable — however, 100BASE-TX segments ***must*** use Category 5 cable. Category 5e cable is highly recommended as the minimum for new installations.

The Ethernet port of the BASR employs Auto-MDIX technology so that either straight-through or crossover cables can be used to connect to the network.

Reset Switch

To reset the Master module to its default values of the IP address (192.168.92.68), gateway address (192.168.92.1) and netmask (/24 or 255.255.255.0), use a paperclip or similar tool to press the reset switch (see ***Figure 2*** for location) while the unit is repowered and until the reboot is complete. Once the Status LED stops flashing, release the reset switch. The unit will now use the default values.

Authentication

If prompted for a user ID and password (each at least 5 alphanumeric characters) when first accessing the BASremote webpage, the default user ID and password are *admin* / *admin*. The default Sedona user ID and password were *admin* / *blank* **before** firmware 3.7.0 — but *admin* / *admin* thereafter. Pressing the reset IP address switch restores the webpage authentication to the default values.

Powering

The unit (except for the BASR-8M/P) requires 24 VDC or VAC from a source via a three-pin removable keyed connector. The proper connections for various power options are illustrated below.

NOTE: This device is intended for use with Class 2 circuits only.

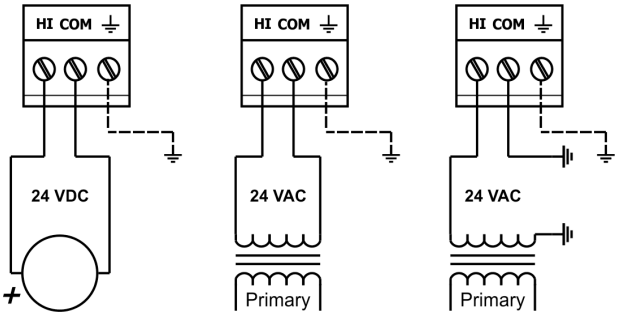

Figure 8 — Power Options

The recommended size for power conductors is 16–18 AWG (solid or stranded). Ground is directly connected to zero volts. Input connections are reverse-polarity protected.

An internal source provides 24 VDC (allowing a maximum current draw of 150 mA) to power external transmitters connected as inputs to the BASR — so a separate loop supply is unneeded.

WARNING: Powering devices can present special hazards. Read the following text carefully.

Power Supply Precautions

Internally, the BASR utilizes a half-wave rectifier and therefore can share the same AC power source with other half-wave rectified devices. Sharing a common DC power source is also possible. Sharing AC power with full-wave rectified devices is NOT recommended. Full-wave rectified devices usually require a dedicated AC power source that has a secondary elevated above ground. Both secondary connections are considered HOT. AC power sources that power several half-wave devices have a common secondary connection called COMMON, LO, or GROUND. This connection might be tied to earth. The other side of the secondary is considered the HOT or HI

side of the connection. Connect the HOT side of the secondary to the *HI* input on the BASR and the LO side to *COM* on the BASR. All other half-wave devices sharing the same AC power source need to follow the same convention. When using a DC power source, connect the positive terminal of the source to the *HI* input and the negative terminal to *COM* on the BASR. Reversing polarity to the BASR will not damage the BASR.

> **WARNING:** Devices powered from a common AC source could be damaged if a mix of half-wave and full-wave rectified devices exist. If you are not sure of the type of rectifier used by another device, do not share the AC source with it.

Limited Power Sources

The BASR should be powered by a limited power source complying with the requirements of the National Electric Code (NEC) article 725 or other international codes meeting the same intent of limiting the amount of power of the source. Under NEC article 725, a Class 2 circuit is that portion of the wiring system between the load side of a Class 2 power source and the connected equipment. For AC or DC voltages up to 30 volts, the power rating of a Class 2 power source is limited to 100 VA. The transformer or power supply complying with the Class 2 rating must carry a corresponding listing from a regulatory agency such as Underwriters Laboratories (UL).

Indicator Lights

Status: During boot-up, this LED flashes green. Once all files are loaded, it glows solid green to indicate the unit is operational. If a problem exists, it will glow solid red.

Ethernet: This LED glows if a valid link exists to an operating Ethernet device. It indicates speed by colour: green for 100 Mbps and yellow for 10 Mbps. It flashes to indicate activity.

I/O: Each of these LEDs glows green when the associated I/O point is in normal condition. Depending on the programmed function, some of these LEDs will glow red to indicate abnormal conditions. Refer to the *User Manual* for a complete explanation of these LEDs.

Field Connections

When attaching devices, observe proper cabling using Figure 9 as a guide.

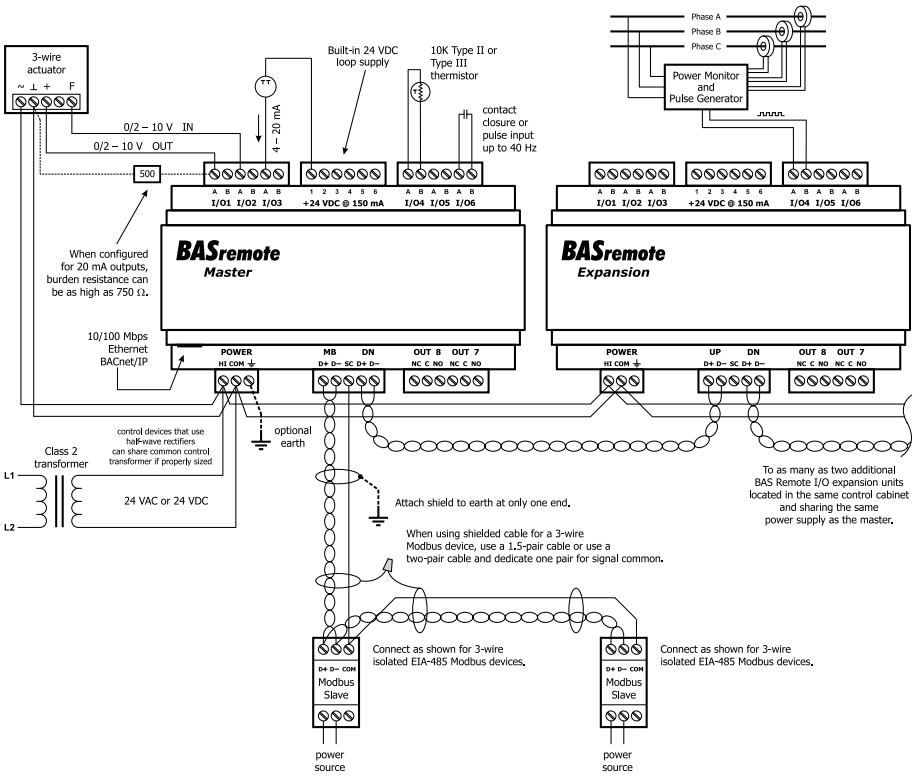

Figure 9 — Sample Wiring Diagram

Wire Channels 1–6 so the most positive wire goes to the "A" terminal and the most negative wire to the "B" terminal.

The wiring options for Channels 1–6 are shown in Figure 10. For each case in which polarity matters, proper polarity is indicated.

Considerations in making field connections for various types of input and output devices are discussed in the following pages.

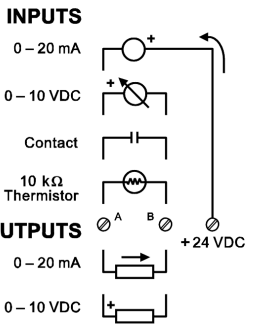

Figure 10 — I/O Options (Channels 1–6)

Thermistors

The BASremote has built-in calibration curves for 10 kΩ Type II or Type III thermistors. These devices are nonlinear with a negative coefficient of resistance to temperature and provide a nominal resistance of 10 kΩ at 25°C. Using the web server, configure an input for either Type II or Type III thermistor. As shown in Figure 11, connect the two-wire thermistor to points A and B. Polarity is not an issue. If averaging of temperature is desired, connect multiple thermistors in a series-parallel combination so that the nominal resistance remains at 10 kΩ as shown. Make sure that all devices are of the same type. The effective range of temperature measurement is from +40° to +110°F (+4.4° to +44°C). An open input results in a fault condition that produces a red LED indication for that channel.

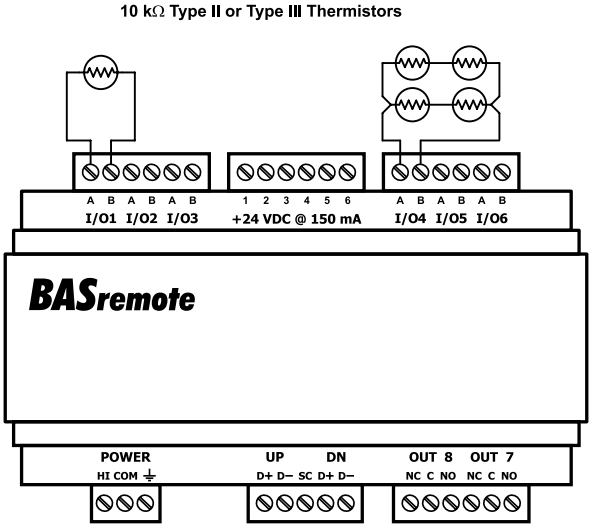

Figure 11 — Thermistor Connections

Contact Closure

The BASremote can sense the make or break of a contact from a relay or push-button. The contacts being sensed must be absent of any applied source of energy, and be rated for low-voltage, low-current switching. The BASremote will provide the electrical energy to be sensed. Using the web server, configure an input for contact closure. As shown in Figure 12, simply connect the contacts between points *A* and *B*. For common mechanical contacts, polarity is not an issue. The open-circuit voltage is 24 VDC and the short-circuit current is 2 mA.

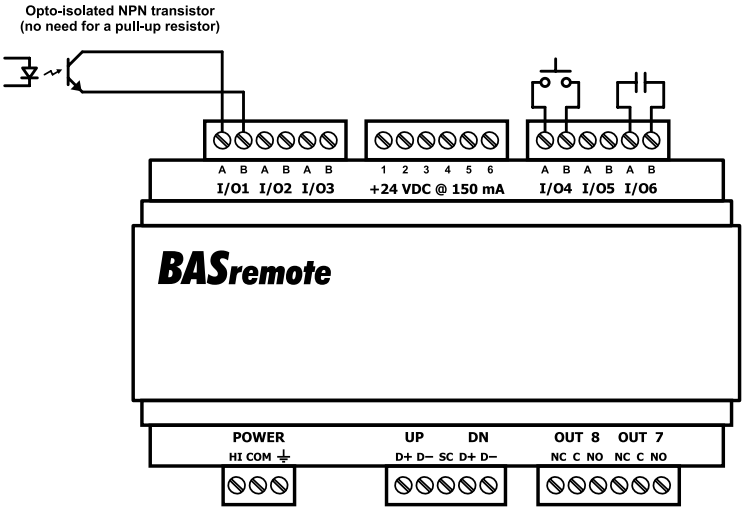

Figure 12 — Contact Closure Connections

For solid-state switches, there are further concerns. It is recommended that a solid-state device have an opto-isolated open-collector NPN transistor output stage with a collector-emitter output voltage (Vce) of at least 30 V. Output sinking current should be greater than 5 mA. The collector-emitter saturation voltage should be less than 0.2 V when sinking 2 mA. The emitter should be connected to point *B* and the collector to point *A* which is the more positive point. This polarity must be observed when using solid-state devices. When an input is configured for a contact closure, the BASremote sets the low threshold to 2 V and the high threshold to 3 V. When a contact is made or the solid-state switch is on (resulting in a saturated output), the voltage at point *A* is close to zero volts. The corresponding LED for that channel will be on. If the contact is opened or the solid-state switch is turned off, the voltage at point B will quickly begin to rise towards 24 V. Once the voltage passes the 3 V high-threshold, the input channel will sense the "off" state. To return to the "on" state, this voltage needs to return to 2 V. The one-volt difference is called *hysteresis*. There is no need to add an external pull-up resistor when using a contact closure input.

Contact closure inputs are sampled every 10 ms and for a change of state to be recognized, the input state must be stable for two consecutive samples. Therefore, contact closure response is from 20–30 ms.

Pulse Inputs

A variation on contact closure inputs is pulse inputs. In this situation speed is critical so the input filtering that limits the time response is removed. When an input is configured for Pulse Input, a pulse rate up to 40 Hz can be measured, assuming a 50% duty cycle. The pulse device could have an opto-isolated open-collector NPN transistor output stage like the one identified under Contact Closure, or it could provide an active sinusoidal output signal that needs to be detected. Data is in the form of *accumulated pulse count*.

The Pulse Input voltage range is 0–10 VDC and the installer can set both the low-threshold and high-threshold on the Pulse Input web page. The difference in the two thresholds is the hysteresis. You can detect *sinusoidal* input signals by setting the high threshold below the positive peak and the low threshold above the negative peak. Setting the two thresholds well toward the centre of the sinusoidal waveform (rather than near its peaks) offers some noise immunity. It is not necessary for the input signal to swing from zero to 10 V. Any substantial swing within this range can be detected. The input impedance using Pulse Input is 100 kΩ. Connect the output of the pulse device to point *A* and the common to BASremote common as shown in Figure 13.

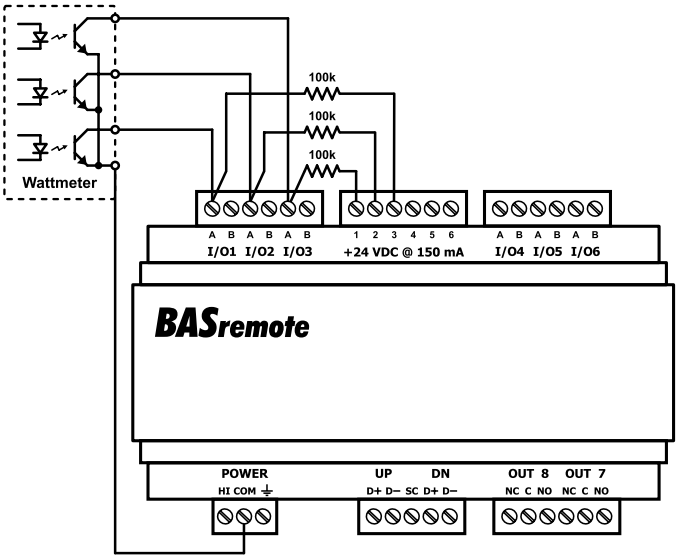

Figure 13 — Pulse Input Connections

The pulse output could be sinusoidal with no DC offset so the BASremote could experience both positive and negative excursions of the signal. The

BASremote can only detect positive voltages so the negative excursions will be ignored. It is still possible to detect the input signal by only sensing the positive excursions.

When interfacing to a pulse device that has an opto-isolated open-collector output, a pull-up resistor must be added to the device output. In Figure 13, a 3-phase wattmeter has three opto-isolated open-collector outputs, each requiring an external pull-up resistor. Since each of the opto-isolators is rated for 60 VDC, install a 100 kΩ pull-up resistor between each output and the +24 V loop supply. The common of the opto-isolators connects to the common of the BASremote. Since each BASremote input has a 100 kΩ input impedance, the resulting voltage divider sets the off-state voltage to 12 V. Even though the BASremote input range is 0–10 VDC, this will not harm it. Set the two thresholds to 2 V and 3 V. The threshold points on digital signals are not critical. Consult the pulse device manual for more guidance.

Analog Input

Either voltage in the range of 0–10 VDC or current in the range of 0–20 mA can be measured with an analog input. Transmitters that produce an elevated "zero" such as 2–10 VDC or 4–20 mA can be measured as well. Using the web page, configure the input for either voltage or current and select an appropriate range. Scaling the input is accomplished by assigning the low and high points to engineering units. When set as a voltage input, the input impedance is 100 kΩ and for a current input, the impedance is 250 Ω.

With voltage measurement, connect the more positive voltage to point *A* and the less positive to BASremote common as shown in Figure 14. On three-wire devices such as damper actuators, the output signal is referenced to the damper's power supply common. That common must be at the same reference as the BASremote common. Notice the connections in the diagram. In this situation it is only necessary to attach the transmitter output to point *A* on the BASremote input.

When measuring current, remember the BASremote sinks current to ground. A 250 Ω impedance is effectively applied between points *A* and *B* on the input. To measure current, it must be driven into point *A* with respect to point *B*. For two-wire current transmitters, the more positive point on the transmitter attaches to the +24 V on the BASremote loop supply or it can attached to an external loop supply as long as that loop supply has a common connection with the BASremote. The less positive connection is made to point *A* on the input.

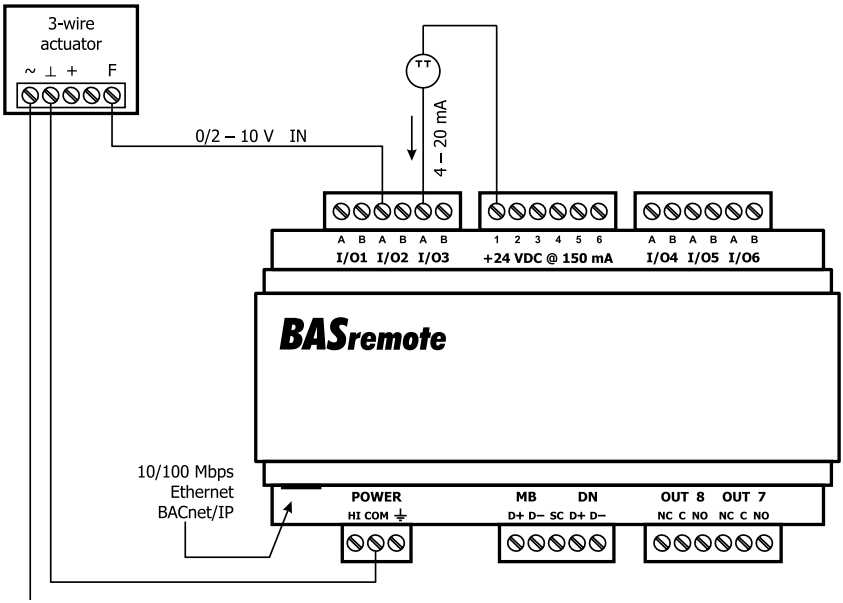

Figure 14 — Analog Input Connections

Care should be exercised when connecting to a three-wire current transmitter. These are usually non-isolated devices between the power source and signal output. The BASremote will sink current from its input to ground so the transmitter ***must*** source current from a positive potential to ground. If the three-wire transmitter works in this manner, it can be accommodated.

Four-wire transmitters usually have isolation between power supply and signal output so their output stage can usually be treated as a two-wire transmitter.

Analog Output

Either voltage in the range of 0–10 VDC or current in the range of 0–20 mA can be outputted by assigning analog outputs. Configure an output using a web page. Select the appropriate range. For DC voltage, the output voltage is applied to point *A* with respect to common. For DC current, the output current is sourced from point *A* to common so there is no need for a loop supply. A current output can source up to 20 mA into a resistive load not exceeding 750 Ω. Verify the burden that a current output device will present. The BASremote cannot generate enough voltage to drive loads with higher resistance.

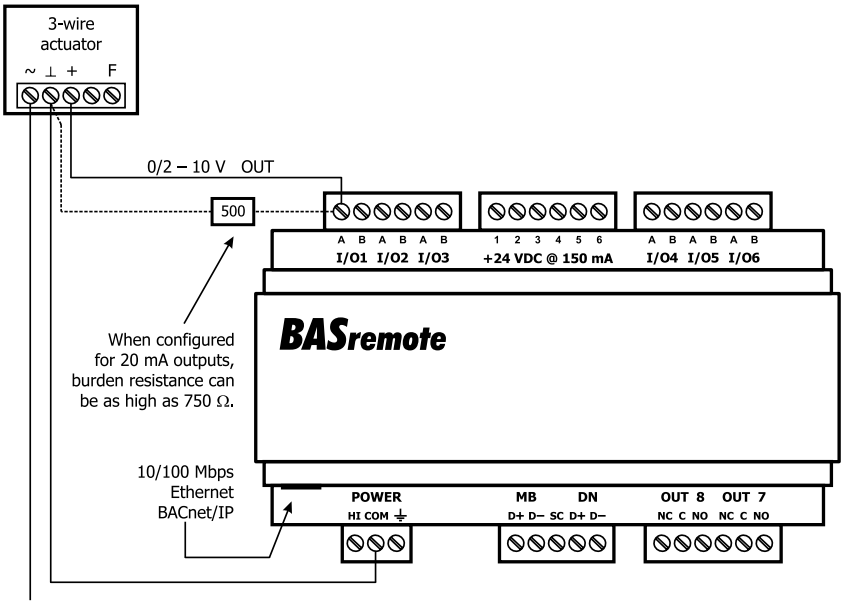

Figure 15 — Analog Output Connections

Figure 15 illustrates connections to a three-wire damper actuator. The damper requires a 0–10 V command signal which can easily be accomplished by the BASremote. To drive a point requiring a 2–10 VDC input signal with a 4–20 mA current source, install an external 500 ohm resistor as shown. Notice that in this case a connection to pin B is not needed.

NEED MORE HELP INSTALLING THIS PRODUCT?

Additional information can be found in the technical documentation available on our web site at www.ccontrols.com. When contacting one of our offices, just ask for Technical Support.

WARRANTY

Contemporary Controls (CC) warrants its new product to the original purchaser for two years from the product shipping date. Product returned to CC for repair is warranted for one year from the date that the repaired product is shipped back to the purchaser or for the remainder of the original warranty period, whichever is longer.

If a CC product fails to operate in compliance with its specification during the warranty period, CC will, at its option, repair or replace the product at no charge. The customer is, however, responsible for shipping the product; CC assumes no responsibility for the product until it is received.

CC's limited warranty covers products only as delivered and does not cover repair of products that have been damaged by abuse, accident, disaster, misuse, or incorrect installation. User modification may void the warranty if the product is damaged by the modification, in which case this warranty does not cover repair or replacement.

This warranty in no way warrants suitability of the product for any specific application. IN NO EVENT WILL CC BE LIABLE FOR ANY DAMAGES INCLUDING LOST PROFITS, LOST SAVINGS, OR OTHER INCIDENTAL OR CONSEQUENTIAL DAMAGES ARISING OUT OF THE USE OR INABILITY TO USE THE PRODUCT EVEN IF CC HAS BEEN ADVISED OF THE POSSIBILITY OF SUCH DAMAGES, OR FOR ANY CLAIM BY ANY PARTY OTHER THAN THE PURCHASER.

THE ABOVE WARRANTY IS IN LIEU OF ANY AND ALL OTHER WARRANTIES, EXPRESSED OR IMPLIED OR STATUTORY, INCLUDING THE WARRANTIES OF MERCHANTABILITY, FITNESS FOR PARTICULAR PURPOSE OR USE, TITLE AND NONINFRINGEMENT.

RETURNING PRODUCTS FOR REPAIR

Return the product by following the instructions at:

https://www.ccontrols.com/rma.htm

DECLARATION OF CONFORMITY

Information about the regulatory compliance of this product can be found at:

https://www.ccontrols.com/basautomation/basremote.php

25 August 2016

[This page is intentionally left blank.]