Planer

Model 10044

Owner's Manual

For Models Manufactured Since 03/2020



175370

Oliver Machinery
1-800-559-5065
921 Thomas Ave SW
Renton, WA 98057

info@olivermachinery.net
WWW.OLIVERMACHINERY.NET

Stock Number: 10044.201B
Manual Version: 1.1.0



READ AND UNDERSTAND ALL INSTRUCTIONS IN THIS MANUAL BEFORE ATTEMPTING TO ASSEMBLE OR OPERATE THE MACHINE.

FOLLOW THE INSTRUCTIONS AND THINK SAFETY!

THE OWNER OF THIS MACHINE IS SOLELY RESPONSIBLE FOR THE SAFETY OF ANYONE USING THIS MACHINE. SUCH RESPONSIBILITY INCLUDES BUT NOT LIMITED TO:

- **PROPER ASSEMBLY, OPERATION, INSPECTION, MAINTENANCE, AND RELOCATION OF THE MACHINE.**
- **PROPER TRAINING FOR THE OPERATORS AND ENSURES THIS MANUAL IS AVAILABLE AT ALL TIMES.**
- **USAGE AUTHORIZATION.**
- **USAGE OF SAFETY AND PROTECTION DEVICE.**

OLIVER MACHINERY DISCLAIMS ANY LIABILITY FOR MACHINES THAT HAVE BEEN ALTERED OR ABUSED. OLIVER MACHINERY RESERVES THE RIGHT TO EFFECT AT ANY TIME, WITHOUT PRIOR NOTICE, THOSE ALTERATIONS TO PARTS, FITTINGS, AND ACCESSORY EQUIPMENT WHICH THEY MAY DEEM NECESSARY FOR ANY REASON WHATSOEVER.

**** SAVE THIS MANUAL FOR FUTURE REFERENCES. ****

PROP 65 NOTICE

WARNING: Drilling, sawing, sanding, or machining wood products can expose you to wood dust, and/or other chemicals that are known to the State of California to cause cancer, birth defects, or other reproductive harm.

Some examples of these chemicals are:

- Lead from lead-based paints.
- Crystalline silica from bricks, cement, and other masonry products.
- Arsenic and chromium from chemically treated lumber.

Avoid inhaling wood dust and other harmful chemicals. Use a dust mask and/or other safety devices for personal protection.
For more information go to http://www.P65Warnings.ca.gov/wood

Table of Contents

Introduction *5*

Specifications *6*

- Quick View 6
- Product Dimensions 6
- Shipment Info 6
- Electricals 6
- Motor 7
- Planer Capacity and Performance 7
- Cutterhead and Carriage 7
- Measurements 7
- Table 8
- Safety 8
- Others 8

Identification *9*

Safety *10*

- General Safety Guidelines 10
- Safety Guidelines Specific to Planer 11

Electricals *13*

- Minimum Circuit Size Required for Model 10044 Planer 13
- Grounding 13
- Indoor Use Only 13
- Electrical Wiring 13

Setup *15*

- Shop Preparation 15
  - Space Requirement 15
  - Electricals 15
  - Lighting 15
  - Safety Labels 15
  - Dust Collection 15
- Receiving 16
  - Unboxing 17
  - Inventory 17
- Waxing 18
- Assembly 18
  - Dust Hood Installation 19
  - Cutterhead Elevation Crank Installation 19
  - DRO Battery Installation 19
- Dust Collection 20
- Bench Mounting (Optional) 20

Controls and Components *21*

- ON / OFF Switches 21
- Overloading Protection Reset Button 21
- Cutterhead Height Adjustment 21
- Carriage Lock 21
- Digital Readout (DRO) 22
- DRO Calibration 22
- Thickness Gauge 22
- Depth Stops 23
- Components for Planing Wood 23
- Test Run 24

Operation *25*

- Step 1: Preparation 25
- Step 2: Setting Depth of Cut 26
- Step 3: Select Feed Direction 27
- Step 4: Planing Wood to Desired Thickness 27
- Common Cutting Problems 29
  - Snipe 29
  - Chipping 29
  - Indentation 29
  - Fuzzy Grain 29

Accessories *30*

- Cutter Inserts 30
- Motor Carbon Brush 30

Maintenance *31*

- Maintenance Schedule 31
- Instructions for Maintenance and Adjustments 32
  - Service Cutterhead and Rotate Cutter Inserts 32

Inspect / Replace Poly V-Belt ·····33
Inspect / Replace Motor Carbon Brushes ·····34
Inspect / Adjust Extension Wing Elevation ·····35
Adjust Cutterhead Height Scale ·····35
Adjust Carriage Elevation Chain Tension ·····36

Troubleshooting ·····37

Wiring Diagram·····40

Parts List ·····41

Carriage and Cutterhead Assembly ·····41

Body and Base Assembly ·····43

Maintenance Record····· 48

Notes····· 49

Warranty and Service····· 50

Appendix ····· 51

US Standard – Metric Conversion Chart·····51

Introduction

Thank you for choosing Oliver! This manual contains important information on how to safely set up, operate, and maintain this machine. Please take the time to read through this manual, and make sure you understand all instructions.

While this manual may provide tips on optimizing the result of your workpiece, the manual is not intended as a substitute for formal woodworking training. If you need to know how to safely complete a woodworking task, please consult knowledgeable and qualified sources before proceeding further.

We made every effort to keep this manual up-to-date. Instructions, specifications, drawings, and photographs in this manual should match the machine delivered. If you find any differences, or anything that seems confusing in this manual, or some instructions are not available, please check our website for an updated version:

WWW.OLIVERMACHINERY.NET/MANUALS

Alternatively, you can contact our technical support for help:

1-800-559-5065

Before calling, please note down the manufacture date and the serial number of the machine. You can find the information on a nameplate located on the back of the motor housing. This information is needed to provide proper technical support, and to determine if an updated manual is available for your machine.



Please let us know how well this manual serves you. If you have any suggestions, please call the number above or email us at:

info@olivermachinery.net

We love to hear from our customers and make improvements.

Specifications

Quick View

Model	10044 Planer
Stock Number	10044.201B
Motor	Universal Motor 2HP, 120V, 1Ph
Max. Stock Width	12-1/2”
Max Depth of Cut	3/64” (Full width) 5/64" (Stock less than 5” wide)
Dimensions	33-3/16”(L) x 23-1/4”(W) x 20-7/16”(H)
Footprint	14-1/4”(L) x 20-1/2”(W)
Fully Assembled Weight	68 lbs.
Warranty	1 Year (Motor and electronics) 2 Years (All other parts)

Product Dimensions

Width x Depth x Height (Fully Assembled)	33-3/16”(L) x 23-1/4”(W) x 20-7/16”(H)
Footprint	14-1/4” (L) x 20-1/2”(W)
Fully Assembled Weight	68 lbs.

Shipment Info

Type	Cardboard Box
Content	Planer with Included Accessories
Dimensions	25-1/4” (L) x 17-3/8”(W) x 21-3/4”(H)
Weight	72 lbs.
Approximate Setup Time	15 minutes
Must Ship Upright	YES
Stackable	YES

Electricals

Power Requirement	120V, 1Ph, 60Hz
Full Load Current Rating	15A
Recommended circuit size	20A
Power Switch Type	Magnetic switch with overload protection.
Connection Type	NEMA 5-15 Plug
Overload Protection	Equipped

Motor

Motor Type	Universal Motor
Horsepower	2HP
Speed	20000 RPM
Efficiency	50%
Power Transfer Mechanism	Poly V-belt and pulleys
Bearing type	Permanently sealed ball bearing

Planer Capacity and Performance

Maximum Stock Width	12-1/2”
Maximum Depth of Cut	5/64" (Stock less than 5” wide) 3/64”(Full Width)
Maximum Stock Thickness	6”
Minimum Stock Thickness	5/32”
Minimum Stock Length	5”
Feed Rate	26 FPM
Number of Cuts Per Square Inch	92

Cutterhead and Carriage

Cutterhead Type	Byrd Shelix® Cutterhead
Cutterhead Diameter	1-7/8”
Cutterhead Speed	10000 RPM
Number of Cutter Inserts	36
Number of Rows of Cutter Inserts	3
Cutter Insert Type	Four-sided, indexable carbide
Cutter Insert Diameters	15mm x 15mm x 2.5mm
Cutter Blade Angle	30 degree
Cutter Insert Screw Tensioning Torque	45 lbs.-inch
Infeed Roller Type	Rubber
Outfeed Roller Type	Rubber
Carriage Height Change Per Revolution of Crank	1/16”
Carriage Lock	Equipped

Measurements

Measurement Units	Inch/mm
Measurement Devices	Wixey Digital Readout
Digital Readout Resolution	1/32”/0.005”/0.1mm
Digital Readout Accuracy	+/- 1/500”/0.0025”/0.05mm
Additional Measurement Device	Carriage height scale Depth Scale Material Removal Gauge

Table

Table Dimensions	33-3/16” x 12-1/2” (With extension wings) 10-5/16” x 12-1/2” (Without extension wings)
Material	Steel

Safety

Number of Dust Ports	1
Dust Port Size	4” (2.5” Adapter Included)
Minimum CFM Required	300 CFM
Sound Rating @ 2’ distance	103 dB

Others

Serial Number Location	On the back of the motor housing
Spare Parts Included	3 Byrd cutter inserts
Certification	CSA 175370
Country of Origin	Taiwan

Identification

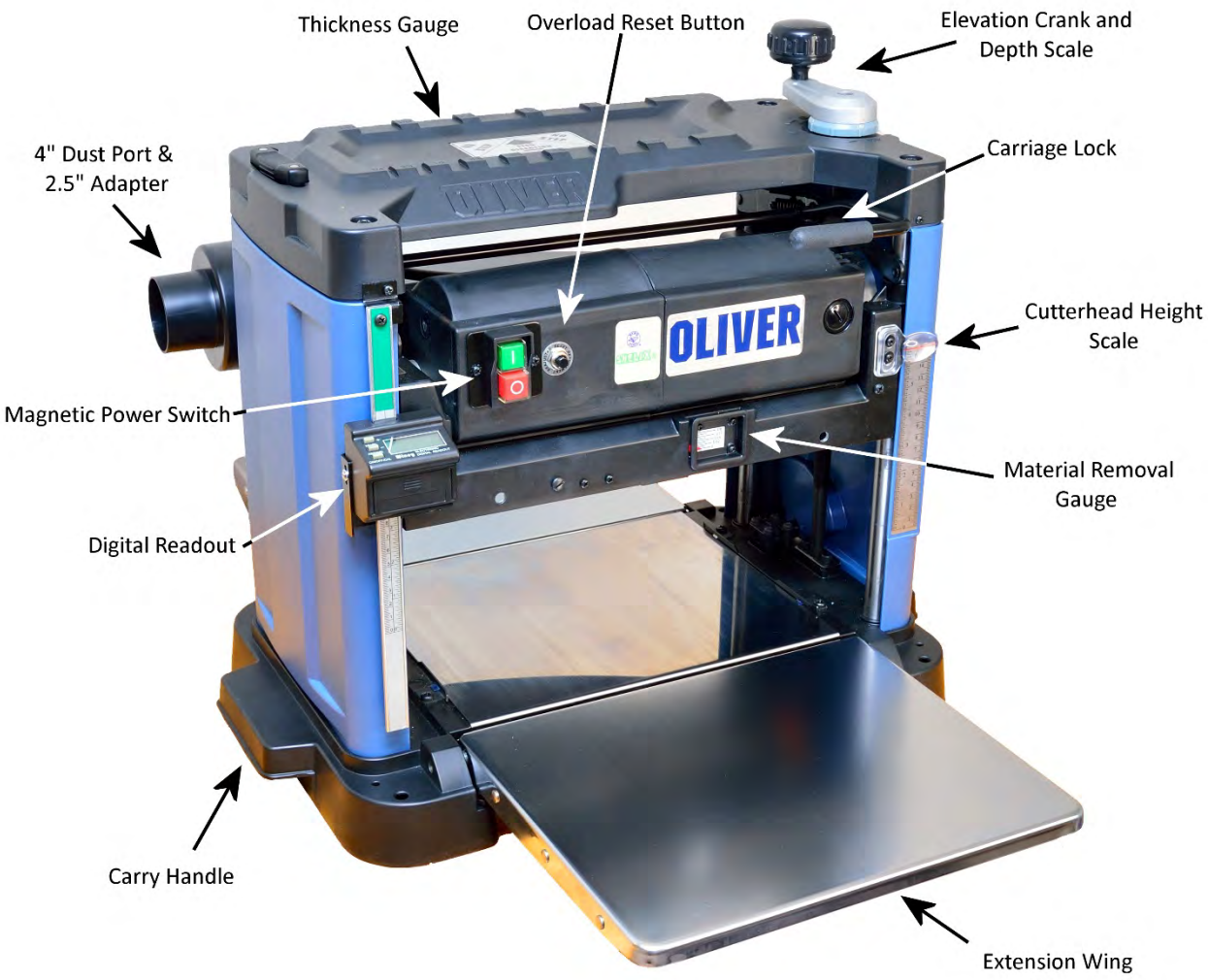

Depth Stops

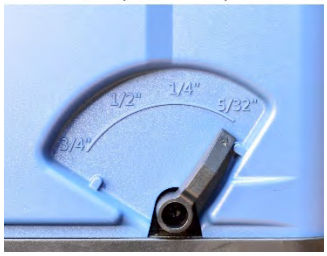

Safety

Oliver Machinery has made every attempt to provide a safe, reliable, easy-to-use piece of machinery. Safety, however, is ultimately depending on the individual machine operator. **Before operating this machine, please become familiar with the following safety labels and guidelines.**

DANGER	This indicates an imminently hazardous situation which, if not avoided, **WILL** cause death or serious injury.
WARNING	This means if the warning is not taken seriously, it **CAN** cause death or serious injury.
CAUTION	This means if the precaution is not taken, it **MAY** cause minor or moderate injury.
IMPORTANT	This is a tip for properly operating the machine to avoid machine damage.

General Safety Guidelines

1. **FAMILIARIZE** yourself with all safety instructions found in this manual. Know the limitations and hazards associated with this machine. Do not operate or service this machine until you are properly trained.

2. **ELECTRICAL GROUNDING**, when done properly, reduce the risk of electrocution, shocks, and fire. Make certain that the machine frame is electrically grounded and that a ground lead is included in the incoming electrical service. In cases where a cord and a plug are used, make certain that the grounding plug connects to a suitable ground. Follow the grounding procedure indicated in the electrical code of your area.

3. **DISCONNECT** the machine from power before performing any service, maintenance, or adjustments. A machine under repair should be RED TAGGED to show it should not be used until the repair is complete.

4. **EYE PROTECTION**: Always wear an approved safety face shield, goggles, or glasses that complies with ANSI Z87.1 and CSA Z94.3 standards. Common eyeglasses are not safety glasses, and may not provide adequate protection.

5. **EAR PROTECTION**: Use hearing protective devices where the noise exceeds the level of exposure allowed in Section 1910.95 of the OSHA Regulations. When in doubt, use it.

6. **OTHER PERSONAL PROTECTION**: Before operating this machine, remove tie, rings, watch, and other jewelry. Roll up sleeves above elbows. Remove all loose outer clothing and confine long hair. Wear professional work boots to protect your feet from injuries and slippage. Do not wear gloves unless it is instructed to perform a particular step(s) in the manual.

7. **GUARDS**: Keep machine guards in place for all applicable operations. If any guards are removed for maintenance, DO NOT OPERATE the machine until all guards are reinstalled.

8. **WORKPLACE SAFETY**: Keep the floor around the machine clean. Scrap material, sawdust, oil, and other liquids increase the risk of tripping or slipping. Be sure to clean up the table before starting the machine. Make certain the work area is well lighted and that a proper exhaust system is used to minimize dust. Use anti-skid floor strips on the floor area where the operator normally stands and mark off the machine work area. Provide adequate workspace around the machine.

9. **ACCESS CONTROL** should be enforced so only trained personnel can access the work area and operate the machine. Use childproof power switch when applicable.

10. **STAY ALERT** at all times. Do not operate this machine while under the influence of drugs/alcohol, or when not feeling well.

11. **NEVER STAND ON MACHINE.**

12. **REPLACEMENT PARTS:** Use only genuine Oliver Machinery replacement parts and accessories recommended for this machine. Generic parts made by other manufacturers may create a safety hazard and WILL void the factory warranty and other guarantees.

13. **PROPER USE:** Do not use this machine for anything other than its intended use. If used for other purposes, Oliver Machinery disclaims any real or implied warranty and holds itself harmless for any injury or damage which may result from that use.

Safety Guidelines Specific to Planer

Before Work Begins:

1. **USE ONLY NATURAL, SOLID WOOD.** Do not plane any material such as plywood, MDF, OSB, laminate, or anything that can disintegrate during operation. Do not plane treated lumber or anything that contains harmful chemicals, as this will spread wood dust that contains such harmful chemicals. Do not attempt to plane any workpiece with loose knots or with any other foreign materials.

2. **CHECK CUTTER INSERTS:** Make sure cutter inserts are sharp, clean, and free from damages. Forcing dull/damaged cutter inserts to work invites accidents and impacts finish quality. Use the recommended amount of torque to securely fasten all inserts onto the cutterhead.

3. **SERVICING CUTTER INSERTS:** Wear heavy-duty leather gloves to protect your hands when installing new cutter inserts or rotating the existing ones. Ensure the cutterhead is thoroughly clean before installing the insert. Debris between the cutter insert and its seat can create uneven pressure, causing the insert to break, and body injuries may occur.

4. **SUPPORT LONG WORKPIECE** with auxiliary stock feeding rollers/tables. This will help to avoid injuries and improve the quality of the finish. Bolt down machine to prevent tipping.

When Planing:

1. **DUST COLLECTION SYSTEM** is required for this planer. Please make sure the system is on and provide enough suction before starting the planer.

2. **KICKBACK** happens when a workpiece is ejected, usually towards the infeed side of the planer, during operation. **This can cause serious injuries or even death.** The operator should be cautious about possible kickbacks.

    - **ALWAYS** wear proper protection devices and stay away from the line-of-fire to avoid kickback-related accidents.
    - **NEVER** look inside the planer during operation.
    - **NEVER** plane boards that are shorter than 5" as mentioned in the specifications.

3. **PROPER WORKPIECE FEEDING** avoids kickback. Never start the machine with the workpiece engaging the cutterhead. Never start feeding until the planer has reached its full speed. Ensure feed rollers apply an adequate amount of pressure on the workpiece.

    - **NEVER** force a workpiece through the planer. Make adjustments as needed.
    - **ONLY** plane one board at a time.
    - For twisted workpieces, face joint with a jointer before thickness planing.

4. **STUCK WORKPIECE** should be removed only after the planer is powered off, and the cutterhead comes to a complete stop. Do not use hands or push sticks to force-feed a workpiece through the planer, as it can result in severe injuries and/or machine damage.

5. **DEPTH OF CUT SETTINGS:** Do not force the planer to exceed its maximum depth of cut capacity found in the specification. Failing to comply can cause machine damage and injuries. Reduce the depth of cut for hard materials as that increases the planer's workload.

After Operation

1. **STOP THE MACHINE** if the operator leaves the machine for any reason.
2. **WAIT** until the machine comes to a complete stop.
3. **CLEAN UP** work area before departure.

Electricals

WARNING **All electrical work must be done by a qualified electrician and must meet the electrical code in your area.**

Minimum Circuit Size Required for Model 10044 Planer

Stock Number	Minimum Circuit Size Required
10044.201B	20A

Please ensure the electrical circuit for this machine meets the minimum circuit size requirement. The minimum circuit size requirement applies to a dedicated circuit that provides power to one 10044 Planer. If more items are sharing the same circuit, consult a qualified electrician to ensure the designated circuit is properly sized for safe operation.

If a circuit is available, but not meeting the minimum circuit size requirement listed above, a new circuit must be installed for this machine.

Grounding

WARNING **Improper grounding can cause electric shock, fire, and equipment damage.**

Proper grounding reduces the risk to the operator in the event of electrical malfunction or breakdown. This machine must be connected to the grounding conductor when available, and all grounding connections must meet or exceed the electrical code requirements in your area. Furthermore, all grounds must be verified and must meet or exceed the electrical requirement of the machine. If grounding is not available, consider the use of a GFCI protection device as an alternative, if this complies with the electric code in your area.

Indoor Use Only

This machine is designed for indoor use only. Operating this machine outdoor increases its exposure to moisture, which in turn increases the risk of electric shock.

Electrical Wiring

This machine is pre-wired for 120V with a cord and plug. Use of extension cord is not recommended. If you need to use an extension cord to connect to a power source, select a durable cord type with a high-temperature rating (90C° or above). Use the minimum amount of extension cord as needed.

Minimum cord size (AWG) required based on amperage draw and length of the cord:

Amps	**Power Cord Length**				
	25 feet	50 feet	75 feet	100 feet	> 100 feet
< 5	16	14	14	14	NR
5 to 8	14	14	14	12	
8 to 12	14	14	12	10	
12 to 15	12	12	10	10	
15 to 20	10	10	10	NR	
21 to 30	10	NR	NR	NR	

*NR: Not Recommended

WARNING **Use properly sized wires that meet or exceed the power requirement of your machine. Using undersized wires may cause overheating and increase the risk of fire and machine damage.**

Setup

Shop Preparation

Space Requirement

The dimensions of this machine are 33-3/16”(L) x 23-1/4”(W). You will need additional spaces for manipulating your workpiece, electrical connection, and dust collection.

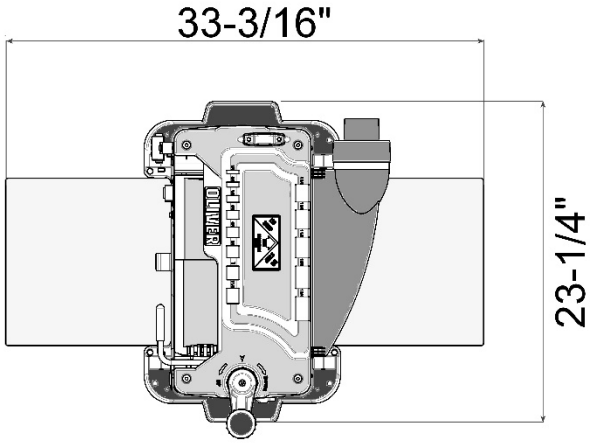

Electricals

If you plan to install this machine in a permanent location, make sure a properly sized circuit and electrical outlet are available nearby. Please refer to section “Electricals” in this manual for details regarding electrical requirements.

Lighting

Adequate lighting is needed for operating this machine. Overhead, non-glare lighting should be installed.

Safety Labels

If this machine introduces a new safety hazard to your workplace, display proper warning signs in a highly visible location(s).

Dust Collection

Wood dust created by this planer is a health hazard. Position this planer in a spot where it has access to a dust collection system.

Dust masks should be available for using the planer.

⚠ **CAUTION**	**Use a dust collection system that is rated above 300 CFM. Doing so improves air quality in the workplace, and prevents the machine from jamming.** **Piping of dust collection system introduces additional air resistance and decreases the effective CFM measured at the dust ports. Ensure there is significant suction at the dust port, so dust and debris can be effectively removed from the machine.**

Receiving

If this planer is delivered to you, please check for any significant damages on the packaging before signing the delivery confirmation.

This machine has a shipping weight of 72 lbs., and a net weight of 68 lbs. Please be sure help is available to move the machine to its final location.



IMPORTANT	If items are damaged, please call us immediately at **1-800-559-5065**

⚠ **WARNING**	**10044 Planer has a gross weight of 72 lbs. and a net weight of 68 lbs.** **Safe moving techniques and proper lifting equipment are required, or serious personal injury may occur.**

⚠ **WARNING**	**Do not lift your shipment by the strap. They are not designed to hold the total weight of your shipment. They may snap without warning and cause serious injury and machine damage.** **Straps may spring back violently when released and cause injury. Always wear safety goggles and gloves when removing straps.**

Unboxing

Inside the box, you should find a planer, a cutterhead elevation crank, and a box that contains all loose parts and accessories.





Inventory

Carefully unwrap the packaging and make sure all components are included in the shipment. Layout all items received and inventory them.

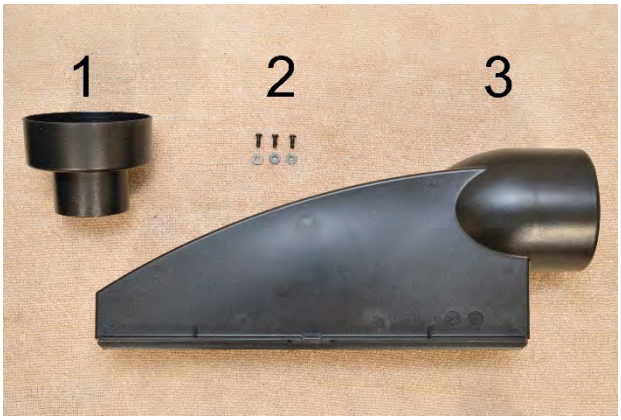

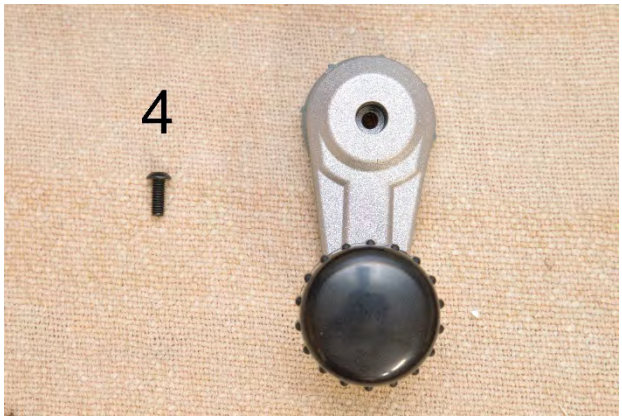

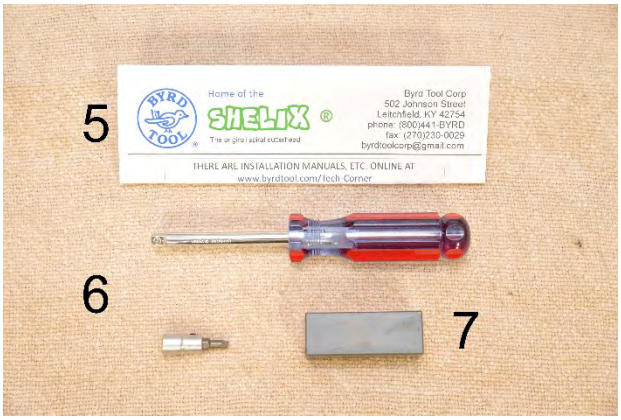



Item	*Description*	*Quantity*
1	2.5” Dust port adapter	1
2	Mounting hardware for dust hood • Screw • Washer	3 each
3	Dust hood with 4” dust port	1
4	Cutterhead elevation crank and mounting screw	1 each
5	Cutter insert installation instructions from Byrd Tool	1
6	1/4" Spinner handle and T25 Torx bit socket (1/4 in. Drive)	1 each
7	Spare Byrd cutter inserts	3
8	AAA battery for digital readout	2

NOTICE: If you cannot find an item in the list above, please check if it is still attached to the packaging. Occasionally the item may have been pre-installed in the factory. See section “**Parts List**” to check if a component is included or installed.

NOTICE: This machine comes with various standard sized, non-proprietary parts. If any of these parts are missing, we are happy to deliver them to you. To have the machine up and running as soon as possible, you can also find these parts at your local hardware store.

Additional Items Recommended for Machine Assembly

Item	**Purpose**
Safety Glasses	Protection
Disposable Gloves	Protection
Straight edge	Check alignments.
¼” Drive Torque Wrench	Cutter inserts installation and for checking Torx screw tension (45 lbs.-inch).

Waxing

The surfaces of the steel planer bed and extension wings have a low resistance finish. To minimize stock feeding resistance, it is recommended to wax these surfaces with paste wax before first use, and routinely thereafter.

Assembly

This planer is mostly assembled in the factory. There are a few more items to set up before the machine is ready for a test run:

1. Install the dust hood.
2. Install the cutterhead elevation crank.
3. Install the DRO battery.
4. Connect the planer to a dust collection system.

The approximate time for cleaning and assembly is approximately 15 minutes.

Dust Hood Installation

1. Remove cardboard packaging that supports dust hood during shipment.



2. Attach dust hood onto the cutterhead cover plate.



3. Use the provided mounting screws and washers to secure the dust hood at the bottom and on each side.

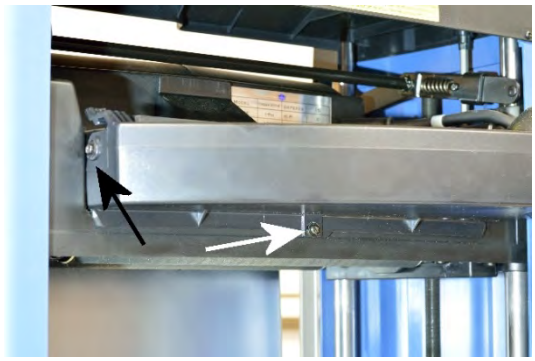

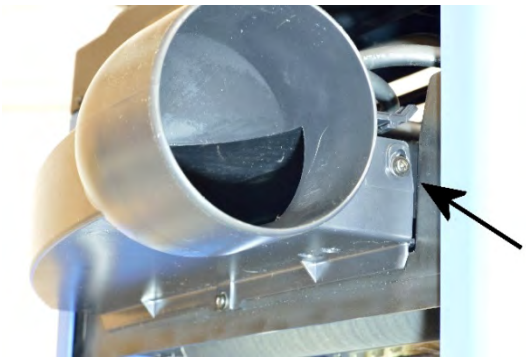

Cutterhead Elevation Crank Installation

1. Install the crank. Make sure flat surfaces on the crank and the shaft are aligned.

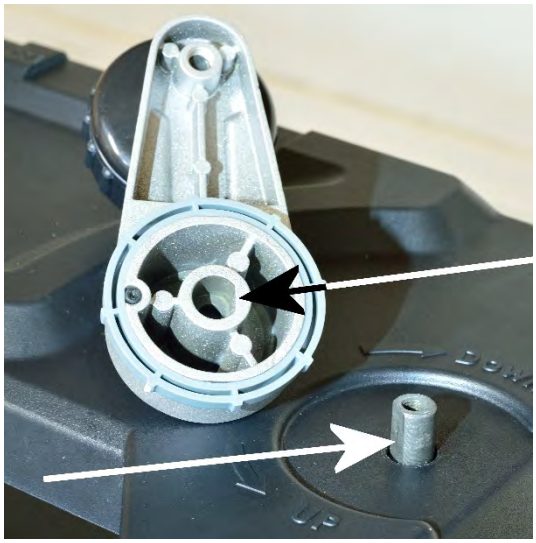

2. Secure the crank with a T-30 Torx screw that comes with the package. A T-30 Torx wrench can be pulled out from the top panel for this task.



DRO Battery Installation

1. Remove the battery cover and install two AAA sized batteries. Reinstall the cover when done.



Dust Collection

This wood planer can generate a lot of wood shavings and dust. Although this planer is equipped with an internal dust blower, it is still a good idea to connect this planer to a dust collection system, so all dust and wood chips can be effectively removed and contained.

The minimum CFM requirement for this planer is 300 CFM at the dust port, which means your dust collection system should have a rating greater than 300 CFM, as air friction and leakage reduce effective CFM at the dust port.

This planer comes with a 2-1/2” dust port adapter which is compatible with a standard-sized vacuum hose. It is possible to connect this planer to a vacuum with good suction for light-duty tasks.

IMPORTANT	**Running this planer without a dust collection system, or using a dust collection system with inadequate suction, may cause dust and shavings to accumulate inside the planer. This can damage the machine and cause other hazardous situations. Check your dust collection system regularly to make sure it is not jammed or filled up.** **When using this planer without a dust collection system, make sure wood chips are not getting accumulated inside the machine. Clean planer frequently.**

Bench Mounting (Optional)

Mounting this planer on a stable surface prevents it from tipping when planing long stock. The diagram below has the measurements of the planer base and the mounting holes. Using four 9/16” bolts for mounting provides maximum strength and stability. Alternatively, there is another set of four mounting holes that accept screws up to size #10.

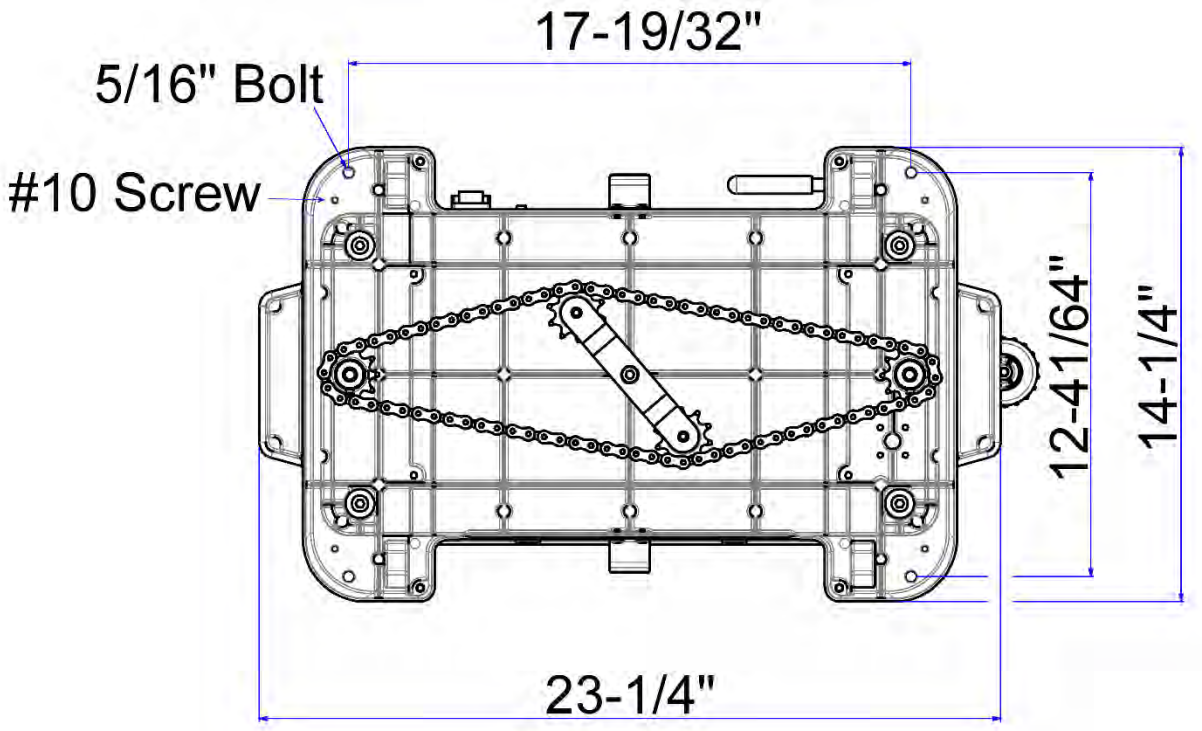

Controls and Components

ON / OFF Switches

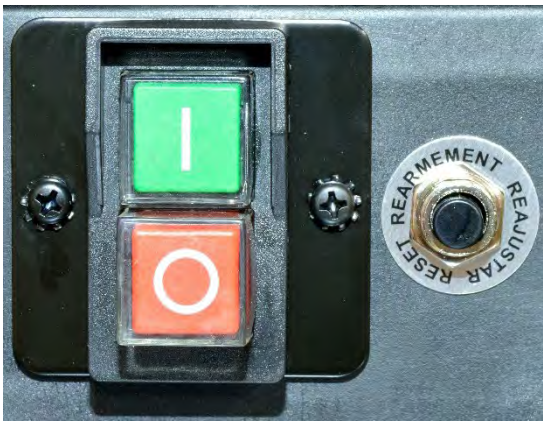

- To start this planer, press the green "**I**" button.
- To stop, press the red "**O**" button.

NOTICE: Magnetic power switch prevents the machine from restarting itself after a power outage. To restart the machine, simply press the start button.

Overloading Protection Reset Button

If the planer is overloaded and stopped, the reset button will pop up. Wait for 3 minutes for the machine to cool down. Reduce workload, then press the reset button before resuming operation.

Cutterhead Height Adjustment



This planer has a cutterhead elevation crank with a depth scale. Each revolution changes the cutterhead's height by 1/16".

- Turn clockwise to **LOWER** cutterhead.
- Turn counterclockwise to **RAISE** cutterhead.

The depth scale turns with the crank and can be rotated individually for measuring fine elevation adjustments. Each notch on the scale represents 1/128" of elevation change.

Carriage Lock

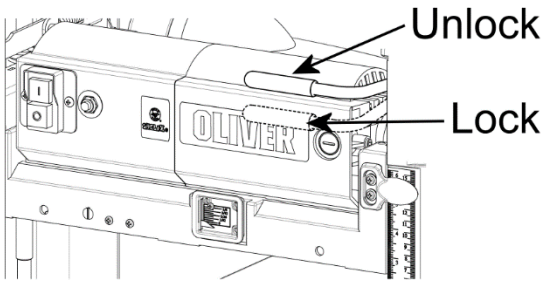

A locking lever is located below the cutterhead elevation crank.

- Lower the lever to **LOCK** carriage height.
- Lift the lever to **UNLOCK**.

Digital Readout (DRO)

This planer is equipped with a Wixey DRO with 0.005” or 1/32” resolution. Fractional inch value will appear if the measurement is a multiple of 1/32.



MM/IN Button
Toggle measuring unit between metric (mm) and US standard (inch).

ABS/INC Button
Toggle between absolute mode and incremental mode.

The absolute mode shows the distance between the table and the cutterhead. Once calibrated, the settings will be memorized unless the battery is exhausted.

The incremental mode shows the distance the cutterhead traveled from the last reset position. The reading can be reset by toggling to absolute mode.

ON/OFF/CAL Button
This is the DRO power switch. Hold the button to calibrate the DRO.

DRO Calibration

You will need a piece of flat scrap wood and a caliper for calibration.

1. Plane down the scrap wood until the entire surface is cut.
2. Using a caliper, measure the thickness of the midsection of the workpiece. Note down the thickness.
3. Turn on the DRO and switch to ABS mode
4. Hold the **ON/OFF/CAL** button for 3-5 seconds. “**ABS**” will be blinking on the display when the DRO enters the calibration mode. The reading of the absolute mode is now reset to zero.
5. To set the reading of ABS mode, press **“+”** (MM/IN button) or **“-“** (ABS/INC button) to enter the measurement taken in step #2. Hold the button to quickly increment/decrement the reading.
6. Press the ON/OFF/CAL button when the value is set. This will exit the calibration mode.
7. Once the DRO is calibrated, the DRO will memorize the value until the battery is exhausted.

Thickness Gauge

The integrated thickness gauge on the top panel shows the approximate thickness of a workpiece. It helps to set the initial cutterhead height for thickness planing.



Depth Stops

Allows quick and repeatable adjustments for thickness planing. Four settings are available: 5/32”, 1/4", 1/2", and 3/4".

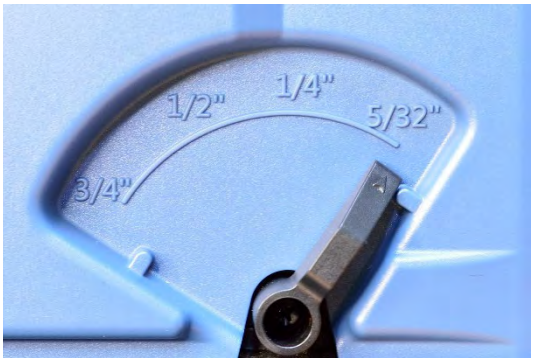

To plane stock to the thickness of the above:

1. Raise carriage as needed.
2. Move the lever to the desired thickness setting.
3. Lower carriage until resistance is felt when turning the elevation crank.

IMPORTANT	**Do not force the carriage to go below the height limited by the depth stop. Permanent planer damage may occur, and workpiece planed may have one side thicker than another.**

Components for Planing Wood

This diagram shows components involved in planing a piece of wood:

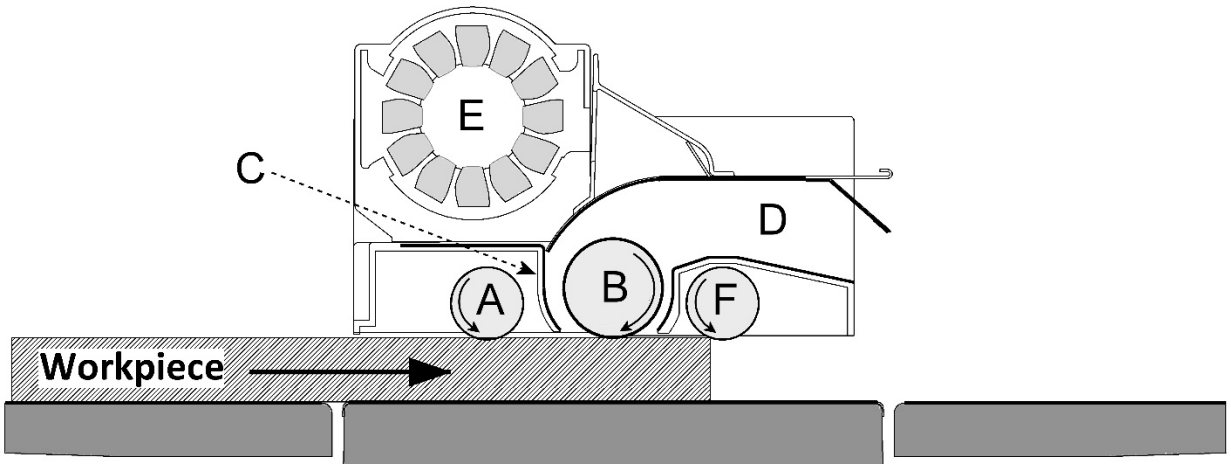

How it works:

1. When the workpiece enters the planer**,** the infeed roller **[A]** pulls the workpiece towards the cutterhead **[B]**.
2. Cutterhead then cuts on the workpiece.
3. Wood chips and dust generated by the cutterhead are collected by the chip breaker **[C]** and diverted towards the dust hood **[D]**. An internal chip blower **[E]** then pushes the debris out of the dust hood.
4. As the workpiece moves past the cutterhead, the outfeed roller **[F]** pulls the workpiece away from the planer.

Test Run

To get familiar with this planer, and to ensure everything is well-calibrated, it's advised to run the following tests before production work.

Step 1: Verify all electrical components are functional.

1. Remove all tools and debris from the planer bed and the extension wings.
2. Press the OFF button.
3. Connect the machine to the power source.
4. Press the ON button. The machine should be running with no excessive noise and vibration.
5. Press the OFF button to stop the machine.
6. Press the ON button to restart the machine. Disconnect the machine from the power source while the machine is running, then reconnect the machine to power. The machine should **NOT** restart.

Step 2: Verify planer is functional and calibrated.

1. Connect planer to a dust collection system.
2. Lower carriage all the way down. It should stop at 5/32" above the planer bed, or the height set by the depth stop.
3. Raise carriage all the way up. It should stop approximately 6" above the planer bed.
4. Turn on the DRO and check its readings. It should reflect the movements of the carriage.
5. Prepare a piece of good quality, straight grain wood board with a flat bottom for a test run. It is advised to choose a board that is close to 12-1/2" wide and at least 2 feet long.
6. Start the dust collection system.
7. Set depth of cut to approximately 1/32" for a test pass.
8. Lower carriage lock lever. The carriage should not move when attempting to adjust its height.
9. Turn on the planer and begin feeding the workpiece. Feed rollers should pull the workpiece through the planer. Verify the entire top surface is cut.
10. Turn off the planer and inspect the workpiece for any defective finish.
11. Using a caliper, check workpiece thickness is uniform side-to-side. This ensures the cutterhead is parallel with the planer table.
12. Check the cutterhead height scale. It should point at the same value as shown on the caliper.
13. Check for excessive snipes. A minimum amount of snipe may occur at the ends of the board, and it is expected.

Congratulations! You have completed the test run and your planer is ready for production work. If you discover any issues from the tests, please refer to the troubleshooting section and maintenance section to diagnose issues and make adjustments.

Operation

For safety and to achieve the best results, please take the following steps before processing any workpiece with this planer.

Step 1: Preparation

Only Use Natural, Good Quality Wood

Only plane good quality natural wood materials. Cracked stock, board with loose knots, plywood, and other engineered wood products can break apart and cause severe kickbacks, which can lead to severe injuries and machine damages.

Do not plane treated lumber or anything that contains harmful chemicals, as this will spread wood dust that contains such harmful chemicals. NEVER plane boards that are shorter than 5" as mentioned in the specifications.

Inspect the Workpiece

Carefully inspect the workpiece for foreign objects. Nails, staples, rock chips, and other objects embedded on the wood surface will damage the planer. To avoid chipping/dulling the cutter inserts, it is advised to clean the workpiece with a stiff brush to remove all dirt and foreign objects before planing, especially for rough sawn or reclaimed lumber. Use a metal detector to scan for metal objects as needed.

Check Moisture Content

Check moisture content before the operation. "Green wood" with moisture content over 20% will not cut properly and may jam the machine. Excessive moisture content will also cause the planer's unpainted surface to rust. Besides, as the workpiece dries, the once-flattened surface can become fuzzy and warped again. It is recommended to allow a workpiece to dry and stabilize before it is processed.

Warped Stock

The workpiece should have a flat bottom to be processed by a planer. It is acceptable to process a slightly cupped board with the cupped side facing down and begin with light cuts. Boards with moderate cupping, bowing, or twisting should have one side face-jointed before being processed by a planer.

Avoid using boards with severe warping, as they can be unstable and might cause severe kickbacks during operation.

Glue Deposits

Glue left on workpiece surface can dull cutters and impact cut quality. Scrape off all glue deposits from the workpiece before the operation.

Wood Grain Direction

This planer is designed to plane WITH the grain direction of the wood. Do not plane cross-grain or end-grain. Severe kickback and chipping may occur.

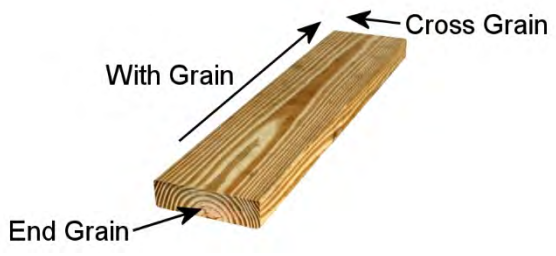

Step 2: Setting Depth of Cut

This planer can remove at most 3/64” of material per pass. For stocks that are less than 5” wide, this planer can remove as much as 5/64" per pass. For best results, it is recommended to take light passes when approaching the desired thickness.

Wood Hardness

The operator should reduce the maximum depth of cut for wood types that are extremely hard or extremely soft. Hardwood increases the planer’s workload, and very soft wood species tend to show degraded finish when receiving aggressive cuts.

For your reference, this Janka scale shows the hardness of wood types that are commonly used. It ranks the hardness of various wood types by measuring the amount of force (in lbs.) required to embed a 0.444” steel ball halfway into the wood.

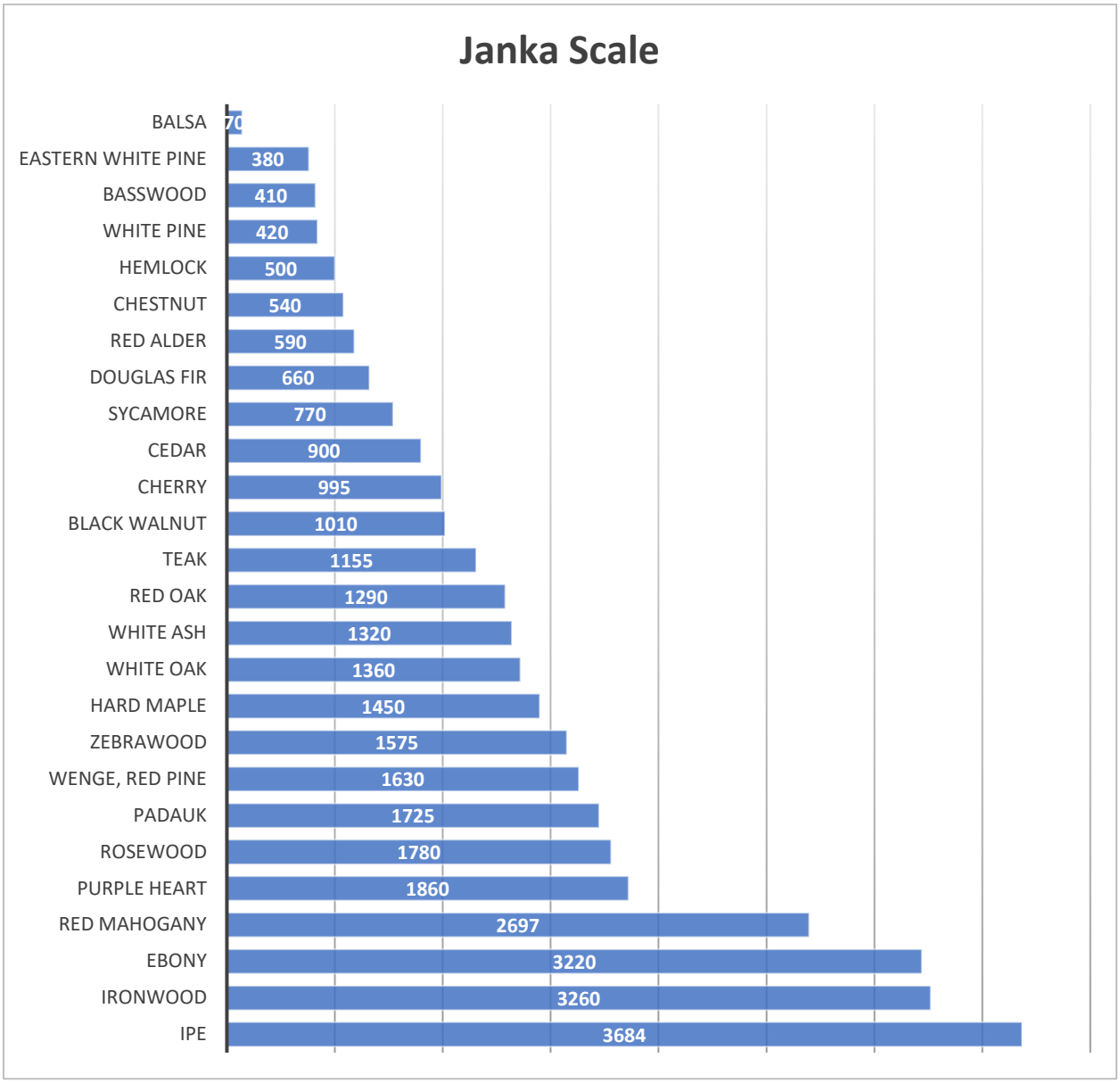

Step 3: Select Feed Direction

Inspect the workpiece and identify the direction of the edge grain. Choose a feed direction such that cutters will cut WITH grain to minimize tear outs.

Good – Planer cuts WITH the grain

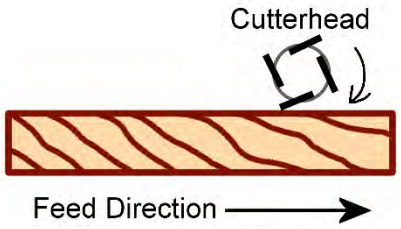

Not Ideal – Planer cuts AGAINST the grain

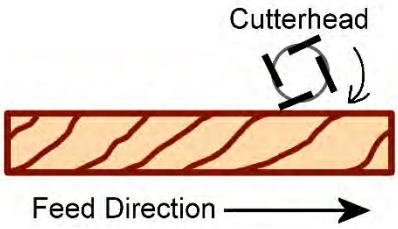

Sometimes it is impossible to cut with the grain for the entire length of a workpiece. In this case, try feeding the workpiece in opposite direction and see what works best. Reducing the depth of cut can also help improving cut quality.

Step 4: Planing Wood to Desired Thickness

With the above preparation steps completed, the workpiece is ready for planing.

⚠ **WARNING**	**ALWAYS wear goggles and other protection devices when operating this machine. Stay on the side of the planer to avoid kickback related accidents. NEVER look inside the planer during operation. Failing to comply may result in serious injuries or death.**

⚠ **CAUTION**	**Use an ear protection device to prevent hearing loss. Ensure dust collection system is functional and use a dusk mask to avoid inhaling harmful airborne particles.**

1. Put on protection devices.
2. If you have a long workpiece, make sure it is properly supported throughout the process. Bolt down the planer on a stable surface as needed.
3. Measure workpiece thickness and set the initial depth of cut to no more than 1/32”. This allows feed rollers to properly engage the workpiece, and at the same time not taking too much materials off for a test pass.
4. Turn on the dust collection system and planer.
5. While standing on the side of the planer, gently feed the workpiece with the face jointed side down. Once the infeed roller engages the workpiece, allow the machine to feed the workpiece. **DO NOT** force feed the workpiece through the planer.

   If infeed roller does not engage the workpiece:
   - Carriage height is set too high.
   - Stop the machine and wait for it to come to a complete stop, then remove the workpiece.
   - Lower carriage height, and restart from step 4.

If machine stalls or workpiece gets stuck:

- Carriage height is set too low.
- Stop the machine and wait for it to come to a complete stop, then remove the workpiece.
- Reduce the depth of cut, and restart from step 4.

6. If the workpiece is feeding properly, wait until the entire workpiece clears the outfeed roller, then remove the workpiece.
7. After the initial pass, measure workpiece thickness in the midsection.

If more material needs to be removed, continue with the following steps.

8. If you need to remove a lot of material, run a few passes with deeper cuts, then finish with a light pass with shallow cuts.
9. The depth of cut for each pass should be less than 3/64”. For workpieces 5” wide or less, the depth of cut can be as much as 5/64". Reduce the maximum depth of cut for harder wood types. Use DRO or the depth gauge on the carriage elevation crank to measure the depth of cut.
10. Repeat until the workpiece is plane down to the desired thickness.

Turn the machine off when the operation completes.

Common Cutting Problems

Snipe

When a workpiece is not properly supported as it enters or leaves the machine, the ends of the workpiece will have more materials removed than the rest of the section. To mitigate this problem, hold the workpiece up slightly as it enters and leaves the machine. Sometimes, a small amount of snipe is inevitable. The best way to fully eliminate snipe is to prepare a workpiece with extra length, and then trim the ends when planing is done.



Chipping

Happens when cutting against the grain direction. See "**Select Feed Direction**" in this section. For highly figured lumber and areas near a knot, some amount of chipping is normal. In this case, moistening the problematic area before planing can sometimes mitigate the issue.



Chipping can also cause by dirty or dull cutters. If chipping happens while planing straight grain stocks, inspect cutter inserts and remove all resin buildups. Rotate/replace dull cutter inserts when they are dull.

Indentation

This can happen when some foreign object is pressed on the workpiece when it passes through the planer. Remove all resin buildups from the rollers, cutterhead, and table. Also, check the dust collection system and ensure all wood chips generated are effectively removed.

Fuzzy Grain

Can happen when planing wood with high moisture content or if the cutter is dull. Sometimes this is unavoidable due to the nature of certain wood types. To mitigate this issue, avoid using wood with high moisture content and use sharp cutters.

Accessories

Oliver Machinery has a collection of accessories for your planer. Please visit our website **OLIVERMACHINERY.NET** to purchase these items.

You may also call **1-800-559-5065** or email **PARTS@OLIVERMACHINERY.NET** to purchase these items. We are available Monday through Friday, 9 AM - 5 PM Pacific Time.

> ⚠ **WARNING** **Using unapproved accessories may cause the machine to malfunction, resulting in serious injury and/or machine damage. Only use accessories recommended for this machine.**

Cutter Inserts



Genuine four-sided indexable carbide cutter insert that will fit the cutterhead of Oliver 10044 Planer.

Parts number: **A-BYRD 10**

Motor Carbon Brush



Carbon brushes for this planer have a rated life span of 170 hours. Please inspect carbon brushes regularly. Replace as a pair when they are worn.

Parts number: **430012-000**

Please visit our website at **WWW.OLIVERMACHINERY.NET/ACCESSORIES** for other recommended accessories.

Maintenance

Routine maintenance keeps your planer in top shape. Please follow the maintenance schedule below, and use the maintenance record worksheet attached in the back of the manual to document all tasks completed. **NOTICE:** Maintenance schedule may vary for individual users due to different situations and safety requirements.

⚠ **WARNING**	**Disconnect the machine from the power source before any maintenance work is performed. After servicing the planer, remove all wrenches and tools before restarting the machine. Failure to comply can cause serious injury!**

Maintenance Schedule

Interval	**Task**
Every day	Remove dust buildups from the planer.
	Inspect power cord and plug for signs of aging and damages. Replace as needed.
Every week	Inspect cutterhead and rollers. Remove any dust and resin accumulation.
	Inspect/rotate/replace worn cutter inserts.
	Wax planer bed and extension wings.
Every Month	Inspect motor carbon brushes. Replace as a pair when worn. Motor brush life expectancy: **170 Hours**
Every 6 months	Inspect the elevation of the extension tables. Adjust as needed.
	Inspect V-belt and replace it if it shows signs of cracking or glazing.

Notice: Motor bearings are permanently sealed and lubricated, and do not require lubrication.

Service Cutterhead and Rotate Cutter Inserts

> ⚠ **CAUTION** **Cutter inserts are extremely sharp. Protect your hands with thick leather gloves to avoid injuries.**

1. **Disconnect the planer from the power source!!**
2. Remove dust hood.
3. Remove cutterhead cover with a T-30 Torx wrench.

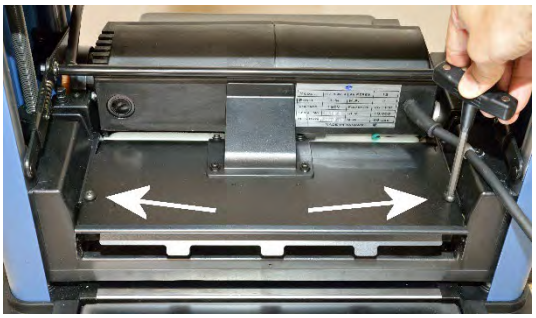

4. Remove dust and resin accumulations on cutterhead and areas nearby.
5. Rotate cutter inserts 90° clockwise when they get dulled or nicked. Use a permanent marker to mark the new edge to be used.
6. To rotate/replace a cutter insert, remove the Torx screw with a T-25 Torx bit. Turn **COUNTERCLOCKWISE** to loosen the screw.

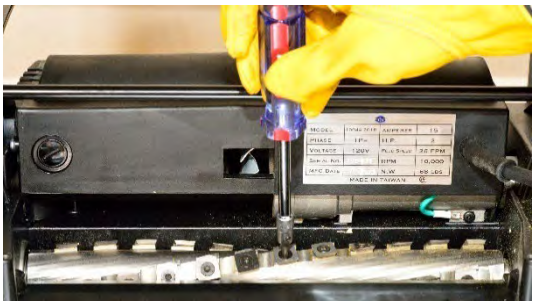

7. With the cutter insert removed from its seat, thoroughly clean the seat with a vacuum.

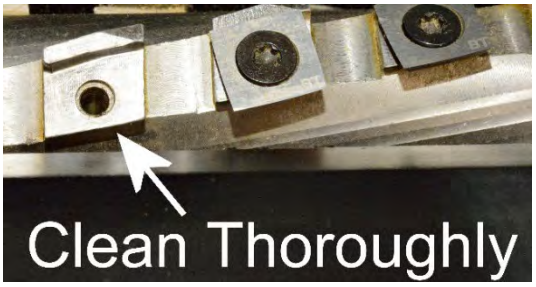

IMPORTANT: Obstacles between the insert and its seat will create uneven pressure against the insert. This will impact cut quality and may cause the insert to break.

8. Inspect the Torx screw. Replace any damaged screws. Lubricate screw thread with a thin coat of lightweight machine oil.

   IMPORTANT: Do not apply an excessive amount of lubrication, or the Torx screw and the cutter insert will not sit properly.

9. Reinstall cutter insert with the marked cutting edge facing out. Secure it with 45 lbs.-inch of torque.
10. To make sure the cutter insert is seated properly, slightly pull it towards the screw and away from its seat. Let the screw pull the cutter insert into position while tightening the screw.

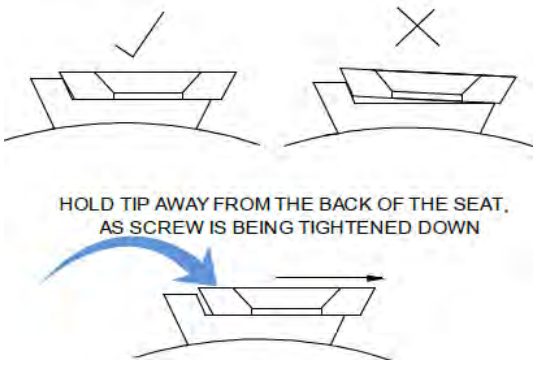

   IMPORTANT: Do not overtighten the screw or the inserts may break. Do not use power tools to tighten the Torx screws as it can strip the screws.

11. Reinstall cutterhead cover and dust hood when cutterhead service completes.

Inspect / Replace Poly V-Belt

1. **Disconnect the planer from the power source!!**
2. The drive belt of the planer is located behind the right panel. To access the drive belt, begin with removing the cutterhead elevation crank.
3. Loosen four screws that hold the top panel in place.

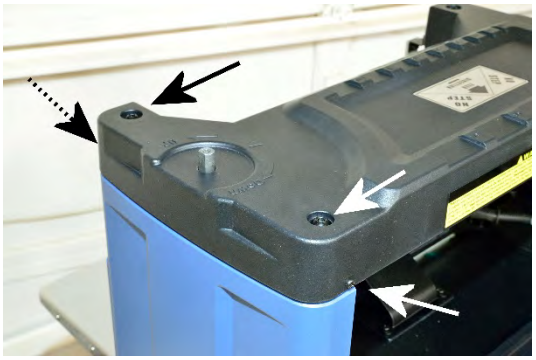

4. Slightly lift the top panel and remove the right panel.



5. Inspect the drive belt for signs of aging. Replace the belt as needed.
6. To replace the drive belt, remove the old belt from the pulleys by walking it out from the pulleys, or simply cut it off.



7. Install new belt by gently walking the belt back into the pulleys. A new belt can be very tight, so walk the belt back to the pulleys one groove at a time on each pulley. Refrain from using tools to pry the belt back in place as it may overstretch the new belt and damage the pulleys.



8. Rotate the pulleys and make sure the drive belt is fully seated into the grooves of the pulleys.
9. Reinstall side panel and cutterhead elevation crank when belt maintenance completes.

Inspect / Replace Motor Carbon Brushes

1. **Disconnect the planer from the power source!!**
2. This planer is equipped with two motor carbon brushes. They are located in the front and back of the carriage.

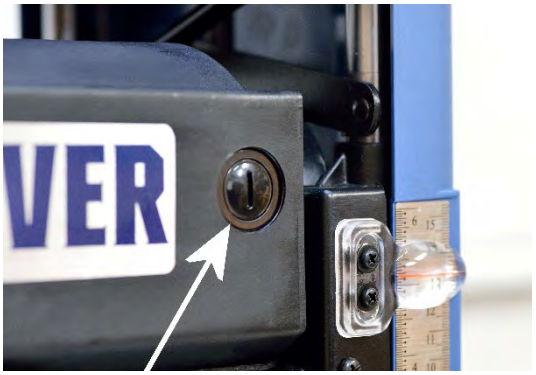



3. To access the motor carbon brushes, remove the cover with a flat head screwdriver.



4. Inspect motor carbon brushes and replace them as a pair when they are significantly worn. Carbon brushes are available on our website:

   https://olivermachinery.net/accessories

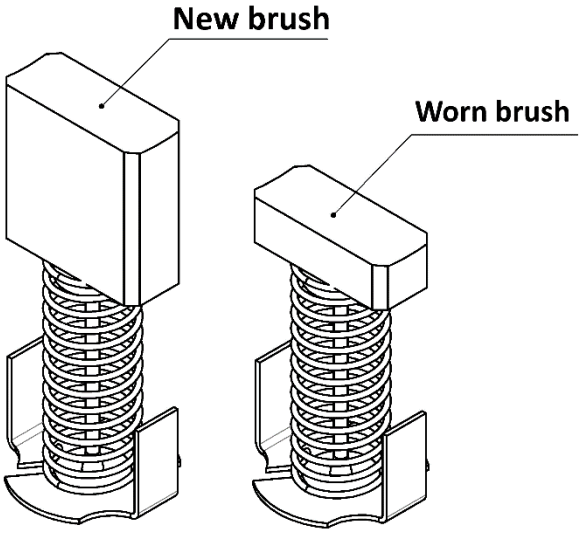

5. Reinstall motor carbon brushes and covers.

Inspect / Adjust Extension Wing Elevation

Extension wing elevation was adjusted in the factory and should not require adjustments initially.

The extension wings were adjusted such that the outside edge of the extension wing is slightly elevated above the planer bed, and the inside edge is below the planer bed. This setup provides adequate support while minimizing snipe and stock feeding resistance.

1. **Disconnect the planer from the power source!!**
2. To inspect extension wing elevation, place two pennies on each end of the planer bed, then use the pennies to support a straight edge. The straight edge needs to be long enough to span across the planer bed and the extension wings.

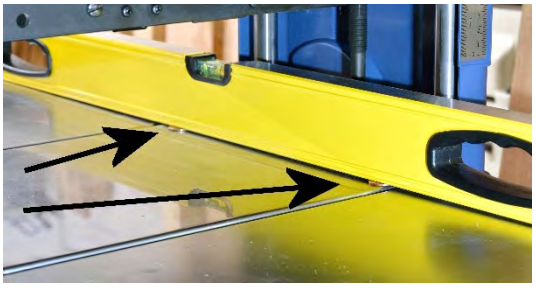

3. If extension wings are properly elevated, the straight edge should flush with the outside edge of the extension wings.
4. If adjustment is needed, lift the extension wing, and locate the stop bolts for setting elevation.

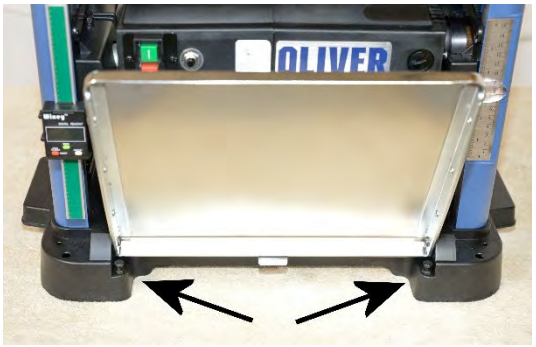

5. Loosen the jam nuts. Rotate stop bolts to readjust the elevation of the extension wing.
6. Tighten jam nuts and re-check elevation.

Adjust Cutterhead Height Scale

Cutterhead height scale is pre-calibrated in the factory. It can be re-adjusted to accommodate a different viewing angle, or if the pointer is shifted.

1. Prepare a piece of 2x4 with a flat bottom for calibration.
2. Plane the board down to 1-1/4” or 1”. Use a caliper to measure the mid-section of the board for thickness.
3. Loosen the screws that hold the pointer in place.

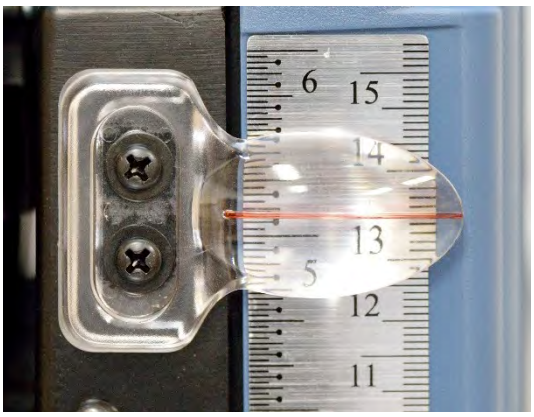

4. Shift the pointer so it is pointing at the exact value as the thickness of the board.
5. Re-tighten the screws.

Adjust Carriage Elevation Chain Tension

Carriage elevation chain tension was set in the factory and does not require adjustments initially. Over time, the chain may stretch. Tighten the chain if excessive play is felt when adjusting the height of the cutterhead.

1. **Disconnect the planer from the power source!!**
2. Turn the planer sideways to expose the chain which is located underneath the base of the planer.
3. Loosen the hex cap screw that locks the chain tensioner.

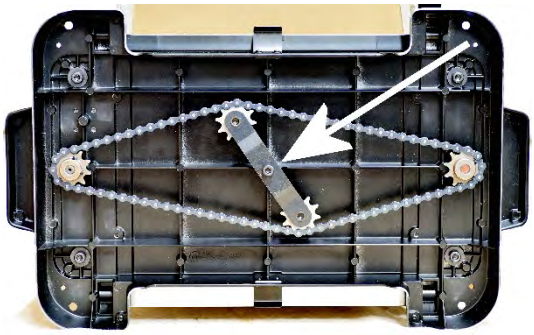

IMPORTANT: Keep the chain on the sprockets while adjusting its tension. If the chain falls off from the sprockets, it can take some time to recalibrate the planer.

4. Rotate the chain tensioning bracket to tighten the chain, then retighten the locking cap screw. The chain should deflect by approximately 3/8" when it is compressed between sprockets. The chain is too tight if the cutterhead elevation crank becomes difficult to turn.
5. Clean and lubricate chain as needed.

Troubleshooting

Problem	Possible Cause	Possible Solution
Machine does not start.	Machine is not connected to a power source.	1. Make sure the machine is plugged in. 2. Check the electrical panel for a tripped circuit breaker or a blown fuse. 3. Ensure all electrical connections have good contacts.
	Low voltage / current.	1. If an extension cord is used, use a shorter/heavier extension cord. 2. Have an electrician to check/repair the power circuit.
	Worn motor brushes.	Replace motor brushes.
	Faulty switch/motor.	Contact customer service for further assistance.
Machine trips thermal protection / circuit breaker, or blow fuses.	Machine is undersized for the operation.	Reduce the depth of cut.
	Workpiece moisture level is too high.	Only plane wood with moisture level below 20%.
	Machine is jammed.	Inspect the cutterhead and make sure it is not obstructed by woodchips. Check dust hood and clear blockages.
	Too much load on a circuit.	Make sure the power circuit is sized for this machine. If the circuit is shared, ensure it is sized to supply power for all items in the circuit.
	Motor issue.	Contact customer service for further assistance.
Machine stalls during operation.	Machine is undersized for the operation.	Reduce the depth of cut.
	Dull cutters.	Rotate/replace cutter inserts.
	Belt slipping.	Clean belt and pulleys. Replace belt as needed.
	Motor issue.	Contact customer service for further assistance.
Machine stopped during operation.	Overload protection triggered.	Hit the OFF button and allow the machine to cool down for at least 3 minutes, then press the overload protection reset button. Reduce the depth of cut before continue.
Digital readout not functional.	Dead battery.	Replace the battery (AAA type).
	Frozen display	Remove batteries. Wait for 1 minute and reinstall the batteries.

Problem	Possible Cause	Possible Solution
Workpiece does not feed smoothly.	Dirty planer bed/rollers.	Clean table and rollers. Apply paste wax on the planer bed and extension wings to reduce drag. Do not use silicone lubrication.
	Belt slipping.	Clean belt and pulleys. Replace belt as needed.
Machine vibrates excessively or makes unexpected noise.	Damaged cutter inserts.	Replace cutter inserts.
	Machine stands on uneven surface.	Reposition on a flat, level surface.
	V-belt worn, slipping or hitting belt cover.	Clean belt and pulleys. Replace V-belt if it shows signs of aging.
	Loose components.	Tighten fasteners of the component.
Board thickness does not match the scale's measurement.	Cutterhead height scale is mispositioned.	Adjust scale.
Unable to turn cutterhead elevation crank	Carriage is locked.	Lift carriage lock lever to unlock carriage.
	Carriage is stopped by depth stop.	Adjust the depth stop's minimum height setting. Minimum cutterhead height is 5/32".

Problem	Possible Cause	Possible Solution
Workpiece came out twisted.	Workpiece is twisted before the cut.	Planer is not the tool to flatten a twisted workpiece. Flatten one side with a jointer before proceeding with a planer.
Excessive snipe	Extension wing slope down.	Adjust extension wing elevation.
	Long workpiece is not supported properly.	Use auxiliary rollers to support the long workpiece.
	A small amount of sniping can happen sometimes.	Add an extra 6” length on a workpiece for planing, and then trim off the ends.
End of workpiece chipping	Aggressive depth of cut for the wood type.	Reduce the depth of cut.
	Planing end grain.	Do not plane end grain. Use a drum sander instead.
Chipping in workpiece surface.	Damaged cutter.	Rotate/replace cutter insert.
	Planing against/across grain; or knots.	Avoid planing workpieces with knots. Plane with grain whenever possible. Moisten problematic areas before planing.
	Too much material removed in one pass.	Reduce the depth of cut.
Indentation in workpiece surface.	Dirty rollers.	Remove all buildups on infeed, outfeed, and table rollers.
	Inefficient chip removal.	Check the dust collection system for suction.
Fuzzy looking finish.	Wood moisture content too high.	Only process wood with less than 20% moisture content.
	Dull cutter.	Rotate/replace cutter insert.
	Some wood types tend to have fuzzy grain.	Adjust the depth of cut. Use sharp cutters.
Glossy looking finish.	Dull cutter.	Rotate/replace cutter insert.
	Cutting depth too shallow.	Increase depth of cut.
Long line or ridges running along the length of board.	Chipped cutter.	Rotate/replace cutter insert.

Wiring Diagram

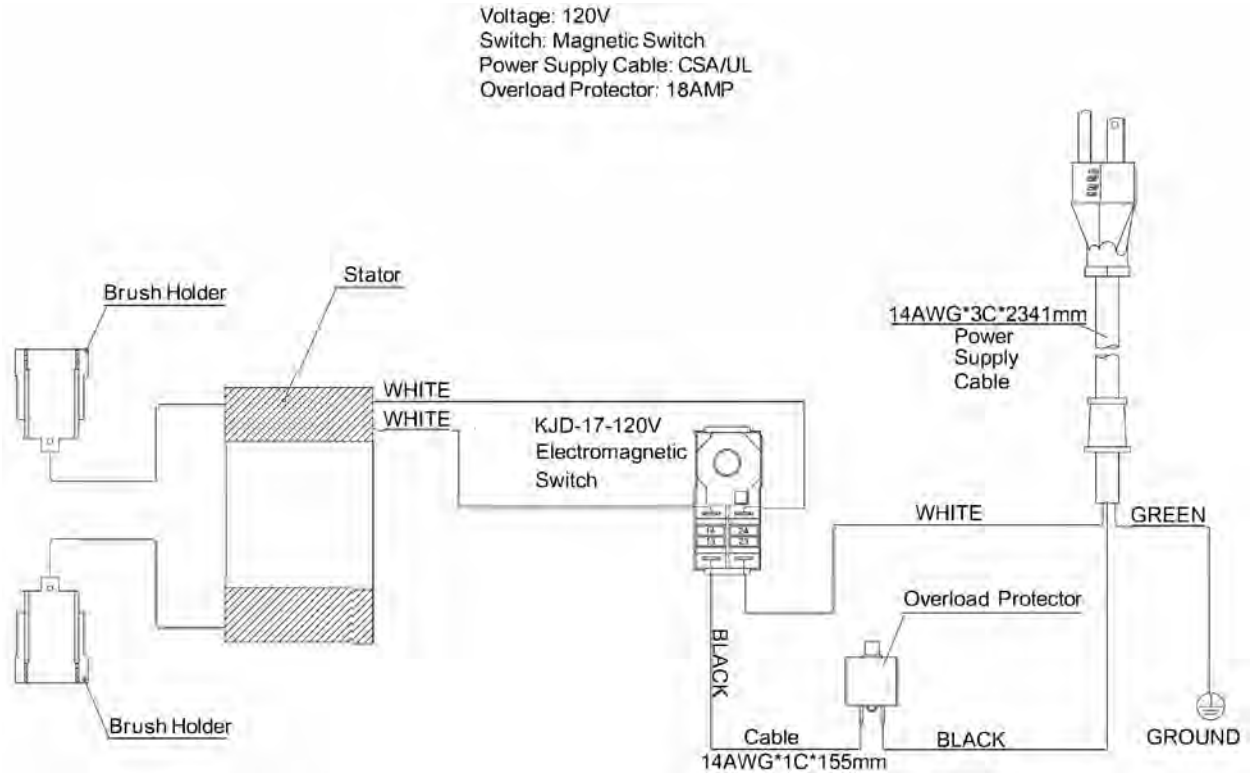

Parts List

Carriage and Cutterhead Assembly

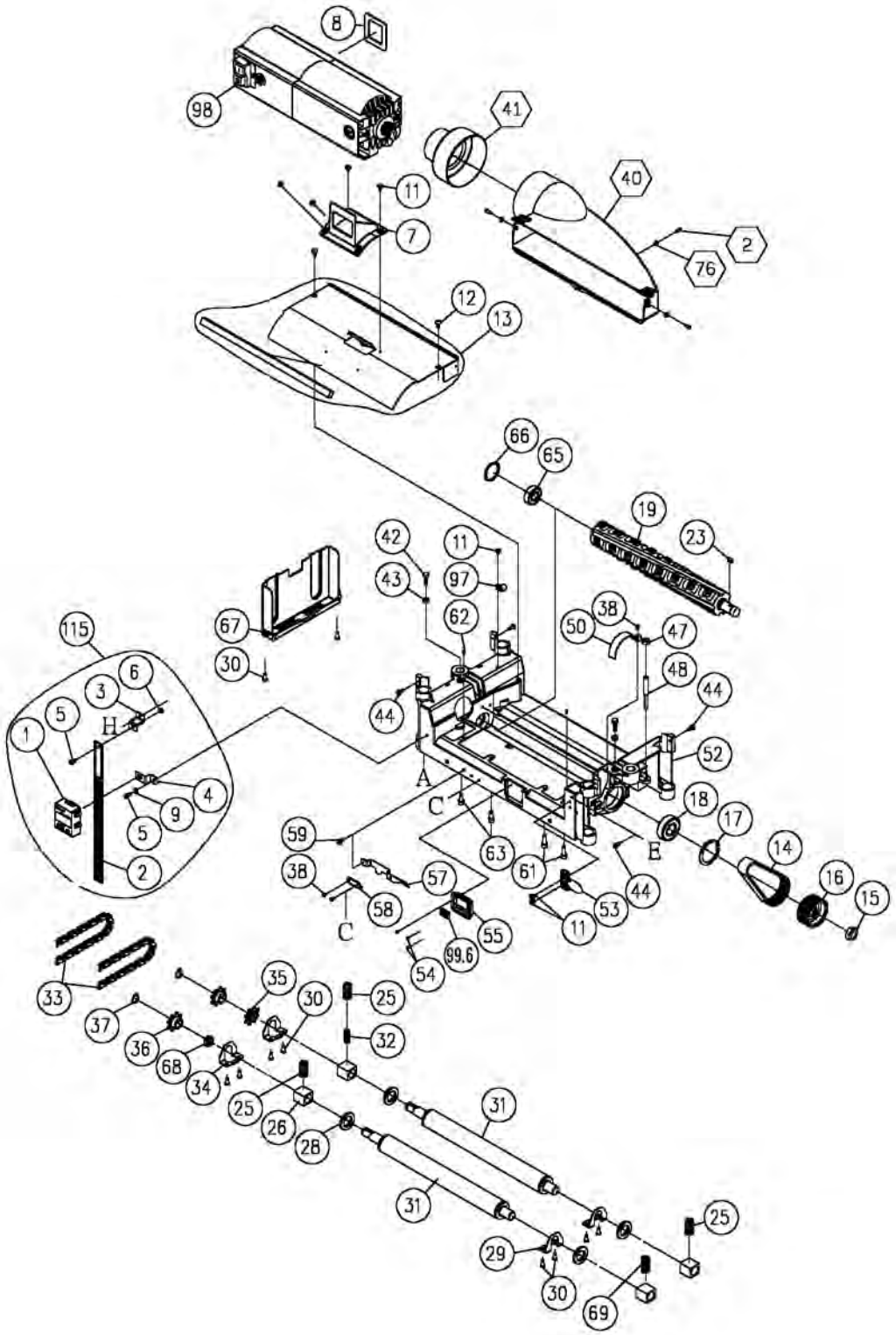

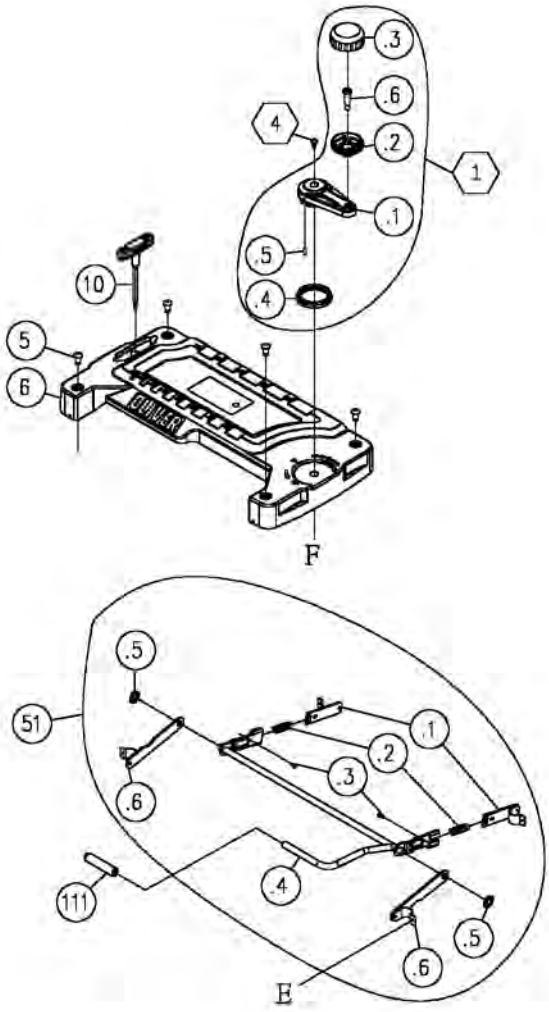
.3
.6
4
.2
1
.1
.5
.4
10
5
6
F
.5
51
.1
.2
.3
.6
111
.4
.5
.6
E

Body and Base Assembly

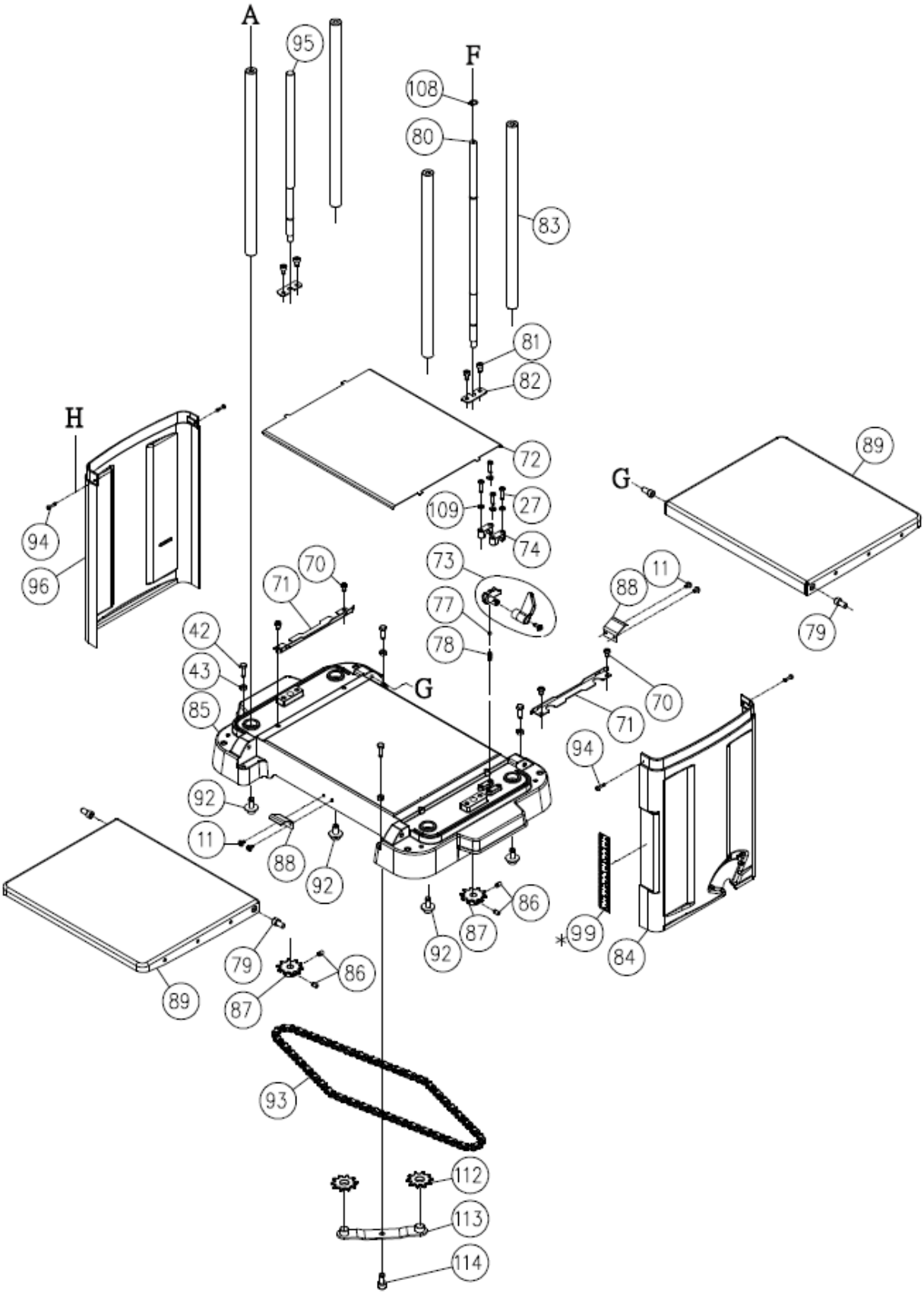

Key	Part Number	Descriptions	Specifications	QTY
1	924830-000	Handle Assembly		1
1.1	090354-148	Elevation Arm		1
1.2	250260-615	Handwheel		1
1.3	250262-615	Handwheel Cap		1
1.4	251421-675	Ring with Depth Marking		1
1.5	250662-615	Pin		1
1.6	360302-901	Pan Head Phillips Screw with Lock Washer		1
2	000302-103	Pan Head Phillips Screw	M4*0.7P*10	3
4	049103-104	Star Screw	M6*1.0P*12	1
5	000802-101	Bottom head socket screw	M8*1.25P*16	4
6	251399-615	Upper Cover		1
7	251400-615	Vent Lid		1
8	200111-615	Foam	Black-2mm	1
10	923507-000	T Wrench		1
11	001601-101	Pan Head Phillips Screw with Washer	M4*0.7P*8/4*10*0.8t	11
12	029301-101	Star Screw with Lock Washer	M5*0.8P*10/5.1*7.9	2
13	924827-000	Dust Plate Assembly w/Foam		1
14	014303-000	Belt	135J-9	1
15	008036-200	Hex Nut	M16*1.5P(23B*8H)	1
16	110010-000	Cutterhead Pulley		1
17	010107-000	R Ring	RTW-47	1
18	030208-001	Bearing	6204-2NSE	1
19	924888-000	Byrd Shelix Cutterhead Assembly		1
	040704-000	Torx Screwdriver	T-25	1
	038201-103	Torx Screw	10-32	36
	A-BYRD 10	Inserts Sold in Packs of 10		36
23	012003-002	Key	5*5*10	1
25	280035-901	Spring		3
26	130088-000	Bushing		4
27	001602-704	Pan Head Phillips Screw	M5*0.8P*20	4
28	660010-000	Washer		4
29	170737-902	Bracket (Right)		2
30	000303-104	Pan Head Phillips Screw	M5*0.8P*12	10
31	340098-000	Rubber Roller		2
32	280036-901	Spring		1
33	016204-000	Chain	#410*26P	2
34	170736-902	Bracket (Left)		2
35	380257-901	Sprocket		1
36	150004-000	Sprocket		2
37	010006-000	S Ring	STW-15	2
38	000302-102	Pan Head Phillips Screw	M4*0.7P*8	3

Key	Part Number	Descriptions	Specifications	QTY
40	250114-615	Dust Shroud		1
41	250133-615	Dust Shroud Hose Adaptor		1
42	000002-111	Hex Screw	M6*1.0P*20	6
43	008005-100	Hex Nut	M6*1.0P(10B*5H)	6
44	002401-101	Pan Head Phillips Lock Screw with Lock Washer	M4*0.7P*12/4*10*0.8t	4
47	008006-100	Hex Nut	M8*1.25P(13B*6.5H)	1
48	360309-901	Shaft		1
50	170315-901	Cover for Belt Pulley		1
51	924820-000	Linkage Assembly		1
51.1	921937-000	Link Brackets		2
51.2	280039-901	Spring		2
51.3	000302-102	Pan Head Phillips Screw	M4*0.7P*8	2
51.4	924819-000	Handle		1
51.5	010304-000	SPN Retaining Ring	SPN-10	2
51.6	921938-000	Rod Bracket		2
52	090093-147	Carriage		1
53	250141-620	Magnifier		1
54	000301-101	Pan Head Phillips Screw	M3*0.5P*6	3
55	251401-615	Scale Plate		1
57	170314-458	Indicator		1
58	170313-901	Plate		1
59	290012-901	Shoulder Screw		1
61	230238-905	Self-Tapping Screw with Lock Washer		2
62	360297-000	Pin		2
63	001802-102	Cap Screw with Washer	M6*1.0P*20/6.5*10.5	2
65	030206-001	Bearing	6202-2NSE	1
66	010103-000	R Ring	RTW-35	1
67	250086-615	Cover for Chain		1
68	160031-000	Spacer		1
69	280037-000	Front Bracket Spring		1
70	000304-102	Pan Head Phillips Screw	M6*1.0P*10	4
71	170296-901	Plate		2
72	170311-000	Panel for Table Top		1
73	924828-000	Depth Positioning Assembly		1
	130394-903	Positioning Plate		1
	251404-615	Handle		1
	002402-101	Pan Head Phillips Lock Screw w/Washer	M5*0.8P*12/5*10*1.0t	1
74	130392-903	Bracket		2
76	048102-101	Flat Washer	4.3*10*1.0t	3
77	017002-000	Ball	6	1
78	280052-000	Spring		1

Key	Part Number	Descriptions	Specifications	QTY
79	000104-107	Cap Screw	M8*1.25P*15	4
80	361376-902	Long Rod		1
81	000103-102	Cap Screw	M6*1.0P*10	4
82	270005-000	Positioning Plate		2
83	360307-000	Post		4
84	251402-000	Cover (Right)		1
85	090353-147	Base		1
86	001902-101	Screw	M6*1.0P*10+D124	4
87	150005-000	Sprocket		2
88	270007-901	Spring Plate		2
89	921933-000	Extension Wing Assembly		2
92	001701-101	Cap Screw with Washer	M8*1.25P*20/8*23*2.0t	4
93	016211-000	Chain	#410*82P	1
94	001201-501	Self-Taping Screw	M4*1.41P*12	4
95	360306-902	Short Lead Screw		1
96	251403-000	Cover (Left)		1
97	021102-000	Cable Clamp	ACC-2.5	1
98	910140-000	Motor Assembly		1
	430012-000	Carbon Brush Set	Set of 2	1
	920530-000	CSA Molded Plug Assembly	14AWG*3C*2341mm	1
	938030-000	Magnetic Switch Assembly	110V-120V	1
99	575140-000	Scale		1
99.6	575223-000	Scale		1
108	010002-000	STW-11 Retaining Ring	STW-11	1
109	006003-009	Flat Washer	5.2*10*1.0t	4
111	251437-615	Knob		1
112	150006-000	Sprocket		2
113	170310-901	Sprocket Bracket		1
114	001803-102	Cap Screw with Lock Washer	M8*1.25P*20/8.2*13.7	1
115	925407-000	Wixey Digital Readout Assembly	Wixey Model WR510S	1

Spare Parts

Part Number	Descriptions	Specifications	QTY
A-BYRD 10	Carbide Cutter Insert (Sold in Box of 10)		10
038201-103	Torx Screw	#10-32UNF*1/2"	10
430012-000	Carbon Brush Set	Set of 2	1

Maintenance Record

Date	Task	Operator

Notes

Warranty and Service

Oliver Machinery makes every effort to assure that its equipment meets the highest possible standards of quality and durability. All products sold by Oliver Machinery are warranted to the original customer to be free from defects for a period of two (2) years on all parts excluding electronics and motors which are warranted for one (1) year from the date of shipment. Oliver Machinery's obligation under this warranty shall be exclusively limited to repairing or replacing products or parts or components, at its sole option, determined by Oliver Machinery to be defective. Oliver Machinery shall not be required to provide other form of indemnity or compensation including but not limited to compensatory damages.

This warranty does not apply to defects due to direct or indirect misuse, abuse, negligence, accidents, unauthorized repairs, alternation outside our facilities, lack of maintenance, acts of nature, or items that would normally be consumed or require replacement due to normal wear and tear.

OTHER TERMS

To obtain and exercise the warranty right, please call 800-559-5065 or fill out warranty request form online at www.olivermachinery.net.
Warranty parts are shipped via Parcel or Ground. Additional charges will occur and charge to customers if express shipping is required.

DISCLAIMER

Under no circumstances shall Oliver Machinery be liable for death, personal or property injury, or damages arising from the use of its products.

Oliver Machinery reserves the right to make changes without prior notice to its products to improve function or performance or design.

FOR MORE INFORMATION

If you need assistance or have questions beyond what is covered in the scope of this warranty information, please call 800-559-5065 or email us at info@olivermachinery.net.

Appendix

US Standard – Metric Conversion Chart

Fractions	Decimal In.	Millimeters
1/64	.0156	.396
1/32	.0312	.793
3/64	.0469	1.190
1/16	.0625	1.587
5/64	.0781	1.984
3/32	.0937	2.381
7/64	.1094	2.778
1/8	.125	3.175
9/64	.1406	3.571
5/32	.1562	3.968
11/64	.1719	4.365
3/16	.1875	4.762
13/64	.2031	5.159
7/32	.2187	5.556
15/64	.2344	5.953
1/4	.25	6.350
17/64	.2656	6.746
9/32	.2812	7.143
19/64	.2969	7.540
5/16	.3125	7.937
21/64	.3281	8.334
11/32	.3437	8.731
23/64	.3594	9.128
3/8	.375	9.525
25/64	.3906	9.921
13/32	.4062	10.318
27/64	.4219	10.715
7/16	.4375	11.112
29/64	.4531	11.509
15/32	.4687	11.906
31/64	.4844	12.303
1/2	.5	12.700

Fractions	Decimals In.	Millimeters
33/64	.5156	13.096
17/32	.5312	13.493
35/64	.5469	13.890
9/16	.5625	14.287
37/64	.5781	14.684
19/32	.5937	15.081
39/64	.6094	15.478
5/8	.625	15.875
41/64	.6406	16.271
21/32	.6562	16.668
43/64	.6719	17.065
11/16	.6875	17.462
45/64	.7031	17.859
23/32	.7187	18.256
47/64	.7344	18.653
3/4	.75	19.050
49/64	.7656	19.446
25/32	.7812	19.843
51/64	.7969	20.240
13/16	.8125	20.637
53/64	.8281	21.034
27/32	.8437	21.431
55/64	.8594	21.828
7/8	.875	22.225
57/64	.8906	22.621
29/32	.9062	23.018
59/64	.9219	23.415
15/16	.9375	23.812
61/64	.9531	24.209
31/32	.9687	24.606
63/64	.9844	25.003
1.0	1.	25.400



Oliver Machinery is always adding new Industrial Woodworking products to the line.

For complete, up-to-date product information, visit us online at:

WWW.OLIVERMACHINERY.NET

or call toll free 1-800-559-5065

** SAVE THIS MANUAL FOR FUTURE REFERENCES. **