EPSON

SCARA ROBOT

G6 series

MANIPULATOR MANUAL

Rev.20 EM179R3527F

MANIPULATOR MANUAL G6 series Rev.20

SCARA ROBOT

G6 series Manipulator Manual

Rev.20

Copyright © 2007-2017 SEIKO EPSON CORPORATION. All rights reserved.

FOREWORD

Thank you for purchasing our robot products.
This manual contains the information necessary for the correct use of the manipulator.
Please carefully read this manual and other related manuals before installing the robot system.
Keep this manual handy for easy access at all times.

WARRANTY

The Manipulator and its optional parts are shipped to our customers only after being subjected to the strictest quality controls, tests, and inspections to certify its compliance with our high performance standards.

Product malfunctions resulting from normal handling or operation will be repaired free of charge during the normal warranty period. (Please ask your Regional Sales Office for warranty period information.)

However, customers will be charged for repairs in the following cases (even if they occur during the warranty period):

1. Damage or malfunction caused by improper use which is not described in the manual, or careless use.
2. Malfunctions caused by customers' unauthorized disassembly.
3. Damage due to improper adjustments or unauthorized repair attempts.
4. Damage caused by natural disasters such as earthquake, flood, etc.

Warnings, Cautions, Usage:

1. If the Manipulator or associated equipment is used outside of the usage conditions and product specifications described in the manuals, this warranty is void.
2. If you do not follow the WARNINGS and CAUTIONS in this manual, we cannot be responsible for any malfunction or accident, even if the result is injury or death.
3. We cannot foresee all possible dangers and consequences. Therefore, this manual cannot warn the user of all possible hazards.

TRADEMARKS

Microsoft, Windows, and Windows logo are either registered trademarks or trademarks of Microsoft Corporation in the United States and/or other countries. Other brand and product names are trademarks or registered trademarks of the respective holders.

NOTICE

No part of this manual may be copied or reproduced without authorization.
The contents of this manual are subject to change without notice.
Please notify us if you should find any errors in this manual or if you have any comments regarding its contents.

MANUFACTURER

SEIKO EPSON CORPORATION

Regarding battery disposal

The crossed out wheeled bin label that can be found on your product indicates that this product and incorporated batteries should not be disposed of via the normal household waste stream. To prevent possible harm to the environment or human health please separate this product and its batteries from other waste streams to ensure that it can be recycled in an environmentally sound manner. For more details on available collection facilities please contact your local government office or the retailer where you purchased this product. Use of the chemical symbols Pb, Cd or Hg indicates if these metals are used in the battery.

This information only applies to customers in the European Union, according to DIRECTIVE 2006/66/EC OF THE EUROPEAN PARLIAMENT AND OF THE COUNCIL OF 6 September 2006 on batteries and accumulators and waste batteries and accumulators and repealing Directive 91/157/EEC and legislation transposing and implementing it into the various national legal systems.
For other countries, please contact your local government to investigate the possibility of recycling your product.

The battery removal/replacement procedure is described in the following manuals:
Controller manual / Manipulator manual (Maintenance section)

Before Reading This Manual

This section describes what you should know before reading this manual.

Structure of Control System

The G6 series Manipulators can be used with the following combinations of Controllers and software.

The operating methods and descriptions are different depending on which software you are using. The following icons are put beside appropriate text as necessary. Use the descriptions that pertain to the software you are using.

Controller		Software
Name	Structure	
RC180	Controller	EPSON RC+ 5.0
RC620	Control Unit Drive Unit	EPSON RC+ 6.0
RC700-A	Control Unit Drive Unit	EPSON RC+ 7.0 Ver.7.1.2 or later

The motions of the manipulators such as in emergency stops vary depending on the Controllers since they have different control methods. Details are described in the manual.

Turning ON/OFF Controller

When you see the instruction “Turn ON/OFF the Controller” in this manual, be sure to turn ON/OFF all the hardware components. For the Controller composition, refer to the table above.

Shape of Motors

The shape of the motors used for the Manipulator that you are using may be different from the shape of the motors described in this manual because of the specifications.

Setting by Using Software

This manual contains setting procedures by using software. They are marked with the following icon.

EPSON
RC+

Figures in this Manual

The figures of manipulators indicated in this manual are basically Standard-model Manipulator. Unless special instruction is provided, the specifications of Standard-model, Cleanroom-model, and Protected-model (IP54 / IP65) are the same.

Setup & Operation

1. Safety 3

1.1 Conventions ... 3
1.2 Design and Installation Safety ... 4
1.2.1 Strength of the Ball Screw Spline ... 5
1.3 Operation Safety ... 6
1.4 Emergency Stop ... 8
1.4.1 RC180, RC620 ... 8
1.4.2 RC700-A ... 10
1.5 Emergency Movement Without Drive Power ... 12
1.6 ACCELS Setting for CP Motions ... 13
1.7 Warning Labels ... 14

2. Specifications 16

2.1 Features of G6 series Manipulators ... 16
2.2 Model Number and Model Differences ... 17
2.3 Part Names and Outer Dimensions ... 18
2.3.1 Table Top Mounting ... 18
2.3.2 Wall Mounting ... 24
2.3.3 Ceiling Mounting ... 30
2.4 Specifications ... 36
2.5 How to Set the Model ... 39

3. Environments and Installation 40

3.1 Environmental Conditions ... 40
3.2 Base Table ... 42
3.3 Mounting Dimensions ... 44
3.4 Unpacking and Transportation ... 46
3.5 Installation ... 47
3.5.1 Table Top Mounting ... 47
3.5.2 Wall Mounting ... 48
3.5.3 Ceiling Mounting ... 49
3.5.4 Cleanroom-model ... 50
3.5.5 Protected-model ... 50
3.6 Connecting the Cables ... 51
3.7 User Wires and Pneumatic Tubes ... 53
3.8 Relocation and Storage ... 55
3.8.1 Precautions for Relocation and Storage ... 55
3.8.2 Table Top Mounting ... 56
3.8.3 Wall Mounting ... 57
3.8.4 Ceiling Mounting ... 58

4. Setting of End Effectors 59
4.1 Attaching an End Effector 59
4.2 Attaching Cameras and Valves.....60
4.3 Weight and Inertia Settings.....61
4.3.1 Weight Setting 61
4.3.2 Inertia Setting 63
4.4 Precautions for Auto Acceleration/Deceleration of Joint #3 66

5. Motion Range 67
5.1 Motion Range Setting by Pulse Range (for All Joints).....68
5.1.1 Max. Pulse Range of Joint #1 68
5.1.2 Max. Pulse Range of Joint #2 69
5.1.3 Max. Pulse Range of Joint #3 70
5.1.4 Max. Pulse Range of Joint #4 70
5.2 Motion Range Setting by Mechanical Stops.....71
5.2.1 Setting the Mechanical Stops of Joints #1 and #2.....72
5.2.2 Setting the Mechanical Stop of Joint #3.....75
5.3 Setting the Cartesian (Rectangular) Range in the XY Coordinate System of the Manipulator (for Joints #1 and #2).....77
5.4 Standard Motion Range 77

Maintenance

1. Safety Maintenance 83

2. General Maintenance 84
2.1 Maintenance Inspection 84
2.1.1 Schedule for Maintenance Inspection 84
2.1.2 Inspection Point 85
2.2 Overhaul (Parts Replacement) 86
2.3 Greasing.....88
2.4 Tightening Hexagon Socket Head Cap Bolts 90
2.5 Matching Origins 90
2.6 Layout of Maintenance Parts 91
2.6.1 Table Top Mounting 91
2.6.2 Wall Mounting.....92
2.6.3 Ceiling Mounting.....93

3. Covers.....94
3.1 Arm Top Cover.....96
3.2 Arm Bottom Cover.....98
3.3 Arm #1 Cover 99
3.3.1 G6-***S*, G6-***C* 99
3.3.2 G6-***D*, P*.....100
3.4 Connector Plate 101
3.5 Connector Sub Plate.....103

3.6 User Plate 104
3.7 Maintenance Plate 104
3.8 Base Bottom Cover 105

4. Cable 106
4.1 Replacing Cable Unit 107
4.2 Wiring Diagrams 118
4.2.1 Signal Cable 118
4.2.2 Power Cable 119
4.2.3 User Cable 121
4.3 Replacing M/C Cable 122

5. Arm #1 125
5.1 Replacing Joint #1 Motor 126
5.2 Replacing Joint #1 Reduction Gear Unit 128

6. Arm #2 131
6.1 Replacing Joint #2 Motor 132
6.2 Replacing Joint #2 Reduction Gear Unit 135

7. Arm #3 138
7.1 Replacing Joint #3 Motor 139
7.2 Replacing the Timing Belt 143
7.3 Replacing the Brake 146

8. Arm #4 149
8.1 Replacing Joint #4 Motor 150
8.2 Replacing the Timing Belt 154
8.3 Replacing the Brake 162

9. Bellows 165

10. Ball Screw Spline Unit 168
10.1 Greasing the Ball Screw Spline Unit 169
10.1.1 Standard-model 169
10.1.2 Cleanroom-model, Protected-model 170
10.2 Replacing the Ball Screw Spline Unit 171

11. Lithium Battery 177
11.1 Replacing the Battery Unit (Lithium Battery) 179
11.2 Replacing the Battery Board 180

12. LED Lamp 182

13. Calibration 183
13.1 About Calibration....183
13.2 Calibration Procedure 184
13.3 Accurate Calibration of Joint #2....194
13.4 Calibration Procedure without using Calibration Wizard 196

14. Maintenance Parts List 200
14.1 Common Parts 200
14.2 Parts by Environment Model....202

Setup & Operation

This volume contains information for setup and operation of the G6 series Manipulators.

Please read this volume thoroughly before setting up and operating the Manipulators.

1. Safety

Installation and transportation of manipulators and robotic equipment shall be performed by qualified personnel and should conform to all national and local codes. Please read this manual and other related manuals before installing the robot system or before connecting cables.
Keep this manual handy for easy access at all times.

1.1 Conventions

Important safety considerations are indicated throughout the manual by the following symbols. Be sure to read the descriptions shown with each symbol.

WARNING	This symbol indicates that a danger of possible serious injury or death exists if the associated instructions are not followed properly.
WARNING	This symbol indicates that a danger of possible serious injury or death caused by electric shock exists if the associated instructions are not followed properly.
CAUTION	This symbol indicates that a danger of possible harm to people or physical damage to equipment and facilities exists if the associated instructions are not followed properly.

1.2 Design and Installation Safety

Only trained personnel should design and install the robot system. Trained personnel are defined as those who have taken robot system training and maintenance training classes held by the manufacturer, dealer, or local representative company, or those who understand the manuals thoroughly and have the same knowledge and skill level as those who have completed the training courses.
To ensure safety, a safeguard must be installed for the robot system. For details on the safeguard, refer to the *Installation and Design Precautions* in the *Safety* chapter of the *EPSON RC+ User's Guide*.

The following items are safety precautions for design personnel:

⚠ WARNING	■ Personnel who design and/or construct the robot system with this product must read the *Safety* chapter in the *EPSON RC+ User's Guide* to understand the safety requirements before designing and/or constructing the robot system. Designing and/or constructing the robot system without understanding the safety requirements is extremely hazardous, may result in serious bodily injury and/or severe equipment damage to the robot system, and may cause serious safety problems. ■ The Manipulator and the Controller must be used within the environmental conditions described in their respective manuals. This product has been designed and manufactured strictly for use in a normal indoor environment. Using the product in an environment that exceeds the specified environmental conditions may not only shorten the life cycle of the product but may also cause serious safety problems. ■ The robot system must be used within the installation requirements described in the manuals. Using the robot system outside of the installation requirements may not only shorten the life cycle of the product but also cause serious safety problems.

Further precautions for installation are mentioned in the chapter *Setup & Operation: 3. Environments and Installation.* Please read this chapter carefully to understand safe installation procedures before installing the robots and robotic equipment.

1.2.1 Strength of the Ball Screw Spline

If a load exceeding the allowable value is applied to the ball screw spline, it may not work properly due to deformation or breakage of the shaft. If the ball screw spline is applied the load exceeding the allowable value, it is necessary to replace the ball screw spline unit. The allowable loads differ depending on distance where the load is applied to. For calculating the allowable load, see the calculation formula below.

[Allowable bending moment]

G6: $M=27{,}000\ N{\cdot}mm$

Example: If 270 N load is applied at 100 mm from the end of the spline nut

[Moment]

$M=F{\cdot}L=100{\cdot}270=27{,}000\ N{\cdot}mm$

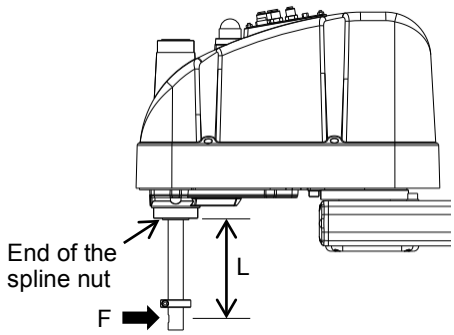

1.3 Operation Safety

The following items are safety precautions for qualified Operator personnel:

WARNING	■ Please carefully read the *Safety-related Requirements* in the *Safety* chapter of the *Safety and Installation* manual before operating the robot system. Operating the robot system without understanding the safety requirements is extremely hazardous and may result in serious bodily injury and/or severe equipment damage to the robot system. ■ Do not enter the operating area of the Manipulator while the power to the robot system is turned ON. Entering the operating area with the power ON is extremely hazardous and may cause serious safety problems as the Manipulator may move even if it seems to be stopped. ■ Before operating the robot system, make sure that no one is inside the safeguarded area. The robot system can be operated in the mode for teaching even when someone is inside the safeguarded area. The motion of the Manipulator is always in restricted (low speeds and low power) status to secure the safety of an operator. However, operating the robot system while someone is inside the safeguarded area is extremely hazardous and may result in serious safety problems in case that the Manipulator moves unexpectedly. ■ Immediately press the Emergency Stop switch whenever the Manipulator moves abnormally while the robot system is operated.

WARNING	■ To shut off power to the robot system, pull out the power plug from the power source. Be sure to connect the AC power cable to a power receptacle. DO NOT connect it directly to a factory power source. ■ Before performing any replacement procedure, turn OFF the Controller and related equipment, and then pull out the power plug from the power source. Performing any replacement procedure with the power ON is extremely hazardous and may result in electric shock and/or malfunction of the robot system. ■ Do not insert or pull out the motor connectors while the power to the robot system is turned ON. Inserting or pulling out the motor connectors with the power ON is extremely hazardous and may result in serious bodily injury as the Manipulator may move abnormally, and also may result in electric shock and/or malfunction of the robot system.

CAUTION	■ Whenever possible, only one person should operate the robot system. If it is necessary to operate the robot system with more than one person, ensure that all people involved communicate with each other as to what they are doing and take all necessary safety precautions. ■ Joint #1, #2, and #4: If the joints are operated repeatedly with the operating angle less than 5 degrees, they may get damaged early because the bearings are likely to cause oil film shortage in such situation. To prevent early breakdown, move the joints larger than 50 degrees for about five to ten times a day. Joint #3: If the up-and-down motion of the hand is less than 10 mm, move the joint a half of the maximum stroke for five to ten times a day. ■ Oscillation (resonance) may occur continuously in low speed Manipulator motion (Speed: approx. 5 to 20%) depending on combination of Arm orientation and end effector load. Oscillation arises from natural oscillation frequency of the Arm and can be controlled by following measures. Changing Manipulator speed Changing the teach points Changing the end effector load

1.4 Emergency Stop

Emergency stop motions of the Manipulators vary due to difference of control methods of the Controllers. See the section for your Controller model.

1.4.1 RC180, RC620

If the Manipulator moves abnormally during operation, immediately press the Emergency Stop switch. Stops the power supply to the motor, and the arm stops in the shortest distance with the dynamic brake and mechanical brake.

However, avoid pressing the Emergency Stop switch unnecessarily while the Manipulator is running normally. Otherwise, the Manipulator may hit the peripheral equipment since the operating trajectory while the robot system stops is different from that in normal operation. It may also result in short life of the reduction gear unit due to the shock or the electromagnetic brake due to the worn friction plate.
To place the system in emergency mode during normal operation, press the Emergency Stop switch when the Manipulator is not moving.
Refer to the Controller manual for instructions on how to wire the Emergency Stop switch circuit.

Do not press the Emergency Stop switch unnecessarily while the Manipulator is operating. Pressing the switch during the operation makes the brakes work. This will shorten the life of the brakes due to the worn friction plates.
Normal brake life cycle: About 2 years (when the brakes are used 100 times/day)

Do not turn OFF the Controller while the Manipulator is operating.
If you attempt to stop the Manipulator in emergency situations such as “Safeguard Open”, make sure to stop the Manipulator using the Emergency Stop switch of the Controller.

If the Manipulator is stopped by turning OFF the Controller while it is operating, following problems may occur.
Reduction of the life and damage of the reduction gear unit
Position gap at the joints
In addition, if the Controller was forced to be turned OFF by blackouts and the like while the Manipulator is operating, make sure to check the following points after power restoration.
Whether or not the reduction gear is damaged
Whether or not the joints are in their proper positions

If there is a position gap, perform calibration by referring to the *Maintenance 13. Calibration* in this manual.

Before using the Emergency Stop switch, be aware of the followings.
- The Emergency Stop (E-STOP) switch should be used to stop the Manipulator only in case of emergencies.
- To stop the Manipulator operating the program except in emergency, use Pause (halt) or STOP (program stop) commands.
  Pause and STOP commands do not turn OFF the motors. Therefore, the brake does not function.
- For the Safeguard system, do not use the circuit for E-STOP.

For details of the Safeguard system, refer to the following manuals.

EPSON RC+ User's Guide *2. Safety - Installation and Design Precautions - Safeguard System*

Safety and Installation *2.6 Connection to EMERGENCY Connector*

To check brake problems, refer to the following manuals.

Manipulator Manual Maintenance

2.1.2 Inspection Point - Inspection While the Power is ON (Manipulator is operating)

Safety and Installation

RC180: *5.1.1 Manipulator - Inspection While the Power is ON (Manipulator is operating)*

RC620: *5.2.2 Manipulator - Inspection While the Power is ON (Manipulator is operating)*

Free running distance in emergency

The operating Manipulator cannot stop immediately after the Emergency Stop switch is pressed.

The free running time, angle, and distance of the Manipulator are shown below.

However, remember that the values vary depending on following conditions.

Weight of the end effector Weight of work piece Operating pose

Weight Speed Accel etc.

Conditions for Measurement

Accel Setting	100
Speed Setting	100
Load [kg]	6
Weight Setting	6

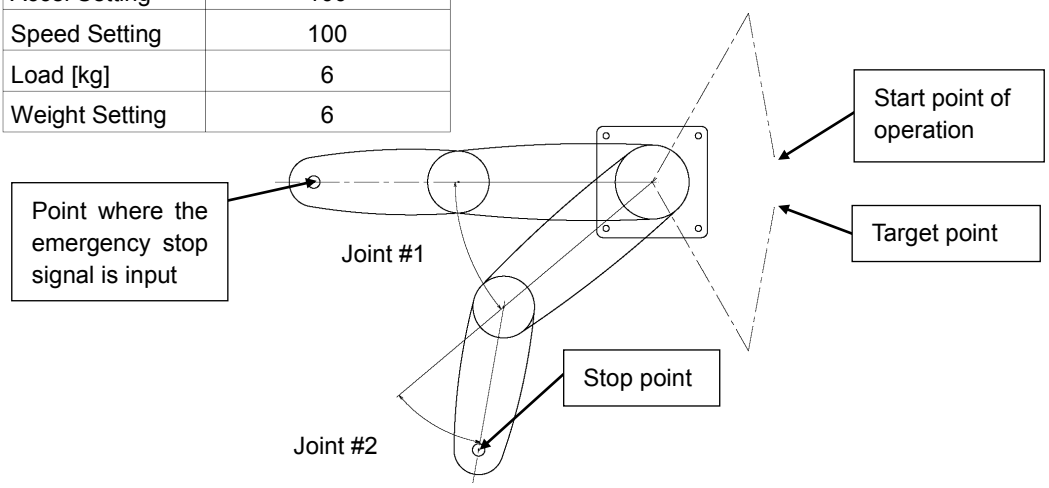

		Controller	RC180, RC620		
		Manipulator	G6-45***	G6-55***	G6-65***
Free running time	Joint #1 + Joint #2	[s]	0.6	0.7	0.8
	Joint #3	[s]	0.4	0.4	0.4
Free running angle	Joint #1	[deg]	35	45	55
	Joint #2	[deg]	60	60	65
	Joint #1 + Joint #2	[deg]	100	110	120
Free running distance	Joint #3 G6-**1**	[mm]	40	40	40
	G6-**3**		80	80	80

1.4.2 RC700-A

If the Manipulator moves abnormally during operation, immediately press the Emergency Stop switch. Pressing the Emergency Stop switch immediately changes the manipulator to deceleration motion and stops it at the maximum deceleration speed.

However, avoid pressing the Emergency Stop switch unnecessarily while the Manipulator is running normally. Pressing the Emergency Stop switch locks the brake and it may cause wear on the friction plate of the brake, resulting in the short life of the brake.

Normal brake life cycle: About 2 years (when the brakes are used 100 times/day)

To place the system in emergency mode during normal operation, press the Emergency Stop switch when the Manipulator is not moving.

Refer to the Controller manual for instructions on how to wire the Emergency Stop switch circuit.

Do not turn OFF the Controller while the Manipulator is operating.

If you attempt to stop the Manipulator in emergency situations such as “Safeguard Open”, make sure to stop the Manipulator using the Emergency Stop switch of the Controller.

If the Manipulator is stopped by turning OFF the Controller while it is operating, following problems may occur.

Reduction of the life and damage of the reduction gear unit

Position gap at the joints

In addition, if the Controller was forced to be turned OFF by blackouts and the like while the Manipulator is operating, make sure to check the following points after power restoration.

Whether or not the reduction gear is damaged

Whether or not the joints are in their proper positions

If there is a position gap, perform calibration by referring to the *Maintenance 13. Calibration* in this manual.

Before using the Emergency Stop switch, be aware of the followings.

- The Emergency Stop (E-STOP) switch should be used to stop the Manipulator only in case of emergencies.
- To stop the Manipulator operating the program except in emergency, use Pause (halt) or STOP (program stop) commands.
  Pause and STOP commands do not turn OFF the motors. Therefore, the brake does not function.
- For the Safeguard system, do not use the circuit for E-STOP.

For details of the Safeguard system, refer to the following manuals.

EPSON RC+ User’s Guide *2. Safety - Installation and Design Precautions - Safeguard System*

Safety and Installation *2.6 Connection to EMERGENCY Connector*

To check brake problems, refer to the following manuals.

Manipulator Manual Maintenance

2.1.2 Inspection Point - Inspection While the Power is ON (Manipulator is operating)

Safety and Installation

5.1.1 Manipulator

- Inspection While the Power is ON (Manipulator is operating)

Free running distance in emergency

The operating Manipulator cannot stop immediately after the Emergency Stop switch is pressed.

The free running time, angle, and distance of the Manipulator are shown below.

However, remember that the values vary depending on following conditions.

Weight of the end effector Weight of work piece Operating pose

Weight Speed Accel etc.

Conditions for Measurement

Accel Setting	100
Speed Setting	100
Load [kg]	6
Weight Setting	6

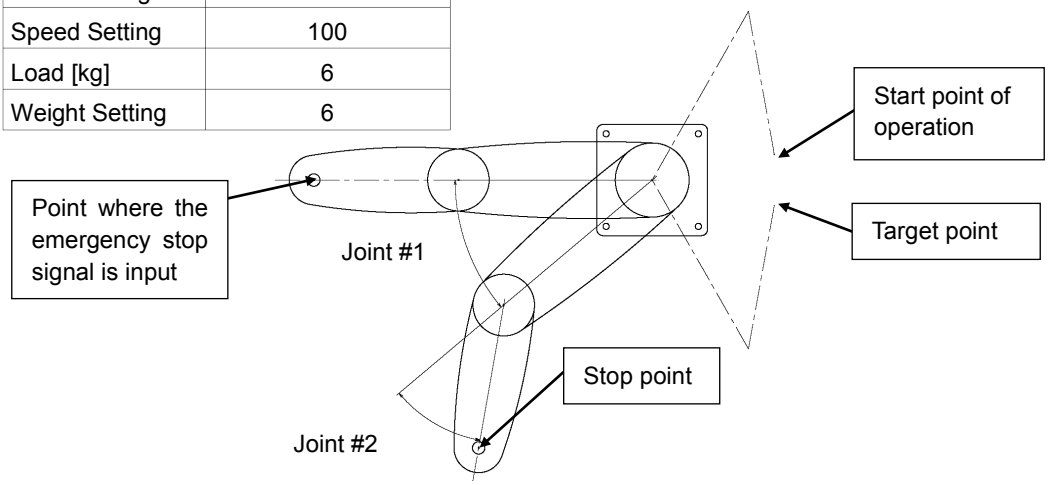

	Controller	RC700-A		
	Manipulator	G6-45***	G6-55***	G6-65***
Free running time	Joint #1 + Joint #2 [s]	0.5	0.5	0.5
	Joint #3 [s]	0.4	0.4	0.4
Free running angle	Joint #1 [deg]	35	30	35
	Joint #2 [deg]	70	55	70
	Joint #1 + Joint #2 [deg]	105	85	105
Free running distance	Joint #3 G6-**1** G6-**3** [mm]	95	95	95

1.5 Emergency Movement Without Drive Power

When the system is placed in emergency mode, push the arm or joint of the Manipulator by hand as shown below:

Arm #1	Push the arm by hand.
Arm #2	Push the arm by hand.
Joint #3	The joint cannot be moved up/down by hand until the electromagnetic brake applied to the joint has been released. Move the joint up/down while pressing the brake release switch.
Joint #4	For G6-**1**, Rotate the shaft by hand. For G6-**3**, The shaft cannot be rotated by hand until the electromagnetic brake applied to the shaft has been released. Move the shaft while pressing the brake release switch.

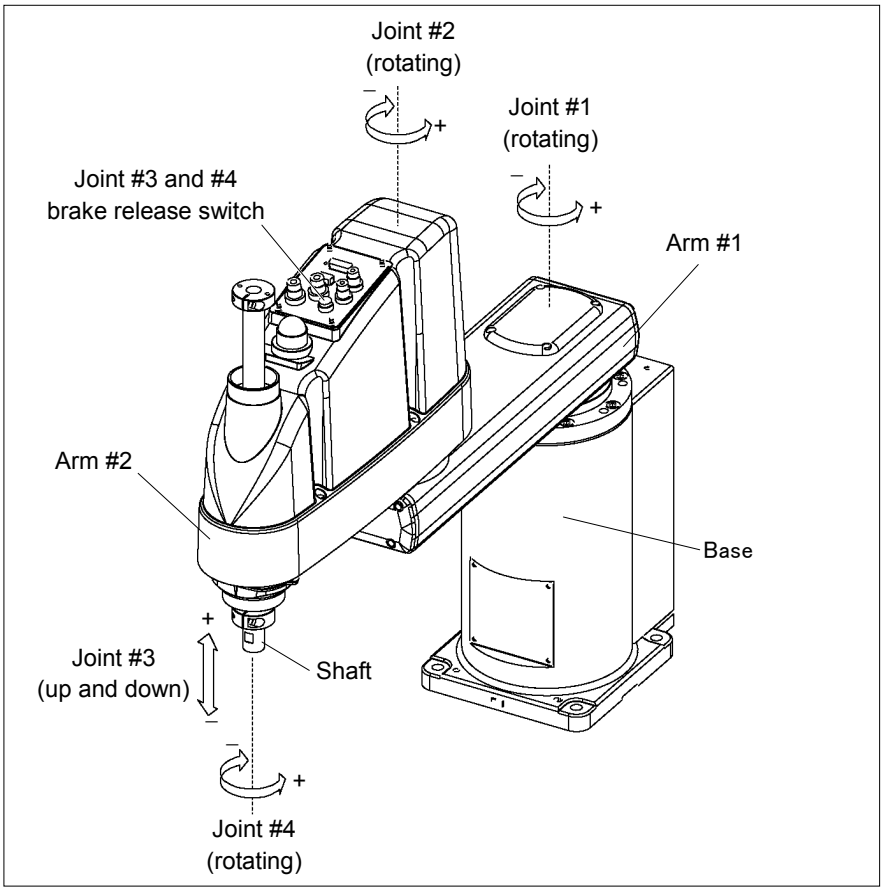

NOTE

The brake release switch affects both Joints #3 and #4. When the brake release switch is pressed in emergency mode, the brakes for both Joints #3 and #4 are released simultaneously. (For G6-**1**, Joint #4 has no brake on it.)

Be careful of the shaft falling and rotating while the brake release switch is pressed because the shaft may be lowered by the weight of an end effector.

1.6 ACCELS Setting for CP Motions

To make the Manipulator move in CP motion, see the following and set ACCELS properly according to the tip load and the Z-axis height.

NOTE ☞ Improper setting may cause following problems.

Reduction of the life and damage of the ball screw spline

Set ACCELS as follows according to the Z-axis height.

ACCELS setting value by Z-axis position and tip load

Z position (mm)	Tip load		
	2 kg or less	4 kg or less	6 kg or less
0 > Z > = - 100	25000 or less	25000 or less	17000 or less
- 100 > Z > = - 200		15000 or less	10000 or less
- 200 > Z > = - 330		10000 or less	6500 or less

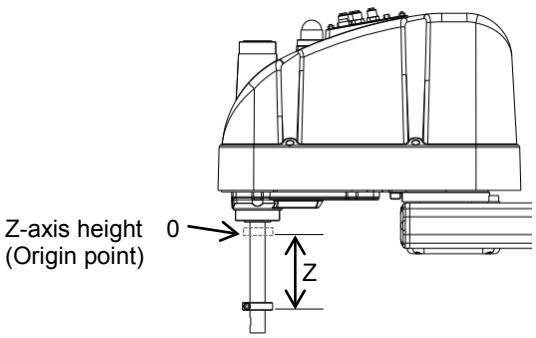

If the Manipulator is operated in CP motion with the wrong set values, make sure to check the following point.

Whether the ball screw spline shaft is deformed or bent

1.7 Warning Labels

The Manipulator has the following warning labels.

The warning labels are attached around the locations where specific dangers exist.
Be sure to comply with descriptions and warnings on the labels to operate and maintain the Manipulator safely.
Do not tear, damage, or remove the warning labels. Use meticulous care when handling those parts or units to which the following warning labels are attached as well as the nearby areas.

Location	Warning Label	NOTE
A	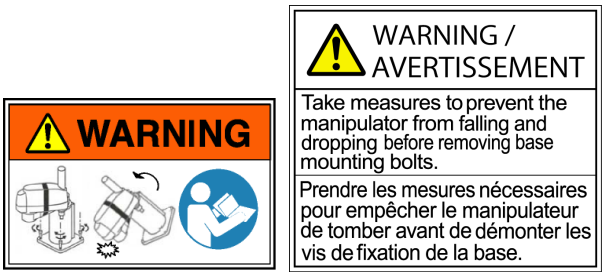	Before loosening the base mounting screws, hold the arm and secure it tightly with a band to prevent hands or fingers from being caught in the Manipulator.
B	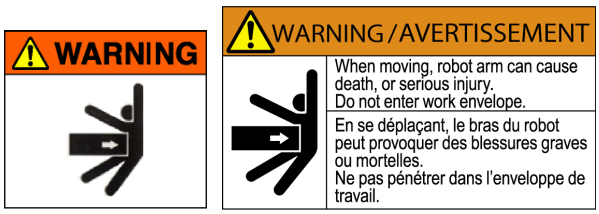	
C		Hazardous voltage exists while the Manipulator is ON. To avoid electric shock, do not touch any internal electric parts.
D		You can catch your hand or fingers between the shaft and cover when bringing your hand close to moving parts. * Manipulators with bellows do not have this label for no danger of your hand or fingers being caught.
E		Be careful of the hand falling while the brake release switch is being pressed.
F	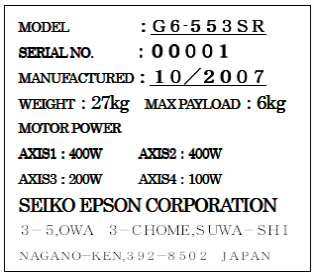	

Location	Warning Label	NOTE
G	Air pressure max. 0.59Mpa, 86psi	
H	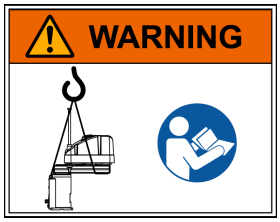 WARNING / AVERTISSEMENT Follow instructions manual during lifting and transportation. Respecter les instructions du manuel d' utilisation pendant le levage et le transport.	Only authorized personnel should perform sling work and operate a crane and a forklift. When these operations are performed by unauthorized personnel, it is extremely hazardous and may result in serious bodily injury and/or severe equipment damage to the robot system.

Table Top Mounting
G6-***S

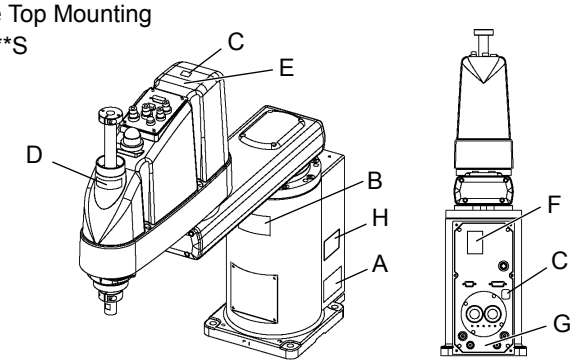

Ceiling Mounting
G6-***SR

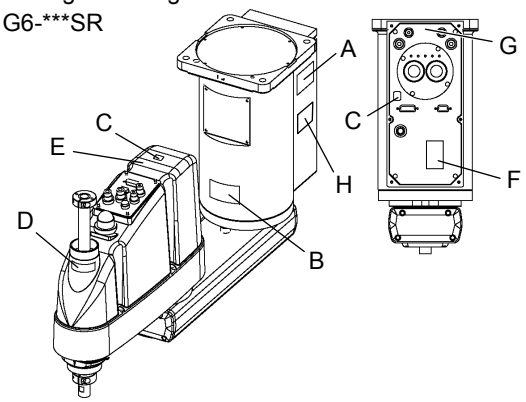

Wall Mounting
G6-***SW

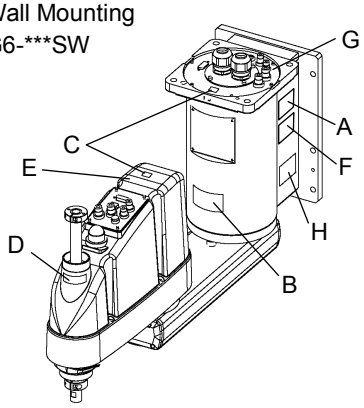

2. Specifications

2.1 Features of G6 series Manipulators

The G6 series Manipulators are high-performance manipulators intended to achieve high speed, high accuracy, space saving, and high cost-performance. The features of the G6 series Manipulators are as follows:

Compatibility with E2 series Manipulators

The installation procedure and mounting dimensions of the end effector for the G6 series are compatible with those for the E2 series.

Space Saving

Compactness achieved by using a ductless design.

Motion Range Extended

The motion range of the G6 series manipulator has been extended by 20% compared to E2S.

Improved Productivity

The numbers of user wires and pneumatic tubes have been increased.
The speed of Joints #1, 2, 3, and 4 has been enhanced.
Cycle time has been improved.

Increased Load Capacity

The load capacity has been increased up to a maximum 6 kg to handle greater work load.

Various Types Available

2.2 Model Number and Model Differences

G6-45 1 S □ -UL

UL specification

UL	: UL compliant
□	: Non UL compliant

Type

□	: Table Top mounting
W	: Wall mounting
R	: Ceiling mounting

Environment

S	: Standard
C	: Clean room & ESD
D	: Protected : IP 54 (with bellows option)
P	: Protected : IP 65

Joint #3 stroke

1	: 180 mm (G6-***S*, D*) 150 mm (G6-***C*, P*, D* bellows option)
3	: 330 mm (G6-***S*, D*) 300 mm (G6-***C*, P*, D* bellows option)

Arm length

45	: 450 mm
55	: 550 mm
65	: 650 mm

Environment

Cleanroom-model

Cleanroom-model Manipulator includes additional features that reduce dust emitted by the Manipulator to enable use in clean room environments.

Protected-model (IP54, IP65)

The Protected-model Manipulators operate under adverse conditions with dust and oily smoke.

G6-***D*

Normal G6-***D* Manipulators do not have bellows. The normal G6-***D* Manipulator (without bellows option) operates under adverse conditions with oily mist.

If necessary, select the bellows option at shipment.

The Manipulators with bellows (option) comply with grade of protection IP54 (IEC 60529, JIS C0920).

G6-***P*

G6-***P* Manipulators comply with grade of protection IP65 (IEC 60529, JIS C0920).

For details on the specifications, refer to *Setup & Operation: 2.4 Specifications*.

2.3 Part Names and Outer Dimensions

2.3.1 Table Top Mounting

Standard-model G6-***S

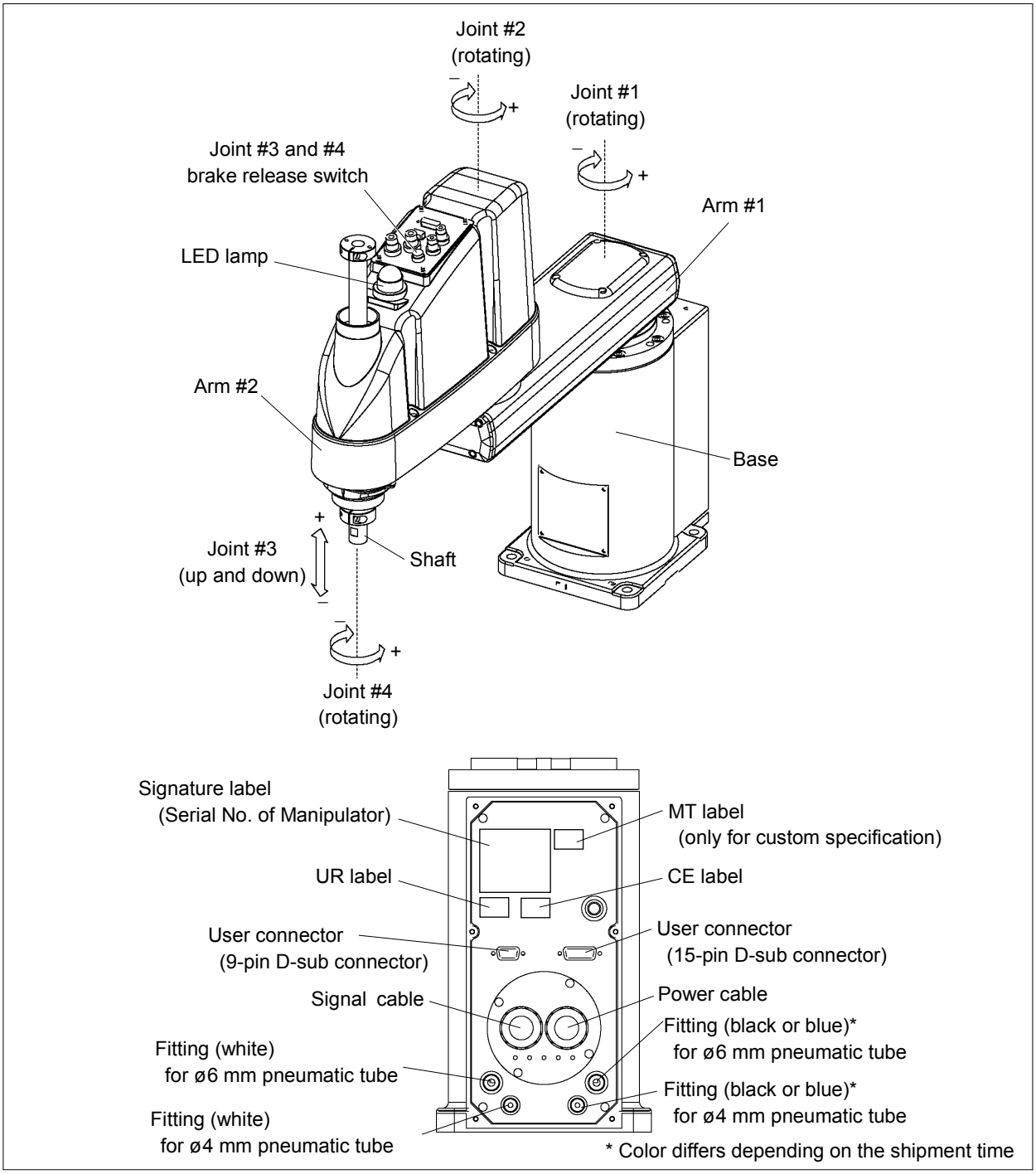

NOTE

- The brake release switch affects both Joints #3 and #4. When the brake release switch is pressed in emergency mode, the brakes for both Joints #3 and #4 are released simultaneously. (For G6-**1**, Joint #4 has no brake on it.)
- While the LED lamp is on, the current is being applied to the manipulator. Performing any work with the power ON is extremely hazardous and it may result in electric shock and/or improper function of the robot system. Make sure to turn OFF the controller power before the maintenance work.

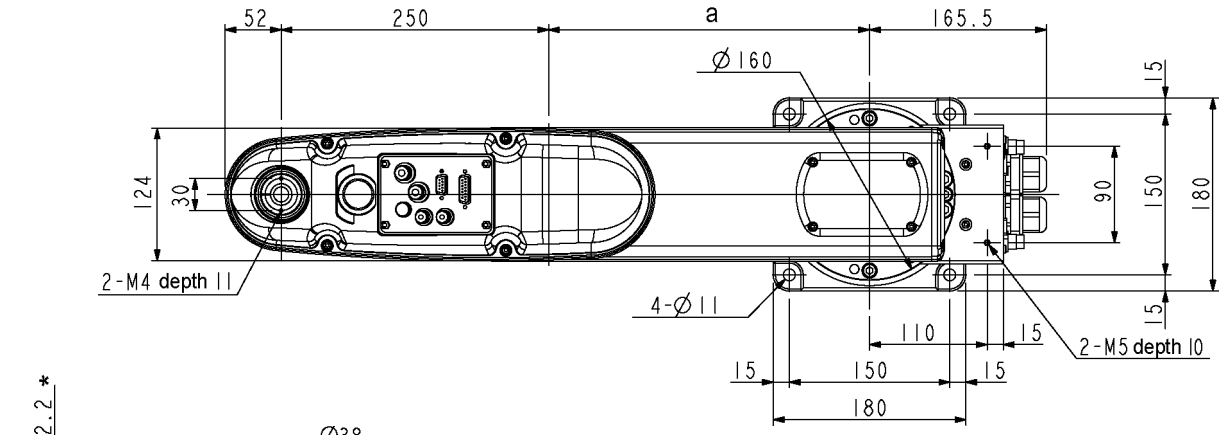

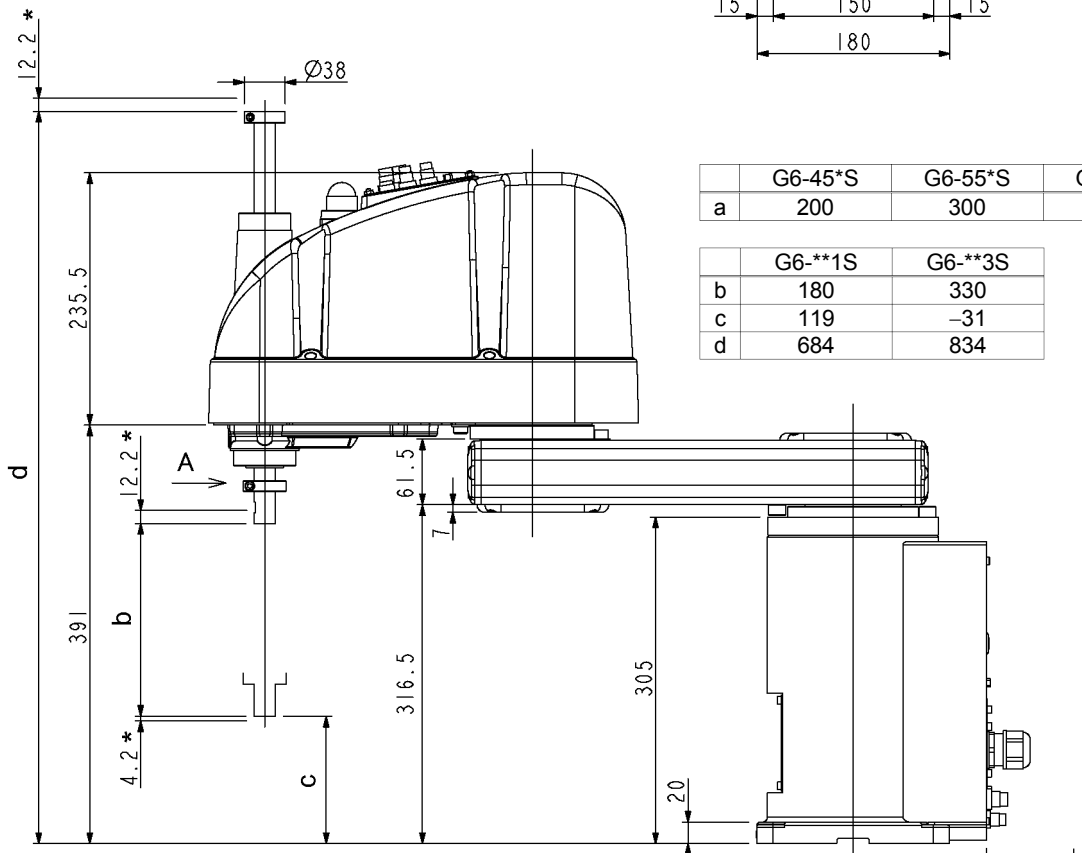

	G6-45*S	G6-55*S	G6-65*S
a	200	300	400

	G6-**1S	G6-**3S
b	180	330
c	119	–31
d	684	834

(*) indicates the stroke margin by mechanical stop.

90 or more
Space for cables

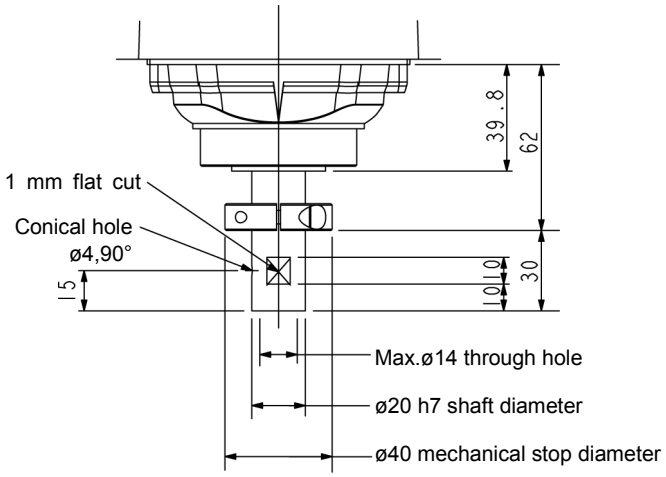

Detail of “A”
(Calibration point position of Joints #3 and #4)

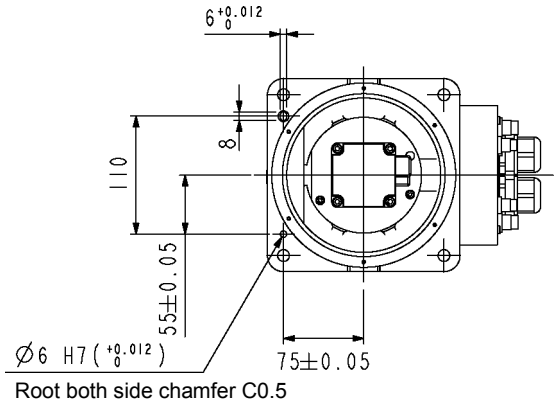

Reference through hole
(View from the bottom of the base)

Cleanroom-model G6-***C

The following figure shows the additional parts and specifications for the Table Top mounting Cleanroom-model when compared with the Standard-model in appearance.

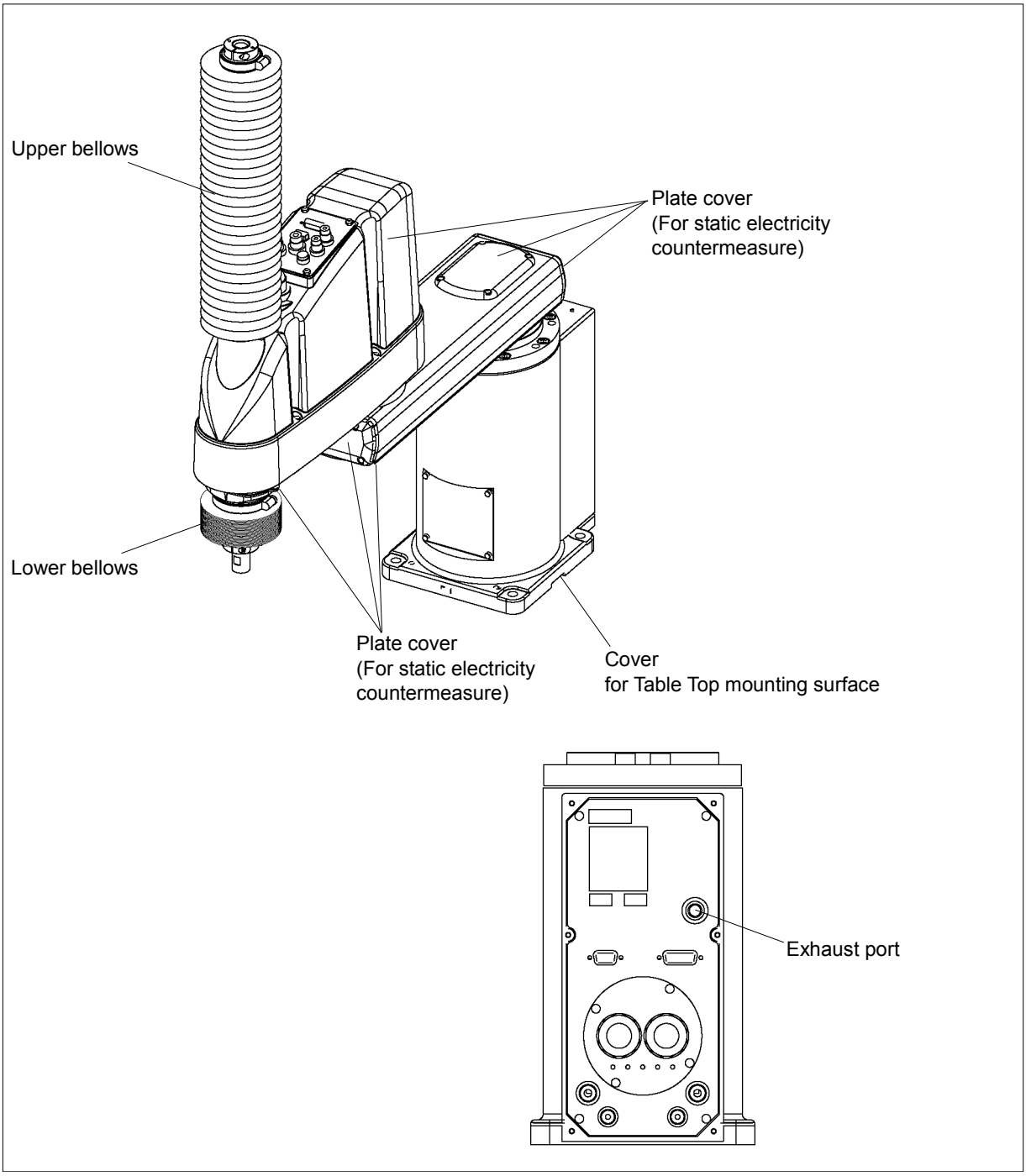

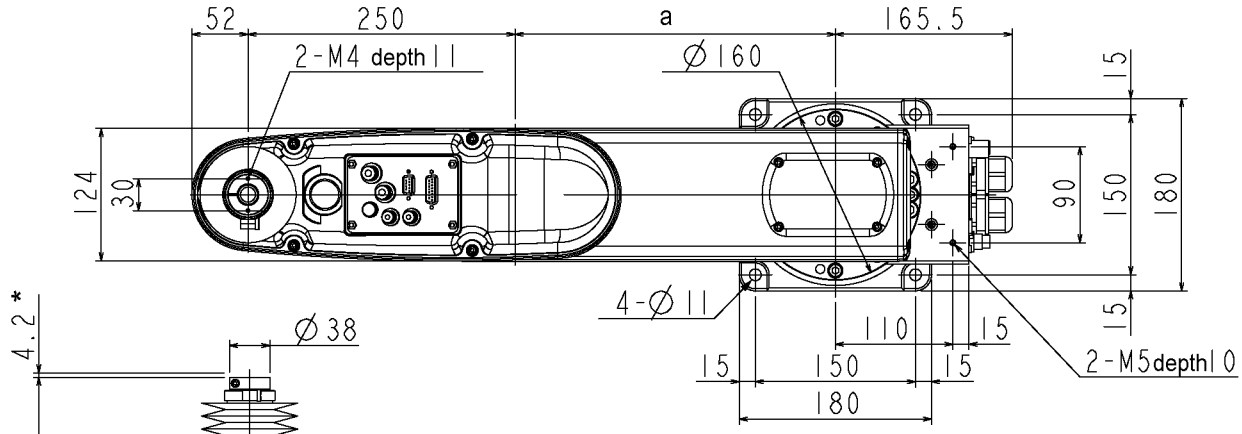

	G6-45*C	G6-55*C	G6-65*C
a	200	300	400

	G6-**1C	G6-**3C
b	150	300
c	116	–34
d	792	942

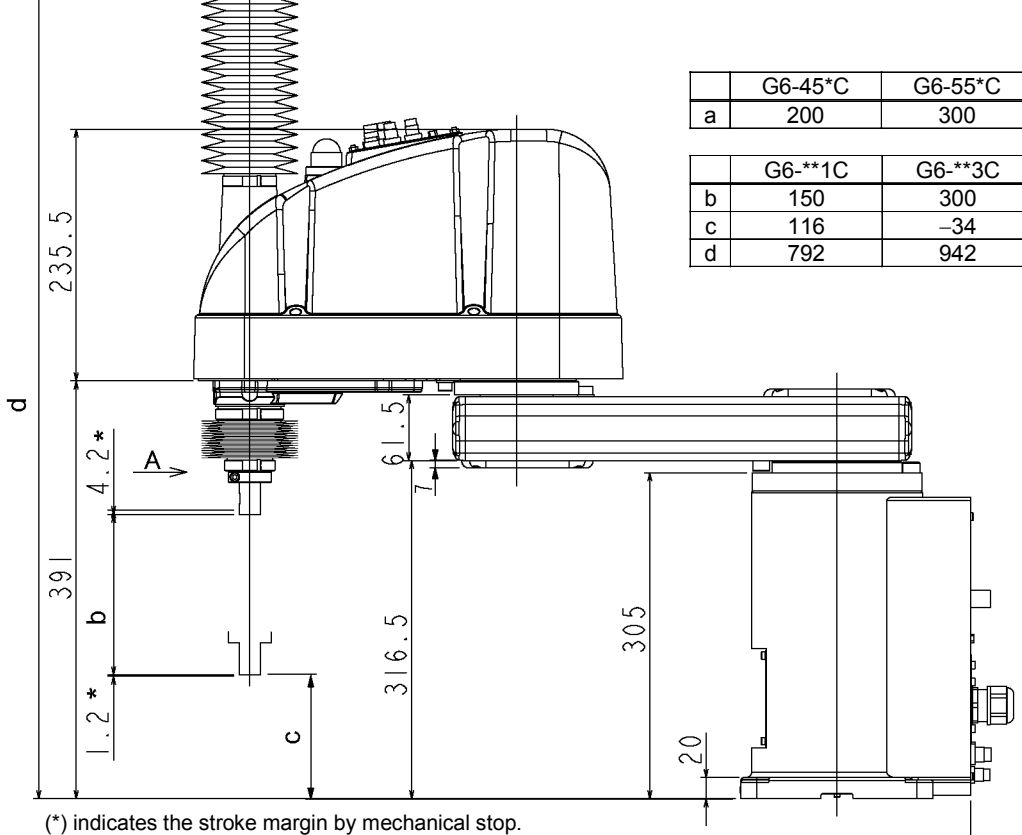

(*) indicates the stroke margin by mechanical stop.

90 or more
Space for cables

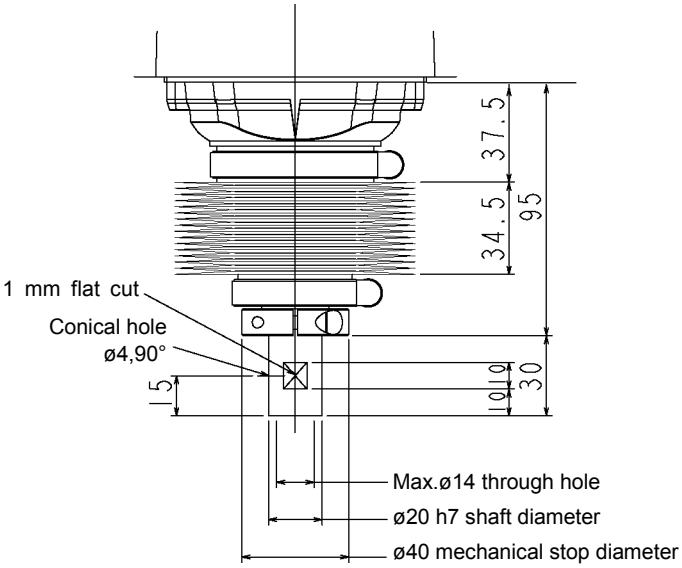

Detail of "A"
(Calibration point position of Joints #3 and #4)

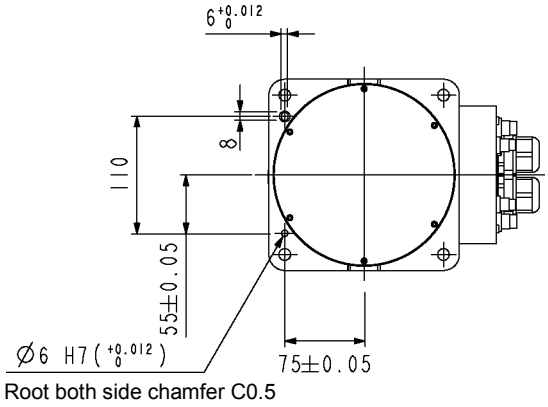

Reference through hole
(View from the bottom of the base)

Protected-model G6-***D/P

The following figure shows the additional parts and specifications for the Table Top mounting Protected-model when compared with the Standard-model in appearance.
Normal G6-***D* Manipulators do not have bellows. If necessary, select the bellows option at shipment. The following figure is a Manipulator with bellows option.
For dimensions of the end part of G6-***D* without bellows option, refer to G6-***S.

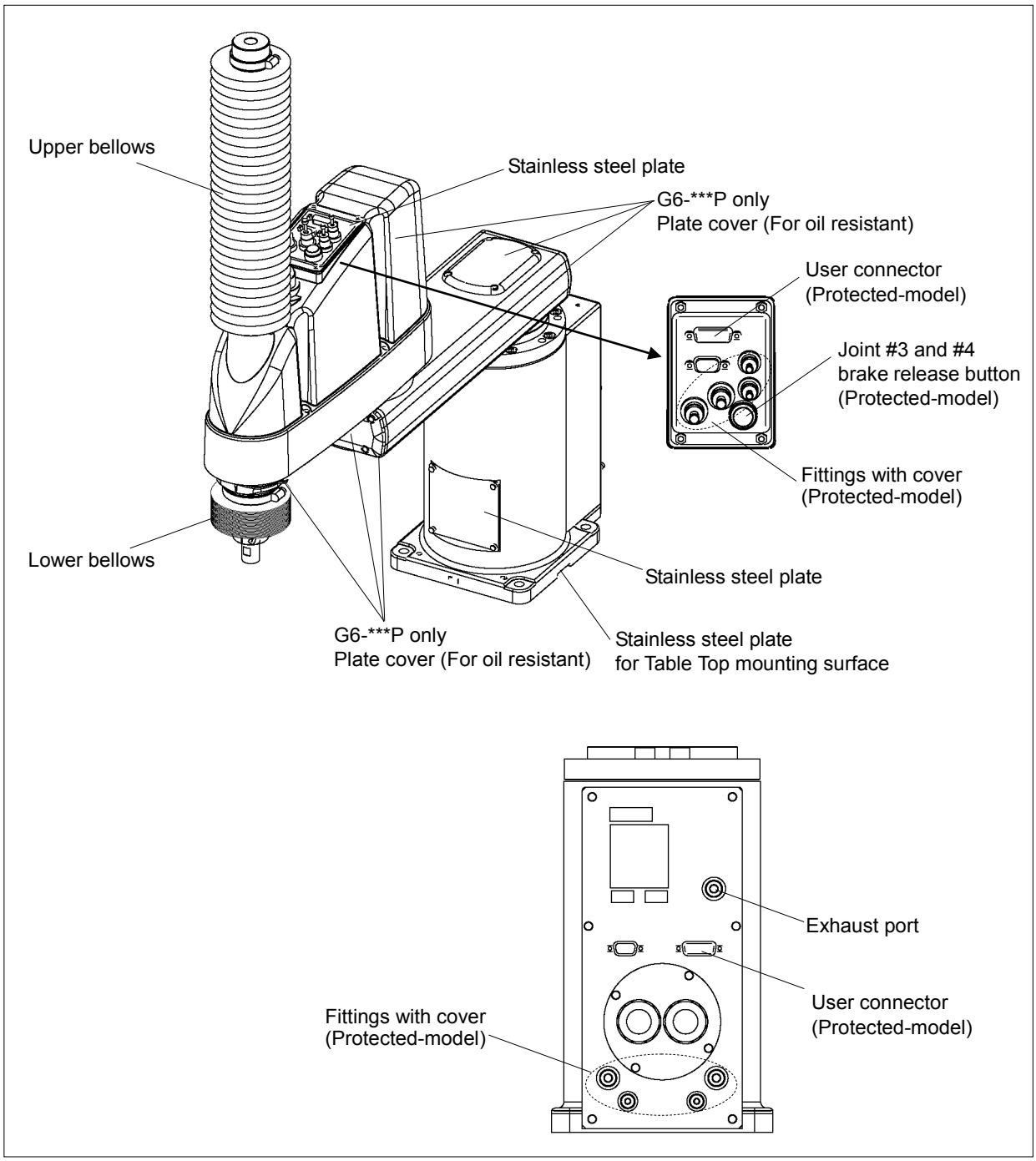

NOTE ☞ For Protected-model, all the screws used for outer parts are stainless steel screws. (Excluding the screw used for mechanical stop.)

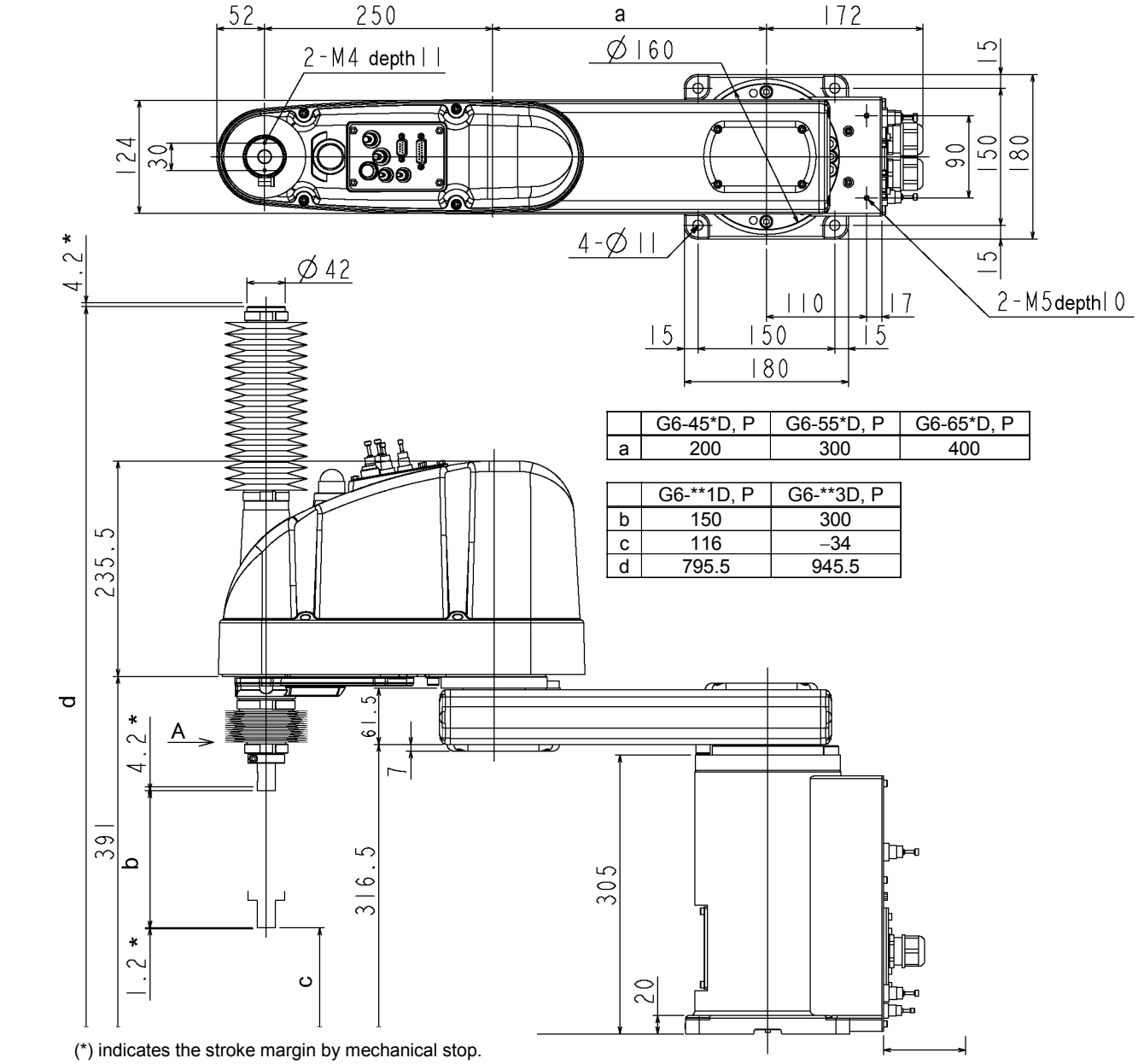

	G6-45*D, P	G6-55*D, P	G6-65*D, P
a	200	300	400

	G6-**1D, P	G6-**3D, P
b	150	300
c	116	–34
d	795.5	945.5

(*) indicates the stroke margin by mechanical stop.

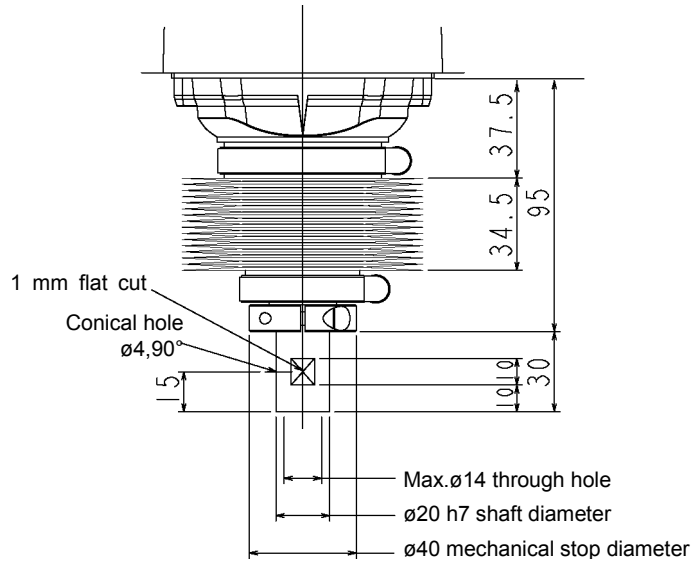

Detail of "A"
(Calibration point position of Joints #3 and #4)

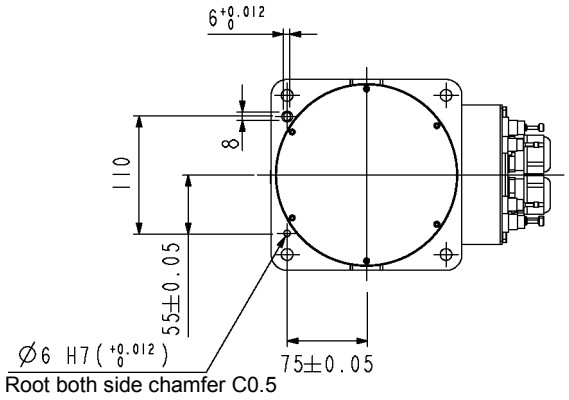

Reference through hole
(View from the bottom of the base)

2.3.2 Wall Mounting

Standard-model G6-***SW

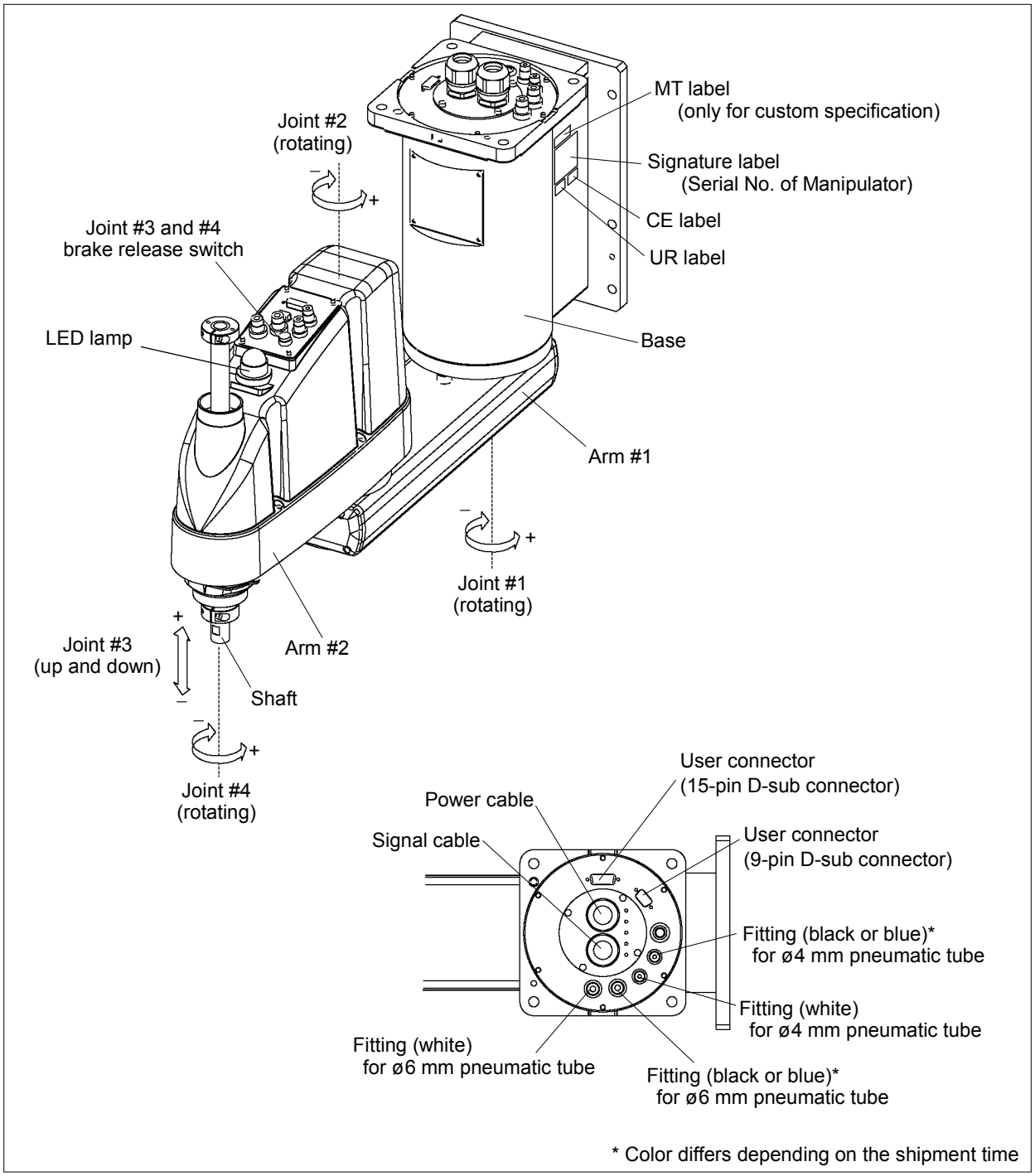

NOTE

- The brake release switch affects both Joints #3 and #4. When the brake release switch is pressed in emergency mode, the brakes for both Joints #3 and #4 are released simultaneously.
  (For G6-**1**, Joint #4 has no brake on it.)
- While the LED lamp is on, the current is being applied to the manipulator. Performing any work with the power ON is extremely hazardous and it may result in electric shock and/or improper function of the robot system. Make sure to turn OFF the controller power before the maintenance work.

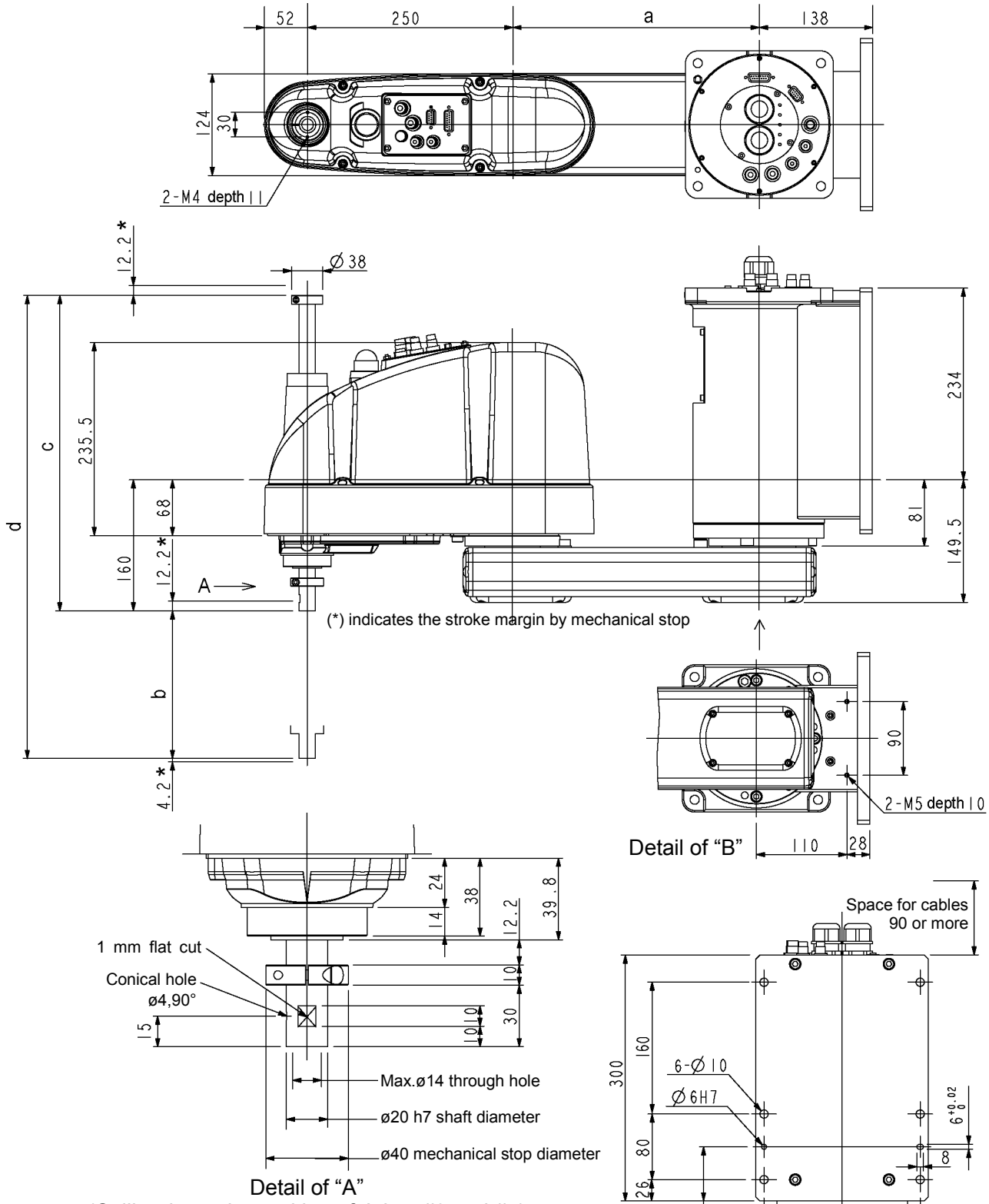

Detail of "A"
(Calibration point position of Joints #3 and #4)

Reference through hole
(View from the bottom of the base)

	G6-45*SW	G6-55*SW	G6-65*SW
a	200	300	400

	G6-**1SW	G6-**3SW
b	180	330
c	-9	141
d	385	535

Cleanroom-model G6-***CW

The following figure shows the additional parts and specifications for the Wall mounting Cleanroom-model when compared with the Standard-model in appearance.

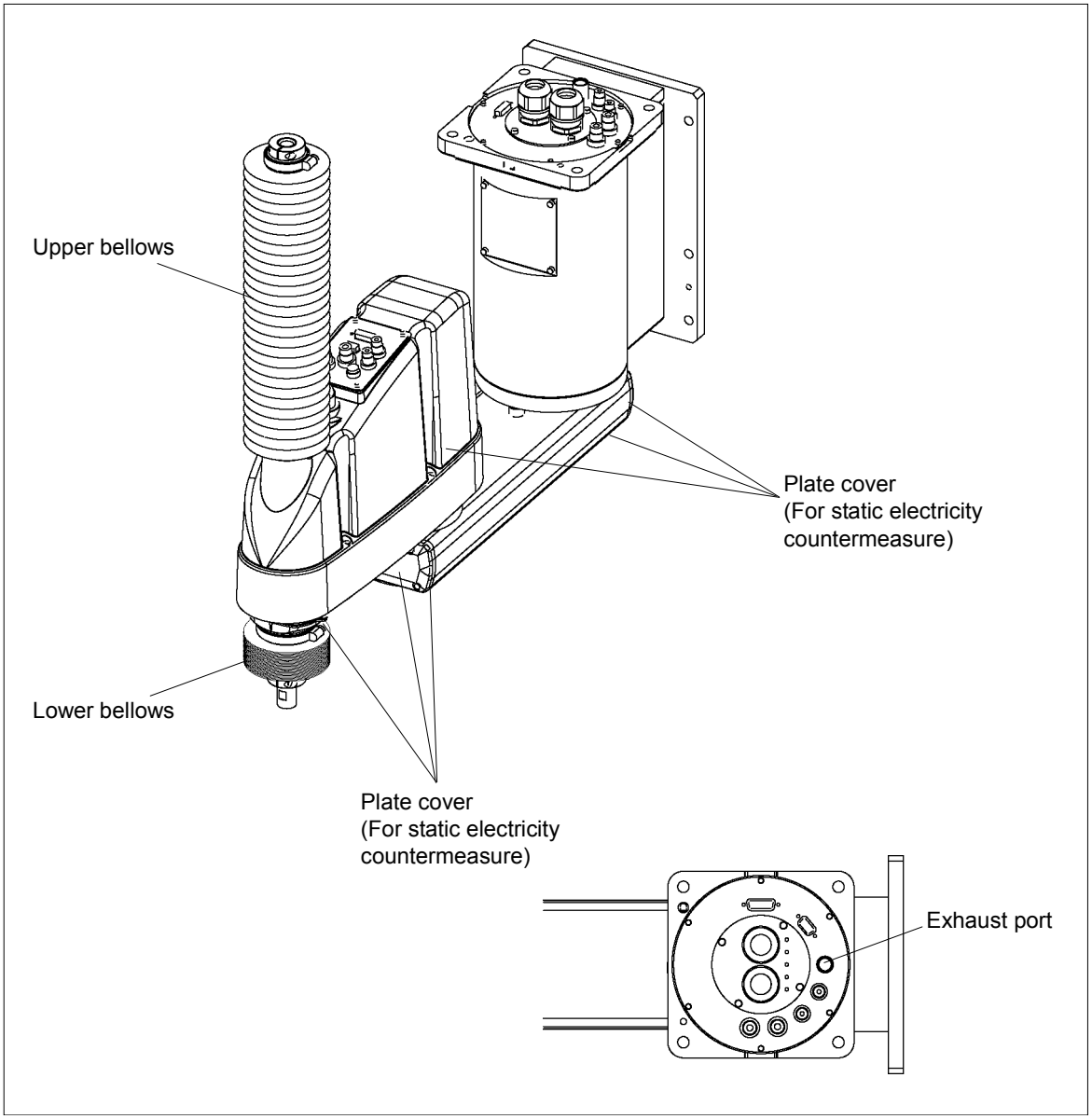

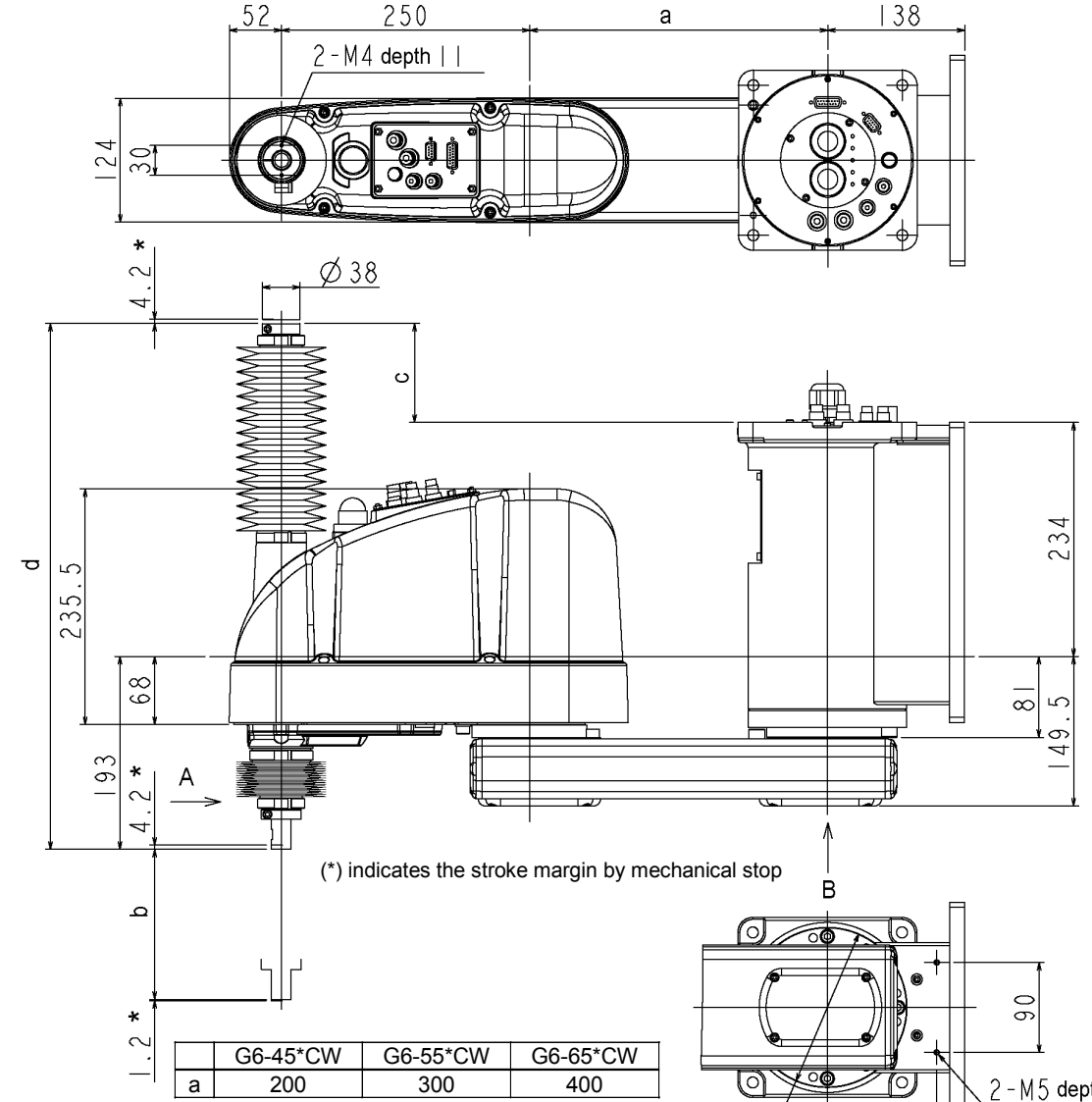

Detail of "B"

	G6-45*CW	G6-55*CW	G6-65*CW
a	200	300	400

	G6-**1CW	G6-**3CW
b	150	300
c	99	249
d	526	676

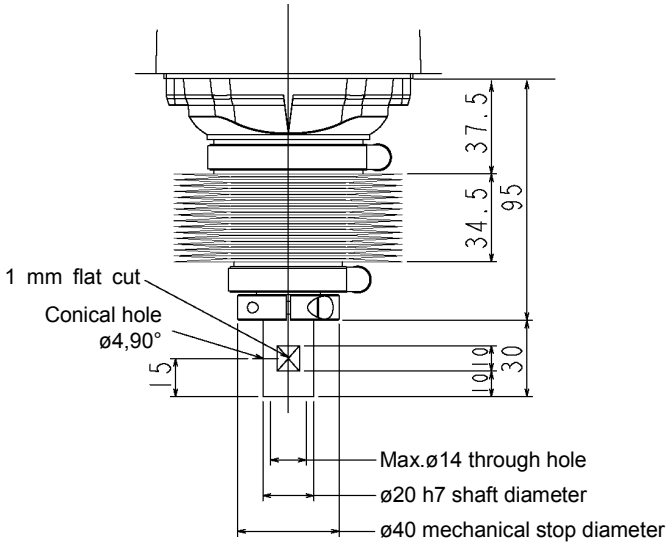

Detail of "A"
(Calibration point position of Joints #3 and #4)

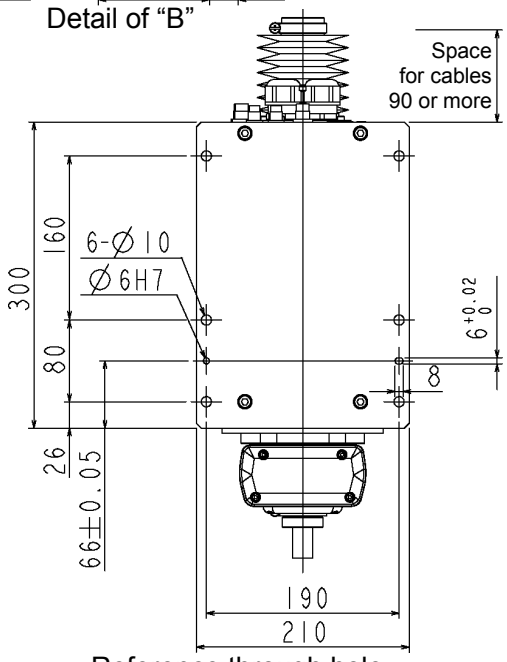

Reference through hole
(View from the bottom of the base)

Protected-model G6-***DW / PW

The following figure shows the additional parts and specifications for the Wall mounting Protected-model when compared with the Standard-model in appearance.

Normal G6-***DW Manipulators do not have bellows. If necessary, select the bellows option at shipment. The following figure is a Manipulator with bellows option.

For dimensions of the end part of G6-***DW without bellows option, refer to G6-***SW.

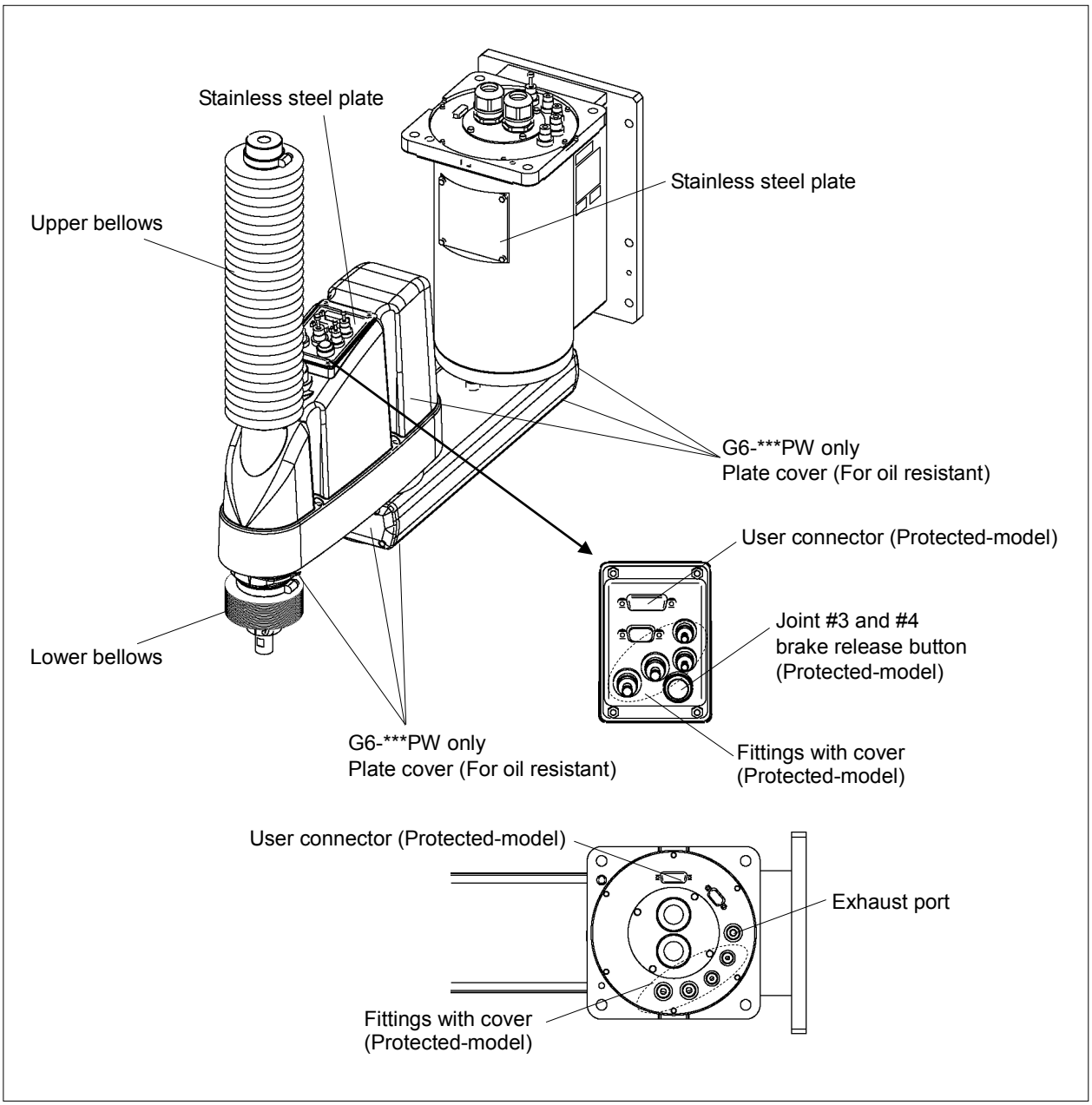

NOTE ☞ For Protected-model, all the screws used for outer parts are stainless steel screws. (Excluding the screw used for mechanical stop.)

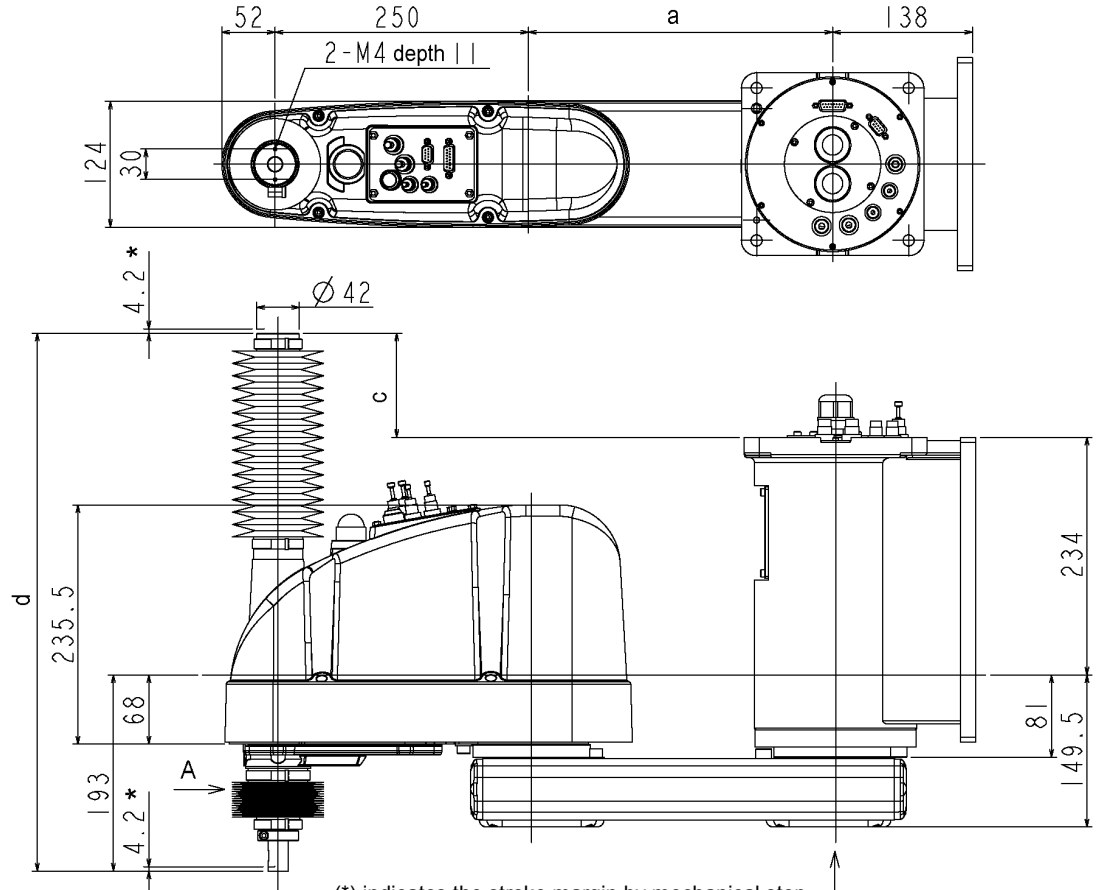

	G6-45*DW, PW	G6-55*DW, PW	G6-65*DW, PW
a	200	300	400

	G6-**1DW, PW	G6-**3DW, PW
b	150	300
c	102.5	252.5
d	529.5	679.5

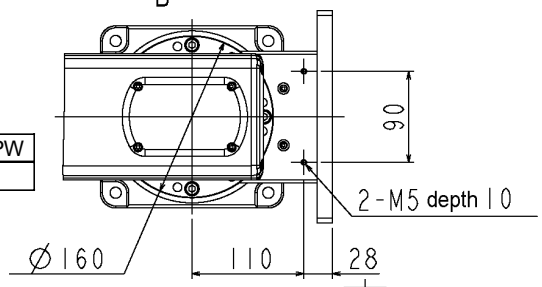

Detail of “B”

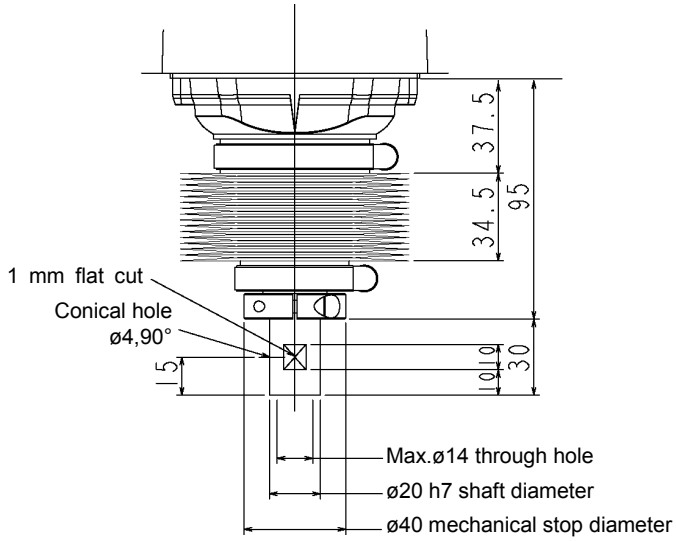

Detail of “A”
(Calibration point position of Joints #3 and #4)

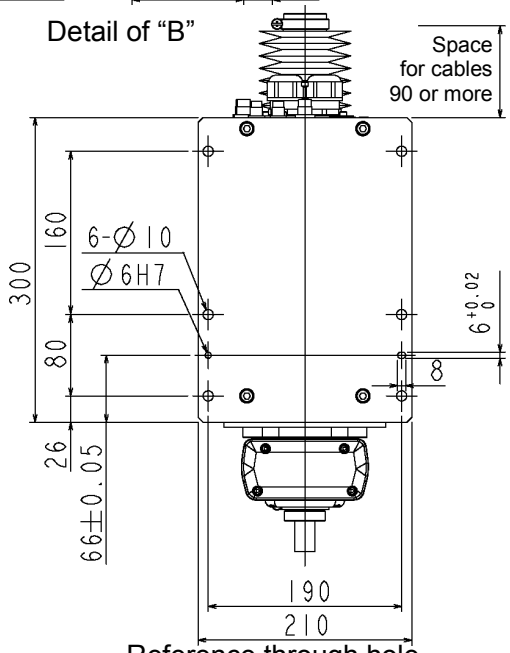

Reference through hole
(View from the bottom of the base)

2.3.3 Ceiling Mounting

Standard-model G6-***SR

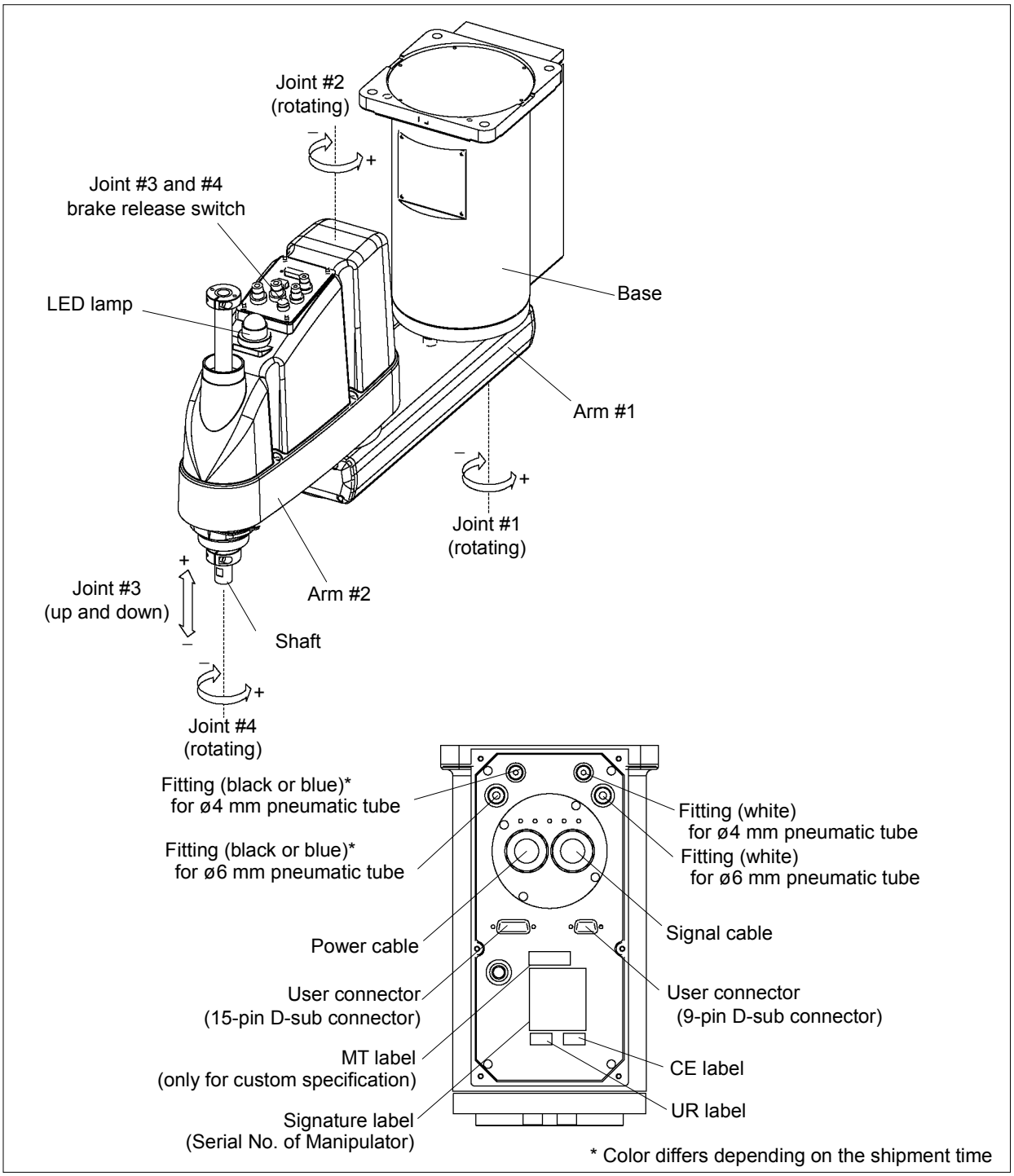

NOTE - The brake release switch affects both Joints #3 and #4. When the brake release switch is pressed in emergency mode, the brakes for both Joints #3 and #4 are released simultaneously.
(For G6-**1**, Joint #4 has no brake on it.)

- While the LED lamp is on, the current is being applied to the manipulator. Performing any work with the power ON is extremely hazardous and it may result in electric shock and/or improper function of the robot system. Make sure to turn OFF the controller power before the maintenance work.

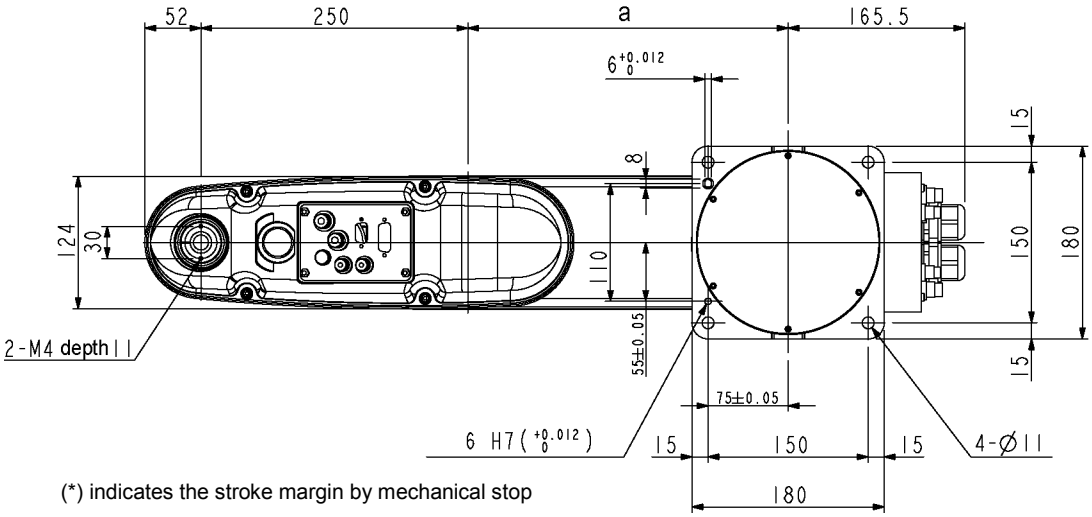

(*) indicates the stroke margin by mechanical stop

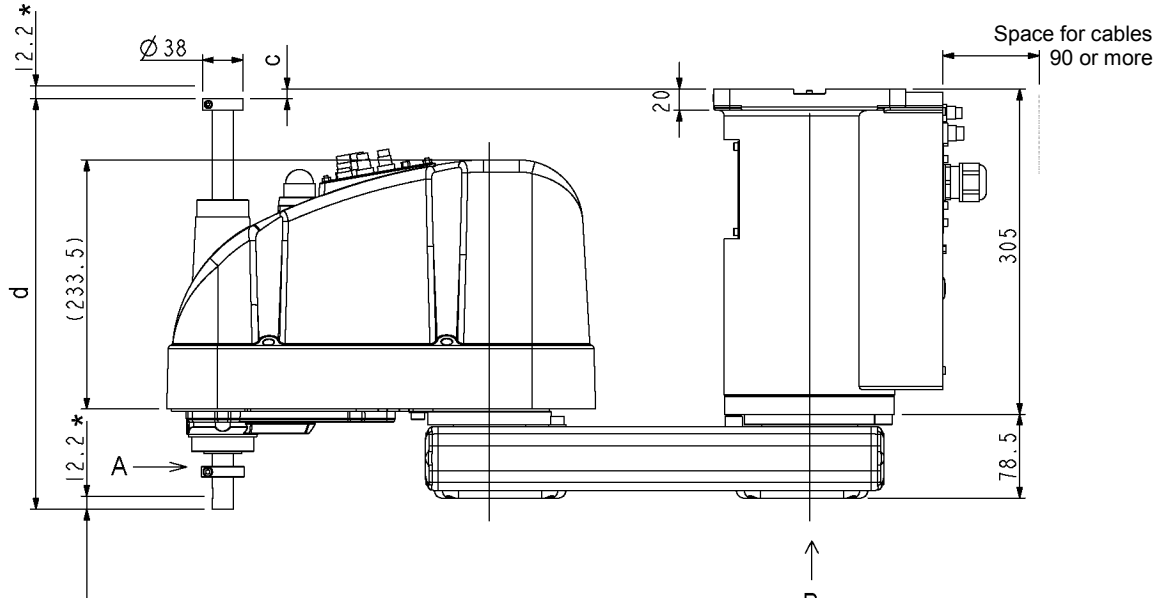

Detail of "B"

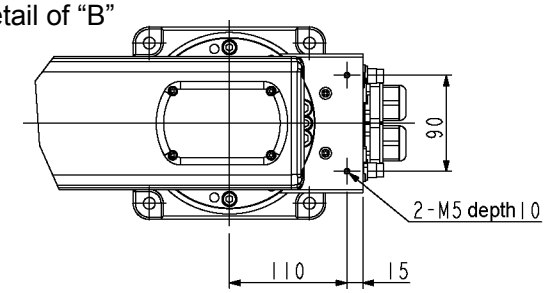

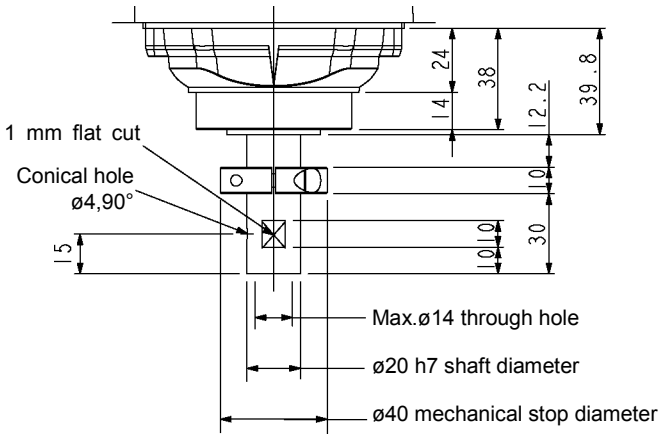

Detail of "A"
(Calibration point position of Joints #3 and #4)

	G6-45*SR	G6-55*SR	G6-65*SR
a	200	300	400

	G6-**1SR	G6-**3SR
b	180	330
c	–9	141
d	385	535

Cleanroom-model G6-***CR

The following figure shows the additional parts and specifications for the Ceiling mounting Cleanroom-model when compared with the Standard-model in appearance.

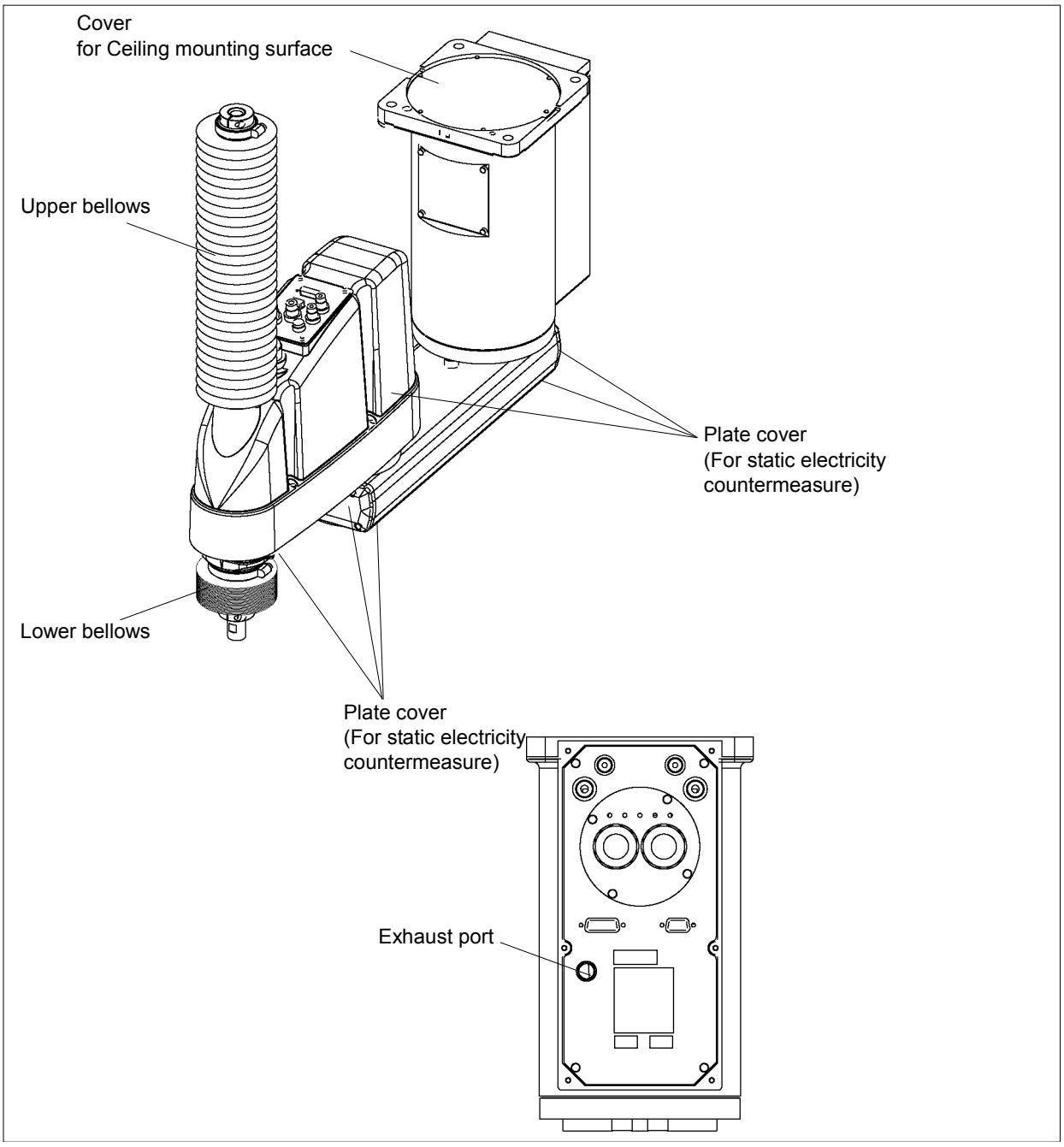

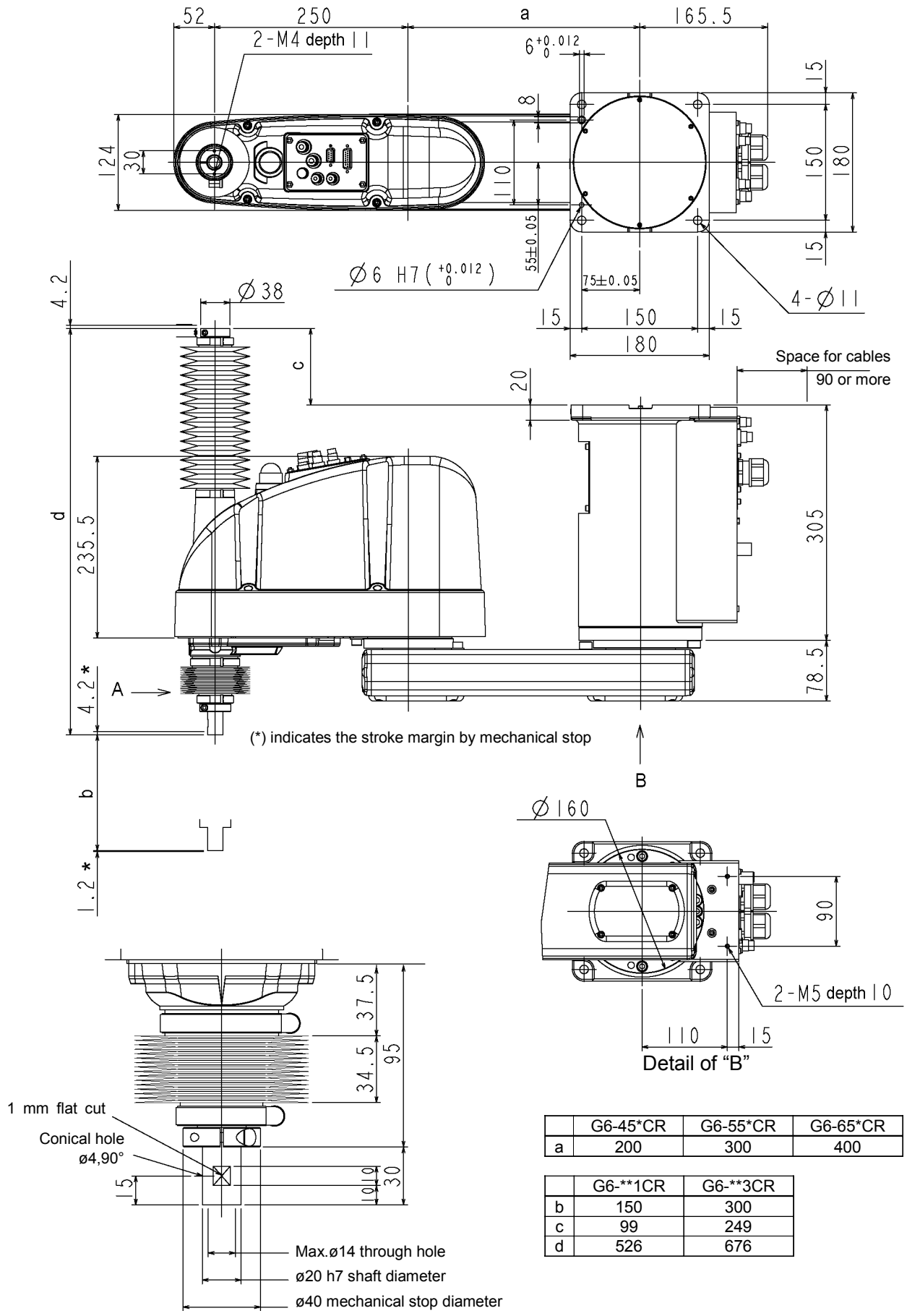

	G6-45*CR	G6-55*CR	G6-65*CR
a	200	300	400

	G6-**1CR	G6-**3CR
b	150	300
c	99	249
d	526	676

Protected-model G6-***DR / PR

The following figure shows the additional parts and specifications for the Ceiling mounting Protected-model when compared with the Standard-model in appearance.

Normal G6-***DR Manipulators do not have bellows. If necessary, select the bellows option at shipment. The following figure is a Manipulator with bellows option.

For dimensions of the end part of G6-***DR without bellows option, refer to G6-***SR.

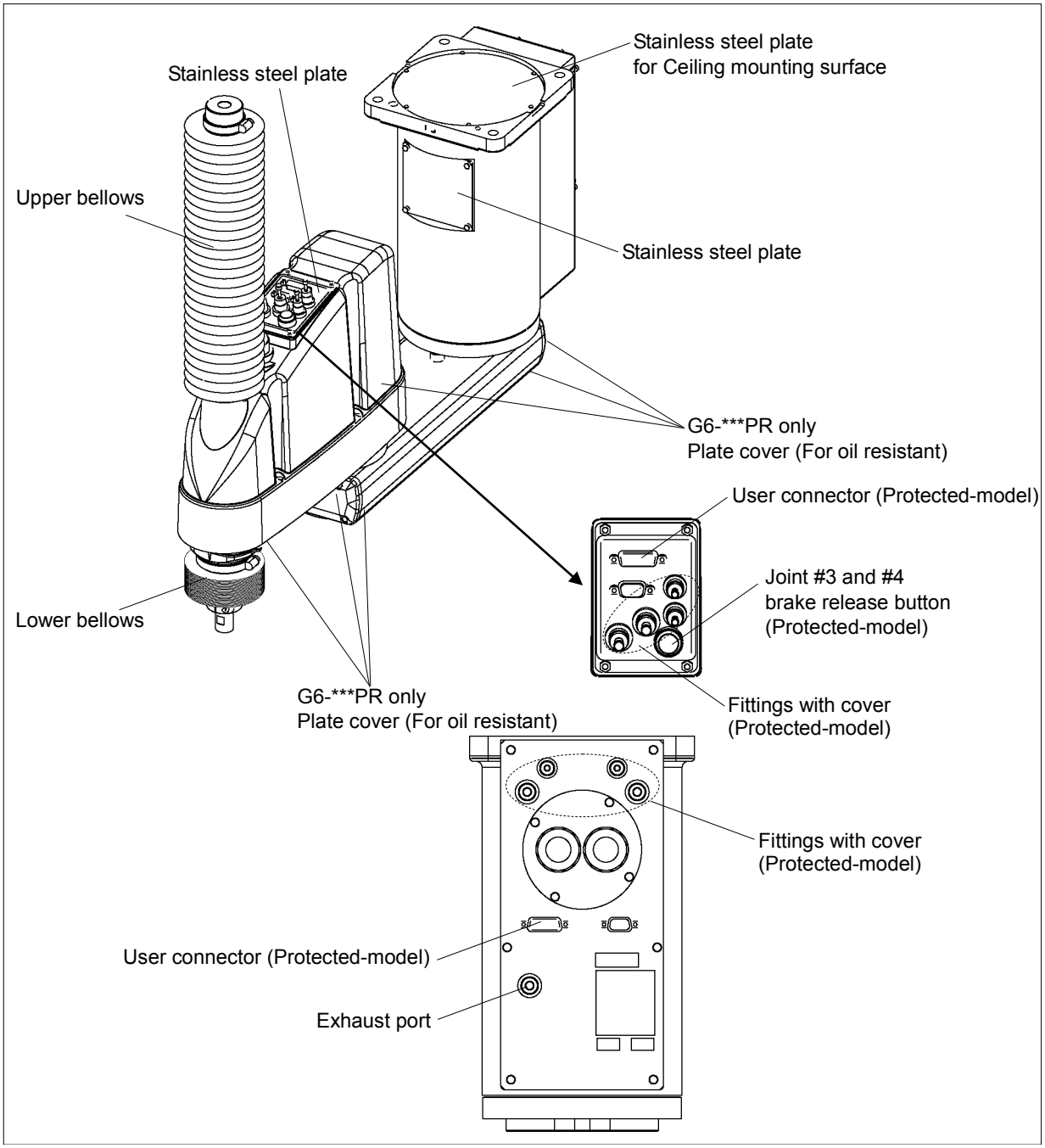

NOTE ☞ For Protected-model, all the screws used for outer parts are stainless steel screws. (Excluding the screw used for mechanical stop.)

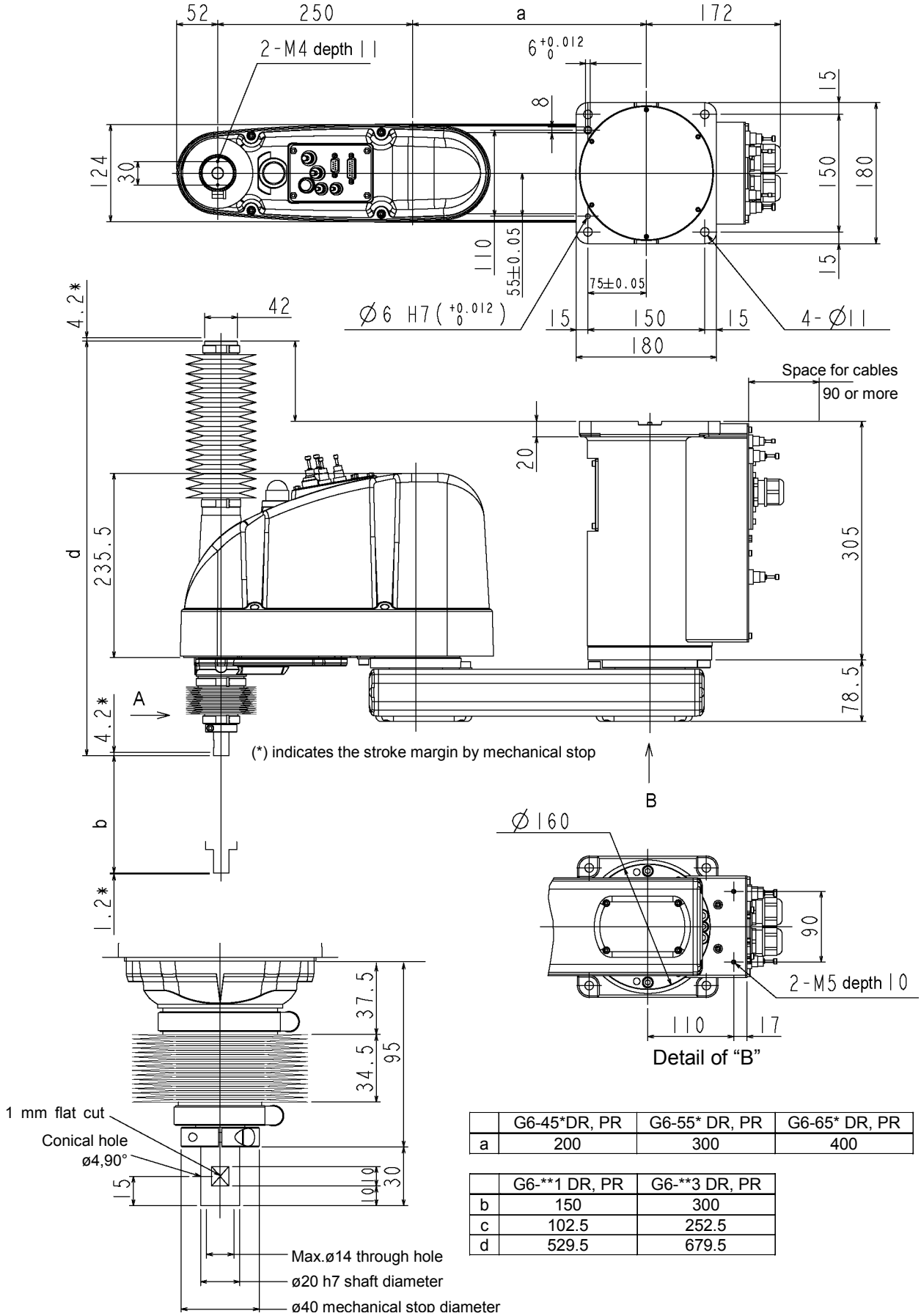

	G6-45*DR, PR	G6-55* DR, PR	G6-65* DR, PR
a	200	300	400

	G6-**1 DR, PR	G6-**3 DR, PR
b	150	300
c	102.5	252.5
d	529.5	679.5

2.4 Specifications

Item			G6-****	G6-****R	G6-****W
Mount method			Table Top	Ceiling	Wall
Environment			Cleanroom-model + ESD *1, Protected-model *2		
Arm length	Arm #1, #2	45	450 mm		
		55	550 mm		
		65	650 mm		
	Arm #3	1	180 mm : G6-**1S*, D* 150 mm : G6-**1C*, P*, D* with bellows option		
		3	330 mm : G6-**3S*, D* 300 mm : G6-**3C*, P*, D* with bellows option		
Weight (not include the weight of cables)		45, 55	27 kg : 60 lb.		29 kg : 64 lb.
		65	28 kg : 62 lb.		29.5 kg : 65 lb.
Driving method	All joints		AC servo motor		
Max. operating speed *3	Joints #1, #2	45	6440 mm/s		
		55	7170 mm/s		
		65	7900 mm/s		
	Joint #3	1	1100 mm/s		
		3	2350 mm/s		
	Joint #4		2400 deg/s		
Repeatability	Joints #1, #2		±0.015 mm		
	Joint #3		±0.010 mm		
	Joint #4		±0.005 deg		
Max. motion range	Joint #1	45	±152 deg	±120 deg	±105 deg
		55		±152 deg	±135 deg
		65			±148 deg
	Joint #2	45	±142 to 147.5 deg *a	±130 deg	
		55	±147.5 deg	±147.5 deg : S	
				±145 deg : C*, P*, D* with bellows option	
		65	±147.5 deg		
	Joint #3	1	180 mm : G6-**1S*, D* 150 mm : G6-**1C*, P*, D* with bellows option		
		3	330 mm : G6-**3S*, D* 300 mm : G6-**3C*, P*, D* with bellows option		
	Joint #4		±360 deg		
Max. pulse range (pulse)	Joint #1	45	−1805881 to +7048761	−873814 to + 6116694	−436907 to +5679787
		55		−1805881 to +7048761	−1310720 to +6553600
		65			−1689373 to +6932253
	Joint #2	45	±2585031 to 2685156 *a	±2366578	
		55	±2685156	±2685156 : S	
				±2639645 : C*, P*, D* with bellows option	
		65	±2685156		
	Joint #3	1	−1976708 : G6-**1S*, D* −1647257 : G6-**1C*, P*, D with bellows option		
		3	−1811982 : G6-**3S*, D* −1647257 : G6-**3C*, P*, D* with bellows option		
	Joint #4		±1961226		

*a : G6-45*** Joint #2

		Max. motion range	Max. pulse range
G6-45*S* / D*	Z 0 to –270	147.5 deg	±2685156 pulse
	Z –270 to –330	145 deg	±2639645 pulse
G6-45*C*/ P* / D* with bellows option	Z 0 to –240	147.5 deg	±2685156 pulse
	Z –240 to –300	142 deg	±2585031 pulse

Item			G6-*****
Resolution	Joint #1		0.0000343 deg/pulse
	Joint #2		0.0000549 deg/pulse
	Joint #3	1	0.0000911 mm/pulse
		3	0.0001821 mm/pulse
	Joint #4		0.0001836 deg/pulse
Motor power consumption	Joint #1		400 W
	Joint #2		400 W
	Joint #3		200 W
	Joint #4		100 W
Payload	rated		3 kg
	max.		6 kg
Joint #4 allowable moment of inertia *4	rated		0.01 kg·m^2
	max.		0.12 kg·m^2
Hand	Shaft diameter		ø20 mm
	Through hole		ø14 mm
Joint #3 down force			150 N
Installed wire for customer use			24 (15 pin + 9 pin : D-sub)
Installed pneumatic tube for customer use			2 pneumatic tubes (ø6 mm) : 0.59 MPa (6 kgf/cm^2 : 86 psi)
			2 pneumatic tubes (ø4 mm) : 0.59 MPa (6 kgf/cm^2 : 86 psi)
Environmental requirements	Ambient Temperature		5 to 40°C (with minimum temperature variation)
	Ambient relative humidity		10 to 80% (no condensation)
Equivalent continuous A-weighted sound pressure level *5			L_{Aeq} = 70 dB(A)
Applicable Controller *6			RC180, RC620, RC700-A
Assignable Value ( ) Default values	SPEED		1 to (5) to100
	ACCEL *7		1 to (10) to 120
	SPEEDS		1 to (50) to 2000
	ACCELS		1 to (200) to 25000
	FINE		0 to (10000) to 65000
	WEIGHT		0,250 to (3,250) 6,250
Safety standard			CE Marking : EMC Directive, Machinery Directive, RoHS Directive KC Marking / KCs Marking UL standards (In case of UL specification): UL1740, ANSI/RIA R15.06, NFPA 79

*1: The exhaust system in the Cleanroom-model Manipulator (G6-***C*) draws air from the base interior and arm cover interior.
A crack or other opening in the base unit can cause loss of negative air pressure in the outer part of the arm, which can cause increased dust emission.
Do not remove the maintenance cover on the front of the base.
Seal the exhaust port and the exhaust tube with vinyl tape so that the joint is airtight.
If the exhaust flow is not sufficient, dust particle emission may exceed the specified maximum level.

Cleanliness level: Class ISO 3 (ISO14644-1)
Amount of Dust (0.1 µm diameter or larger) in 28317 cm^3 (1cft) sample-air around the center of the motion rang: 10 particles or less.)

Exhaust System : Exhaust port diameter : Inner diameter: ø12 mm / Outer diameter: ø16 mm
Exhaust tube : Polyurethane tube
Outer diameter: ø12 mm (Inner diameter:ø8 mm)
or Inner diameter ø16mm or larger
Recommended exhaust flow rate : Approx. 1000 cm^3/s (Normal)

ESD specification uses resin materials with antistatic treatment. This model controls adhesion of dust due to electrification.

*2: IP (International Protection) for the Protected-model Manipulator indicates International Standard of the protection level against dust and water.

Normal G6-***D* Manipulators do not have bellows. The normal G6-***D* Manipulator (without bellows option) operates under adverse conditions with oily mist.

If necessary, select the bellows option at shipment.

The Manipulators with bellows (option) comply with grade of protection IP54 (IEC 60529, JIS C0920).

Model	Degree of protection		
G6-***D* with bellows option	IP54	Dust : 5	Dust shall not ingress in a quantity to interfere with satisfactory operation of the equipment.
		Water: 4	Water splashing against the enclosure from any direction shall have no harmful effect.
G6-***P*	IP65	Dust : 6	No ingress of dust.
		Water: 5	Water projected by a nozzle against enclosure from any direction shall have no harmful effects.

*3: In the case of PTP command. Maximum operating speed for CP command is 2000 mm/s on horizontal plane.

*4: In the case where the center of gravity is at the center of Joint #4. If the center of gravity is not at the center of Joint #4, set the parameter using Inertia command.

*5: Conditions of Manipulator during measurement as follows:
Operating conditions : Under rated load, 4-joints simultaneous motion, maximum speed, maximum acceleration, and duty 50%.
Measurement point : Rear of the Manipulator, 1000 mm apart from the motion range, 50 mm above the base-installed surface.

*6: For delivery in April, 2008 or earlier, there are systems in combination of G series and RC170.

*7: In general use, Accel setting 100 is the optimum setting that maintains the balance of acceleration and vibration when positioning. Although values larger than 100 can be set to Accel, it is recommended to minimize the use of large values to necessary motions since operating the manipulator continuously with the large Accel setting may shorten the product life remarkably.

2.5 How to Set the Model

The Manipulator model for your system has been set before shipment from the factory.
It is normally not required to change the model when you receive your system.

CAUTION	■ When you need to change the setting of the Manipulator model, be sure to set the Manipulator model properly. Improper setting of the Manipulator model may result in abnormal or no operation of the Manipulator and/or cause safety problems.

NOTE

If an MT label is attached to the rear of a Manipulator, the Manipulator has custom specifications. The custom specifications may require a different configuration procedure; check the custom specifications number described on the MT label and contact us when necessary.

The Manipulator model can be set from software.
Refer to the chapter *Robot Configuration* in the *EPSON RC+ User's Guide*.

3. Environments and Installation

3.1 Environmental Conditions

A suitable environment is necessary for the robot system to function properly and safely. Be sure to install the robot system in an environment that meets the following conditions:

Item	Conditions
Ambient temperature *1	5 to 40°C (with minimum temperature variation)
Ambient relative humidity	10 to 80% (no condensation)
First transient burst noise	2 kV or less
Electrostatic noise	4 kV or less
Environment	- Install indoors. - Keep away from direct sunlight. - Keep away from dust, oily smoke, salinity, metal powder or other contaminants. - Keep away from flammable or corrosive solvents and gases. - Keep away from water. - Keep away from shocks or vibrations. - Keep away from sources of electric noise.

NOTE ☞ Manipulators are not suitable for operation in harsh environments such as painting areas, etc. When using Manipulators in inadequate environments that do not meet the above conditions, please contact us.

*1 The ambient temperature conditions are for the Manipulators only. For the Controller the Manipulators are connected to, refer to the Controller manual.

For the Protected-model Manipulator, be sure to install the robot system in an environment that also meets the following conditions:

Item	Conditions
Environment	- Install indoors. - Keep away from direct sunlight. - Keep away from salinity or other contaminants. - Keep away from flammable or corrosive solvents (including water)*2 and gases. - Keep away from shock or vibration. - Keep away from sources of electric noise. - It can be used under conditions with dust, oily smoke, metal powder or other contaminants.*3

*2 The Manipulator body is mainly made of iron and aluminum. It is not rust-proofed. Do not use the Manipulator under conditions where the Manipulator can expose to water or any other corrosive liquid.

*3 Any contaminants that can deteriorate sealing performance of nitrile rubber oil sealing, O-rings, packing seals and liquid gasket should be avoided.

Special Environmental Conditions

The protective seals are attached on the Protected-model Manipulator to prevent dust, water, etc. from the outside. Follow the precautions in use environment described below:

The surface of the Manipulator has general oil resistance. However, if your requirements specify that the Manipulator must withstand certain kinds of oil, please consult your distributor.

Rapid change in temperature and humidity can cause condensation inside the Manipulator.

If your requirements specify that the Manipulator handles food, please consult your distributor to check whether the Manipulator gives damage to the food or not.

The Manipulator cannot be used in corrosive environments where acid or alkaline is used. In a salty environment where the rust is likely to gather, the Manipulator is susceptible to rust.

The controller used with the Protected-model Manipulator does not have protection features for dusty, wet, or oily environment. The controller must be placed in an environment that meets the specified conditions.

WARNING	■ Use an earth leakage breaker on the AC power cable of the Controller to avoid electric shock and circuit breakdown caused by short circuit. Prepare the earth leakage brake that pertains the Controller you are using. For details, refer to the Controller manual.

CAUTION	■ When cleaning the Manipulator, do not rub it strongly with alcohol or benzene. It may lose luster on the coated face.

3.2 Base Table

A base table for anchoring the Manipulator is not supplied. Please make or obtain the base table for your Manipulator. The shape and size of the base table differs depending on the use of the robot system. For your reference, we list some Manipulator table requirements here.

The base table must not only be able to bear the weight of the Manipulator but also be able to withstand the dynamic movement of the Manipulator when the Manipulator operates at maximum acceleration. Ensure that there is enough strength on the base table by attaching reinforcing materials such as crossbeams.
The torque and reaction force produced by the movement of the Manipulator are as follows:

Max. Reaction torque on the horizontal plate	: 500 Nm
Max. Horizontal reaction force	: 2500 N
Max. Vertical reaction force	: 1500 N

The threaded holes required for mounting the Manipulator base are M8. Use mounting bolts with specifications conforming to ISO898-1 property class: 10.9 or 12.9.
For dimensions, refer to *Setup & Operation: 3.3 Mounting Dimensions*.

The plate for the Manipulator mounting face should be 20 mm thick or more and made of steel to reduce vibration. The surface roughness of the steel plate should be 25 μm or less.

The table must be secured on the floor or wall to prevent it from moving.

The Manipulator must be installed horizontally.

When using a leveler to adjust the height of the base table, use a screw with M16 diameter or more.

If you are passing cables through the holes on the base table, see the figures below.

[unit : mm]

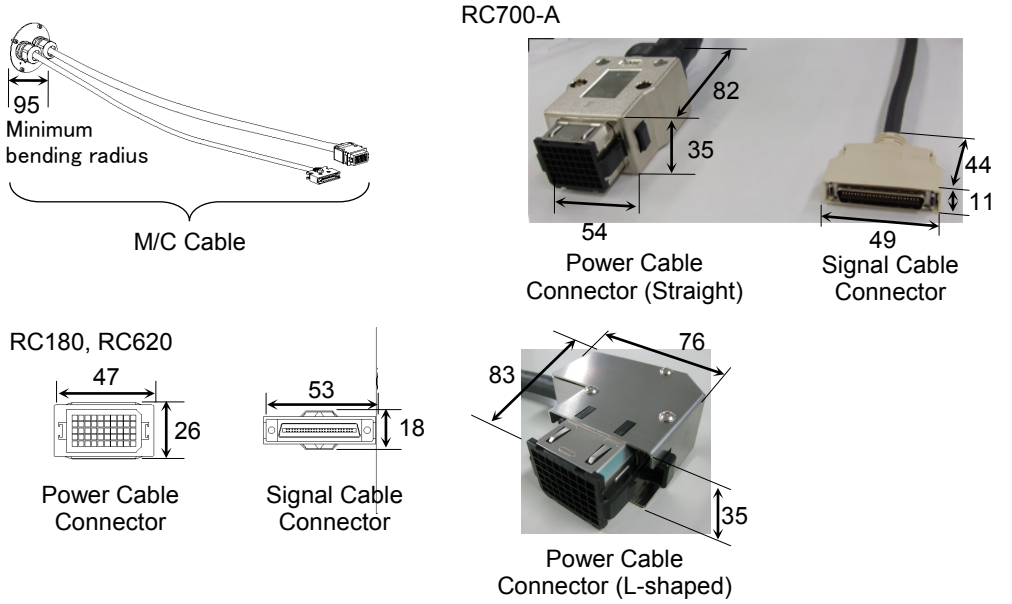

NOTE

Do not remove the M/C cables from the Manipulator.

For environmental conditions regarding space when placing the Controller on the base table, refer to the *Controller manual*.

WARNING	■ To ensure safety, a safeguard must be installed for the robot system. For details on the safeguard, refer to the *EPSON RC+ User's Guide*.

3.3 Mounting Dimensions

The maximum space described in figures shows that the radius of the end effector is 60 mm or less. If the radius of the end effector exceeds 60 mm, define the radius as the distance to the outer edge of maximum space.
If a camera or electromagnetic valve extends outside of the arm, set the maximum range including the space that they may reach.

Be sure to allow for the following extra spaces in addition to the space required for mounting the Manipulator, Controller, and peripheral equipment.

Space for teaching

Space for maintenance and inspection
(Ensure a space to open the rear side cover and the maintenance cover for maintenance.)

Space for cables

The minimum bend radius of the power cable is 90 mm. When installing the cable, be sure to maintain sufficient distance from obstacles. In addition, leave enough space for other cables so that they are not bent forcibly.

Ensure distance to the safeguard from the maximum motion range is more than 100 mm.

Table Top Mounting

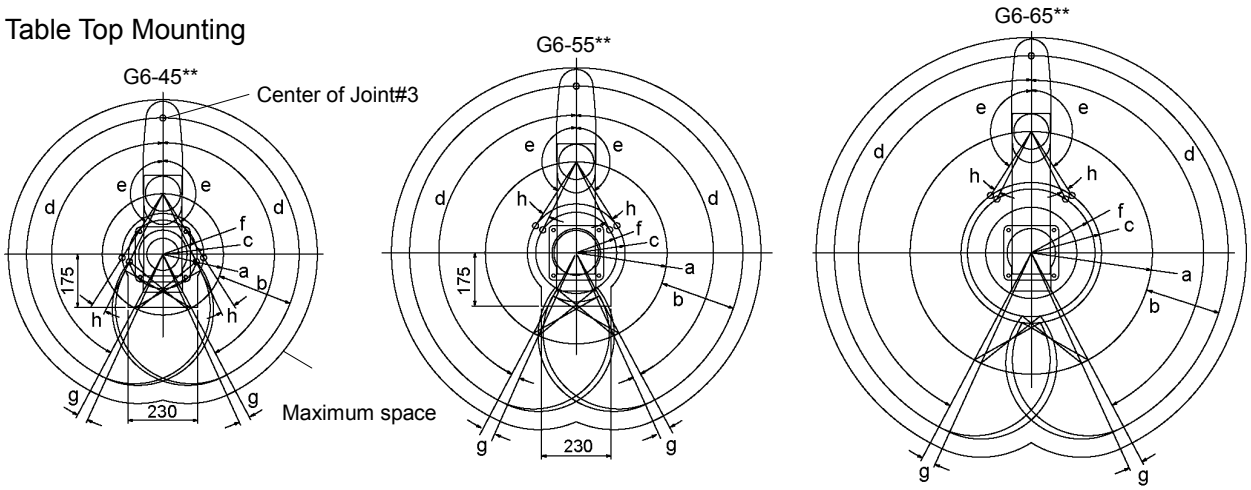

		G6-45*				G6-55**	G6-65**
		S, D		C, P, D bellows			
a	Length of Arm #1 (mm)	200				300	400
b	Length of Arm #2 (mm)	250				250	250
c	(Motion range)	Z : 0 to –270	134.8	Z : 0 to –240	134.8	161.2	232
		Z : –270 to –330	143.5	Z : –240 to –300	153.9		
d	Motion range of Joint #1 (degree)	152				152	152
e	Motion range of Joint #2 (degree)	Z : 0 to –270	147.5	Z : 0 to –240	147.5	147.5	147.5
		Z : –270 to –330	145	Z : –240 to –300	142		
f	(Mechanical stop area)	124.4				133.8	207.5
g	Joint #1 angle to hit mechanical stop (degree)	3.5				3.5	3.5
h	Joint #1 angle to hit mechanical stop (degree)	Z : 0 to –270	3	Z : 0 to –270	3	6.3	6.3
		Z : –270 to –330	5.5	Z : –270 to –330	8.5		

The bellows for G6-***D are options at shipment.

NOTE ☞ In the range Z: 0 to –270 mm, the area is limited by interference of the Manipulator body and the arm.

Wall Mounting

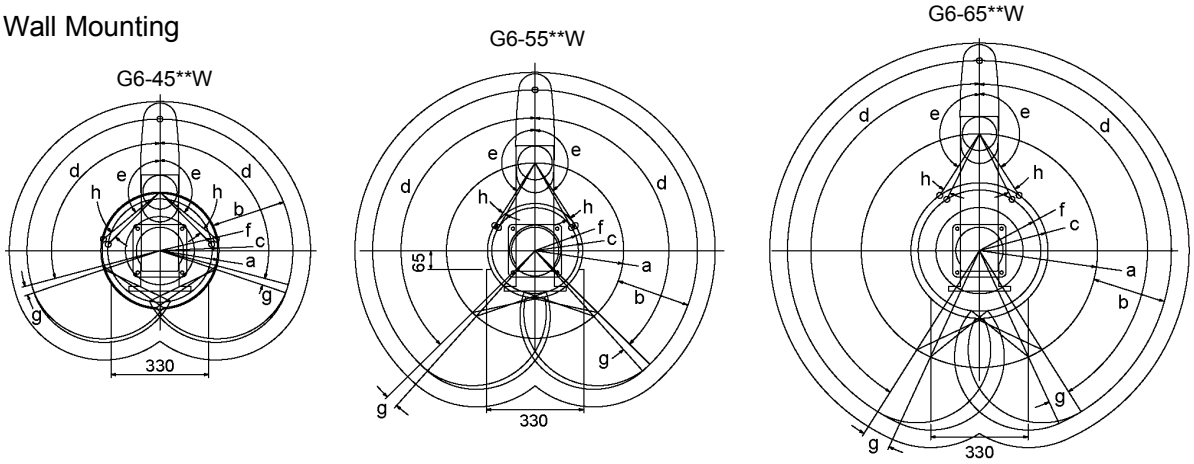

		G6-45**W	G6-55*		G6-65**W
			SW, DW	CW, PW, DW bellows	
a	Length of Arm #1 (mm)	200	300		400
b	Length of Arm #2 (mm)	250	250		250
c	(Motion range)	195.5	161.2	172.1	232
d	Motion range of Joint #1 (degree)	105	135		148
e	Motion range of Joint #2 (degree)	130	147.5	145	147.5
f	(Mechanical stop area)	182.4	146.8		207.5
g	Joint #1 angle to hit mechanical stop (degree)	3.5	3.5		7.5
h	Joint #2 angle to hit mechanical stop (degree)	3.8	3.3	5.8	6.3

The bellows for G6-***DW are options at shipment.

Ceiling Mounting

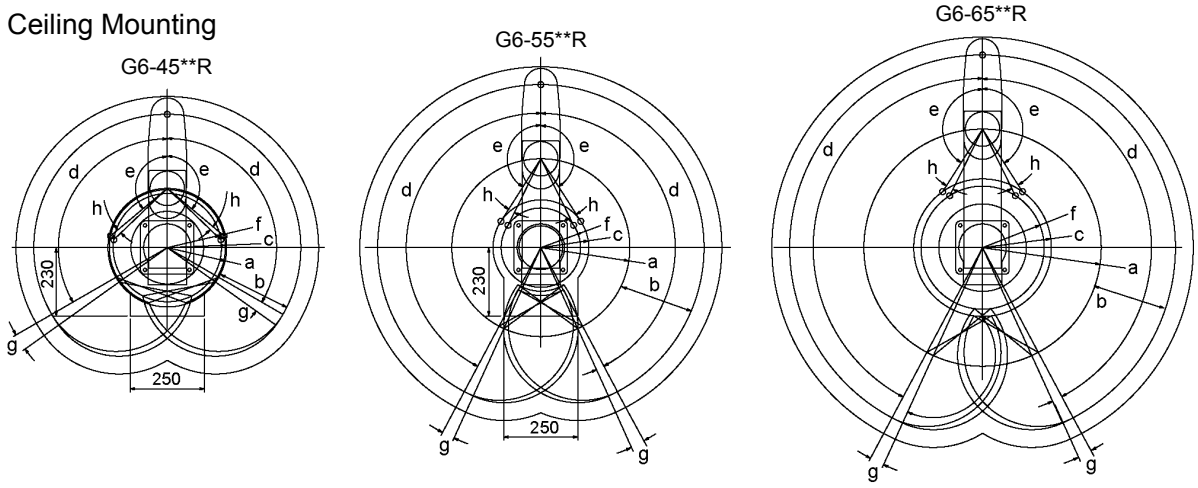

		G6-45**R	G6-55*		G6-65**R
			SR, DR	CR, PR, DR bellows	
a	Length of Arm #1 (mm)	200	300		400
b	Length of Arm #2 (mm)	250	250		250
c	(Motion range)	195.5	161.2	172.1	232
d	Motion range of Joint #1 (degree)	120	152		152
e	Motion range of Joint #2 (degree)	130	147.5	145	147.5
f	(Mechanical stop area)	182.4	146.8		207.5
g	Joint #1 angle to hit mechanical stop (degree)	5.5	3.5		3.5
h	Joint #2 angle to hit mechanical stop (degree)	3.8	3.3	5.8	6.3

The bellows for G6-***DR are options at shipment.

3.4 Unpacking and Transportation

THE INSTALLATION SHALL BE PERFORMED BY QUALIFIED INSTALLATION PERSONNEL AND SHOULD CONFORM TO ALL NATIONAL AND LOCAL CODES.

WARNING	■ Only authorized personnel should perform sling work and operate a crane and a forklift. When these operations are performed by unauthorized personnel, it is extremely hazardous and may result in serious bodily injury and/or severe equipment damage to the robot system.

CAUTION

■ Using a cart or similar equipment, transport the Manipulator in the same manner as it was delivered.

■ After removing the bolts securing the Manipulator to the delivery equipment, the Manipulator can fall. Be careful not to get hands or fingers caught.

■ The arm is secured with a wire tie. Leave the wire tie secured until you finish the installation so as not to get hands or fingers caught.

■ To carry the Manipulator, have two or more people to work on it and secure the Manipulator to the delivery equipment or hold the areas indicated in gray in the figure (bottom of Arm #1 and bottom of the base) by hand.
When holding the bottom of the base by hand, be very careful not to get your hands or fingers caught.

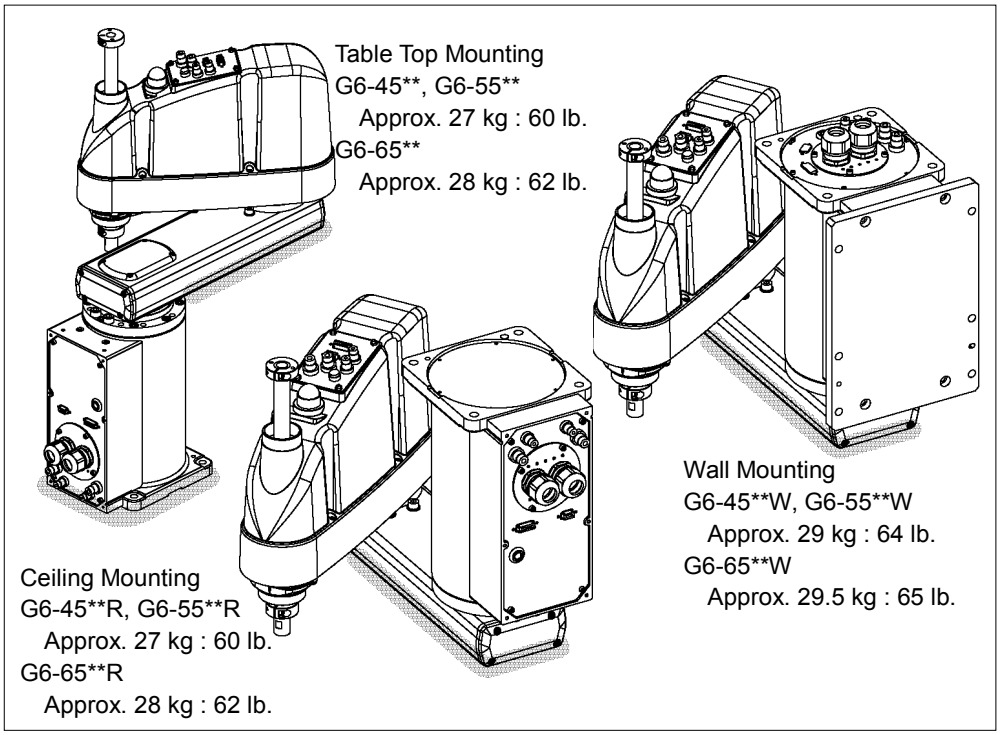

■ Stabilize the Manipulator with your hands when hoisting it.

■ When transporting the Manipulator for a long distance, secure it to the delivery equipment directly so that the Manipulator never falls.
If necessary, pack the Manipulator in the same style as it was delivered.

3.5 Installation

CAUTION	■ The robot system must be installed to avoid interference with buildings, structures, utilities, other machines and equipment that may create a trapping hazard or pinch points. ■ Oscillation (resonance) may occur during operation depending on rigidity of the installation table. If the oscillation occurs, improve rigidity of the table or change the speed or acceleration and deceleration settings.

The following sections describe the installation of the Standard Manipulator.

3.5.1 Table Top Mounting
3.5.2 Wall Mounting
3.5.3 Ceiling Mounting

When the Manipulator is a Cleanroom-model or Protected-model, refer to each section.

3.5.4 Cleanroom-model
3.5.5 Protected-model

3.5.1 Table Top Mounting

CAUTION	■ Install the Table Top Mounting Manipulator with two or more people. The Manipulator weights are as follows. Be careful not to get hands, fingers, or feet caught and/or have equipment damaged by a fall of the Manipulator. G6-45** : Approximately 27 kg: 60 lb. G6-55** : Approximately 27 kg: 60 lb. G6-65** : Approximately 28 kg: 62 lb.

Standard-model

(1) Secure the base to the base table with four bolts.

NOTE
Use bolts with specifications conforming to ISO898-1 Property Class: 10.9 or 12.9.

Tightening torque:
32.0 N·cm (326 kgf·cm)

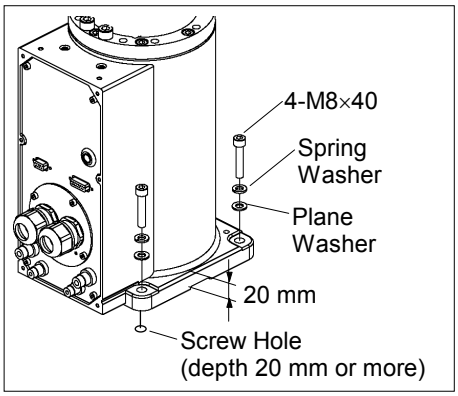

(2) Using nippers, cut off the wire tie binding the shaft and arm retaining bracket on the base.

(3) Remove the bolts securing the wire ties removed in step (2).

(4) Remove the fixing jig for transport.

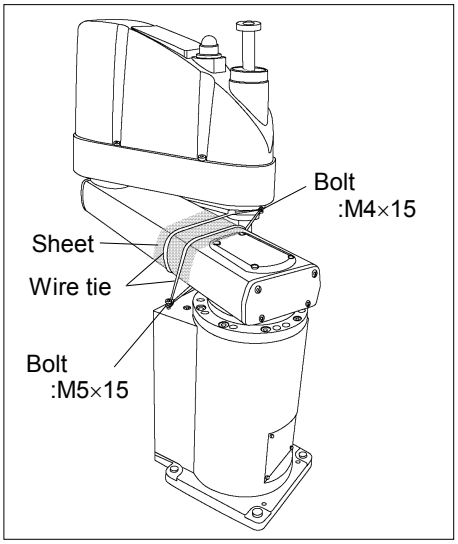

3.5.2 Wall Mounting

WARNING	■ Install the Wall Mounting Manipulator with two or more people. The Manipulator weights are as follows. Be careful not to get hands, fingers, or feet caught and/or have equipment damaged by a fall of the Manipulator. G6-45**W : Approximately 29 kg: 64 lb. G6-55**W : Approximately 29 kg: 64 lb. G6-65**W : Approximately 29.5 kg: 65 lb. ■ When installing the Manipulator to the wall, support the Manipulator, and then secure the anchor bolts. Removing the support without securing the anchor bolts properly is extremely hazardous and may result in fall of the Manipulator.

Standard-model

(1) Unpack the manipulator with retaining the arm posture.

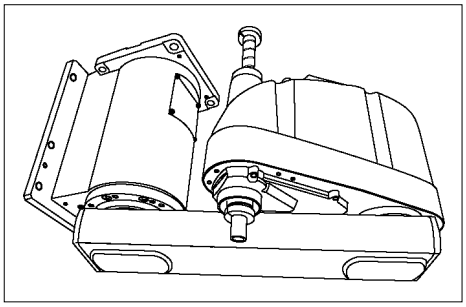

(2) Secure the base to the wall with six bolts.

NOTE

Use bolts with specifications conforming to ISO898-1 Property Class: 10.9 or 12.9.

Tightening torque:
32.0 N·cm (326 kgf·cm)

(3) Remove the fixing jig for transport.

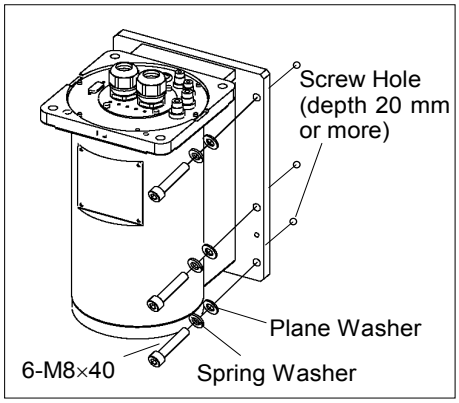

3.5.3 Ceiling Mounting

⚠ WARNING	■ Install the Ceiling Mounting Manipulator with two or more people. The Manipulator weights are as follows. Be careful not to get hands, fingers, or feet caught and/or have equipment damaged by a fall of the Manipulator. G6-45**R : Approximately 27 kg: 60 lb. G6-55**R : Approximately 27 kg: 60 lb. G6-65**R : Approximately 28 kg: 62 lb. ■ When installing the Manipulator to the ceiling, support the Manipulator, and then secure the anchor bolts. Removing the support without securing the anchor bolts properly is extremely hazardous and may result in fall of the Manipulator.

Standard-model

(1) Unpack the manipulator with retaining the arm posture.

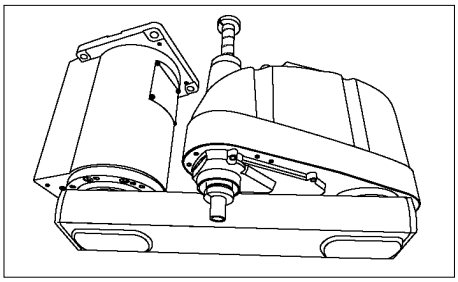

(2) Secure the base to the ceiling with four bolts.

NOTE ☞ Use bolts with specifications conforming to ISO898-1 Property Class: 10.9 or 12.9.

Tightening torque:
32.0 N·cm (326 kgf·cm)

(3) Remove the fixing jig for transport.

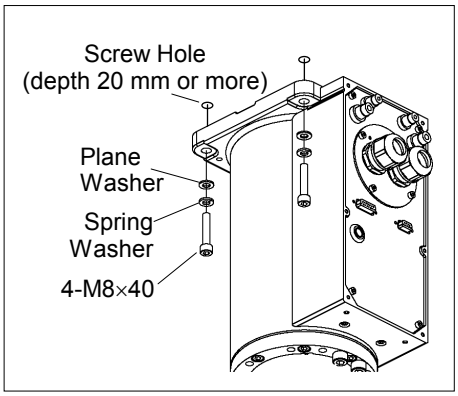

3.5.4 Cleanroom-model

(1) Unpack it outside of the clean room.

(2) Secure the Manipulator to delivery equipment such as a pallet with bolts so that the Manipulator does not fall.

(3) Wipe off the dust on the Manipulator with a little alcohol or distilled water on a lint-free cloth.

(4) Carry the Manipulator in the clean room.

(5) Refer to the installation procedure of each Manipulator model and install the Manipulator.

(6) Connect an exhaust tube to the exhaust port.

3.5.5 Protected-model

Refer to the installation procedure of each Manipulator model and install the Manipulator. When the Manipulator is a Protected-model, be aware of the followings.

WARNING	■ Connect the power cable connection and the signal cable connector to the Manipulator immediately after the Manipulator installation. The Manipulator without connecting them may result in electric shock and/or malfunction of the robot system as it cannot ensure IP54 / IP65.

CAUTION	■ When operating the Manipulator under special environmental conditions (adverse conditions with dust and oily smoke), do not place the controller in the same condition since the controller does not comply with IP54 / IP65. Doing so may cause equipment damage to and/or malfunction of the controller.

3.6 Connecting the Cables

WARNING	■ To shut off power to the robot system, pull out the power plug from the power source. Be sure to connect the AC power cable to a power receptacle. DO NOT connect it directly to a factory power source. ■ Before performing any replacement procedure, turn OFF the Controller and related equipment, and then pull out the power plug from the power source. Performing any replacement procedure with the power ON is extremely hazardous and may result in electric shock and/or malfunction of the robot system. ■ Be sure to connect the cables properly. Do not allow unnecessary strain on the cables. (Do not put heavy objects on the cables. Do not bend or pull the cables forcibly.) The unnecessary strain on the cables may result in damage to the cables, disconnection, and/or contact failure. Damaged cables, disconnection, or contact failure is extremely hazardous and may result in electric shock and/or improper function of the robot system. ■ Grounding the manipulator is done by connecting with the controller. Ensure that the controller is grounded and the cables are correctly connected. If the ground wire is improperly connected to ground, it may result in the fire or electric shock.

CAUTION	■ When connecting the Manipulator to the Controller, make sure that the serial numbers on each equipment match. Improper connection between the Manipulator and Controller may not only cause improper function of the robot system but also serious safety problems. The connection method varies with the Controller used. For details on the connection, refer to the *Controller manual*. If the G series Manipulator is connected to the Controller for the 6-axis robot, it may result in malfunction of the Manipulator.

When the Manipulator is a Cleanroom-model, be aware of the followings.

When the Manipulator is a Cleanroom-model, use it with an exhaust system.

For details, refer to *Setup & Operation: 2.4 Specifications.*

When the Manipulator is a Protected-model, be aware of the followings.

WARNING	■ Connect the power cable connection and the signal cable connector to the Manipulator immediately after the Manipulator installation. The Manipulator without connecting them may result in electric shock and/or malfunction of the robot system as it cannot ensure IP54 / IP65.

CAUTION	■ When operating the Manipulator under special environmental conditions (adverse conditions with dust and oily smoke), do not place the controller in the same condition since the controller does not comply with IP54 / IP65. Doing so may cause equipment damage to and/or malfunction of the controller.

Cable Connections

Connect the power connector and signal connector of the M/C cables to the Controller.

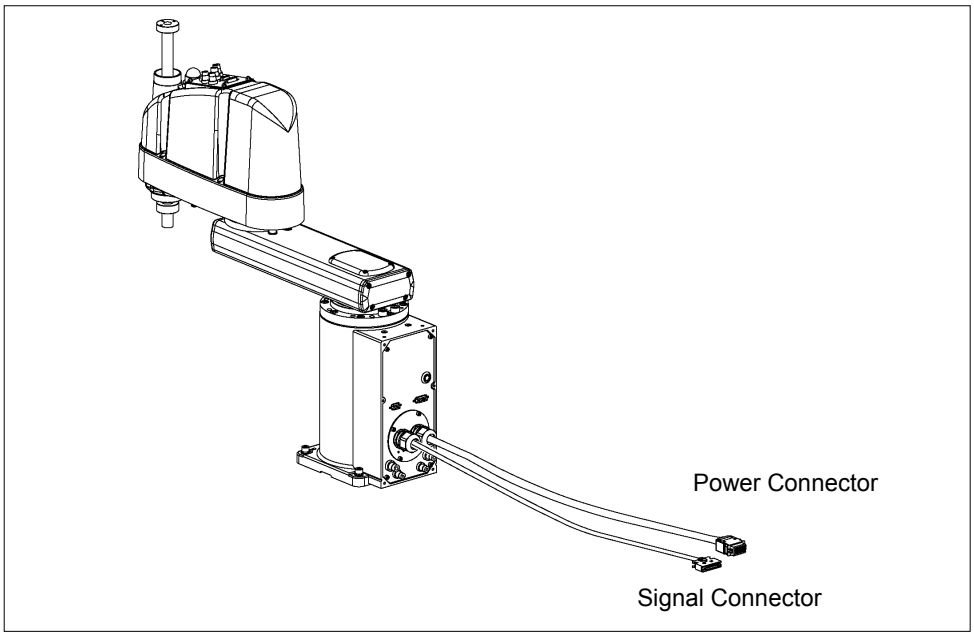

3.7 User Wires and Pneumatic Tubes

CAUTION	■ Only authorized or certified personnel should be allowed to perform wiring. Wiring by unauthorized or uncertified personnel may result in bodily injury and/or malfunction of the robot system.

User electrical wires and pneumatic tubes are contained in the cable unit.

Electrical Wires

Rated Voltage	Allowable Current	Wires	Nominal Sectional Area	Outer Diameter	Note
AC/DC30 V	1 A	24	0.211 mm^2	ø8.3±0.3mm	Shielded

		Maker	Standard	
15 pin	Suitable Connector	JAE	DA-15PF-N	(Solder type)
	Clamp Hood	JAE	DA-C8-J10-F2-1R	(Connector setscrew: #4-40 NC)
9 pin	Suitable Connector	JAE	DE9PF-N	(Solder type)
	Clamp Hood	JAE	DE-C8-J9-F2-1R	(Connector setscrew: #4-40 NC)

Pins with the same number, indicated on the connectors on both ends of the cables, are connected.

Pneumatic Tubes

Max. Usable Pneumatic Pressure	Pneumatic Tubes	Outer Diameter × Inner Diameter
0.59 MPa (6 kgf/cm^2 : 86 psi)	2	ø6 mm × ø4 mm
	2	ø4 mm × ø2.5 mm

Fittings for ø6 mm and ø4 mm (outer diameter) pneumatic tubes are supplied on both ends of the pneumatic tubes.

When the Manipulator is a Protected-model, be aware of the followings.

CAUTION	■ Be sure to use IP54 or IP65 compliant wires and tubes when using the Manipulator under special environmental conditions (adverse condition with dust and oily smoke). Using unprotected wires and tubes may cause equipment damage to and/or malfunction of the Manipulator as proper operation of the Manipulator under the conditions is no more guaranteed. ■ Be sure to attach the cap on the user cable connector when not using the connector. Using the Manipulator without the cap may cause equipment damage to and/or malfunction of the Manipulator as dust or oily smoke gets into the connector.

Common Parts

* Color differs depending on the shipment time

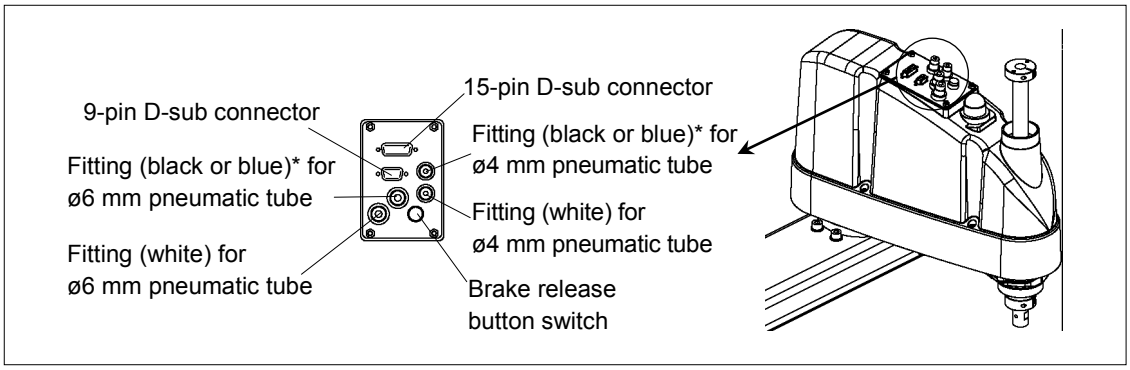

Table Top Mounting

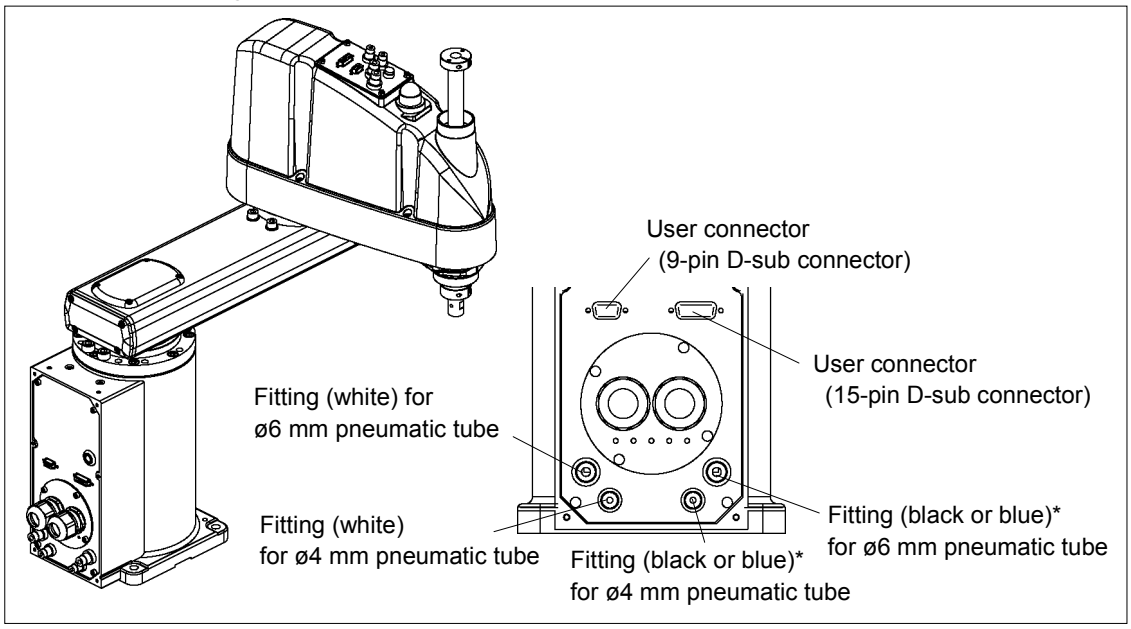

Wall Mounting

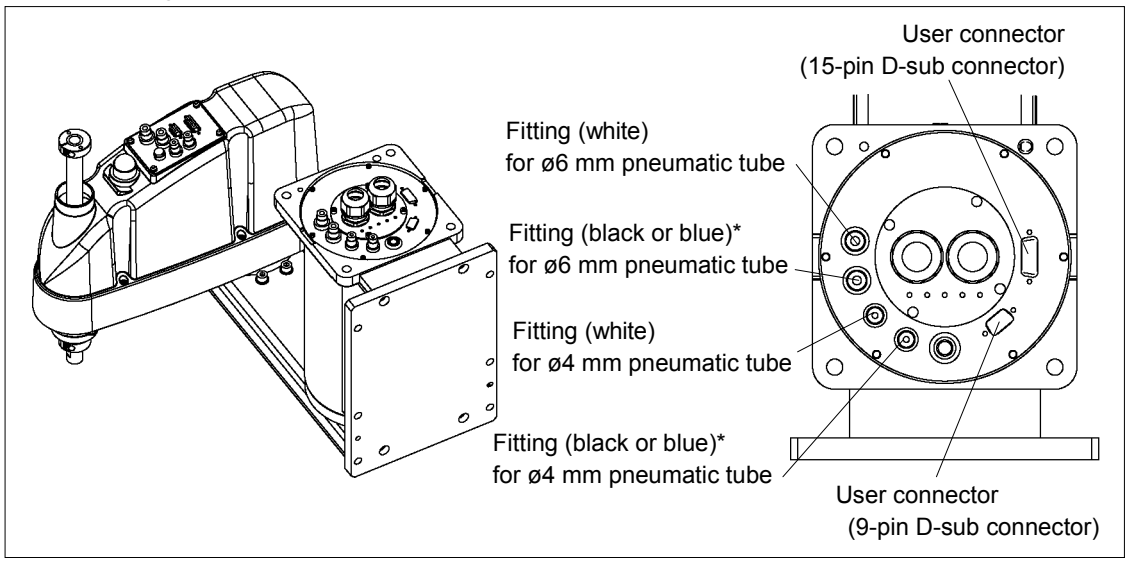

Ceiling Mounting

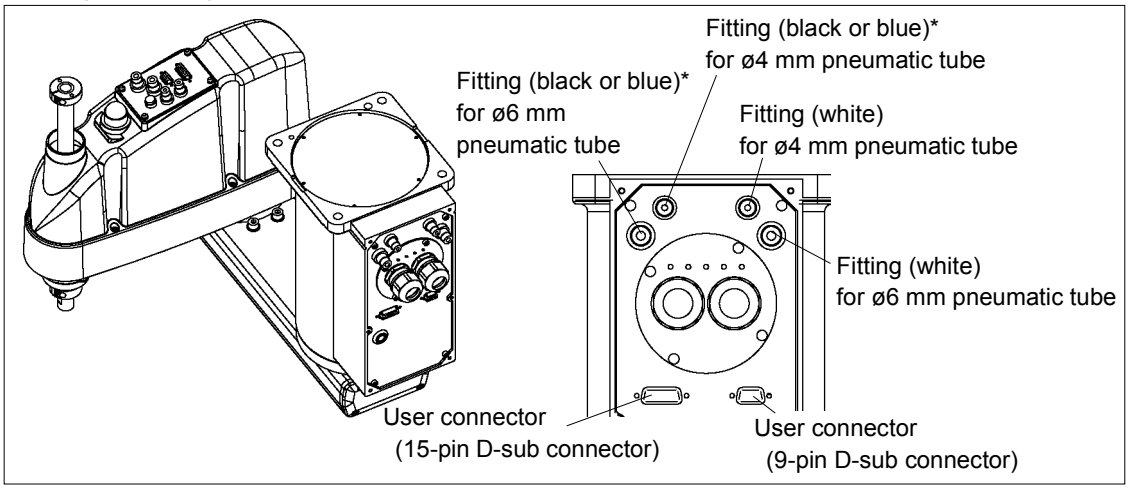

3.8 Relocation and Storage

3.8.1 Precautions for Relocation and Storage

Observe the following when relocating, storing, and transporting the Manipulators.

THE INSTALLATION SHALL BE PERFORMED BY QUALIFIED INSTALLATION PERSONNEL AND SHOULD CONFORM TO ALL NATIONAL AND LOCAL CODES.

WARNING	■ Only authorized personnel should perform sling work and operate a crane and a forklift. When these operations are performed by unauthorized personnel, it is extremely hazardous and may result in serious bodily injury and/or severe equipment damage to the robot system.

CAUTION	■ Before relocating the Manipulator, fold the arm and secure it tightly with a wire tie to prevent hands or fingers from being caught in the Manipulator. ■ When removing the anchor bolts, support the Manipulator to prevent falling. Removing the anchor bolts without support may result in a fall of the Manipulator, and then get hands, fingers, or feet caught. ■ To carry the Manipulator, have two or more people to work on it and secure the Manipulator to the delivery equipment or hold the bottom of Arm #1, the bottom of the main cable fitting, and the bottom of the base by hand. When holding the bottom of the base by hand, be very careful not to get hands or fingers caught. ■ Stabilize the Manipulator with your hands when hoisting it. Unstable hoisting is extremely hazardous and may result in fall of the Manipulator.

When transporting the Manipulator for a long distance, secure it to the delivery equipment so that the Manipulator cannot fall.
If necessary, pack the Manipulator in the same way as it was delivered.

When the Manipulator is used for a robot system again after long-term storage, perform a test run to verify that it works properly, and then operate it thoroughly.

Transport and store the Manipulator in the range of -25°C to +55°C.
Humidity within 10% to 90% is recommended.

When condensation occurs on the Manipulator during transport or storage, turn ON the power only after the condensation dries.

Do not shock or shake the Manipulator during transport.

3.8.2 Table Top Mounting

CAUTION	■ Install or relocate the Table Top Mounting Manipulator with two or more people. The Manipulator weights are as follows. Be careful not to get hands, fingers, or feet caught and/or have equipment damaged by a fall of the Manipulator. G6-45** : Approximately 27 kg: 60 lb. G6-55** : Approximately 27 kg: 60 lb. G6-65** : Approximately 28 kg: 62 lb.

(1) Turn OFF the power on all devices and unplug the cables.

NOTE

Remove the mechanical stops if using them to limit the motion range of Joints #1 and #2. For details on the motion range, refer to *Setup & Operation: 5.2 Motion Range Setting by Mechanical Stops*.

(2) Cover the arm with a sheet so that the arm will not be damaged.
Tie the lower end of the shaft and arm, and the base and arm together with a wire tie.
Be careful not to tie them too tight. Otherwise, the shaft may bend.

Example of Arm Retaining Posture

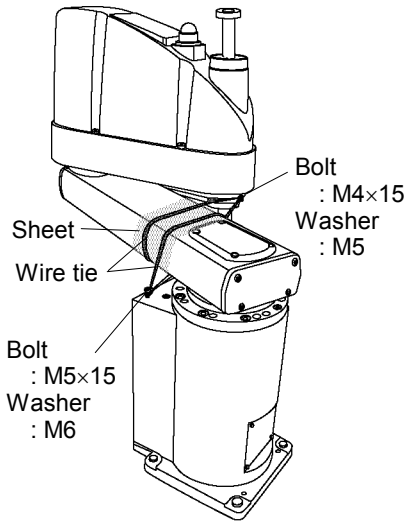

(3) Hold the bottom of Arm #1 by hand to unscrew the anchor bolts.
Then, remove the Manipulator from the base table.

3.8.3 Wall Mounting

⚠ WARNING	■ Install or relocate the Wall Mounting Manipulator with two or more people. The Manipulator weights are as follows. Be careful not to get hands, fingers, or feet caught and/or have equipment damaged by a fall of the Manipulator. G6-45**W : Approximately 29 kg: 64 lb. G6-55**W : Approximately 29 kg: 64 lb. G6-65**W : Approximately 29.5 kg: 65 lb. ■ When removing the Manipulator from the wall, support the Manipulator, and then remove the anchor bolts. Removing the anchor bolts without supporting is extremely hazardous and may result in fall of the Manipulator.

(1) Turn OFF the power on all devices and unplug the cables.

NOTE ☞ Remove the mechanical stops if using them to limit the motion range of Joints #1 and #2. For details on the motion range, refer to *Setup & Operation: 5.2 Motion Range Setting by Mechanical Stops*.

(2) Cover the arm with a sheet so that the arm will not be damaged.
Refer to the figure below and bind the shaft and arm retaining bracket on the base.

Example of Arm Retaining Posture

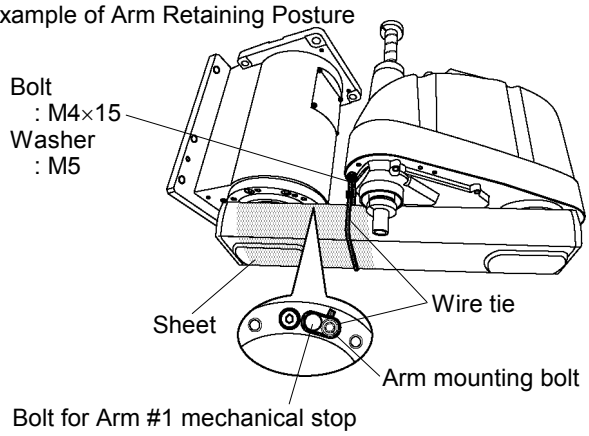

(3) Hold the bottom of Arm #1 by hand to unscrew the anchor bolts. Then, remove the Manipulator from the wall.

3.8.4 Ceiling Mounting

WARNING	■ Install or relocate the Ceiling Mounting Manipulator with two or more people. The Manipulator weights are as follows. Be careful not to get hands, fingers, or feet caught and/or have equipment damaged by a fall of the Manipulator. G6-45**R : Approximately 27 kg: 60 lb. G6-55**R : Approximately 27 kg: 60 lb. G6-65**R : Approximately 28 kg: 62 lb. ■ When removing the Manipulator from the ceiling, support the Manipulator, and then remove the anchor bolts. Removing the anchor bolts without supporting is extremely hazardous and may result in fall of the Manipulator.

(1) Turn OFF the power on all devices and unplug the cables.

NOTE

Remove the mechanical stops if using them to limit the motion range of Joints #1 and #2. For details on the motion range, refer to *Setup & Operation: 5.2 Motion Range Setting by Mechanical Stops*.

(2) Cover the arm with a sheet so that the arm will not be damaged.
Refer to the figure below and bind the shaft and arm retaining bracket on the base.

Example of Arm Retaining Posture

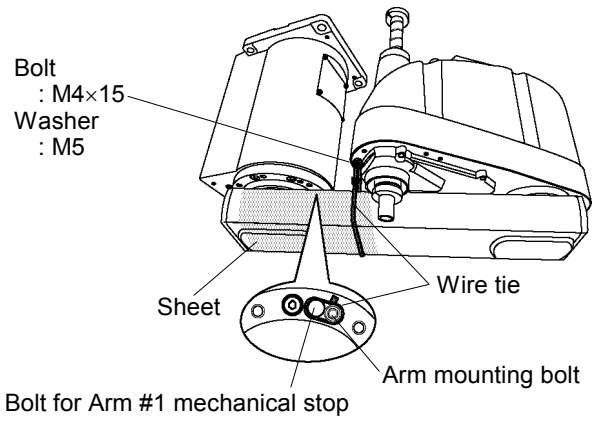

(3) Hold the bottom of Arm #1 by hand to unscrew the anchor bolts. Then, remove the Manipulator from the ceiling.

4. Setting of End Effectors

4.1 Attaching an End Effector

Users are responsible for making their own end effector(s). Before attaching an end effector, observe these guidelines.

CAUTION	■ If you use an end effector equipped with a gripper or chuck, connect wires and/or pneumatic tubes properly so that the gripper does not release the work piece when the power to the robot system is turned OFF. Improper connection of the wires and/or pneumatic tubes may damage the robot system and/or work piece as the work piece is released when the Emergency Stop switch is pressed. I/O outputs are configured at the factory so that they are automatically shut off (0) by power disconnection, the Emergency Stop switch, or the safety features of the robot system.

Shaft

- Attach an end effector to the lower end of the shaft.
  For the shaft dimensions, and the overall dimensions of the Manipulator, refer to *Setup & Operation: 2. Specifications*.
- Do not move the upper limit mechanical stop on the lower side of the shaft. Otherwise, when "Jump motion" is performed, the upper limit mechanical stop may hit the Manipulator, and the robot system may not function properly.
- Use a split muff coupling with an M4 bolt or larger to attach the end effector to the shaft.

Brake release switch

- Joints #3 and #4 (G6-**3**) cannot be moved up/down by hand because the electromagnetic brake is applied to the joints while power to the robot system is turned OFF. This prevents the shaft from hitting peripheral equipment and rotating in the case that the shaft is lowered by the weight of the end effector when the power is disconnected during operation, or when the motor is turned OFF even though the power is turned ON.

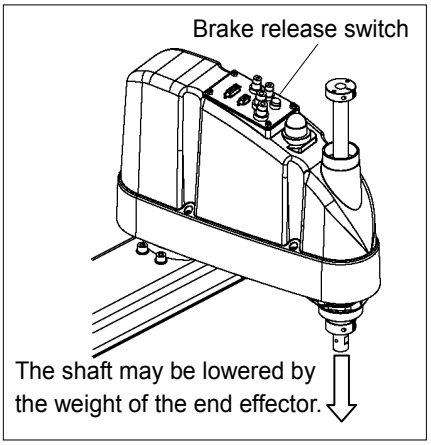

  To move Joint #3 up/down or rotate Joint #4 (G6-**3**) while attaching an end effector, turn ON the Controller and move the joint up/down or rotate the joint while pressing the brake release switch.
  This button switch is a momentary-type; the brake is released only while the button switch is being pressed.
  The respective brakes for Joints #3 and #4 (G6-**3**) are released simultaneously.
- Be careful of the shaft falling and rotating while the brake release switch is being pressed because the shaft may be lowered by the weight of the end effector.
- For G6-**1**, Joint #4 has no brake on it.

Layouts

- When you operate the manipulator with an end effector, the end effector may interfere with the Manipulator because of the outer diameter of the end effector, the size of the work piece, or the position of the arms. When designing your system layout, pay attention to the interference area of the end effector.

4.2 Attaching Cameras and Valves

Arm #2 has threaded holes as shown in the figure below. Use these holes for attaching cameras, valves, and other equipment. [Unit: mm]

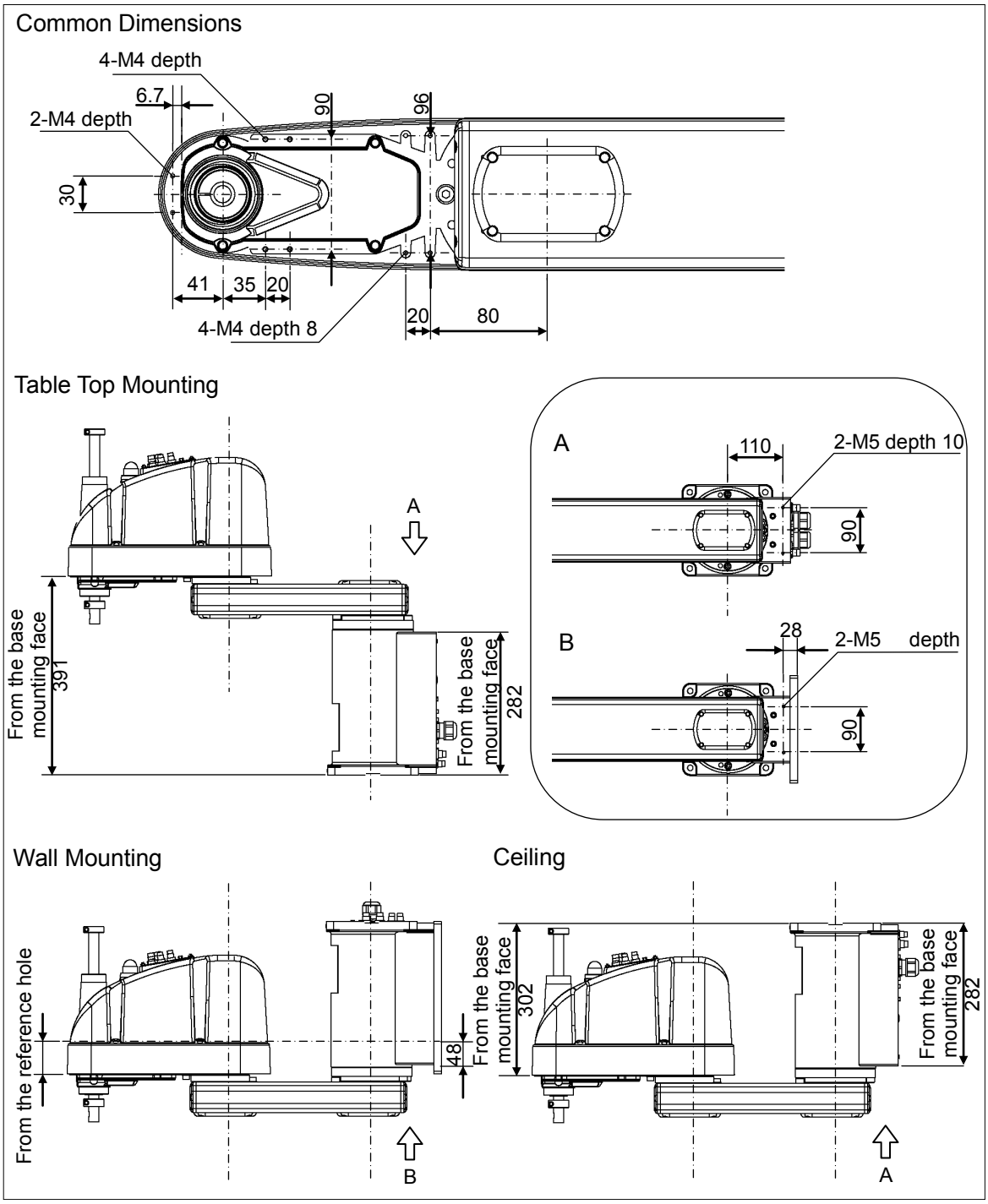

4.3 Weight and Inertia Settings

To ensure optimum Manipulator performance, it is important to make sure that the load (weight of the end effector and work piece) and moment of inertia of the load are within the maximum rating for the Manipulator, and that Joint #4 does not become eccentric.
If the load or moment of inertia exceeds the rating or if the load becomes eccentric, follow the steps below, "*4.3.1 Weight Setting*" and "*4.3.2 Inertia Setting*" to set parameters.
Setting parameters makes the PTP motion of the Manipulator optimal, reduces vibration to shorten the operating time, and improves the capacity for larger loads. In addition, it reduces persistent vibration produced when the moment of inertia of the end effector and work piece is larger than the default setting.

4.3.1 Weight Setting

CAUTION	■ The total weight of the end effector and the work piece must not exceed 6 kg. The G6 series Manipulators are not designed to work with loads exceeding 6 kg. Always set the Weight parameters according to the load. Setting a value that is smaller than the actual load may cause errors, excessive shock, insufficient function of the Manipulator, and/or shorten the life cycle of parts/mechanisms.

The acceptable weight capacity (end effector and work piece) in G6 series is 3 kg at the default rating and 6 kg at the maximum. When the load (weight of the end effector and work piece) exceeds the rating, change the setting of Weight parameter.
After the setting is changed, the maximum acceleration/deceleration speed of the robot system at PTP motion corresponding to the "Weight Parameter" is set automatically.

Load on the Shaft

The load (weight of the end effector and work piece) on the shaft can be set by Weight parameter.

EPSON RC+

Enter a value into the [Load inertia:] text box on the [Inertia] panel ([Tools] - [Robot Manager]). (You may also execute the Inertia command from the [Command Window].)

Load on the Arm

When you attach a camera or other devices to the arm, calculate the weight as the equivalent of the shaft. Then, add this to the load and enter the total weight to the Weight parameter.

Equivalent Weight Formula

When you attach the equipment near Arm #2: $W_M = M (L_1)^2/(L_1+L_2)^2$
When you attach the equipment to the end of Arm #2: $W_M = M (L_M)^2/(L_2)^2$

W_M : equivalent weight
M : weight of camera etc.
L_1 : length of Arm #1
L_2 : length of Arm #2
L_M : distance from rotation center of Joint #2 to center of gravity of camera etc.

<Example> A “1 kg” camera is attached to the end of the G6 series arm (450 mm away from the rotation center of Joint #2) with a load weight of “2 kg”.

$M=1$

$L_2=350$

$L_M=450$

$W_M=1\times450^2/350^2=1.65 \rightarrow 1.7$ (round up)

$W+W_M=2+1.7=3.7$

Enter “3.7” for the Weight Parameter.

Automatic speed setting by Weight

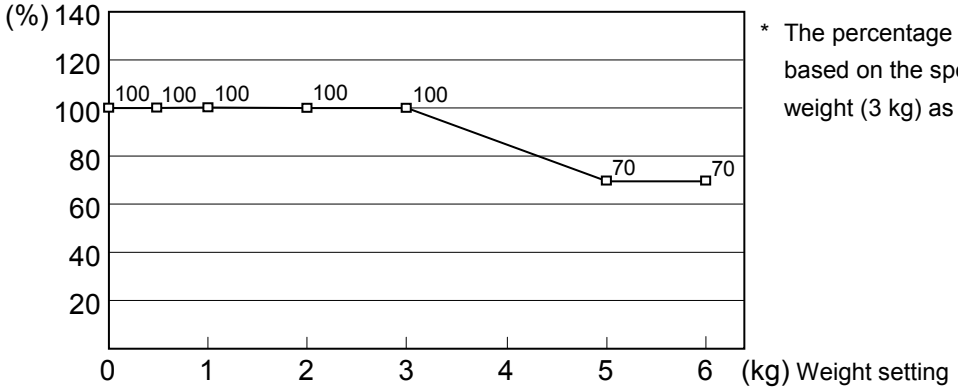

* The percentage in the graph is based on the speed at rated weight (3 kg) as 100%.

Automatic acceleration/deceleration setting by Weight

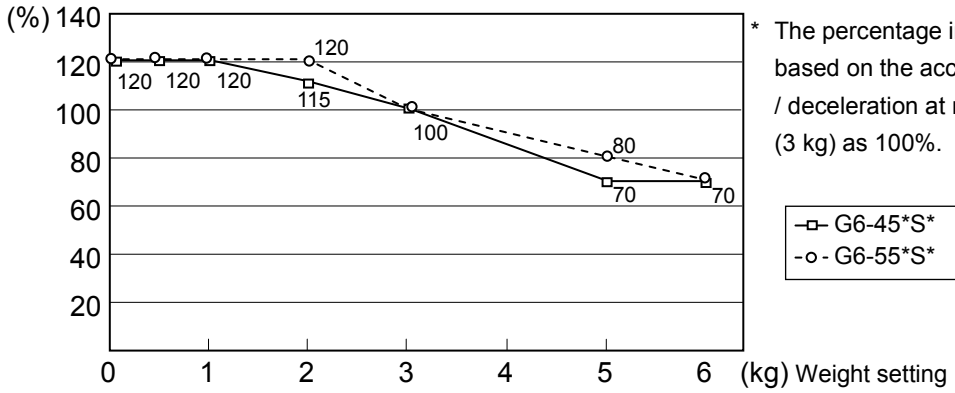

* The percentage in the graph is based on the acceleration / deceleration at rated weight (3 kg) as 100%.

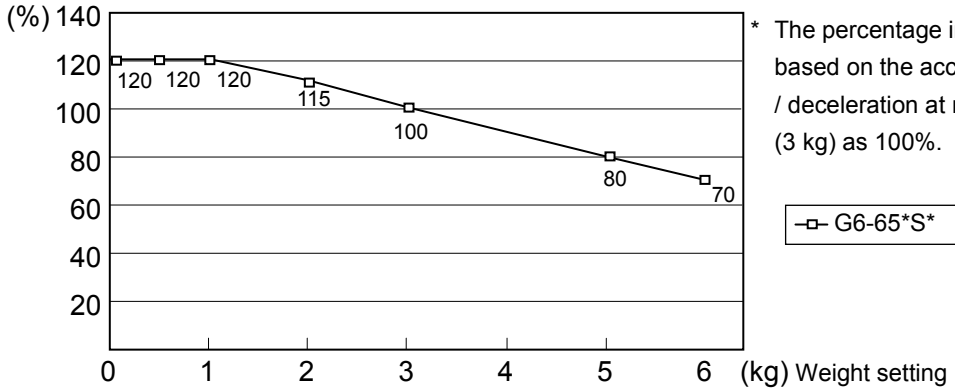

* The percentage in the graph is based on the acceleration / deceleration at rated weight (3 kg) as 100%.

4.3.2 Inertia Setting

Moment of Inertia and the Inertia Setting

The moment of inertia is defined as "the ratio of the torque applied to a rigid body and its resistance to motion". This value is typically referred to as "the moment of inertia", "inertia", or "GD^2". When the Manipulator operates with additional objects (such as an end effector) attached to the shaft, the moment of inertia of load must be considered.

CAUTION	■ The moment of inertia of the load (weight of the end effector and work piece) must be 0.12 kg·m^2 or less. The G6 series Manipulators are not designed to work with a moment of inertia exceeding 0.12 kg·m^2. Always set the moment of inertia parameter to the correct moment of inertia. Setting a value that is smaller than the actual moment of inertia may cause errors, excessive shock, insufficient function of the Manipulator, and/or shorten the life cycle of parts/mechanisms.

The acceptable moment of inertia of load for a G6 series Manipulator is 0.01 kg·m^2 at the default rating and 0.12 kg·m^2 at the maximum. When the moment of inertia of the load exceeds the rating, change the setting of the moment of inertia parameter of the Inertia command. After the setting is changed, the maximum acceleration/deceleration speed of Joint #4 at PTP motion corresponding to the "moment of inertia" value is set automatically.

Moment of inertia of load on the shaft

The moment of inertia of load (weight of the end effector and work piece) on the shaft can be set by the "moment of inertia" parameter of the Inertia command.

EPSON RC+

Enter a value into the [Load inertia:] text box on the [Inertia] panel ([Tools]-[Robot Manager]). (You may also execute the Inertia command from the [Command Window].)

Automatic acceleration/deceleration setting of Joint #4 by Inertia (moment of inertia)

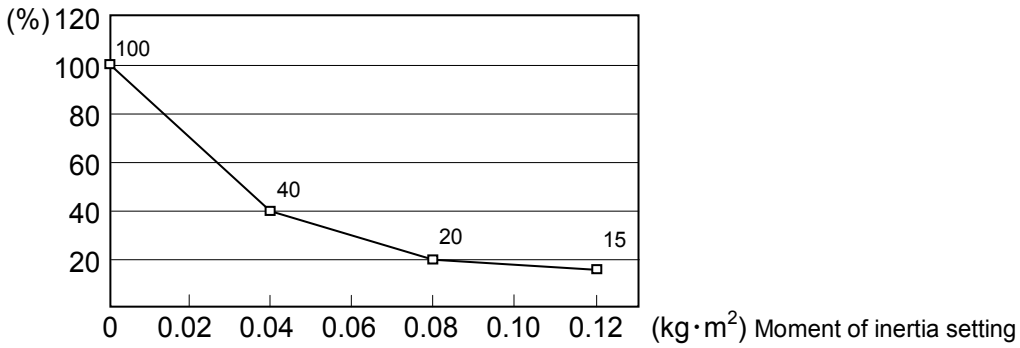

Eccentric Quantity and the Inertia Setting

CAUTION	■ The eccentric quantity of load (weight of the end effector and work piece) must be 150 mm or less. The G6 series Manipulators are not designed to work with eccentric quantity exceeding 150 mm. Always set the eccentric quantity parameter according to the eccentric quantity. Setting a value that is smaller than the actual eccentric quantity may cause errors, excessive shock, insufficient function of the Manipulator, and/or shorten the life cycle of parts/mechanisms.

The acceptable eccentric quantity of load in G6 series is 0 mm at the default rating and 150 mm at the maximum. When the eccentric quantity of load exceeds the rating, change the setting of eccentric quantity parameter of Inertia command. After the setting is changed, the maximum acceleration/deceleration speed of the Manipulator at PTP motion corresponding to the "eccentric quantity" is set automatically.

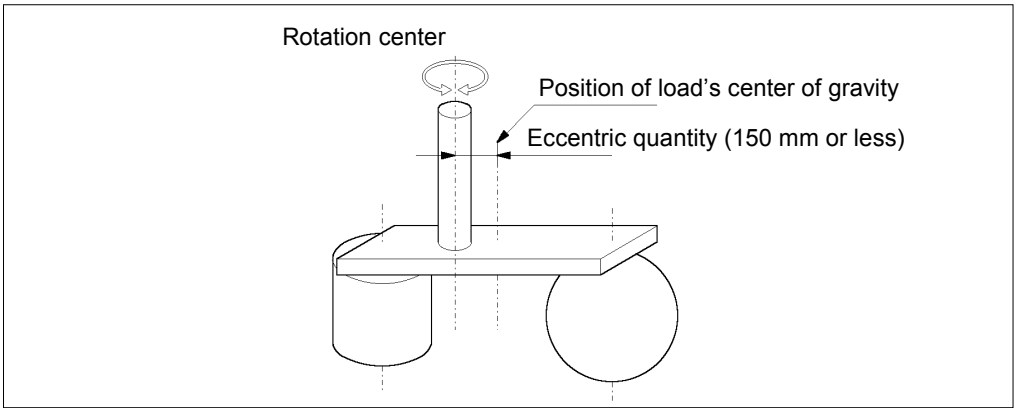

Eccentric Quantity

Eccentric quantity of load on the shaft

The eccentric quantity of load (weight of the end effector and work piece) on the shaft can be set by "eccentric quantity" parameter of Inertia command.

EPSON RC+

Enter a value into the [Eccentricity:] text box on the [Inertia] panel ([Tools]-[Robot Manager]). (You may also execute the Inertia command from the [Command Window].)

Automatic acceleration/deceleration setting by Inertia (eccentric quantity)

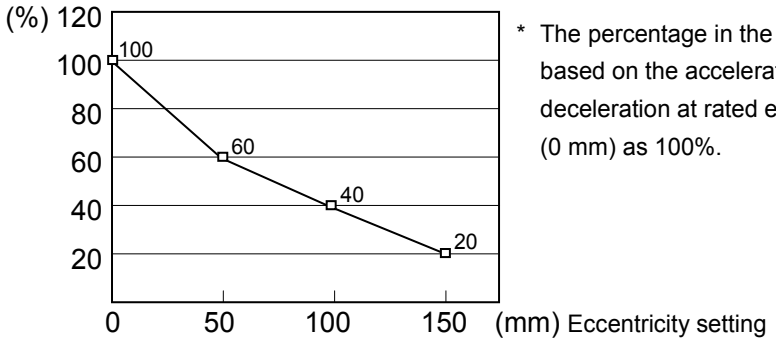

* The percentage in the graph is based on the acceleration / deceleration at rated eccentricity (0 mm) as 100%.

Calculating the Moment of Inertia

Refer to the following examples of formulas to calculate the moment of inertia of load (end effector with work piece).

The moment of inertia of the entire load is calculated by the sum of each part (a), (b), and (c).

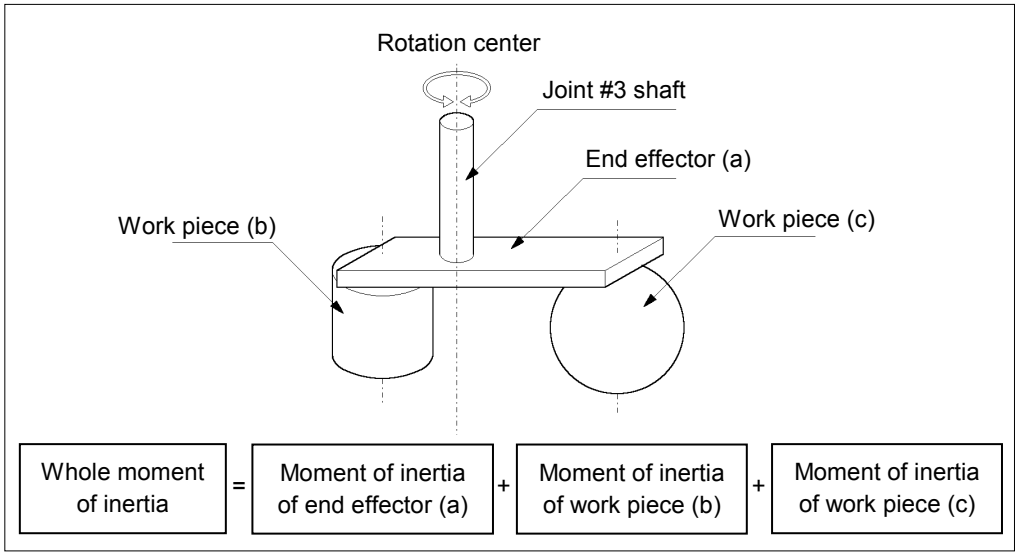

The methods for calculating the moment of inertia for (a), (b), and (c) are shown below. Calculate the total moment of inertia using the basic formulas.

(a) Moment of inertia of a rectangular parallelepiped

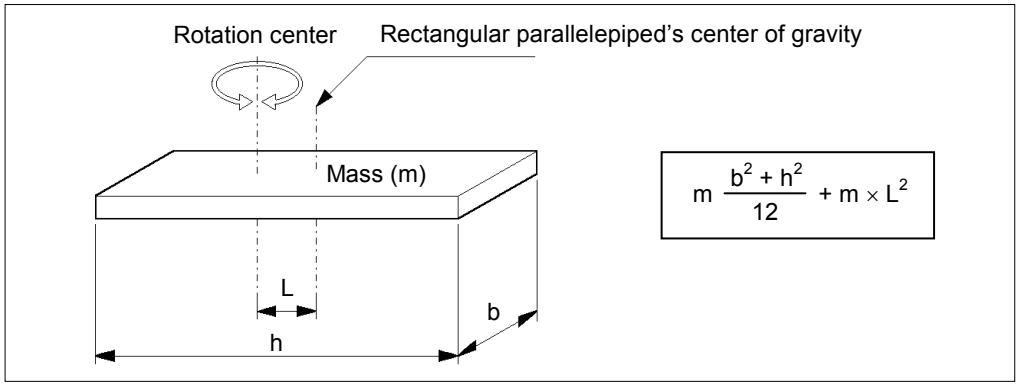

(b) Moment of inertia of a cylinder

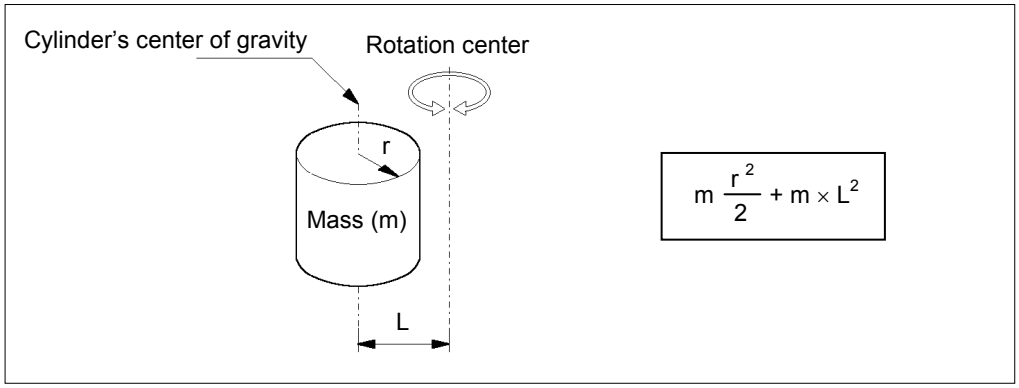

(c) Moment of inertia of a sphere

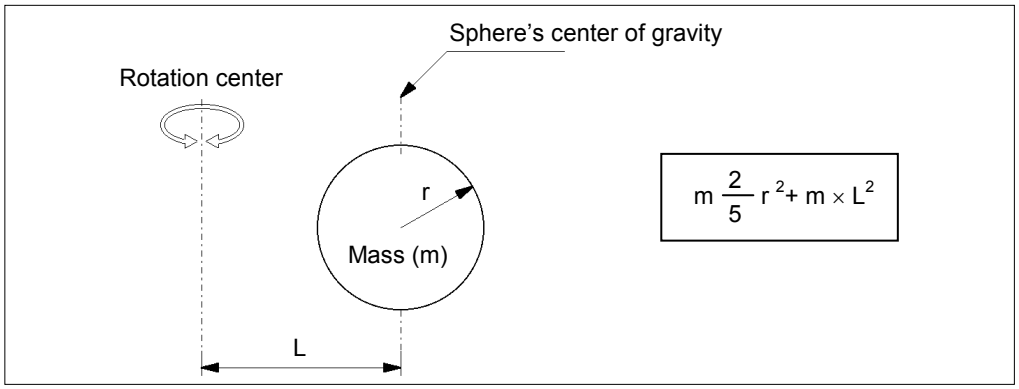

4.4 Precautions for Auto Acceleration/Deceleration of Joint #3

When you move the Manipulator in horizontal PTP motion with Joint #3 (Z) at a high position, the motion time will be faster.

When Joint #3 gets below a certain point, then auto acceleration/deceleration is used to reduce acceleration/deceleration. (Refer to the figure below.) The higher the position of the shaft is, the faster the motion acceleration/deceleration is. However, it takes more time to move Joint #3 up and down. Adjust the position of Joint #3 for the Manipulator motion after considering the relation between the current position and the destination position.

The upper limit of Joint #3 during horizontal motion using Jump command can be set by the LimZ command.

Automatic acceleration/deceleration vs. Joint #3 position

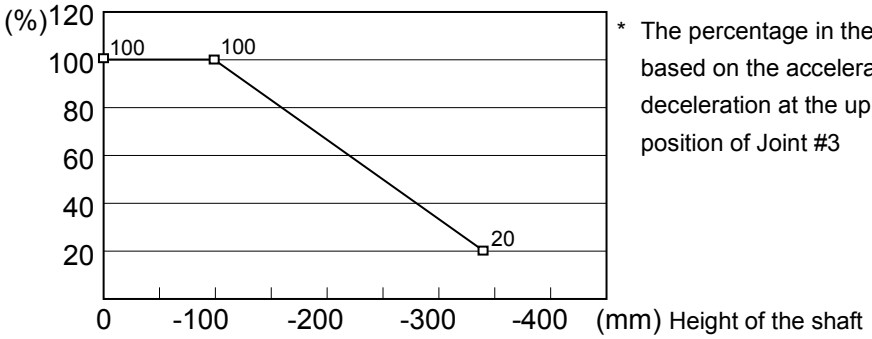

* The percentage in the graph is based on the acceleration / deceleration at the upper-limited position of Joint #3

NOTE ☞ When moving the Manipulator horizontally while the shaft is being lowered, it may cause over-shoot at the time of final positioning.

5. Motion Range

CAUTION	■ When setting up the motion range for safety, both the pulse range and mechanical stops must always be set at the same time.

The motion range is preset at the factory as explained in *Setup & Operation: 5.4 Standard Motion Range*. That is the maximum motion range of the Manipulator.

There are three methods for setting the motion range described as follows:

1. Setting by pulse range (for all joints)
2. Setting by mechanical stops (for Joints #1 to #3)
3. Setting the Cartesian (rectangular) range in the X, Y coordinate system of the Manipulator (for Joints #1 and #2)

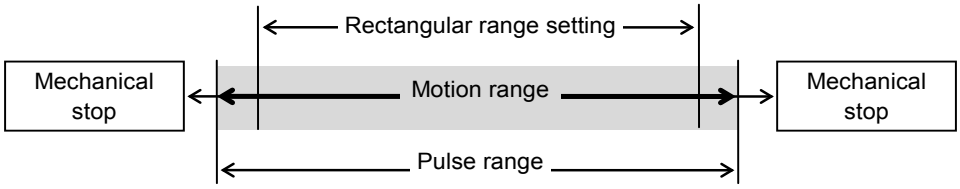

When the motion range is changed due to layout efficiency or safety, follow the descriptions in *5.1* to *5.3* to set the range.

5.1 Motion Range Setting by Pulse Range (for All Joints)

Pulses are the basic unit of Manipulator motion. The motion range of the Manipulator is controlled by the pulse range between the pulse lower limit and upper limit of each joint. Pulse values are read from the encoder output of the servo motor.

For the maximum pulse range, refer to the following sections.
The pulse range must be set inside of the mechanical stop range.

5.1.1 Max. Pulse Range of Joint #1
5.1.2 Max. Pulse Range of Joint #2
5.1.3 Max. Pulse Range of Joint #3
5.1.4 Max. Pulse Range of Joint #4.

NOTE ☞ Once the Manipulator receives an operating command, it checks whether the target position specified by the command is within the pulse range before operating. If the target position is out of the set pulse range, an error occurs and the Manipulator does not move.

EPSON RC+ The pulse range can be set on the [Range] panel shown by selecting [Tools]-[Robot Manager]. (You may also execute the Range command from the [Command Window].)

5.1.1 Max. Pulse Range of Joint #1

The 0 (zero) pulse position of Joint #1 is the position where Arm #1 faces toward the positive (+) direction on the X-coordinate axis.
When the 0 pulse is a starting point, the counterclockwise pulse value is defined as the positive (+) and the clockwise pulse value is defined as the negative (−).

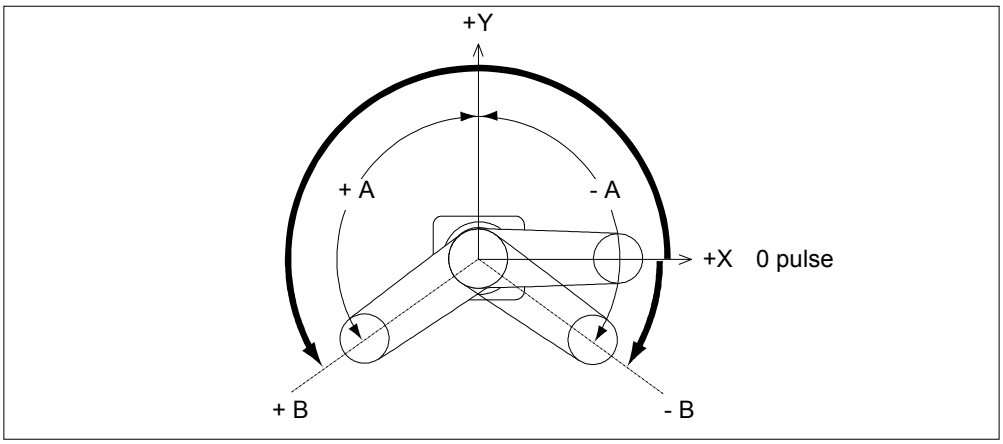

	Arm length	Table Top Mounting	Ceiling Mounting	Wall mounting
A Max. Motion Range	45	±152 degrees	±120 degrees	±105 degrees
	55			±135 degrees
	65			±148 degrees
B Max. Pulse Range	45	−1805881 to +7048761	−873814 to +6116694	−436907 to +5679787
	55			−1310720 to +6553600
	65			−1689373 to +6932253

5.1.2 Max. Pulse Range of Joint #2

The 0 (zero) pulse position of Joint #2 is the position where Arm #2 is in-line with Arm #1. With the 0 pulse as a starting point, the counterclockwise pulse value is defined as the positive (+) and the clockwise pulse value is defined as the negative (−).

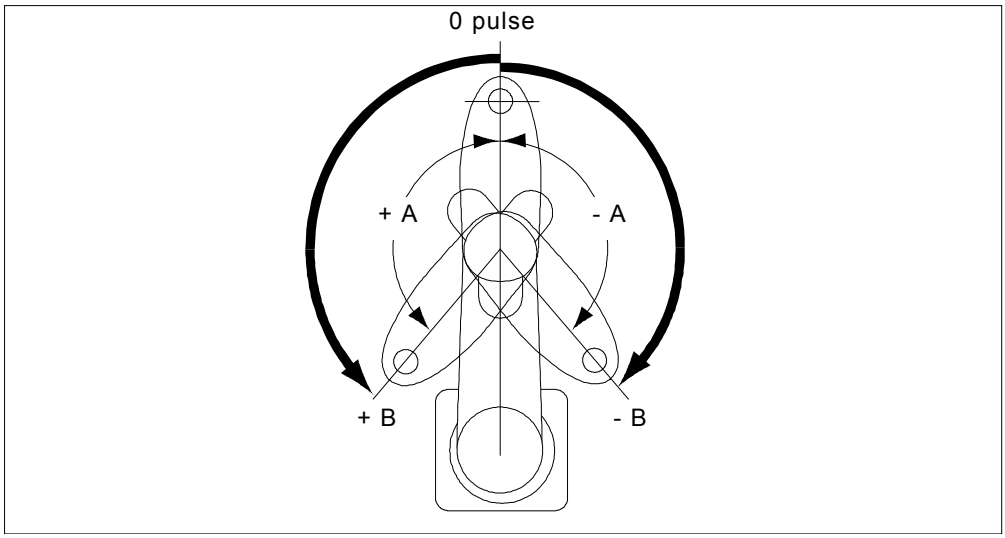

	Model		Table Top Mounting	Ceiling, Wall Mountings
A Max. Motion Range	G6-45*S*, D*	Z : 0 to –270 mm	±147.5 degrees	±130 degrees
		Z : –270 to –330 mm	±145 degrees	
	G6-45*C*, P*, D* bellows	Z : 0 to –240 mm	±147.5 degrees	
		Z : –240 to –300 mm	±142 degrees	
	G6-55*C*, P*, D* bellows		±147.5 degrees	±145 degrees
	G6-55*S*, D*		±147.5 degrees	
	G6-65***			
B Max. Pulse Range	G6-45*S*, D*	Z : 0 to –270 mm	±2685156	±2366578
		Z : –270 to –330 mm	±2369645	
	G6-45*C*, P*, D* bellows	Z : 0 to –240 mm	±2685156	
		Z : –240 to –300 mm	±2585031	
	G6-55*C*, P*, D* bellows		±2685156	±2639645
	G6-55*S*, D*		±2685156	
	G6-65***			

The bellows for G6-***D are options at shipment.

NOTE ☞ In the range Z: 0 to –270 mm, the area is limited by interference of the Manipulator body and the arm.

5.1.3 Max. Pulse Range of Joint #3

The 0 (zero) pulse position of Joint #3 is the position where the shaft is at its upper limit. The pulse value is always negative because Joint #3 always moves lower than the 0 pulse position.

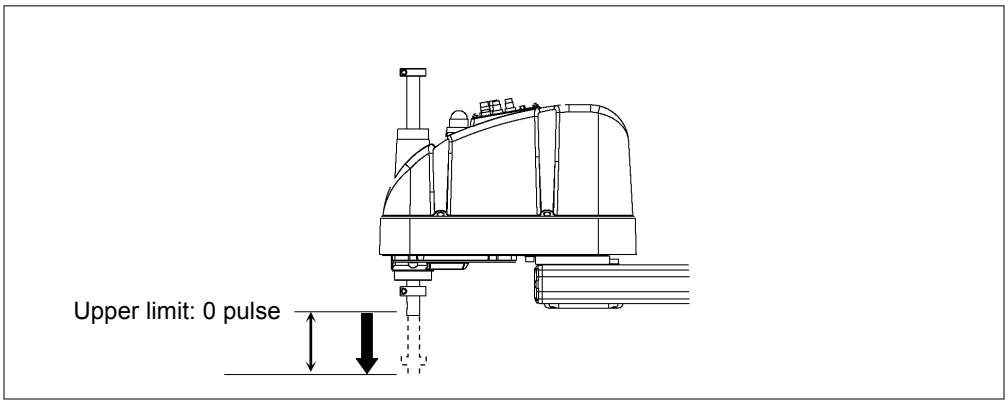

Model	Joint #3 Stroke	Minimum Limit Pulse
G6-**1S*, D*	180 mm	−1976708
G6-**3S*, D*	330 mm	−1811982
G6-**1C*, P*, D* bellows	150 mm	−1647257
G6-**3C*, P*, D* bellows	300 mm	−1647257

The bellows for G6-***D* are options at shipment.

NOTE

For the Cleanroom-model (G6-***C*) and Protected-model (G6-*** P*/D* with bellows option), the motion range set with the Joint #3 mechanical stop cannot be changed.

5.1.4 Max. Pulse Range of Joint #4

The 0 (zero) pulse position of Joint #4 is the position where the flat near the end of the shaft faces toward the end of Arm #2. With the 0 pulse as a starting point, the counterclockwise pulse value is defined as the positive (+) and the clockwise pulse value is defined as the negative (−).

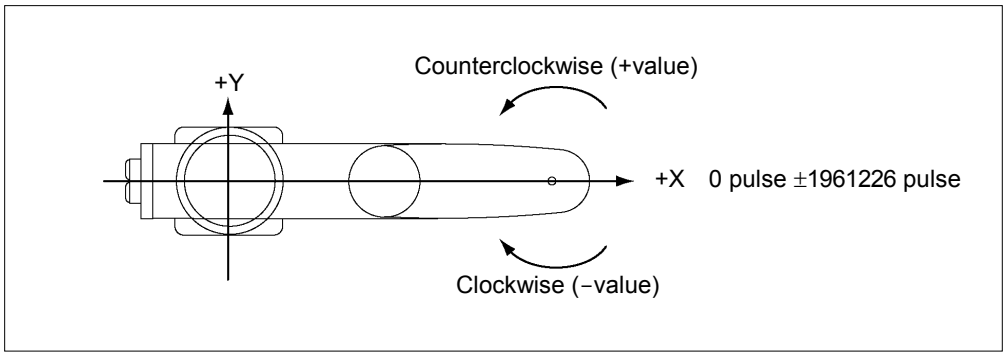

5.2 Motion Range Setting by Mechanical Stops

Mechanical stops physically limit the absolute area that the Manipulator can move.

Both Joints #1 and #2 have threaded holes in the positions corresponding to the angle for the mechanical stop settings. Install the bolts in the holes corresponding to the angle that you want to set.

Joints #3 can be set to any length less than the maximum stroke.

Table Top Mounting

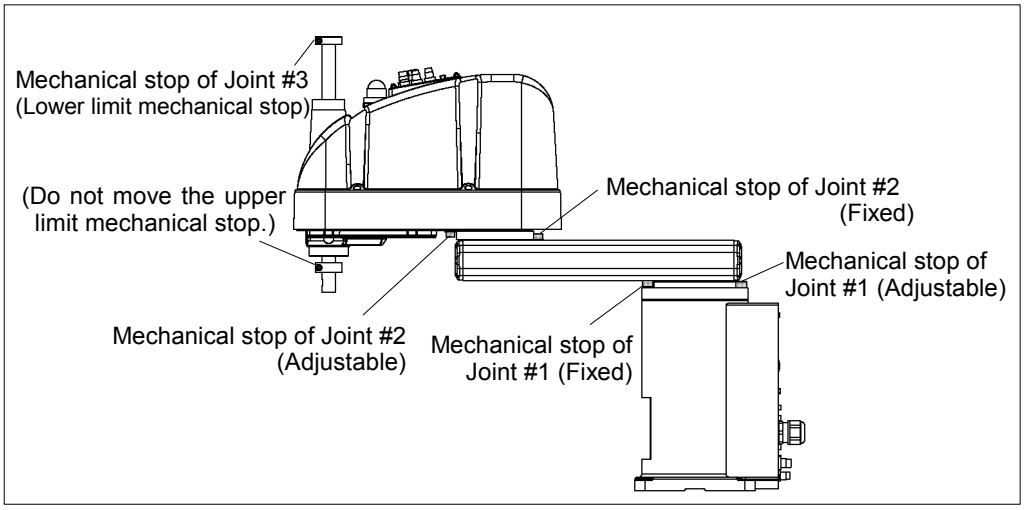

Wall Mounting

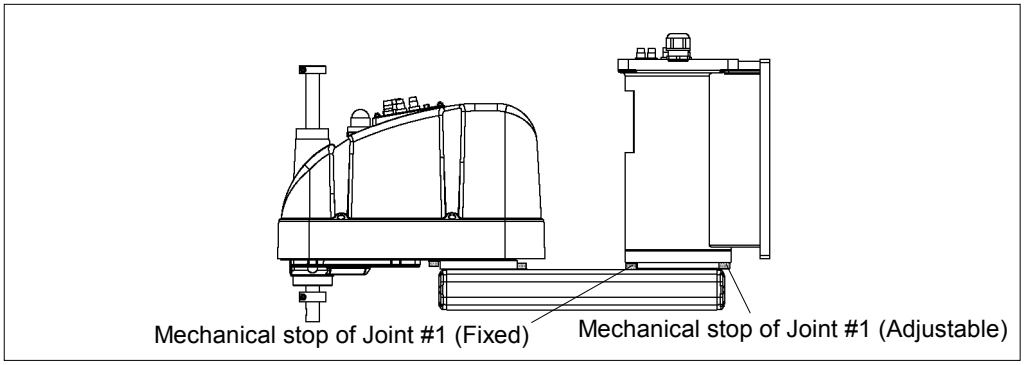

Ceiling Mounting

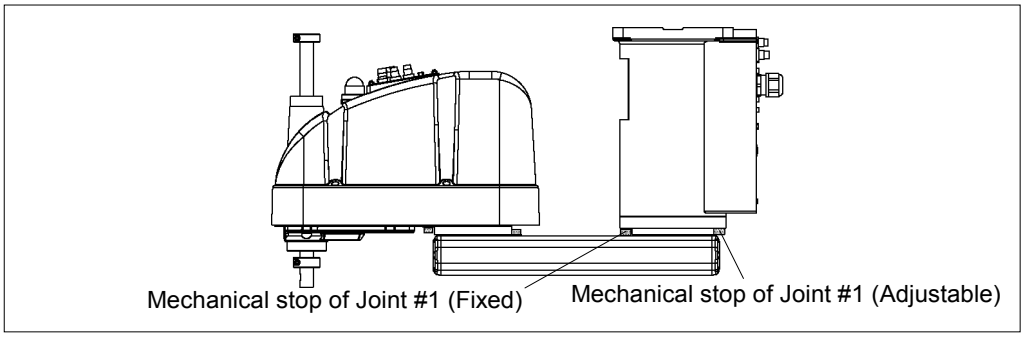

* The different mechanical stop positions from Table Top mounting are indicated for Wall mounting and Ceiling mounting.

5.2.1 Setting the Mechanical Stops of Joints #1 and #2

Both Joints #1 and #2 have threaded holes in the positions corresponding to the angle for the mechanical stop settings. Install the bolts in the holes corresponding to the angle that you want to set.

Joint #1 Mechanical Stops

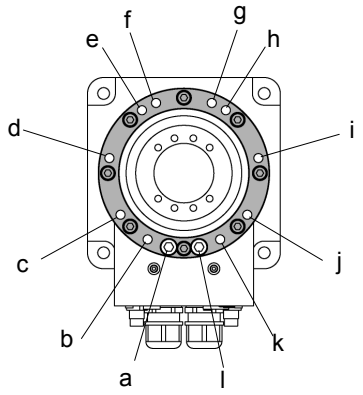

Joint #1

Mounting	Arm Length	a	b	c	d	e	f	g	h	i	j	k	l
Table Top	45, 55, 65	+152°	+135°	+105°	+60°	+20°	+5°	−5°	−20°	−60°	−105°	−135°	−152°
Ceiling	55, 65												
Wall	65		+148°									−148°	
	55		+135°									−135°	
Ceiling	45		+120°		+75°	+30°			−30°	−75°		−120°	
Wall	45												

Setting Angle	+152°	+148°	+135°	+120°	+105°	+75°	+60°
Pulse Value	7048761	6932253	6553600	6116694	5679787	4805974	4369067

Setting Angle	+30°	+20°	+5°	−5°	−20°	−30°	−60°
Pulse Value	3495254	3203983	2767076	2475805	2038898	1747627	873814

Setting Angle	−75°	−105°	−120°	−135°	−148°	−152°
Pulse Value	436907	−436907	−873814	−1310720	−1689373	−1805881

(°: degree)

Joint #2 Mechanical Stops

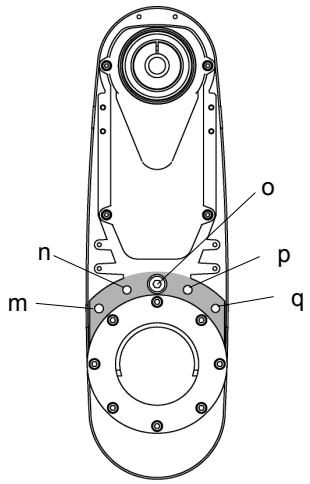

Joint #2

Model		Arm Length	m	n	o	p	q
Table Top, Ceiling, Wall		55, 65	+100°	+125°	+147.5°	−125°	−100°
Table Top	G6-45*S, D	45 (Z : 0 to –270)					
		45 (Z :–270 to –330)			+145°		
	G6-45*C, P, D bellows	45 (Z : 0 to –240)			+147.5°		
		45 (Z :–240 to –300)			+142°		
Ceiling, Wall		45			+130°		

The bellows for G6-***D* are options at shipment.

Setting Angle	+147.5°	+145°	+142°	+130°	+125°	+100°
Pulse Value	2685156	2639645	2585031	2366578	2275556	1820445

Setting Angle	−100°	−125°	−130°	−142°	−145°	−147.5°
Pulse Value	−1820445	−2275556	−2366578	−2585031	−2639644	−2685156

(°: degree)

(1) Turn OFF the Controller.

(2) Install a hexagon socket head cap bolt into the hole corresponding to the setting angle, and tighten it.

Joint	Hexagon socket head cap bolt (fully threaded)	The number of bolts	Recommended tightening torque
1	M10 × 20	1 bolt / one side	127.4 N·m (1300 kgf·cm)
2	M8 × 10		37.2 N·m (380 kgf·cm)

(3) Turn ON the Controller.

(4) Set the pulse range corresponding to the new positions of the mechanical stops.

NOTE

Be sure to set the pulse range inside the positions of the mechanical stop range.

Example: Using G6-**1S*
The angle of Joint #1 is set from −135 degrees to +135 degrees.
The angle of Joint #2 is set from −125 degrees to +125 degrees.

EPSON RC+

Execute the following commands from the [Command Window].

```
>JRANGE 1,-1310720,6553600   ' Sets the pulse range of Joint #1
>JRANGE 2,-2275556,+2275556 ' Sets the pulse range of Joint #2
>RANGE                       ' Checks the setting using Range
-1310720,6553600,-2275556,2275556,-1976708
    ,0,-1961226, 1961226
```

(5) Move the arm by hand until it touches the mechanical stops, and make sure that the arm does not hit any peripheral equipment during operation.

(6) Operate the joint changed at low speeds until it reaches the positions of the minimum and maximum pulse range. Make sure that the arm does not hit the mechanical stops. (Check the position of the mechanical stop and the motion range you set.)

Example: Using G6-**1S*
The angle of Joint #1 is set from −85 degrees to +115 degrees.
The angle of Joint #2 is set from −132 degrees to +132 degrees.

EPSON RC+

Execute the following commands from the [Command Window].

```
>MOTOR ON                    ' Turns ON the motor
>CP ON                       ' Enters low-power mode
>SPEED 5                     ' Sets at low speeds
>PULSE -1310720,0,0,0        ' Moves to the min. pulse position of Joint #1
>PULSE 6553600,0,0,0         ' Moves to the max. pulse position of Joint #1
>PULSE 2621440,-2275556,0,0 ' Moves to the min. pulse position of Joint #2
>PULSE 2621440,2275556,0,0  ' Moves to the max. pulse position of Joint #2
```

The Pulse command (Go Pulse command) moves all joints to the specified positions at the same time. Specify safe positions after considering motion of not only the joints whose pulse range have been changed, but also other joints.

In this example, Joint #1 is moved to the center of its motion range (pulse value: 2621440) when checking Joint #2.

If the arm is hitting the mechanical stops or if an error occurs after the arm hits the mechanical stops, either reset the pulse range to a narrower setting or extend the positions of the mechanical stops within the limit.

5.2.2 Setting the Mechanical Stop of Joint #3

NOTE

This method applies only to the Standard-model Manipulator (G6-***S*)/Protected-model Manipulator (G6-***D* without bellows option).
For the Cleanroom-model (G6-***C*) and Protected-model (G6-***D* with bellows option), the motion range set with the Joint #3 mechanical stop cannot be changed.

(1) Turn ON the Controller and turn OFF the motors using the Motor OFF command.

(2) Push up the shaft while pressing the brake release switch.

Do not push the shaft up to its upper limit or it will be difficult for the arm top cover to be removed. Push the shaft up to a position where the Joint #3 mechanical stop can be changed.

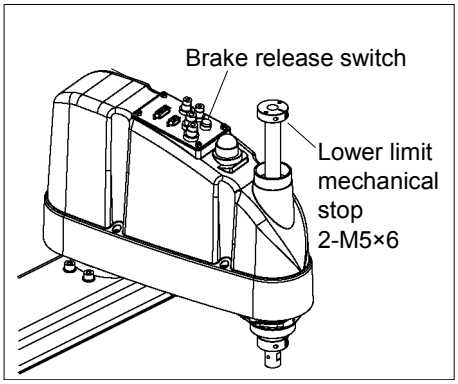

NOTE

When you press the brake release switch, the shaft may lower and rotate due to the weight of the end effector. Be sure to hold the shaft by hand while pressing the button.

(3) Turn OFF the Controller.

(4) Loosen the lower limit mechanical stop screw (M4×15).

NOTE

A mechanical stop is mounted on both the top and bottom of Joint #3. However, only the position of the lower limit mechanical stop on the top can be changed. Do not remove the upper limit mechanical stop on the bottom because the calibration point of Joint #3 is specified using the stop.

(5) The upper end of the shaft defines the maximum stroke. Move the lower limit mechanical stop down by the length you want to limit the stroke.
For example, when the lower limit mechanical stop is set at “150 mm” stroke, the lower limit Z coordinate value is “−150”. To change the value to “−100”, move the lower limit mechanical stop down “50 mm”. Use calipers to measure the distance when adjusting the mechanical stop.

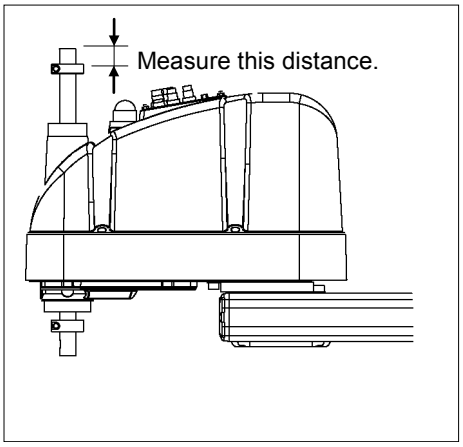

(6) Firmly tighten two lower limit mechanical stop screws (M4 × 15) so that they do not enter the shaft groove.
Recommended tightening torque: 4.9 N·m (50 kgf·cm)

(7) Turn ON the Controller.

(8) Move Joint #3 to its lower limit while pressing the brake release switch, and then check the lower limit position. Do not lower the mechanical stop too far. Otherwise, the joint may not reach a target position.

(9) Calculate the lower limit pulse value of the pulse range using the formula shown below and set the value.

The result of the calculation is always negative because the lower limit Z coordinate value is negative.

G6-**1S (Z: 150mm) Lower limit of pulse = lower limit Z coordinate value / 20 × 131072 × (62 / 37) G6-**4S (Z: 300mm) Lower limit of pulse = lower limit Z coordinate value / 40 × 131072 × (62 / 37)

Example: When lowering the mechanical stop by 50 mm and changing the lower limit Z coordinate value to "−100" in 150 mm stroke
(−100) / 20 × 131072 × (62 / 37) = − 1098171

EPSON RC+

Execute the following command from the [Command Window].

```
>JRANGE 3,-1098171,0        ' Sets the pulse range of Joint #3
```

(10) Using the Pulse command (Go Pulse command), move Joint #3 to the lower limit position of the pulse range at low speed. If the mechanical stop range is less than the pulse range, Joint #3 will hit the mechanical stop and an error will occur. When the error occurs, either change the pulse range to a lower setting or extend the position of the mechanical stop within the limit.

The clearance between the lower-limit pulse position and the mechanical stop should be approximately 5 mm.

NOTE ☞

If it is difficult to check whether Joint #3 hits a mechanical stop, turn OFF the Controller and lift the arm top cover to check the condition causing the problem from the side.
For details on removing the top cover, refer to *Maintenance: 3.1 Arm Top Cover*.
Example: When lowering the mechanical stop by 50 mm and changing the lower limit Z coordinate value to "−100" in 150 mm stroke

EPSON RC+

Execute the following commands from the [Command Window].

```
>MOTOR ON                 ' Turns ON the motor
>SPEED 5                  ' Sets low speed
>PULSE 0,0,-1098171,0     ' Moves to the lower limit-pulse position of Joint #3.
                            (In this example, all pulses except those for Joint #3 are "0". Substitute these "0s" with the other pulse values specifying a position where there is no interference even when lowering Joint #3.)
```

5.3 Setting the Cartesian (Rectangular) Range in the XY Coordinate System of the Manipulator (for Joints #1 and #2)

Use this method to set the upper and lower limits of the X and Y coordinates.

This setting is only enforced by software. Therefore, it does not change the physical range. The maximum physical range is based on the position of the mechanical stops.

EPSON RC+

Set the XYLim setting on the [XYZ Limits] panel shown by selecting [Tools]-[Robot Manager].
(You may also execute the XYLim command from the [Command Window].)

5.4 Standard Motion Range

The following "motion range" diagrams show the standard (maximum) specification. When each Joint motor is under servo control, the center of Joint #3's (shaft's) lowest point moves in the areas shown in the figure.

"Area limited by mechanical stop" is the area where the center of Joint #3's lowest point can be moved when each joint motor is not under servo control.

"Mechanical stop" sets the limited motion range so that the center of Joint #3 cannot move beyond the area mechanically.

"Maximum space" is the area that contains the farthest reach of the arms. If the maximum radius of the end effector is over 60 mm, add the "Area limited by mechanical stop" and "radius of the end effector". The total value is specified as the maximum area.

Table Top Mounting

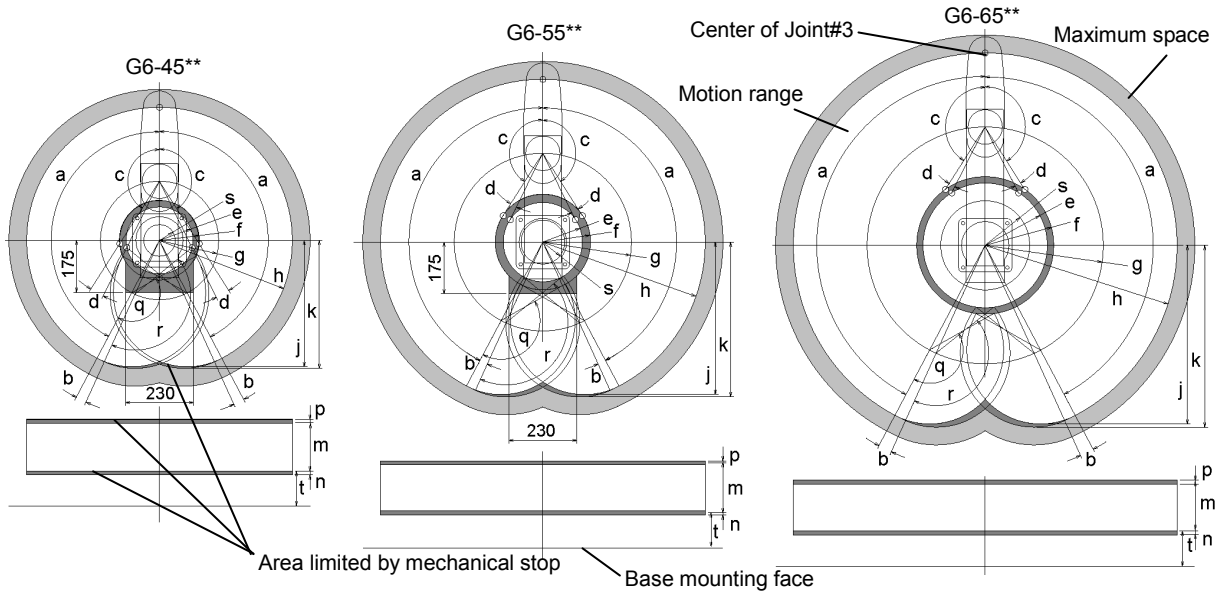

(°: degree)

		a	b	c	d	e	f	g	h	j	k
G6-45*S, D	Z 0 to –270	152°	3.5°	147.5°	3°	124.4	134.8	200	450	426.6	432
	Z –270 to –330			145°	5.5°		143.5				
G6-45*C, P, D bellows	Z 0 to –240			147.5°	3°		134.8				
	Z –240 to –300			142°	8.5°		153.9				
G6-55**				147.5°	6.3°	133.8	161.2	300	550	514.9	523
G6-65**						207.5	232	400	650	603.2	614

		q	r	s
G6-45*S, D	Z 0 to –270	147.5°	150.5°	64.4
	Z –270 to –330	145°		
G6-45*C, P, D bellows	Z 0 to –240	147.5°		
	Z –240 to –300	142°		
G6-55**		147.5°	153.8°	73.8
G6-65**				147.5

	m	n	p	t
G6-**1S, D	180	4.2	12.2	119
G6-**3S, D	330			–31
G6-**1C, P, D bellows	150	1.2	4.2	116
G6-**3C, P, D bellows	300			–34

The bellows for G6-***D* are options at shipment.

NOTE ☞ In the range Z: 0 to –270 mm, the area is limited by interference of the Manipulator body and the arm.

Wall Mounting

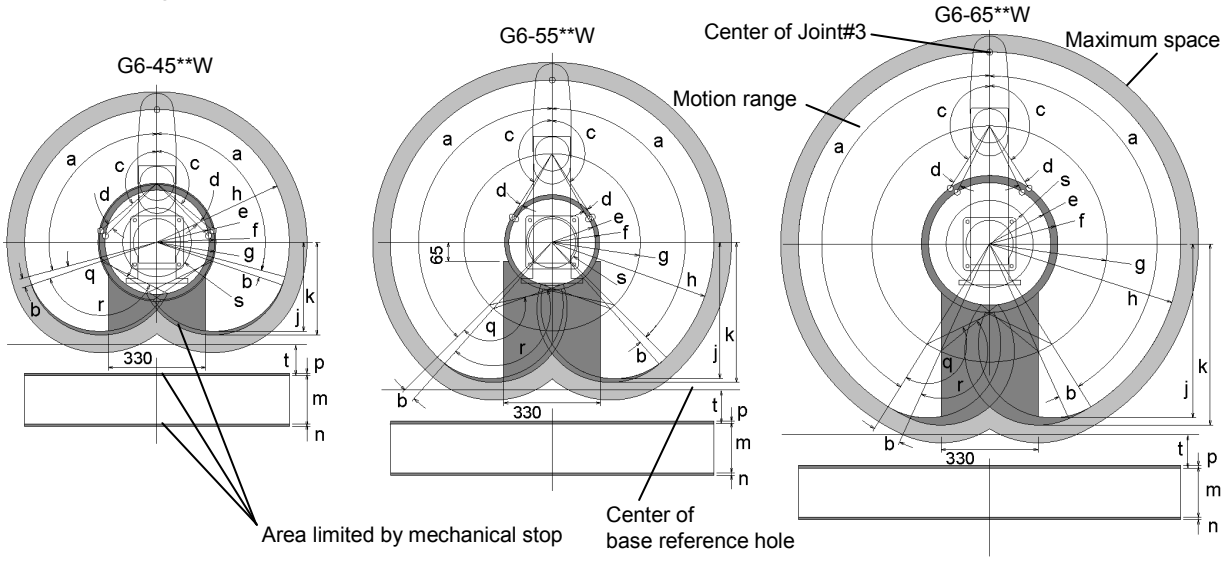

(°: degree)

	a	b	c	d	e	f	g	h
G6-45**W	105°	3.5°	130°	3.8°	182.4	195.5	200	450
G6-55*SW, DW	135°		147.5°	3.3°	146.8	161.2	300	550
G6-55*CW, PW, DW bellows			145°	5.8°		172.1		
G6-65**W	148°	7.5°	147.5°	6.3°	207.5	232	400	650

	j	k	q	r	s
G6-45**W	301.8	313.5	130°	133.8°	122.4
G6-55*SW, DW	462.1	474.7	147.5°	150.8°	86.8
G6-55*CW, PW, DW bellows			145°		
G6-65**W	589.2	614	147.5°	153.8°	147.5

	m	n	p	t
G6-**1SW, DW	180	4.2	12.2	160
G6-**3SW, DW bellows	330			
G6-**1CW, PW, DW	150	1.2	4.2	193
G6-**3CW, PW, DW bellows	300			

The bellows for G6-***DW are options at shipment.

Ceiling Mounting

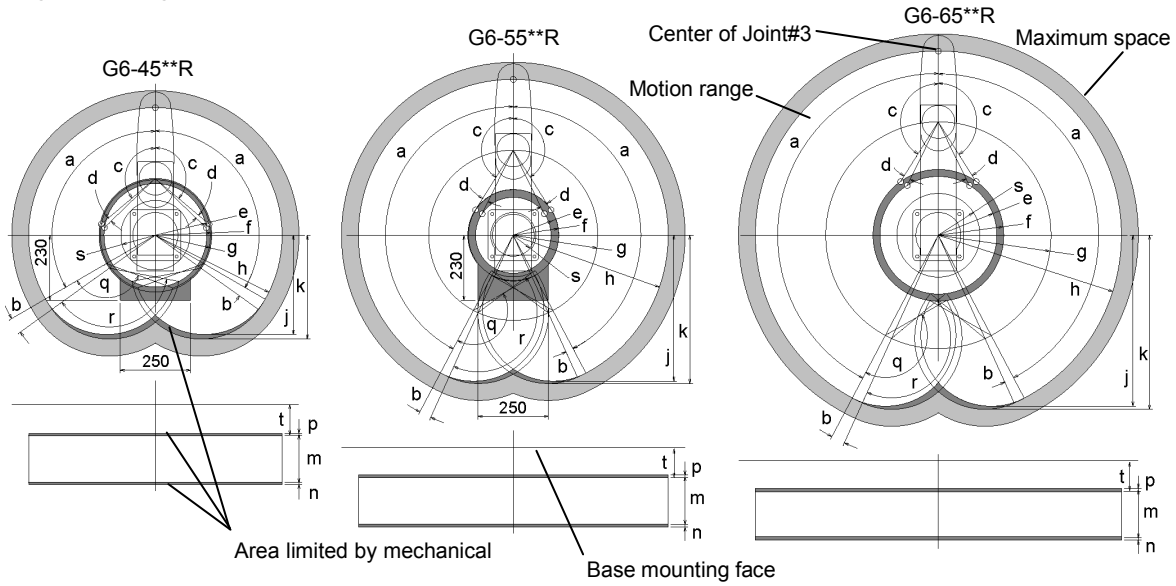

(°: degree)

	a	b	c	d	e	f	g	h	j	k
G6-45**R	120°	5.5°	130°	3.8°	182.4	195.5	200	450	350	366.1
G6-55*SR, DR	152°	3.5°	147.5°	3.3°	146.8	161.2	300	550	514.9	523
G6-55*CR, PR, DR bellows			145°	5.8°		172.1				
G6-65**R			147.5°	6.3°	207.5	232	400	650	603.2	614

	q	r	s
G6-45**R	130°	133.8°	122.4
G6-55*SR, DR	147.5°	150.8°	86.8
G6-55*CR, PR, DR bellows	145°		
G6-65**R	147.5°	153.8°	147.5

	m	n	p	t
G6-**1SR, DR	180	4.2	12.2	–9
G6-**3SR, DR bellows	330			141
G6-**1CR	150	1.2	4.2	99
G6-**3CR	300			249
G6-**1PR, DR	150			102.5
G6-**3PR, DR bellows	300			252.5

The bellows for G6-***DR are options at shipment.

Maintenance

This volume contains maintenance procedures with safety precautions for G6 series Manipulators.

1. Safety Maintenance

Please read this chapter, this manual, and other relevant manuals carefully to understand safe maintenance procedures before performing any routine maintenance.

Only authorized personnel who have taken safety training should be allowed to maintain the robot system.
Safety training is the program for industrial robot operators that follows the laws and regulations of each nation.
The personnel who have taken safety training acquire knowledge of industrial robots (operations, teaching, etc.), knowledge of inspections, and knowledge of related rules/regulations.
The personnel who have completed the robot system-training and maintenance-training classes held by the manufacturer, dealer, or locally-incorporated company are allowed to maintain the robot system.

WARNING	■ Do not remove any parts that are not covered in this manual. Follow the maintenance procedure strictly as described in this manual. Improper removal of parts or improper maintenance may not only cause improper function of the robot system but also serious safety problems. ■ Keep away from the Manipulator while the power is ON if you have not taken the training courses. Do not enter the operating area while the power is ON. Entering the operating area with the power ON is extremely hazardous and may cause serious safety problems as the Manipulator may move even it seems to be stopped. ■ When you check the operation of the Manipulator after replacing parts, be sure to check it while you are outside of the safeguarded area. Checking the operation of the Manipulator while you are inside of the safeguarded area may cause serious safety problems as the Manipulator may move unexpectedly. ■ Before operating the robot system, make sure that both the Emergency Stop switches and safeguard switch function properly. Operating the robot system when the switches do not function properly is extremely hazardous and may result in serious bodily injury and/or serious damage to the robot system as the switches cannot fulfill their intended functions in an emergency.

WARNING	■ To shut off power to the robot system, pull out the power plug from the power source. Be sure to connect the AC power cable to a power receptacle. DO NOT connect it directly to a factory power source. ■ Before performing any replacement procedure, turn OFF the Controller and related equipment, and then pull out the power plug from the power source. Performing any replacement procedure with the power ON is extremely hazardous and may result in electric shock and/or malfunction of the robot system.

⚠ CAUTION	■ Be sure to connect the cables properly. Do not allow unnecessary strain on the cables. (Do not put heavy objects on the cables. Do not bend or pull the cables forcibly.) The unnecessary strain on the cables may result in damage to the cables, disconnection, and/or contact failure. Damaged cables, disconnection, or contact failure is extremely hazardous and may result in electric shock and/or improper function of the robot system.

2. General Maintenance

This chapter describes maintenance inspections and procedures. Performing maintenance inspections and procedures properly is essential for preventing trouble and ensuring safety. Be sure to perform the maintenance inspections in accordance with the schedule.

2.1 Maintenance Inspection

2.1.1 Schedule for Maintenance Inspection

Inspection points are divided into five stages: daily, monthly, quarterly, biannual, and annual. The inspection points are added every stage.
If the Manipulator is operated for 250 hours or longer per month, the inspection points must be added every 250 hours, 750 hours, 1500 hours, and 3000 hours operation.

	Inspection Point					
	Daily inspection	Monthly inspection	Quarterly inspection	Biannual inspection	Annual inspection	Overhaul (replacement)
1 month (250 h)	Inspect every day	√				
2 months (500 h)		√				
3 months (750 h)		√	√			
4 months (1000 h)		√				
5 months (1250 h)		√				
6 months (1500 h)		√	√	√		
7 months (1750 h)		√				
8 months (2000 h)		√				
9 months (2250 h)		√	√			
10 months (2500 h)		√				
11 months (2750 h)		√				
12 months (3000 h)		√	√	√	√	
13 months (3250 h)		√				
⋮	⋮	⋮	⋮	⋮	⋮	⋮
20000 h						√

h = hour

2.1.2 Inspection Point

Inspection While the Power is OFF (Manipulator is not operating)

Inspection Point	Inspection Place	Daily	Monthly	Quarterly	Biannual	Annual
Check looseness or backlash of bolts, screws. Tighten them if necessary. (For the tightening torque, refer to *Maintenance: 2.4 Tightening Hexagon Socket Head Cap Bolts*.)	End effector mounting bolts	√	√	√	√	√
	Manipulator mounting bolts	√	√	√	√	√
	Each arm locking bolts	√	√	√	√	√
	Bolts, screws around shaft					√
	Bolts/screws securing motors, reduction gear units, etc.					√
Check looseness of connectors. If the connectors are loosen, push it securely or tighten.	External connectors on Manipulator (on the connector plates etc.)	√	√	√	√	√
	Manipulator cable unit		√	√	√	√
Visually check for external defects. Clean up if necessary.	External appearance of Manipulator	√	√	√	√	√
	External cables		√	√	√	√
Check for bends or improper location. Repair or place it properly if necessary.	Safeguard etc.	√	√	√	√	√
Check tension of timing belts. Tighten it if necessary.	Inside of Arm #2				√	√
Grease conditions	Refer to *Maintenance: 2.3 Greasing*.					
Battery	Refer to *Maintenance: 11. Lithium Battery*					

Inspection While the Power is ON (Manipulator is operating)

Inspection Point	Inspection Place	Daily	Monthly	Quarterly	Biannual	Annual
Check motion range	Each joint					√
Move the cables back and forth lightly to check whether the cables are disconnected.	External cables (including cable unit of the Manipulator)				√	√
Push each arm in MOTOR ON status to check whether backlash exists.	Each arm					√
Check whether unusual sound or vibration occurs.	Whole	√	√	√	√	√
Measure the accuracy repeatedly by a gauge.	Whole					√
Turn ON and OFF the Brake Release switch and check the sound of the electromagnetic brake. If there is no sound, replace the brake.	Brake	√	√	√	√	√

2.2 Overhaul (Parts Replacement)

CAUTION	■ Overhaul timing is based on an assumption that all joints are operated for equal distance. If a particular joint has a high duty or high load, it is recommended to overhaul all joints (as many as possible) before exceeding 20,000 operation hours with the joint as a basis.

The parts for the manipulator joints may cause accuracy decline or malfunction due to deterioration of the manipulator resulting from long term use. In order to use the manipulator for a long term, it is recommended to overhaul the parts (parts replacement).

The time between overhauls is 20,000 operation hours of the Manipulator as a rough indication.

However, it may vary depending on usage condition and degree of the load (such as when operated with the maximum motion speed and maximum acceleration / deceleration in continuous operation) applied on the Manipulator.

NOTE

For the EPSON RC+ 7.0 Ver. 7.2.x or later (firmware Ver.7.2.x.x or later), the recommended replacement time for the parts subject to maintenance (motors, reduction gear units, and timing belts) can be checked in the [Maintenance] dialog box of the EPSON RC+ 7.0.
For details, refer to the following manual.
Robot Controller RC700 / RC700-A "Maintenance 6. Alarm"

NOTE

For the EPSON RC+ 5.0 Ver. 5.4.7 or later (firmware Ver.1.16.4.x or 1.24.4.x or later), the recommended replacement time for the parts subject to maintenance (motors, reduction gear units, and timing belts) can be checked in the [Maintenance] dialog box of the EPSON RC+ 5.0.

For details, refer to the following manual.
Robot Controller RC180 "Appendix. Alarm"

Note:
The recommended replacement time for the maintenance parts is when it reaches the L10 life (time until 10% failure probability). In the [Maintenance] dialog box, the L10 life is displayed as 100%.

The manipulator operation hours can be checked in [Controller Status Viewer] dialog -[Motor On Hours].

(1) Select EPSON RC+ menu-[Tools]-[Controller] to open the [Controller Tools] dialog.

(2) Click the <View Controller Status> button to open the [Browse For Folder] dialog.

(3) Select the folder where the information is stored.

(4) Click <OK> to view the [Controller Status Viewer] dialog.

(5) Select [Robot] from the tree menu on the left side (Dialog image: EPSON RC+ 7.0)

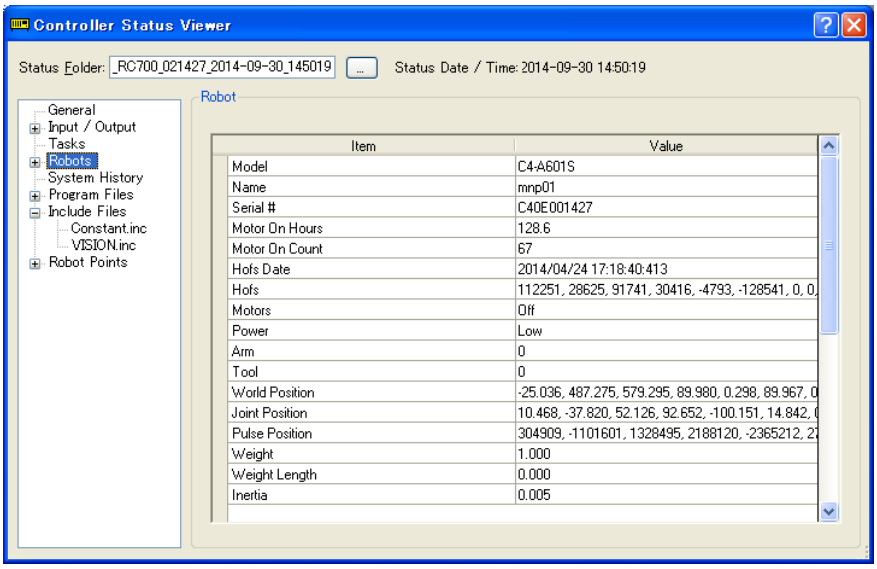

For the parts subject to overhaul, refer to *Maintenance 14. Maintenance Parts List.*

For details of replacement of each part, refer to the *Maintenance* section.

Please contact the distributor of your region for further information.

2.3 Greasing

The ball screw spline and reduction gear units need greasing regularly. Only use the grease specified in the following table.

CAUTION	■ Keep enough grease in the Manipulator. Operating the Manipulator with insufficient grease will damage sliding parts and/or result in insufficient function of the Manipulator. Once the parts are damaged, a lot of time and money will be required for the repairs.

CAUTION	■ If grease gets into your eyes, mouth, or on your skin, follow the instructions below. If grease gets into your eyes : Flush them thoroughly with clean water, and then see a doctor immediately. If grease gets into your mouth : If swallowed, do not induce vomiting. See a doctor immediately. : If grease just gets into your mouth, wash out your mouth with water thoroughly. If grease gets on your skin : Wash the area thoroughly with soap and water.

	Greasing part	Greasing Interval	Grease	Refer to *Maintenance*:
Joint #1 Joint #2	Reduction gear units	Overhaul timing	SK-1A	*5.2 Replacing the Joint #1 Reduction Gear Unit* *6.2 Replacing the Joint #2 Reduction Gear Unit*
Joint #3	Ball screw spline unit	At 100 km of operation (50 km for first greasing)	AFB	*10.1 Greasing the Ball Screw Spline Unit*

Joint #1, 2 reduction gear units

As a rough indication, perform greasing at the same timing as overhaul.
However, it may vary depending on usage condition and degree of the load (such as when operated with the maximum motion speed and maximum acceleration / deceleration in continuous operation) applied on the Manipulator.

Joint #3 Ball screw spline unit

The recommended greasing interval is at 100 km of operation. However, greasing timing also can be checked from the grease condition. Perform greasing if the grease is discolored or becomes dry.

Normal grease

Discolored grease

Perform greasing at 50 km of operation for the first time of greasing.

NOTE

For the EPSON RC+ 7.0 Ver. 7.2.x or later (firmware Ver.7.2.x.x or later), the recommended replacement time for the grease on the ball screw spline unit can be checked in the [Maintenance] dialog box of the EPSON RC+ 7.0.
For details, refer to the following manual.
Robot Controller RC700 / RC700-A "Maintenance 6. Alarm"

NOTE

For the EPSON RC+ 5.0 Ver. 5.4.7 or later (firmware Ver.1.16.4.x or 1.24.4.x or later), the recommended replacement time for the grease can be checked in the [Maintenance] dialog box of the EPSON RC+ 5.0.

For details, refer to the following manual.
Robot Controller RC180 "Appendix. Alarm"

2.4 Tightening Hexagon Socket Head Cap Bolts

Hexagon socket head cap bolts are used in places where mechanical strength is required. (A hexagon socket head cap bolt will be called a “bolt” in this manual.) These bolts are fastened with the tightening torques shown in the following table.

When it is necessary to refasten these bolts in some procedures in this manual (except special cases as noted), use a torque wrench so that the bolts are fastened with the appropriate tightening torques as shown below.

Bolt	Tightening Torque
M3	2.0 ± 0.1 N·m (21 ± 1 kgf·cm)
M4	4.0 ± 0.2 N·m (41 ± 2 kgf·cm)
M5	8.0 ± 0.4 N·m (82 ± 4 kgf·cm)
M6	13.0 ± 0.6 N·m (133 ± 6 kgf·cm)
M8	32.0 ± 1.6 N·m (326 ± 16 kgf·cm)
M10	58.0 ± 2.9 N·m (590 ± 30 kgf·cm)
M12	100.0 ± 5.0 N·m (1,020 ± 51 kgf·cm)

Refer below for the set screw.

Set Screw	Tightening Torque
M4	2.4 ± 0.1 N·m (26 ± 1 kgf·cm)
M5	3.9 ± 0.2 N·m (40 ± 2 kgf·cm)

The bolts aligned on a circumference should be fastened in a crisscross pattern as shown in the figure below.

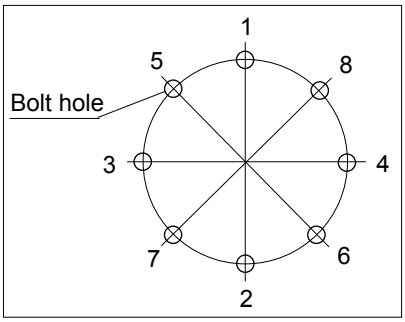

Do not fasten all bolts securely at one time. Divide the number of times that the bolts are fastened into two or three and fasten the bolts securely with a hexagonal wrench. Then, use a torque wrench so that the bolts are fastened with tightening torques shown in the table above.

2.5 Matching Origins

After parts have been replaced (motors, reduction gear units, a brake, timing belts, a ball screw spline unit, etc.), the Manipulator cannot operate properly because a mismatch exists between the origin stored in each motor and its corresponding origin stored in the Controller. After replacing the parts, it is necessary to match these origins.

For calibration, the pulse values for a specific position must be recorded in advance.
Before replacing parts, select easy point (pose) data from the registered point data to check the accuracy. Then, follow the steps below to display the pulse values and record them.

EPSON RC+

Execute the following command from the [Command Window].

```
>PULSE
PULSE: [Joint #1 Pulse value] pls [Joint #2 Pulse value] pls [Joint #3 Pulse value]
pls [Joint #4 Pulse value] pls
```

2.6 Layout of Maintenance Parts

2.6.1 Table Top Mounting type

G6-***S : Standard-model

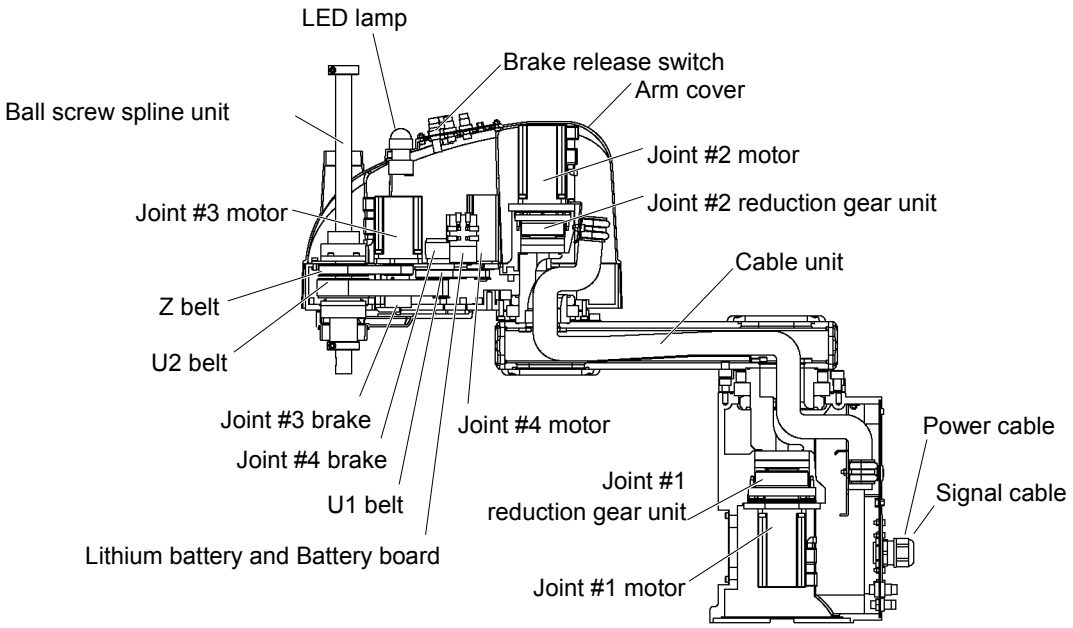

(Figure: G6-551S)

G6-***C : Cleanroom-model
G6-***D, P : Protected-model (D: With bellows option)

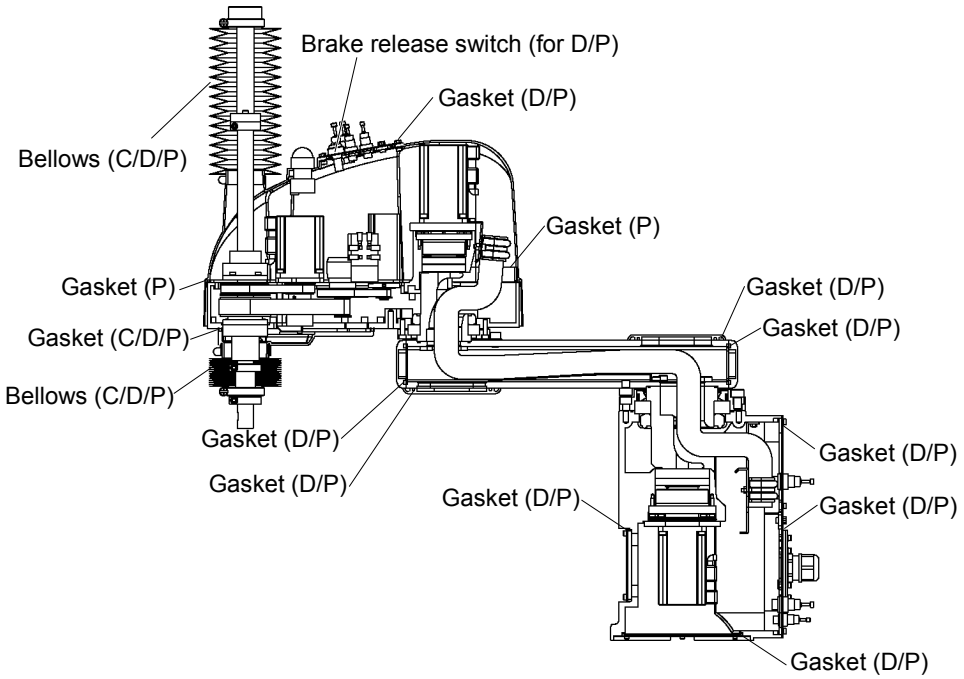

(Figure: G6-551P)

2.6.2 Wall Mounting type

G6-***SW : Standard-model

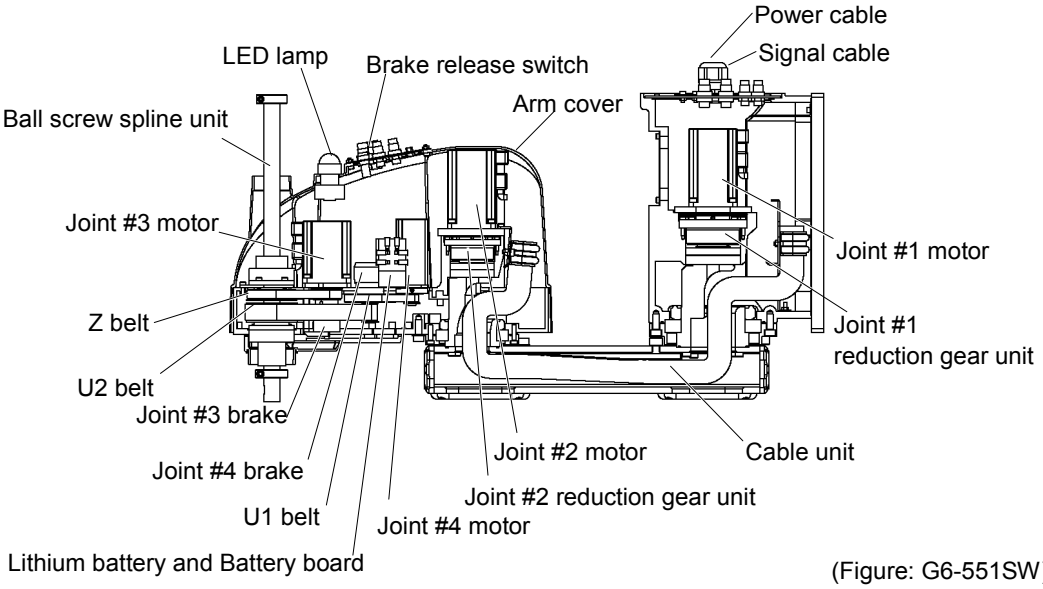

(Figure: G6-551SW)

G6-***CW : Cleanroom-model

G6-***DW, PW : Protected-model (D: With bellows option)

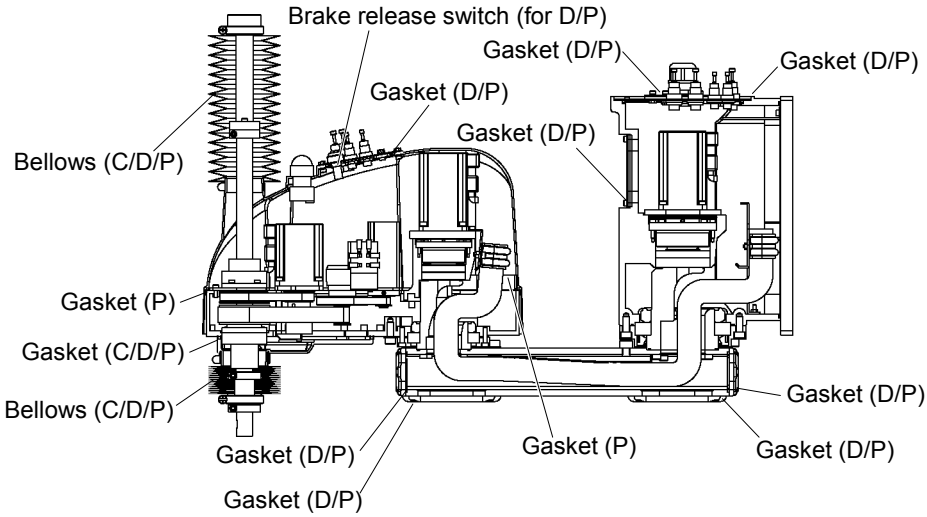

(Figure: G6-551PW)

2.6.3 Ceiling Mounting type

G6-***SR : Standard-model

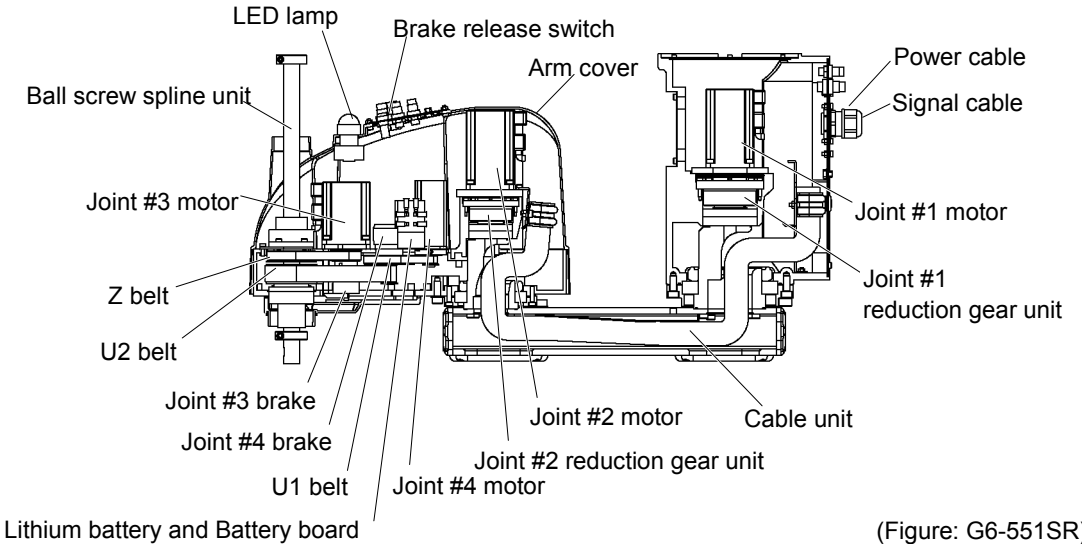

(Figure: G6-551SR)

G6-***CR : Cleanroom-model
G6-***DR, PR : Protected-model (D: With bellows option)

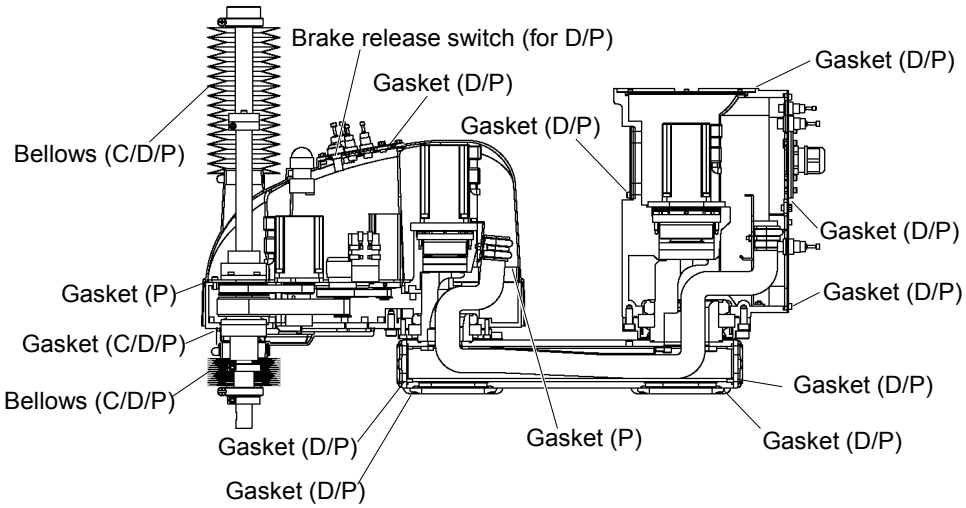

(Figure: G6-551PR)

3. Covers

All procedures for removing and installing covers in maintenance are described in this chapter.

WARNING	■ Do not insert or pull out the motor connectors while the power to the robot system is turned ON. Inserting or pulling out the motor connectors with the power ON is extremely hazardous and may result in serious bodily injury as the Manipulator may move abnormally, and also may result in electric shock and/or malfunction of the robot system. ■ To shut off power to the robot system, pull out the power plug from the power source. Be sure to connect the AC power cable to a power receptacle. DO NOT connect it directly to a factory power source. ■ Before performing any replacement procedure, turn OFF the Controller and related equipment, and then pull out the power plug from the power source. Performing any replacement procedure with the power ON is extremely hazardous and may result in electric shock and/or malfunction of the robot system. ■ Be careful not to get any foreign substances in the Manipulator, connectors, and pins during maintenance. Turning ON the power to the robot system when any foreign substances exist in them is extremely hazardous and may result in electric shock and/or malfunction of the robot system.

	Name	Quantity	Note	
Maintenance parts	Gasket unit	1	R13B031226	Only for Cleanroom-model and Protected-model
	Arm #2 Gasket	1	R13B031227	Only for Cleanroom-model and Protected-model
	Silicon adhesive (for the gasket on the Connector Plate)	1		Only for Table top mounting and Ceiling mounting / Protected-model
Tools	Hexagonal wrench (width across flats: 2.5 mm)	1	For M3 screw	Only for Wall mounting / Cleanroom-model and Protected-model
	Hexagonal wrench (width across flats: 3 mm)	1	For M4 screw	Tightening Torque : 0.9 N·m (9.2 kgf·cm)
	Cross-point screwdriver	1	For bellows removal	Only for Cleanroom-model and Protected-model
	Wiping cloth	1	For wiping adhesive	

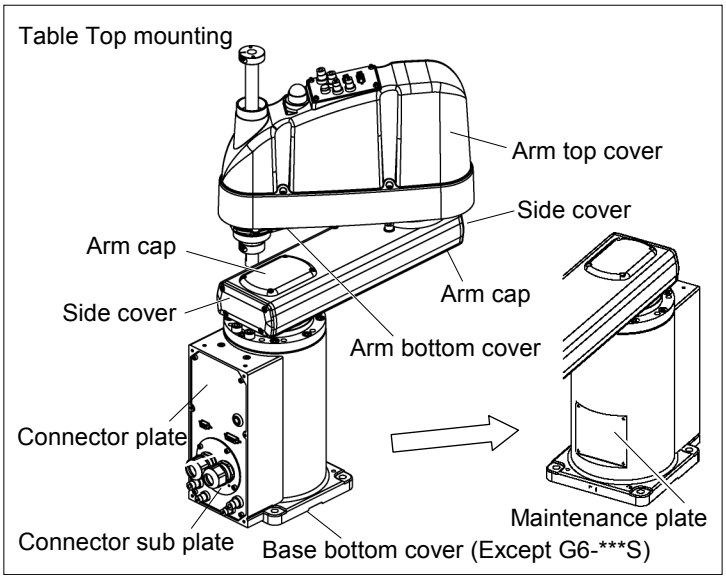
Table Top mounting
Arm top cover
Side cover
Arm cap
Arm cap
Side cover
Arm bottom cover
Connector plate
Maintenance plate
Connector sub plate
Base bottom cover (Except G6-***S)

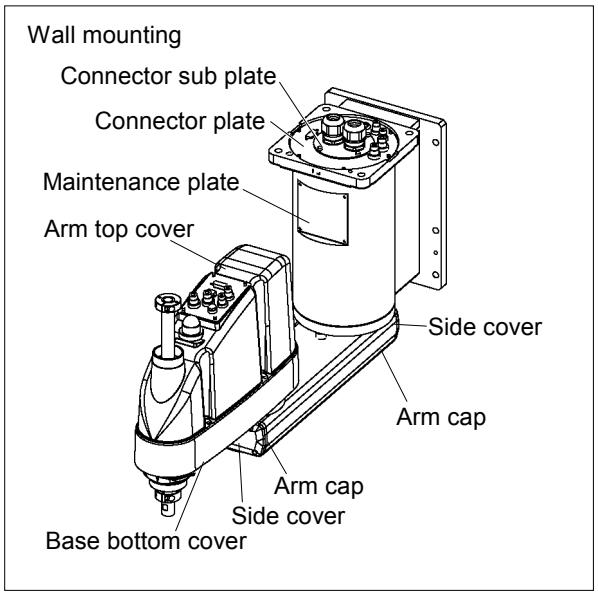
Wall mounting
Connector sub plate
Connector plate
Maintenance plate
Arm top cover
Side cover
Arm cap
Arm cap
Side cover
Base bottom cover

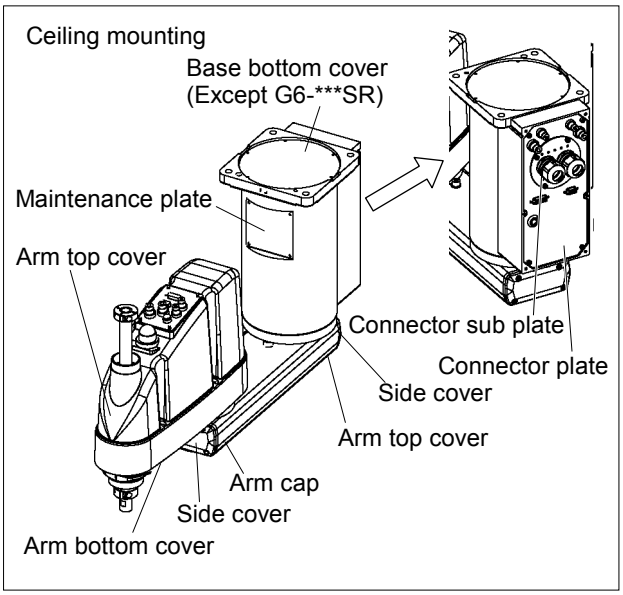
Ceiling mounting
Base bottom cover
(Except G6-***SR)
Maintenance plate
Arm top cover
Connector sub plate
Connector plate
Side cover
Arm top cover
Arm cap
Side cover
Arm bottom cover

3.1 Arm Top Cover

⚠ CAUTION	■ Do not remove the arm top cover forcibly. Removing the cover forcibly may result in damage to the cables, disconnection, and/or contact failure. Damaged cables, disconnection, or contact failure is extremely hazardous and may result in electric shock and/or improper function of the robot system. ■ When installing the cover, be careful not to allow the cables to interfere with the cover mounting and do not bend these cables forcibly to push them into the cover. Unnecessary strain on cables may result in damage to the cables, disconnection, and/or contact failure. Damaged cables, disconnection, or contact failure is extremely hazardous and may result in electric shock and/or improper function of the robot system. When routing the cables, observe the cable locations after removing the cover. Be sure to place the cables back to their original locations.

Arm Top Cover Removal

(1) Turn ON the Controller.

(2) Press and hold the brake release switch to let the shaft down. Be sure to keep enough space and prevent the end effector hitting any peripheral equipment.

NOTE ☞ The brake release switch affects both Joints #3 and #4. When the brake release switch is pressed, the brakes for both Joints #3 and #4 are released simultaneously. (Joint #4 brake is installed to G6-**3** only.)

Be careful of the shaft falling or rotation while the brake release switch is being pushed because it may be lowered by the weight of an end effector.

(3) Turn OFF the Controller.

(4) Unscrew the arm top cover mounting bolts, and then lift the cover.

NOTE ☞ When bellows are installed to the manipulator, remove the upper bellows and then remove the arm top cover. For bellows removal, refer to *Maintenance 9. Bellows*.

The cover cannot be removed completely because user wires and tubes are connected. However, you can continue regular maintenance.

LED lamp and the cable of the brake release switch are located between the main part and the cover. Do not pull the cable strong or the connector may be damaged.

G6-***S* (Standard-model)

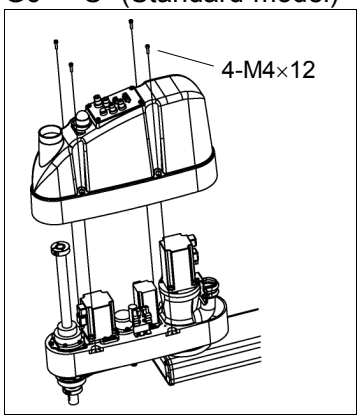

G6-***C* (Cleanroom-model),
G6-***D*, P* (Protected-model)

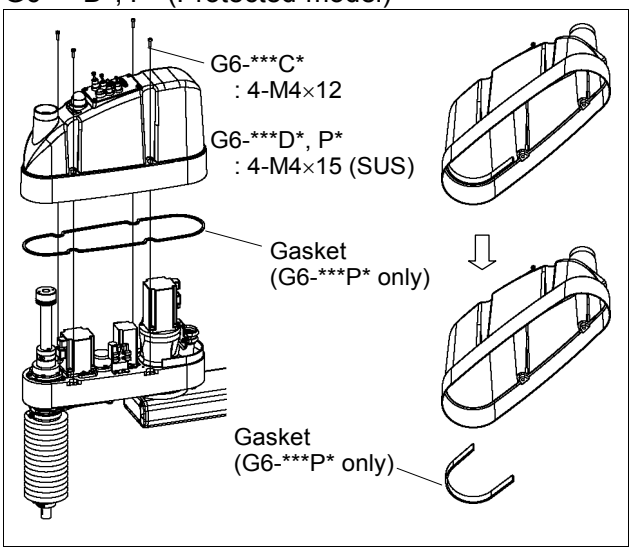

Gaskets are installed only to G6-***P*.

Arm Top Cover Installation

(1) Set the arm top cover to the arm and secure with the arm top cover mounting bolts.

After mounting the arm top cover, make sure that the lower limit mechanical stop does not touch the cylindrical part of the arm top cover.

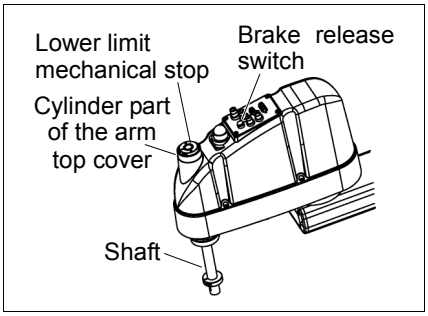

When bellows are installed to the manipulator, install the arm top cover and then install the upper bellows. For bellows installation, refer to *Maintenance 9. Bellows*.

3.2 Arm Bottom Cover

Unscrew the arm bottom cover mounting bolts, and then pull the cover downward and remove it.

NOTE ☞ The arm bottom cover may not be removed from the shaft because the end effector is installed.
If it is necessary to remove the cover completely (for replacement of the ball screw spline unit etc.), remove the end effector.

If it is not necessary to remove the cover completely, move the shaft to the lower limit, and lower the arm bottom cover. Then, perform maintenance or inspection.

When bellows are installed to the manipulator, remove or pull down the lower bellows and then remove the arm bottom cover. For bellows removal, refer to *Maintenance 9. Bellows*.

G6-***S* (Standard-model)

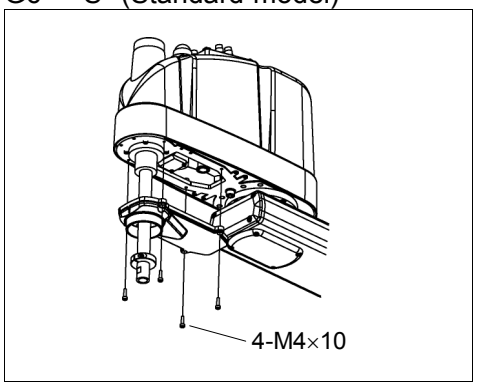

G6-***C* (Cleanroom-model)
G6-***D*, P* (Protected-model)

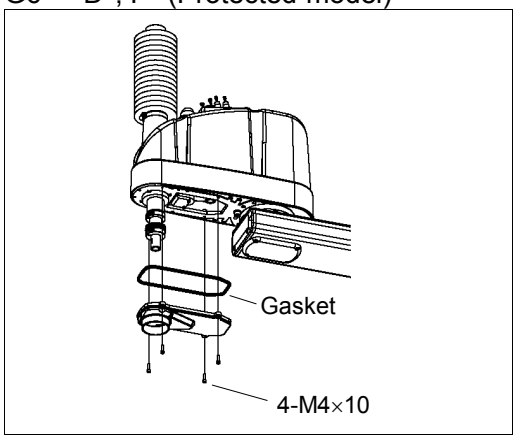

A gasket is installed to G6-***C* (Cleanroom-model) and G6-***D*, P* (Protected-model).

3.3 Arm #1 Cover

There are two sets of Arm #1 covers.

- Arm caps
- Side covers

Unscrew the bolts mounting the covers and the caps to remove them.

3.3.1 G6-***S* (Standard-model), G6-***C* (Cleanroom-model)

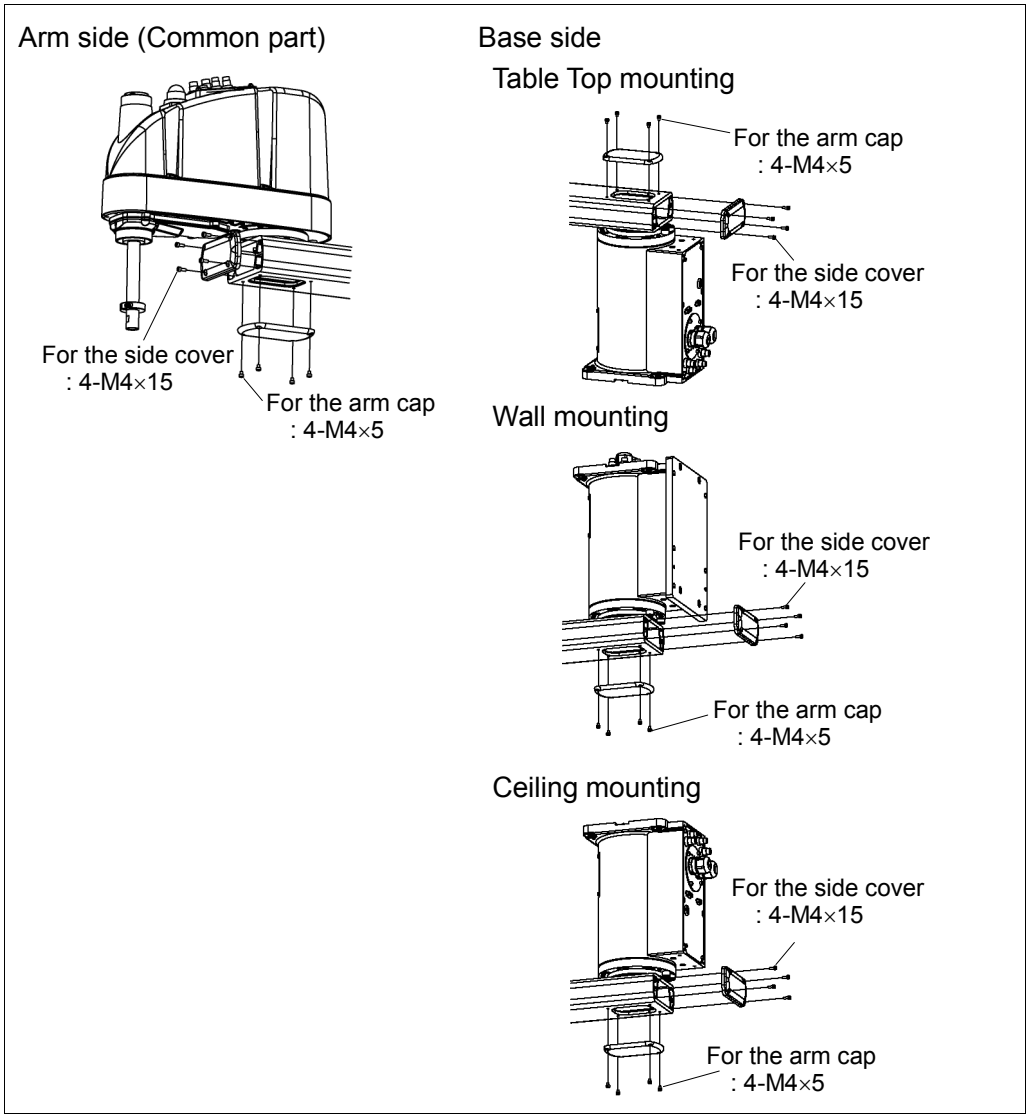

3.3.2 G6-***D*/P* (Protected-model)

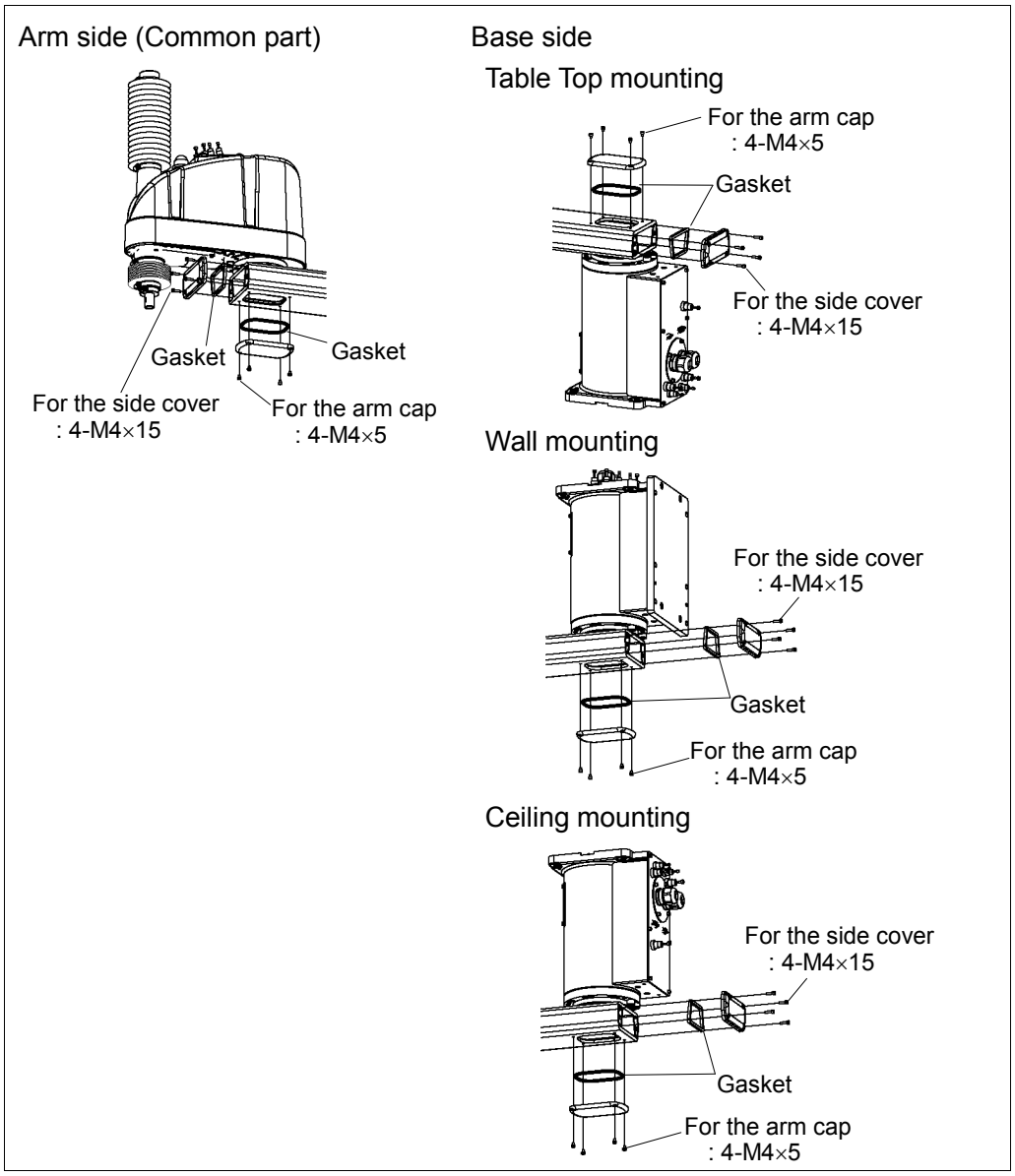

Gaskets are installed to G6-***D*, P* (Protected-model).

3.4 Connector Plate

CAUTION	■ Do not remove the connector plate forcibly. Removing the connector plate forcibly may result in damage to the cables, disconnection, and/or contact failure. Damaged cables, disconnection, or contact failure is extremely hazardous and may result in electric shock and/or improper function of the robot system. ■ When installing the connector plate, be careful not to allow the cables to interfere with the plate mounting and do not bend these cables forcibly to push them into the cover. Unnecessary strain on cables may result in damage to the cables, disconnection, and/or contact failure. Damaged cables, disconnection, or contact failure is extremely hazardous and may result in electric shock and/or improper function of the robot system. When routing the cables, observe the cable locations after removing the connector plate. Be sure to place the cables back to their original locations.

Unscrew the connector plate mounting bolts and remove the plate.

G6-***S* (Standard-model)
G6-***C* (Cleanroom-model)

G6-***D*, P* (Protected-model)

Table Top mounting

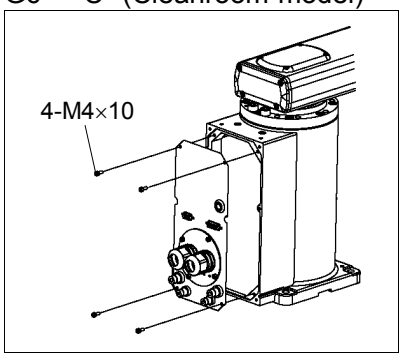

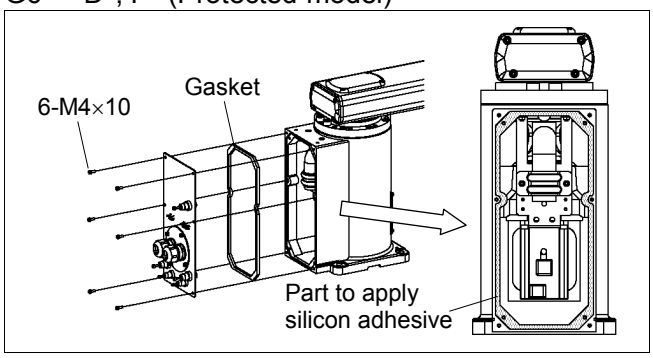

Wall mounting

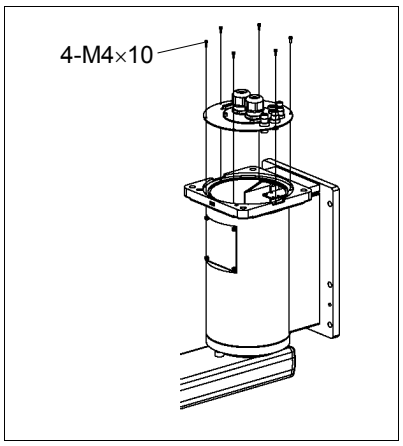

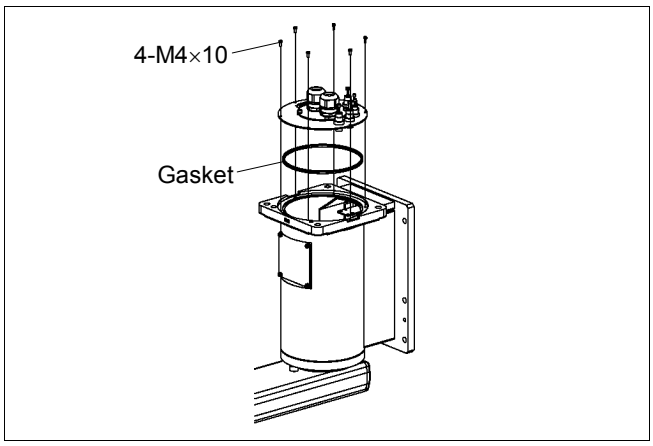

Ceiling mounting

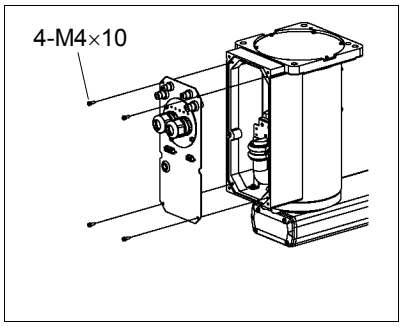

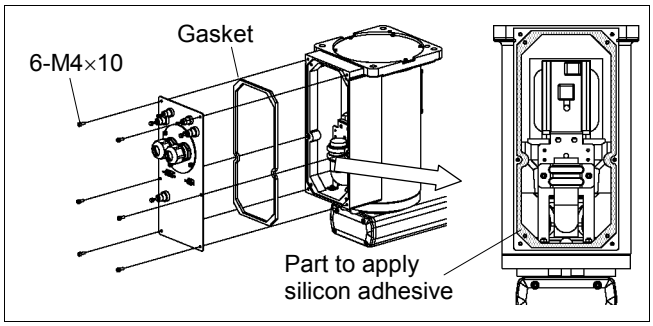

A gasket is installed to G6-***D*, P* (Protected-model).

NOTE ☞ When installing the gasket to Table Top mounting (G6-***D, P) or ceiling mounting (G6-***DR, PR), apply silicon adhesive to the gasket installing part on the base side (shaded part in the photo).

3.5 Connector Sub Plate

CAUTION	■ Do not remove the connector sub plate forcibly. Removing the connector sub plate forcibly may result in damage to the cables, disconnection, and/or contact failure. Damaged cables, disconnection, or contact failure is extremely hazardous and may result in electric shock and/or improper function of the robot system. ■ When installing the connector sub plate, be careful not to allow the cables to interfere with the plate mounting and do not bend these cables forcibly to push them into the cover. Unnecessary strain on cables may result in damage to the cables, disconnection, and/or contact failure. Damaged cables, disconnection, or contact failure is extremely hazardous and may result in electric shock and/or improper function of the robot system. When routing the cables, observe the cable locations after removing the connector sub plate. Be sure to place the cables back to their original locations.

Unscrew the connector sub plate mounting bolts and remove the plate.

G6-***S* (Standard-model)
G6-***C* (Cleanroom-model)

G6-***D*, P* (Protected-model)

Table Top mounting

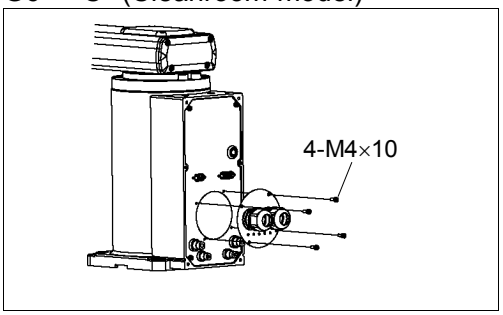

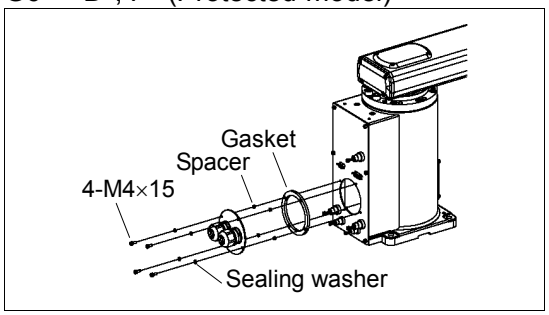

Wall mounting

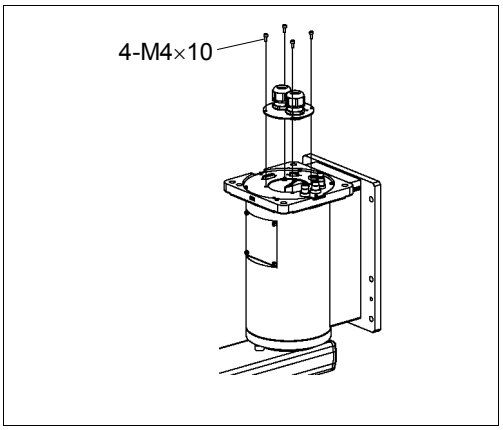

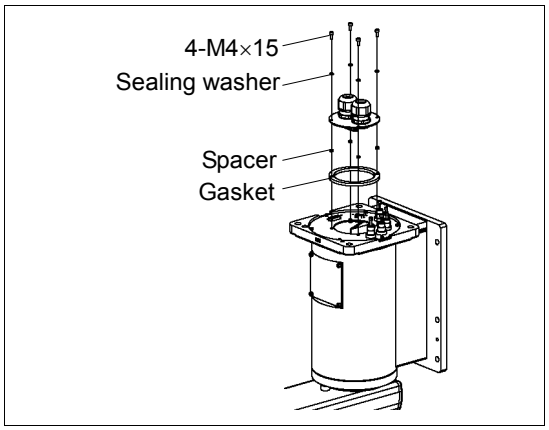

Ceiling mounting

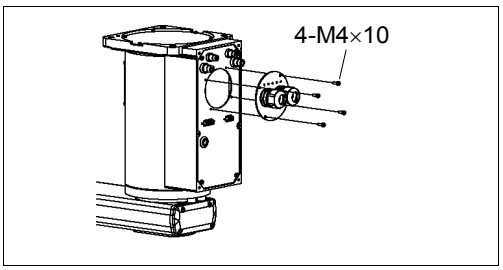

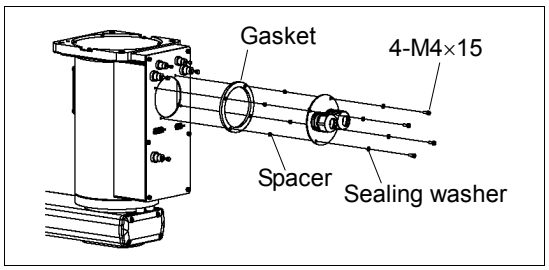

A gasket, spacers, and sealing washers are installed to G6-***D*, P* (Protected-model).

3.6 User Plate

Unscrew the user plate mounting bolts and remove the plate.

NOTE

Do not remove the nut by force. The nut for the user plate is combined with the user plate. And if you try to remove the nut, it will damage the user plate.

G6-***S* (Standard-model)
G6-***C* (Cleanroom-model)

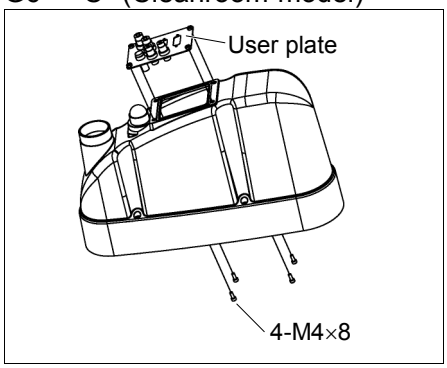

G6-***D*, P* (Protected-model)

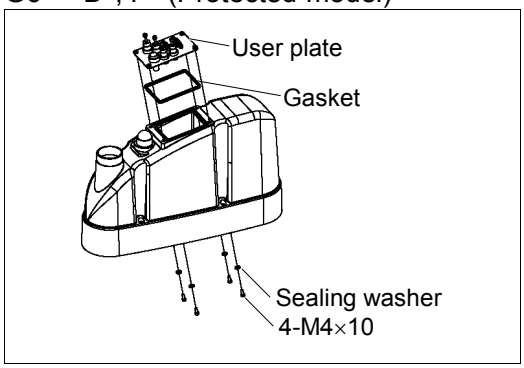

A gasket and sealing washers are installed to G6-***D*, P* (Protected-model).

3.7 Maintenance Plate

Unscrew the maintenance plate mounting bolts and remove the plate.

G6-***S* (Standard-model)
G6-***C* (Cleanroom-model)

G6-***D*, P* (Protected-model)

Table Top mounting

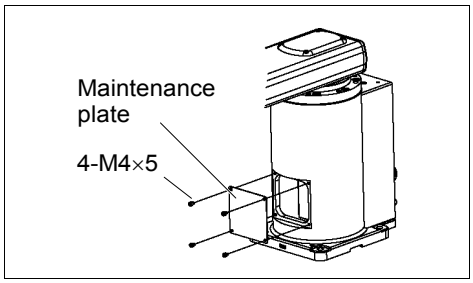

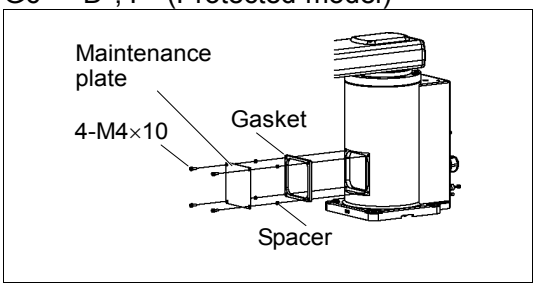

Wall mounting

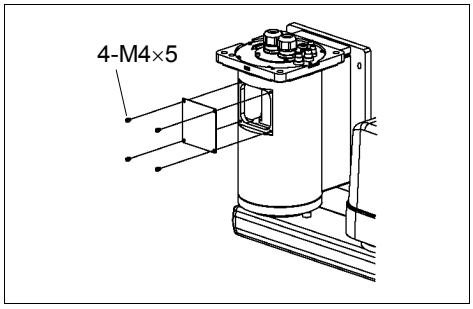

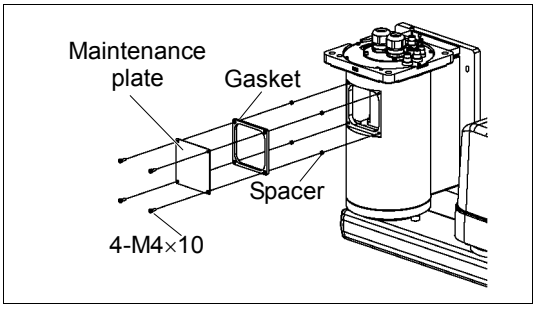

Ceiling mounting

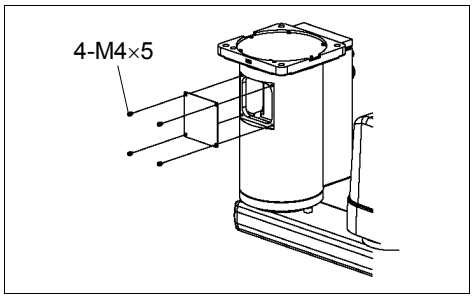

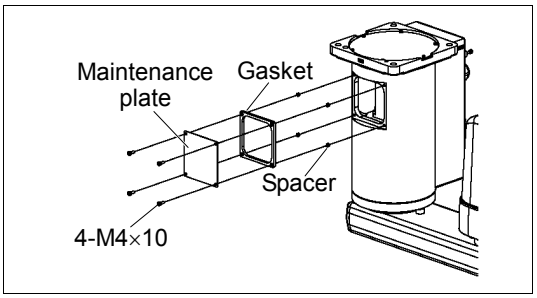

A gasket and spacers are installed to G6-***D*, P* (Protected-model).

3.8 Base Bottom Cover

The base bottom cover is removed only when replacing the gasket unit.

Unscrew the base bottom cover mounting bolts and remove the cover.

	G6-***C* (Cleanroom-model)	G6-***D*, P* (Protected-model)
Table Top mounting	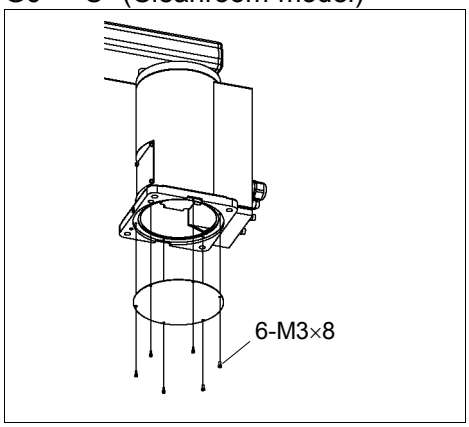	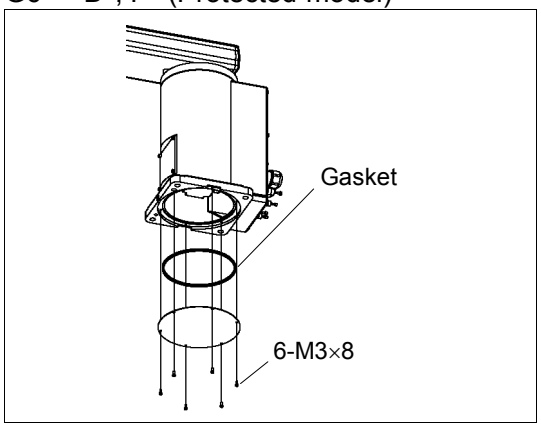
Ceiling mounting	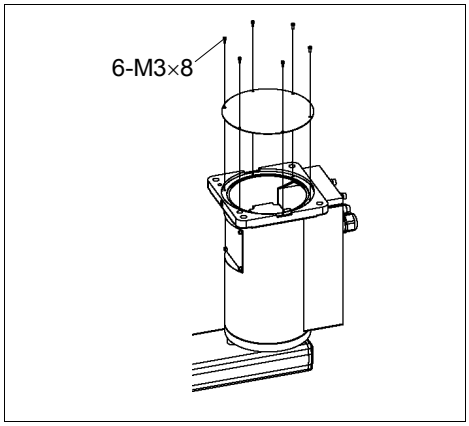	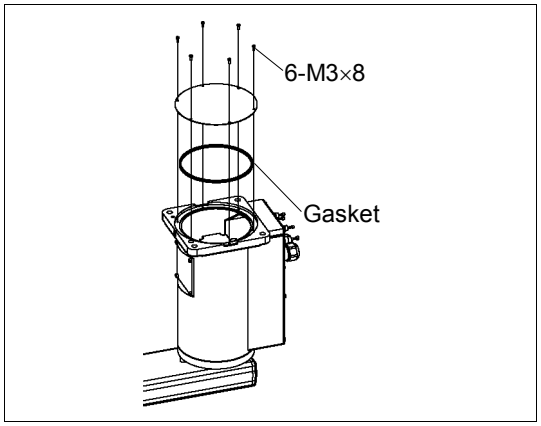

NOTE

A gasket is installed to G6-***D*, P* (Protected-model).

A base bottom cover is not installed to G6-***S* (Standard-model).

4. Cable

WARNING	■ Do not insert or pull out the motor connectors while the power to the robot system is turned ON. Inserting or pulling out the motor connectors with the power ON is extremely hazardous and may result in serious bodily injury as the Manipulator may move abnormally, and also may result in electric shock and/or malfunction of the robot system. ■ To shut off power to the robot system, pull out the power plug from the power source. Be sure to connect the AC power cable to a power receptacle. DO NOT connect it directly to a factory power source. ■ Before performing any replacement procedure, turn OFF the Controller and related equipment, and then pull out the power plug from the power source. Performing any replacement procedure with the power ON is extremely hazardous and may result in electric shock and/or malfunction of the robot system. ■ Be careful not to get any foreign substances in the Manipulator, connectors, and pins during maintenance. Turning ON the power to the robot system when any foreign substances exist in them is extremely hazardous and may result in electric shock and/or malfunction of the robot system.

CAUTION	■ Be sure to connect the cables properly. Do not allow unnecessary strain on the cables. (Do not put heavy objects on the cables. Do not bend or pull the cables forcibly.) The unnecessary strain on the cables may result in damage to the cables, disconnection, and/or contact failure. Damaged cables, disconnection, or contact failure is extremely hazardous and may result in electric shock and/or improper function of the robot system.

4.1 Replacing Cable Unit

Since the power is supplied to each motor from the lithium battery installed on the battery board via the battery connector, the position data will not be lost when the Controller is turned OFF. When the battery connectors are disconnected, the position data will be lost, and EPSON RC+ will display an error when the Controller is turned ON.

If the error occurs, execute the calibration of all joints and axes.
For details of the calibration, refer to *Maintenance: 13. Calibration.*

	Name		Quantity	Note
Maintenance parts	Cable unit		1	Each manipulator model *(Refer to Maintenance: 14. Maintenance parts)*
	Battery Unit (Lithium battery)		1	R13ZA00600300
Tools	Hexagonal wrench	width across flats: 3 mm	1	For M4 screw
		width across flats: 4 mm	1	For M5 screw
		width across flats: 5 mm	1	For M6 screw
	Spanner	width across flats: 5 mm	1	For D-sub connector removal
	Nut screwdriver	width across flats: 5 mm	1	For D-sub connector removal
	Nippers		1	For cutting wire tie
	Alcohol		Proper quantity	For wiping grease
	Wiping cloth		1	For wiping grease
Material	Wire tie		9	
Grease	Grease for cable (GPL-224)			

Table Top mounting

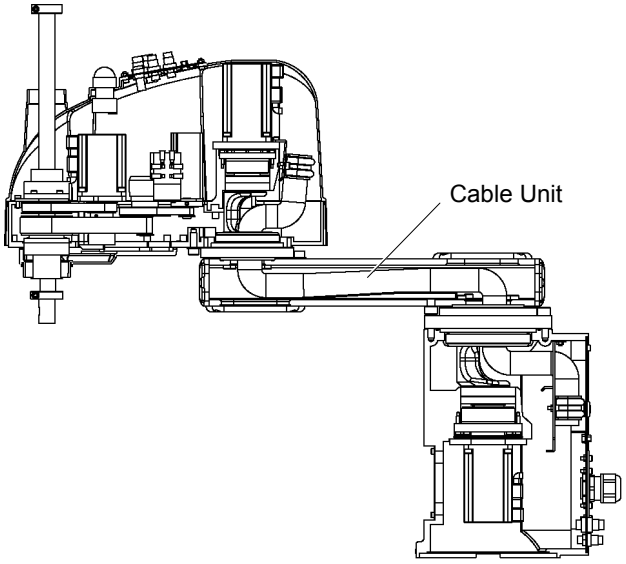

Wall mounting

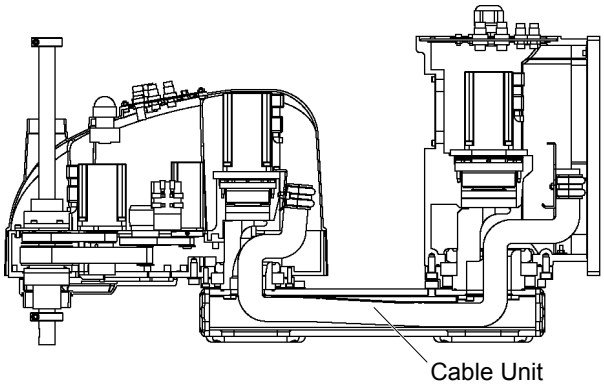

Ceiling mounting

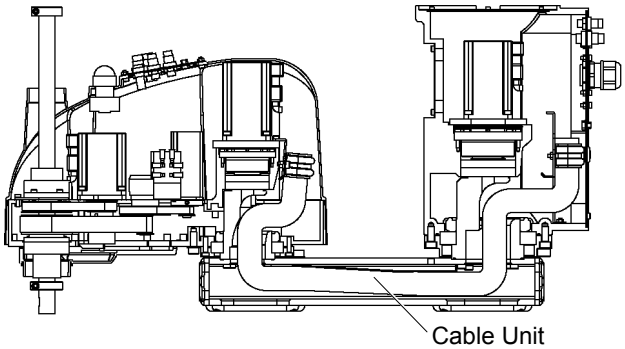

CAUTION	■ If the connectors have been disconnected during the replacement of the cable unit, be sure to reconnect the connectors to their proper positions. Refer to the block diagrams. Improper connection of the connectors may result in improper function of the robot system. For details on the connections, refer to *Maintenance: 4.2 Wiring Diagrams.* ■ When installing the cover, be careful not to allow the cables to interfere with the cover mounting and do not bend these cables forcibly to push them into the cover. Unnecessary strain on cables may result in damage to the cables, disconnection, and/or contact failure. Damaged cables, disconnection, or contact failure is extremely hazardous and may result in electric shock and/or improper function of the robot system. When routing the cables, observe the cable locations after removing the cover. Be sure to place the cables back to their original locations. ■ Be sure to connect the cables properly. Do not allow unnecessary strain on the cables. (Do not put heavy objects on the cables. Do not bend or pull the cables forcibly.) The unnecessary strain on the cables may result in damage to the cables, disconnection, and/or contact failure. Damaged cables, disconnection, or contact failure is extremely hazardous and may result in electric shock and/or improper function of the robot system.

Cable unit Removal

(1) Turn ON the Controller and change the motor to OFF status (MOTOR OFF).

(2) Press and hold the brake release switch to let the shaft down. Be sure to keep enough space and prevent the end effector hitting any peripheral equipment.

The brake release switch affects both Joints #3 and #4. When the brake release switch is pressed, the brakes for both Joints #3 and #4 are released simultaneously. (Joint #4 brake is installed to G6-**3** only.)

Be careful of the shaft falling or rotation while the brake release switch is being pushed because it may be lowered by the weight of an end effector.

(3) Turn OFF the Controller and disconnect the power cable and signal cable connectors from thee controller.

(4) Remove the connector plate.
For details, refer to *Maintenance: 3.4 Connector Plate*.

(5) Connect the spare battery to connector XB11.
- The position data of Joint #1 motor is stored with the battery on Arm #2. Connect the spare battery otherwise the Joint #1 position data will be lost.

(6) Disconnect the connectors, air tubes, ground wire, D-sub cable, and seven connectors (X10, X20, X30, X111, X121, X131, XB10) connected to the connector plate (inner side).

NOTE
- Remember the cable layout so that the cables can be reconnected correctly after replacement.

(7) The procedure of step (7) differs by mounting types.

Follow the corresponding procedure.

When using Table Top mounting type or Ceiling mounting type

(7)-1 Remove the saddle part mounting cables inside the base.

(7)-2 Remove the spring plate.

(7)-3 Cut off the two wire ties binding cables.

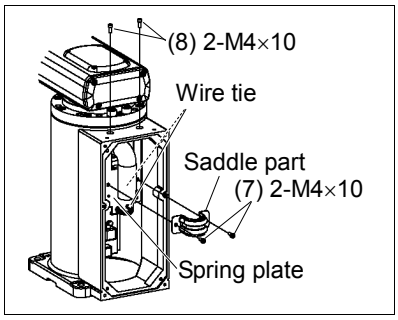

When using Wall mounting type

(7)-1 Remove the ground plate.

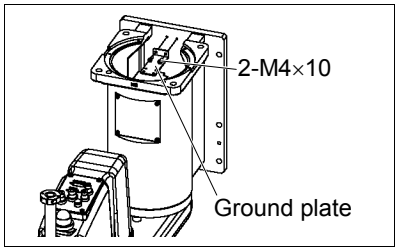

(7)-2 Remove the spring plate.

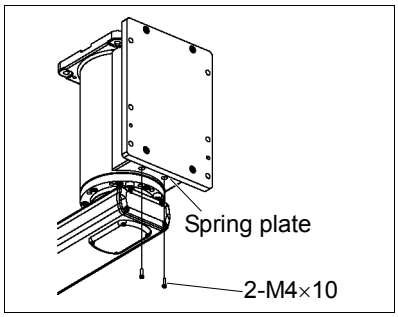

(7)-3 Cut the wire tie banding the cables.

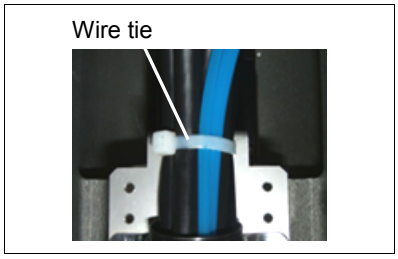

(7)-4 Pull out the spring plate.

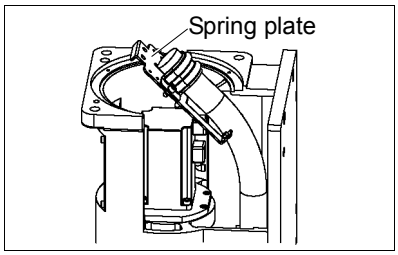

(7)-5 Remove the saddle part mounting the cables.

(7)-6 Cut the wire tie banding the spring.

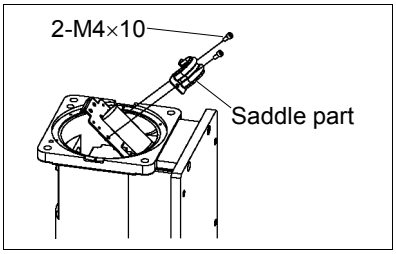

(8) Remove the arm caps and side covers on Arm #1.
For details, refer to *Maintenance: 3.3 Arm #1 Cover*.

(9) Remove the arm top cover.
For details, refer to *Maintenance: 3.1 Arm Top Cover*.

(10) Remove the user plate.
For details of user plate removal, refer to *Maintenance 3.6 User Plate*.

(11) Disconnect the D-sub cable, air tubes, and connector of the brake release switch from the user plate.

Mounting screws for the D-sub cable are very small. Be sure to keep the screws.

Press the ring on the fitting and pull out the air tube. (ø6×2, ø4×2)

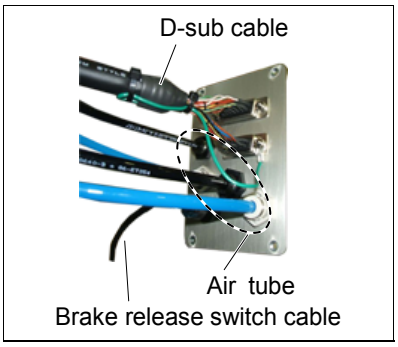

NOTE ☞ Be sure to observe the connection for connecting the disconnected parts after replacement.

(12) Cut off the wire tie binding cables on the Arm #2 side.

(13) Remove the 11 connectors on the Arm side.

X21, X22, X31, X32, X33, X41, X42, X61, X221, X231, X241

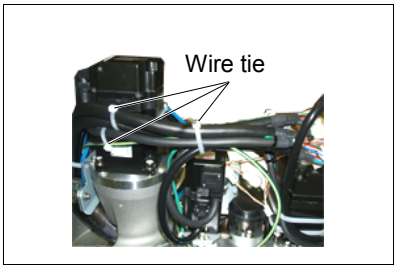

NOTE ☞ Be sure to keep the connectors excluding X61 of the battery board connected at cables replacement. Otherwise, the motor will lose position data and the calibration must be executed again.

(14) Remove the ground terminals mounted to Arm #2.

NOTE ☞ Record the connection terminal and the connection point before disconnect the ground terminal.

G6-***S*, C*: 2 terminals
G6-***D*, P*: 3 terminals

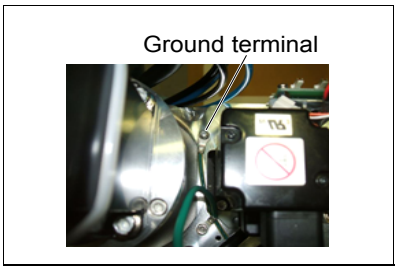

(15) Remove the saddle part mounting cables inside Arm #2.

(16) Remove the spring plate.

(17) Cut off the wire ties binding cable and fixing spring.

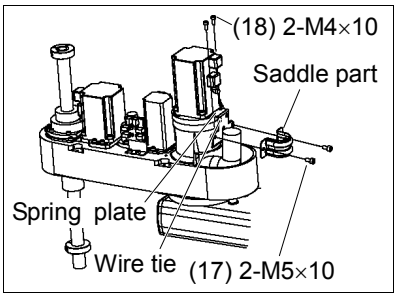

(18) Pull out the Base side cables from Arm #1.

Table Top mounting
: Pull out from the upper part of Arm #1

Wall mounting, Ceiling mounting
: Pull out from the lower part of Arm #1

NOTE
When pulling out the cables, first, pull out the air tubes. Then, pull out from the smaller connectors in order.
Do not try to pull out the cables forcibly. Otherwise, connectors may be stuck, disconnected, or connector pins may fall off.

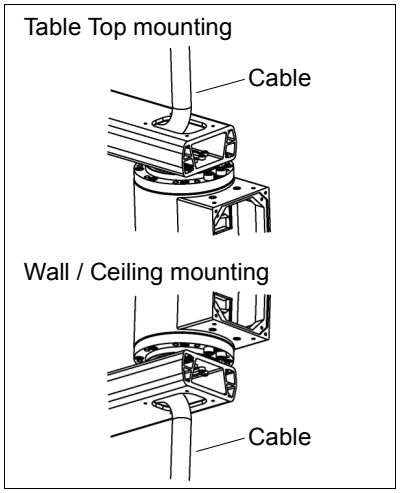

(19) Pull out the cables that were pulled out from Arm #1 in step (18) to the side of Arm #1.

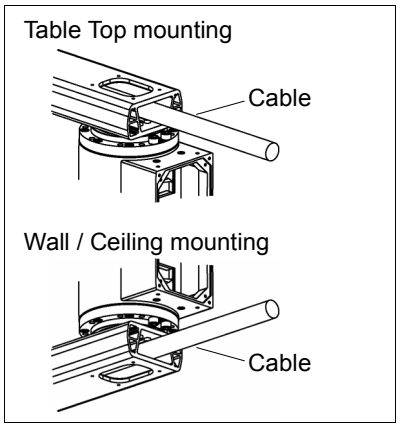

(20) Pull out the Arm #2 side cables from the lower part of Arm #1.

NOTE
When pulling out the cables, first, pull out the air tubes. Then, pull out from the smaller connectors in order.

Do not try to pull out the cables forcibly. Otherwise, connectors may be stuck, disconnected, or connector pins may fall off.

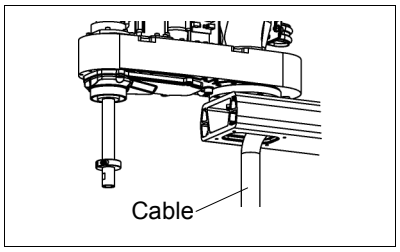

(21) Pull out the cables that were pulled out to the lower part of Arm #1 in step (20) to the side of Arm #1.

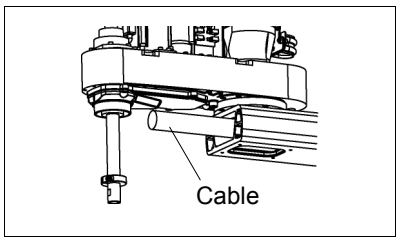

(22) Remove the Arm #1 four mounting bolts on the spring plate side.

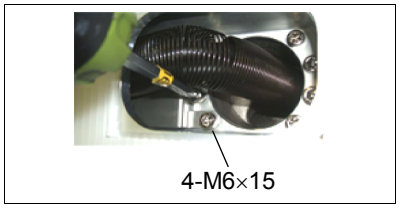

(23) Pull out the cables to the base side.

Cable unit Installation

(1) Apply grease (GPL-224) to the cables.

Grease volume: 5 g each (10 g in total)

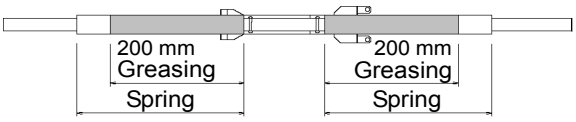

Applying positions
- Each cable inside the spring
- Air tube
- Periphery of spring (shaded part)

(2) Cover both ends of the cables with plastic bags. (The photo shows one end covered with plastic bags)

The plastic bags prevent grease adhesion to the ends of connectors and air tubes during the cable drawing.

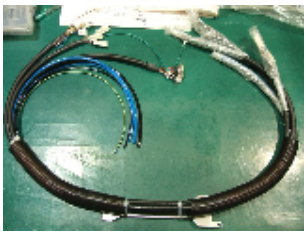

(3) Insert the cables to Arm #1 in the proper direction.

Arm side 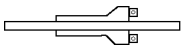 Base side

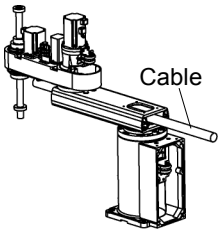

(4) Set the mounting holes of the spring plate to the base side and mount the spring plate to Arm #1.

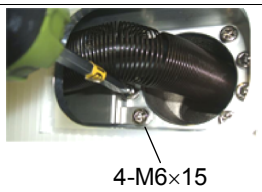

(5) When using Table Top mounting, pull out the base side cables to the upper part of Arm #1 and pull the cables into the base.

When using Wall mounting or Ceiling mounting, pull out the base side cables to the lower part of Arm #1 and pull the cables into the base.

Table Top mounting

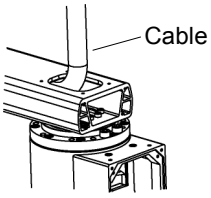

Wall / Ceiling mounting

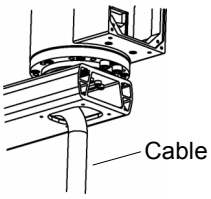

(6) The procedure of step (6) differs by mounting types.

Follow the corresponding procedure.

When using Table Top mounting type or Ceiling mounting type

(6)-1 Mount the spring for cable protection to the spring plate with a wire tie.

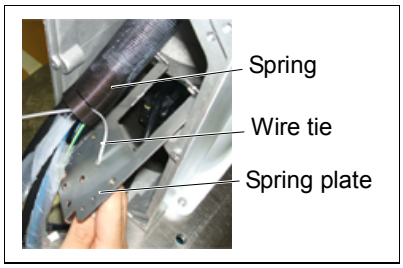

(6)-2 Mount the spring plate to the base.

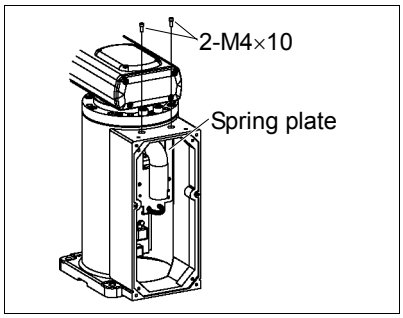

(6)-3 Move Arm #1 to the right or left until the arm touches the mechanical stop to make allowance.
Then, band the cables and air tubes with a wire tie.

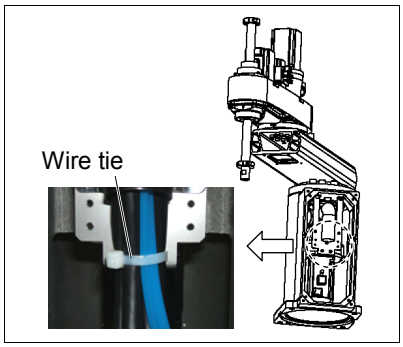

NOTE

If you band the cables and tubes without allowance, the cables are pulled and may be disconnected during the robot operation. Make sure to make allowance.

(6)-4 Remove the plastic bags on the base side applied in step (2).

(6)-5 Mount the saddle part to the spring plate.

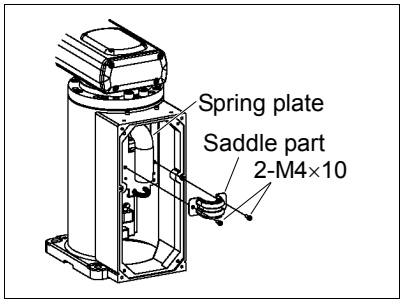

When using Wall mounting type

(6)-1 Pull out the spring and mount it to the spring plate with a wire tie.

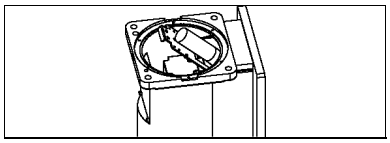

(6)-2 Mount the saddle part to mount the cables.

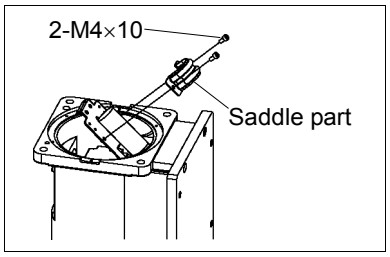

(6)-3 Loosely band the cables with a wire tie. Be sure to keep the wire tie loose enough so that the cables move.

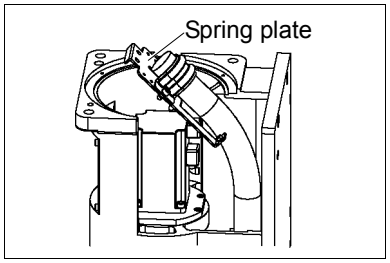

(6)-4 Move Arm #1 to the right or left until the arm touches the mechanical stop to make allowance. Then, band the cables and air tubes with a wire tie.

NOTE
If you band the cables and tubes without allowance, the cables are pulled and may be disconnected during the robot operation. Make sure to make allowance.

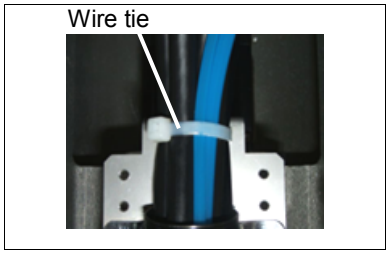

(6)-5 Remove the plastic bags on the base side applied in step (2).

(6)-6 Mount the spring plate.

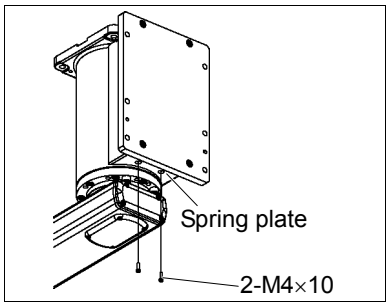

(6)-7 Mount the ground plate.

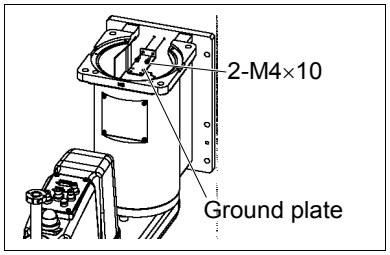

(7) Connect the connectors, air tubes, D-sub cable, and connectors to the connector plate (inner side).

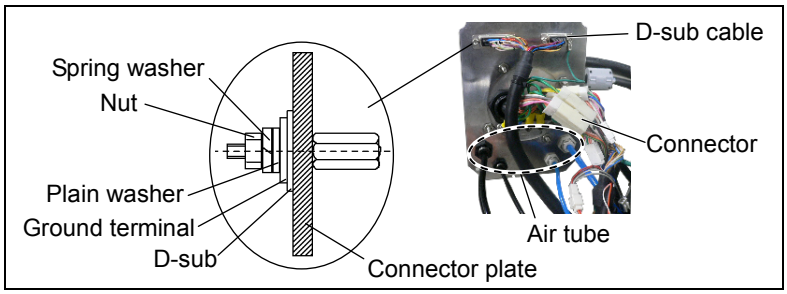

(8) Loosely mount the connector plate with two screws (M4).
For details, refer to *Maintenance: 3.4 Connector Plate*.

(9) Pull out the Arm #2 side cables to the lower part of Arm #1 and pull the cables into Arm #2.

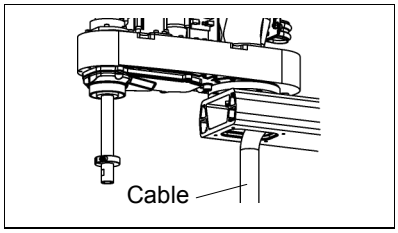

(10) Mount the spring for cable protection to the spring plate with a wire tie.

Secure the spring plate to Arm 2.

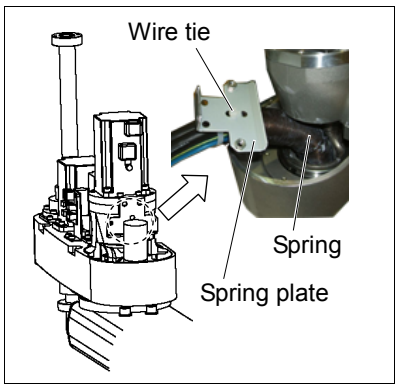

(11) Move Arm #2 until the arm touches the mechanical stop to make allowance.

Then, band the cables and air tubes with a wire tie.

NOTE

If you band the cables and tubes without allowance, the cables are pulled and may be disconnected during the robot operation. Make sure to make allowance.

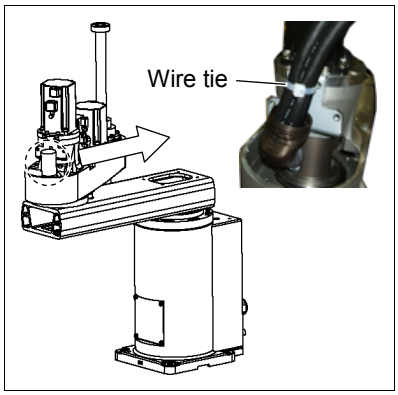

(12) Remove the plastic bags on the Arm side applied in step (2).

(13) Mount the saddle part to the spring plate.

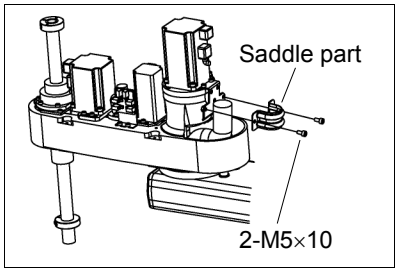

(14) Connect the connectors and the ground wire.
For details, refer to *Maintenance: 4.2 Wiring Diagrams*.

(15) Bind the excess cables with a wire tie.

(16) Connect the D-sub cable, air tubes, and connector of the brake release switch cable to the user plate.

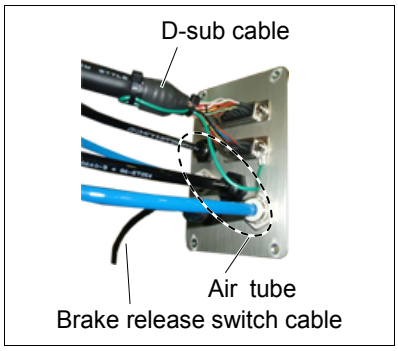

(17) Mount the user plate to the Arm #2 cover.
For details of user plate installation, refer to *Maintenance 3.6 User Plate*.

(18) Set and secure the Arm #2 cover without the cables being stuck.
For details, refer to *Maintenance: 3.1 Arm Top Cover*.

(19) Mount the arm caps and side covers for Arm #1.
For details, refer to *Maintenance: 3.3 Arm #1 Cover*.

(20) Remove the conector plate mounted loosely in the step (8) and remove the spare battery in theXB11. Then, mount the connector plate.

NOTE
In this replacement method, calibration is not needed.
However, perform the calibration if it is required.

4.2 Wiring Diagrams

4.2.1 Signal Cable

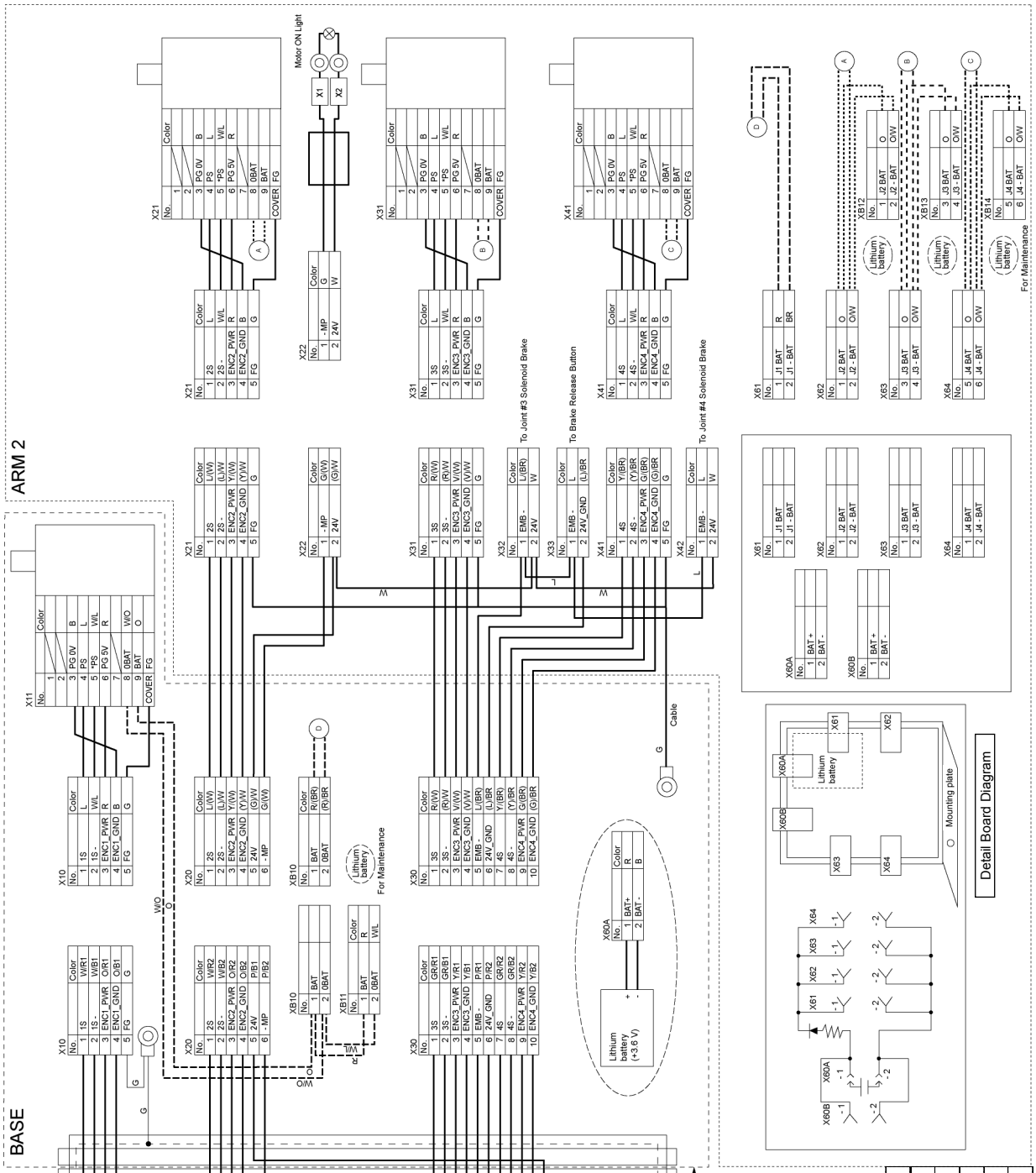

Code	Cable color	Code	Cable color
B	Black	P	Pink
BR	Brown	R	Red
G	Green	V	Violet
L	Blue	W	White
O	Orange	Y	Yellow

4.2.2 Power Cable

RC180, RC620, RC620DU

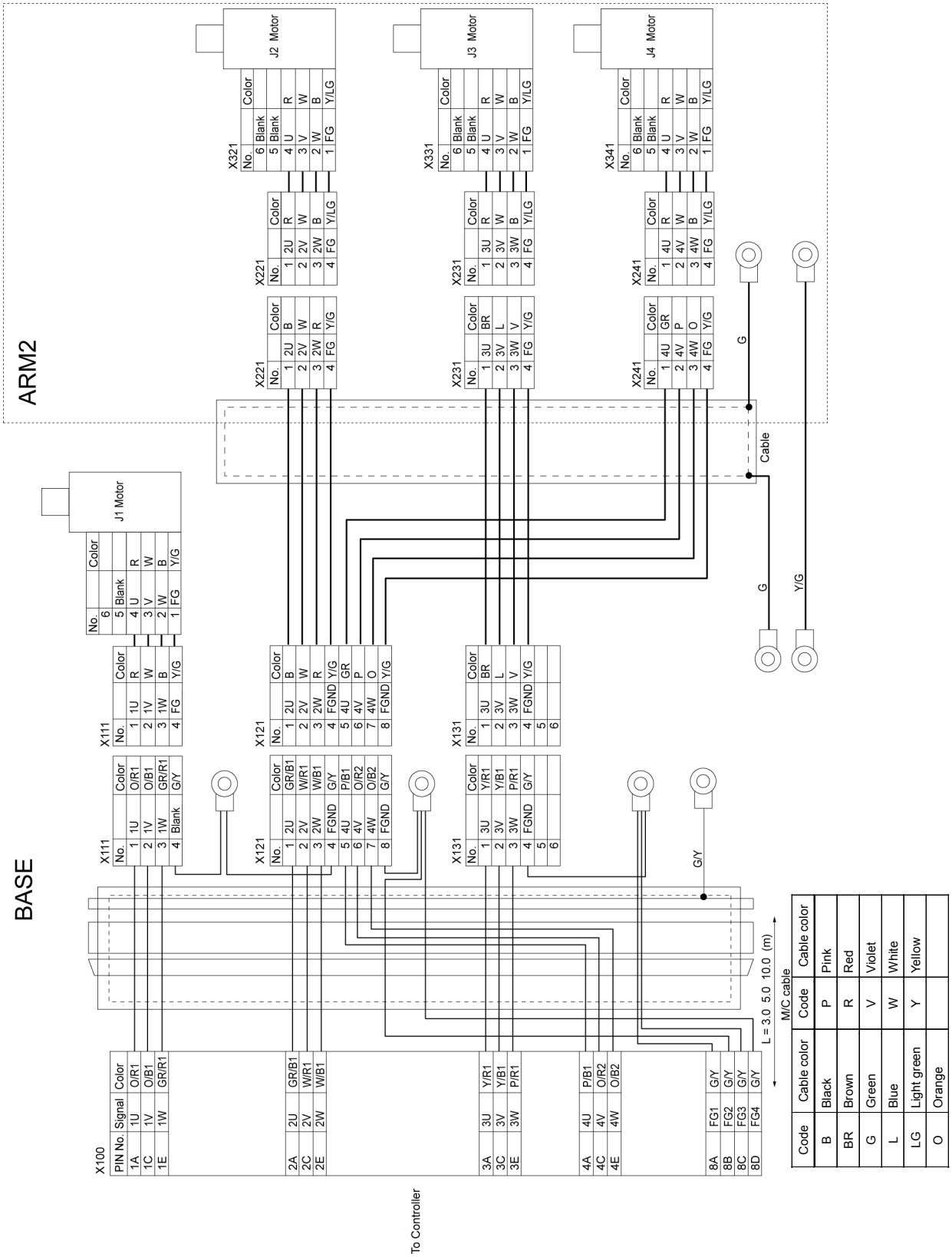

RC700-A, RC700DU-A

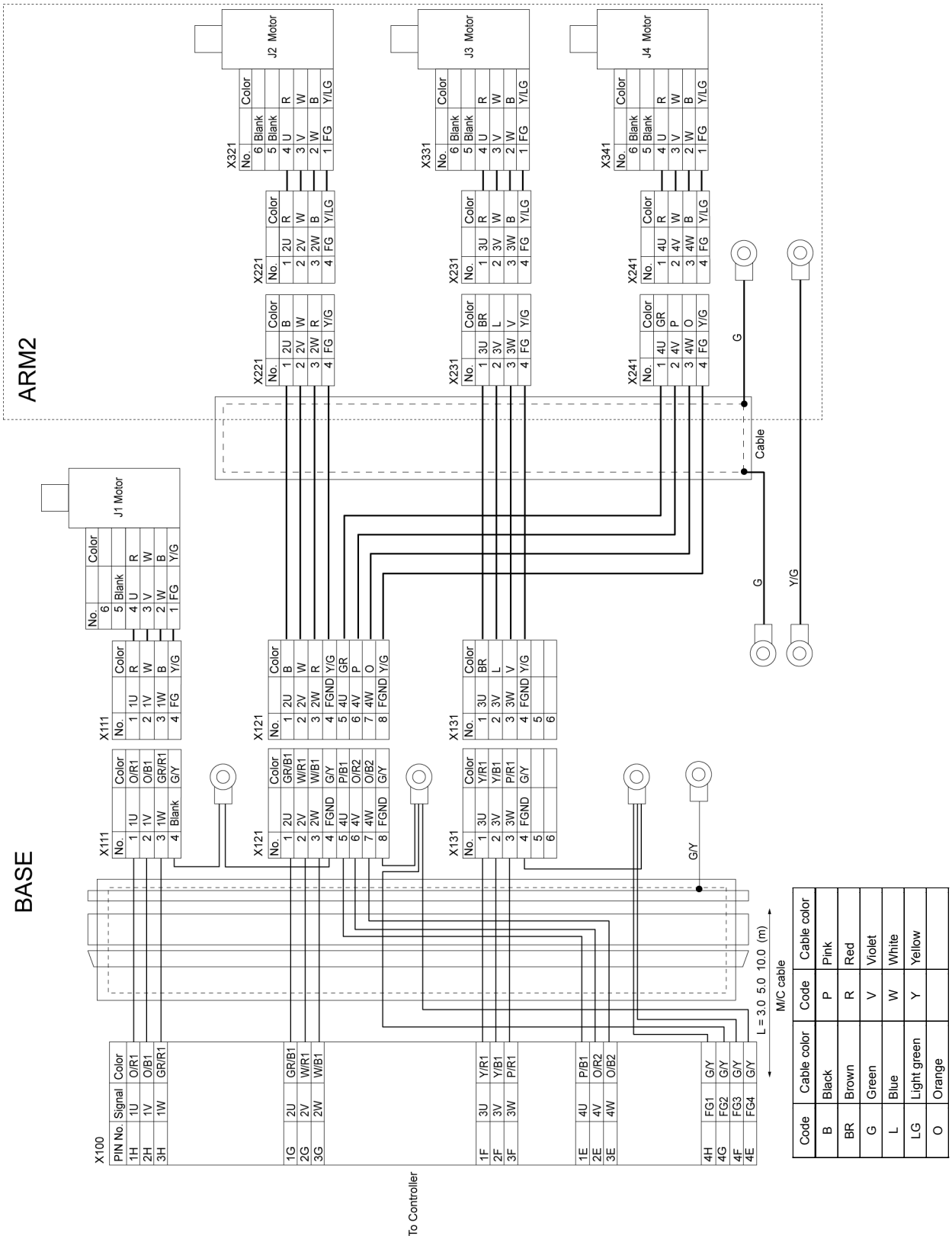

Code	Cable color	Code	Cable color
B	Black	P	Pink
BR	Brown	R	Red
G	Green	V	Violet
L	Blue	W	White
LG	Light green	Y	Yellow
O	Orange		

4.2.3 User Cable

D-sub 9pin

No.	Color
1	R/(BR)
2	(R)/BR
3	V/(BR)
4	(V)/BR
5	L/(B)
6	(L)/B
7	Y/(B)
8	(Y)/B
9	(G)/BR

D-sub 9pin

No.	Color
1	R/(BR)
2	(R)/BR
3	V/(BR)
4	(V)/BR
5	L/(B)
6	(L)/B
7	Y/(B)
8	(Y)/B
9	(G)/BR

D-sub 15pin

No.	Color
1	L/(W)
2	(L)/W
3	Y/(W)
4	(Y)/W
5	G/(W)
6	(G)/W
7	R/(W)
8	(R)/W
9	V/(W)
10	(V)/W
11	L/(BR)
12	(L)/BR
13	Y/(BR)
14	(Y)/BR
15	G/(BR)

D-sub 15pin

No.	Color
1	L/(W)
2	(L)/W
3	Y/(W)
4	(Y)/W
5	G/(W)
6	(G)/W
7	R/(W)
8	(R)/W
9	V/(W)
10	(V)/W
11	L/(BR)
12	(L)/BR
13	Y/(BR)
14	(Y)/BR
15	G/(BR)

Y/G

Code	Cable color	Code	Cable color
B	Black	R	Red
BR	Brown	V	Violet
G	Green	W	White
L	Blue	Y	Yellow

The following table shows the types of the use cable.

Environment	Arm length	Code	Note
S, C	450 mm	R13B020012	
	550 mm	R13B020013	
	650 mm	R13B020014	
P, D	450 mm	R13B020015	Waterproof connector
	550 mm	R13B020016	
	650 mm	R13B020017	

4.3 Replacing M/C Cable

Since the power is supplied to each motor from the lithium battery installed on the battery board via the battery connector, the position data will not be lost when the Controller is turned OFF. When the battery connectors are disconnected, the position data will be lost, and EPSON RC+ will display an error when the Controller is turned ON.

NOTE

If the connector connected to the battery was disconnected during cable replacement, execute calibration.
For details, refer to *Maintenance: 13. Calibration.*

	Name	Quantity	Note
Maintenance parts	M/C Cable	1	Each manipulator model (Refer to *Maintenance: 14. Maintenance parts*)
Tools	Hexagonal wrench (width across flats: 3 mm)	1	For M4 screw
	Torque wrench	1	

CAUTION

- If the connectors have been disconnected during the replacement of the cable unit, be sure to reconnect the connectors to their proper positions. Refer to the block diagrams.
  Improper connection of the connectors may result in improper function of the robot system.
  For details on the connections, refer to *Maintenance: 4.2 Wiring Diagrams.*
- When installing the cover, be careful not to allow the cables to interfere with the cover mounting and do not bend these cables forcibly to push them into the cover. Unnecessary strain on cables may result in damage to the cables, disconnection, and/or contact failure. Damaged cables, disconnection, or contact failure is extremely hazardous and may result in electric shock and/or improper function of the robot system.
  When routing the cables, observe the cable locations after removing the cover. Be sure to place the cables back to their original locations.
- Be sure to connect the cables properly. Do not allow unnecessary strain on the cables. (Do not put heavy objects on the cables. Do not bend or pull the cables forcibly.) The unnecessary strain on the cables may result in damage to the cables, disconnection, and/or contact failure. Damaged cables, disconnection, or contact failure is extremely hazardous and may result in electric shock and/or improper function of the robot system.

Table Top mounting

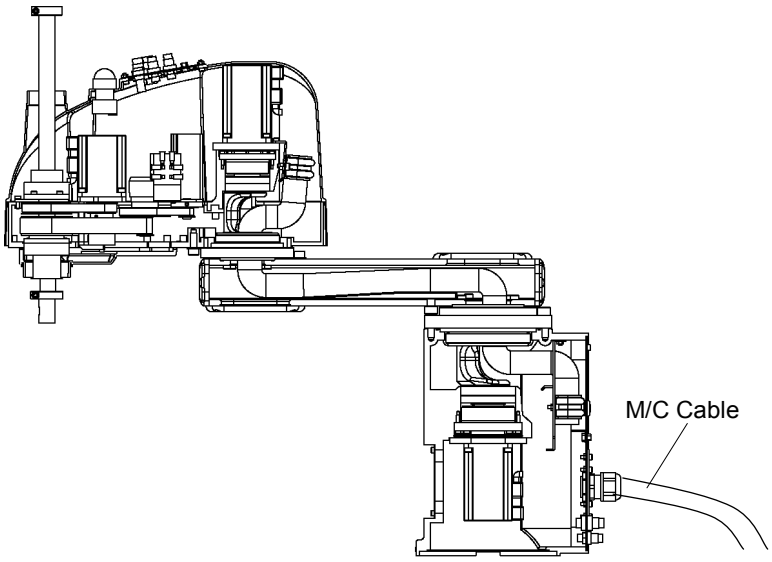

Wall mounting

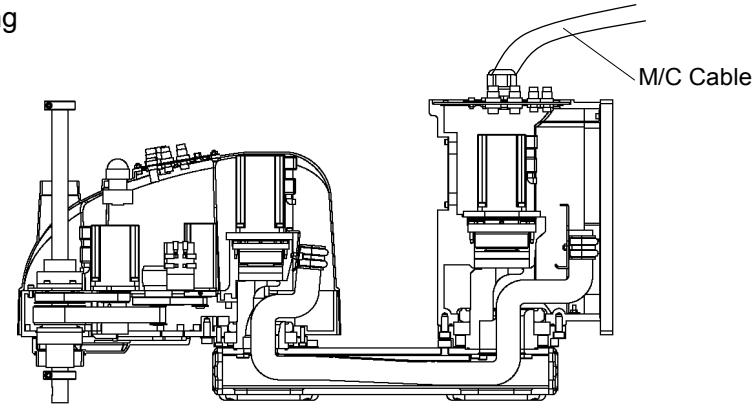

Ceiling mounting

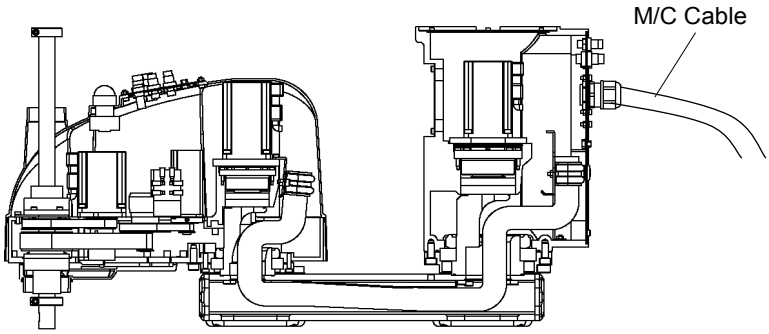

M/C Cable Removal

(1) Turn OFF the Controller.

(2) Disconnect the power cable and signal cable connectors from the controller.

(3) Remove the Connector Sub Plate.
For details, refer to *Maintenance: 3.5 Connector Sub Plate*.

NOTE
Do not pull the Sub plate forcibly.
The M/C cables are still attached to the plate.

(4) Disconnect the connectors.
Connector: x10, x20, x30, x111, x121, X131

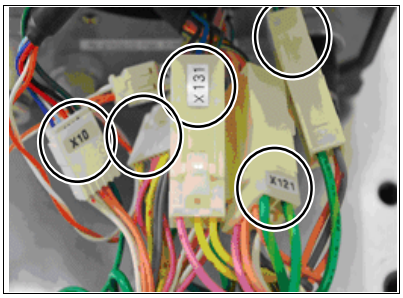

NOTE
Each connector has a unique number.
Each connector has a different shape.

NOTE
Do not disconect the battery connector (XB10).
Otherwise, the calibration must be executed.

M/C Cable Installation

(5) Connect new M/C cable connectors to those of the Cable Unit.

(Connect to the connectors of the Cable Unit with the same number.)

(6) Mount the Connector Sub Plate.
For details, refer to *Maintenance: 3.5 Connector SubPlate*.

(7) Connect the power cable and signal cable connectors to the controller.

(8) Turn ON the Controller.

(9) If the connector (XB10) falls off from the battery, execute the calibration for Joint #1.
For details, refer to *Maintenance: 13 Calibration*.

5. Arm #1

WARNING	■ Do not insert or pull out the motor connectors while the power to the robot system is turned ON. Inserting or pulling out the motor connectors with the power ON is extremely hazardous and may result in serious bodily injury as the Manipulator may move abnormally, and also may result in electric shock and/or malfunction of the robot system. ■ To shut off power to the robot system, pull out the power plug from the power source. Be sure to connect the AC power cable to a power receptacle. DO NOT connect it directly to a factory power source. ■ Before performing any replacement procedure, turn OFF the Controller and related equipment, and then pull out the power plug from the power source. Performing any replacement procedure with the power ON is extremely hazardous and may result in electric shock and/or malfunction of the robot system.

CAUTION	■ Be careful not to apply excessive shock to the motor shaft when replacing the motors. The shock may shorten the life cycle of the motors and encoder and/or damage them. ■ Never disassemble the motor and encoder. A disassembled motor and encoder will cause a positional gap and cannot be used again.

After parts have been replaced (motors, reduction gear units, brakes, timing belts, ball screw spline unit, etc.), the Manipulator cannot operate properly because a mismatch exists between the origin stored in each motor and its corresponding origin stored in the Controller.
After replacing the parts, it is necessary to match these origins.
The process of aligning the two origins is called “Calibration”.

Refer to *Maintenance: 13. Calibration* to perform the calibration.

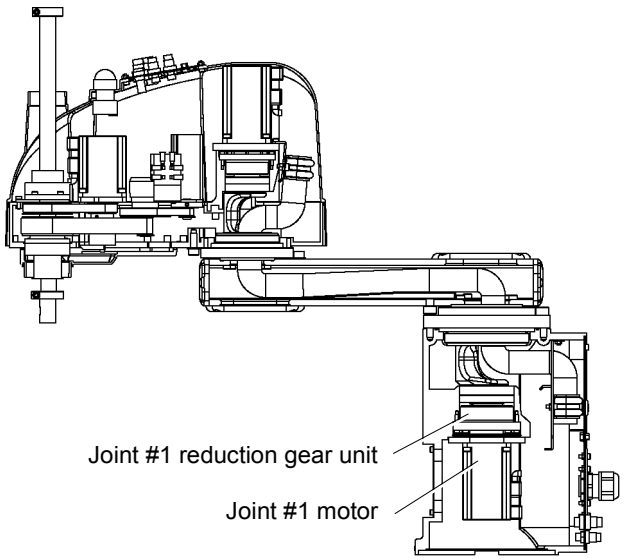

5.1 Replacing Joint #1 Motor

	Name		Quantity	Note
Maintenance parts	AC Servo Motor (400 W)		1	R13B000607
				R13B000616 (For S/N:1**** or later)
Tools	Hexagonal wrench	width across flats: 2.5 mm	1	For M5 set screw, M3 screw
		width across flats: 3 mm	1	For M4 screw
		width across flats: 4 mm	1	For M5 screw
	Wiping cloth		1	For wiping grease
Grease	Grease (SK-1A)		13 g	

Joint #1 motor Removal

(1) Remove the connector plate.
For details, refer to *Maintenance: 3.4 Connector Plate*.

(2) Disconnect the following connectors.
Connectors X111, X10 (Hold the claw to remove.)
Connector XB10

(3) Remove the maintenance plate.
For details, *refer* to *Maintenance: 3.7 Maintenance Plate*.

(4) Remove the spring plate.
For the details, refer to *Maintenance: 4.1 Replacing Cable Unit - Cable unit Removal Step (7)-2* for Table mounting, Ceiling mounting.

(5) Remove the Joint #1 motor unit from the base.

To do so, unscrew the bolts from the Joint #1 motor flange. Then, pull out the motor straight and downward. To unscrew the two bolts on the maintenance hole side, insert a hexagonal wrench through the maintenance hole.

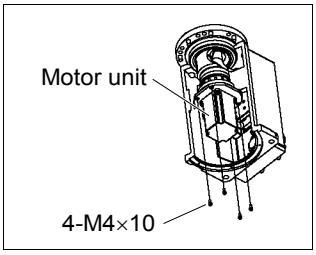

If the motor cannot be pulled out easily, pull it out while moving Arm #1 slowly by hand.

(6) Remove the wave generator from the Joint #1 motor.

There is a brass bushing in one of the set screw holes. Be careful not to lose it.

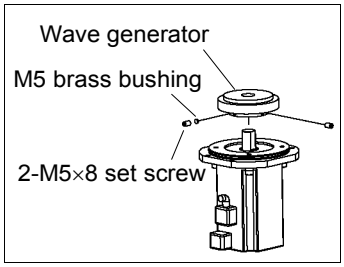

Remove the motor flange from the Joint #1 motor.

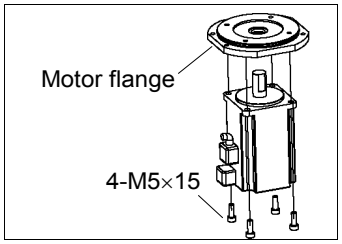

Joint #1 motor Installation

(1) Mount the motor flange on the Joint #1 motor.

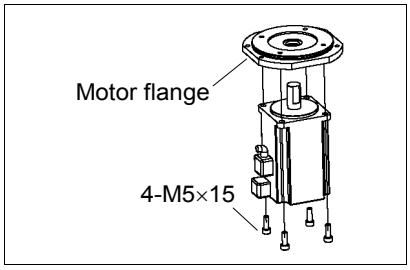

(2) Mount the waveform generator on the Joint #1 motor.

Apply grease without touching the motor axis.

Be sure to fit the end face of the waveform generator to the end face of the motor shaft. Tighten one of the set screws on the flat face of the motor shaft until the screw just touches the surface. Insert a bushing into the other set screw hole to prevent damage to the motor shaft. Then, tighten both set screws.

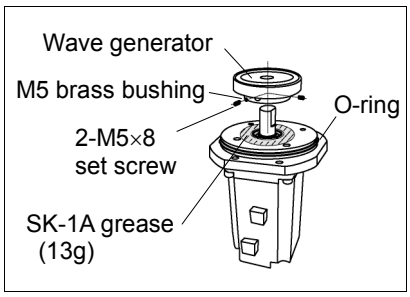

CAUTION	■ See the figures above for the orientation of the waveform generator. Be sure to install the waveform generator properly. Improper installation of the waveform generator will result in improper function of the Manipulator.

(3) Insert the oil seal and mount the Joint #1 motor unit on the base.

Be sure to fit the O-ring properly.

The motor cable must face the connector plate side.

If it is difficult to mount the motor, push it while moving Arm #1 slowly by hand.

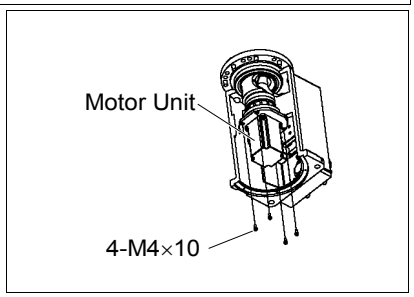

(4) Connect the connectors.

Connectors X111, X10, XB10

(5) Mount the spring plate.

For the details, refer to *Maintenance: 4.1 Replacing Cable Unit - Cable unit Installation Step (6)-2* for Table mounting, Ceiling mounting.

(6) Mount the connector plate.

For details, refer to *Maintenance: 3.4 Connector Plate*.

(7) Mount the maintenance plate.

For details, refer to *Maintenance: 3.7 Maintenance Plate*.

(8) Perform the calibration of Joint #1.

For details refer to *Maintenance: 13. Calibration.*

5.2 Replacing Joint #1 Reduction Gear Unit

A reduction gear unit consists of the following three parts and two attached parts. At replacing the reduction gear unit, be sure to always replace them all together as one set.

Reduction gear unit : Waveform generator, Flexspline, Circular spline

Attachment : Spacer, Grip ring

For details of the reduction gear unit, refer to *Maintenance: 14. Maintenance parts list*.

	Name		Quantity	Note
Maintenance Parts	Reduction Gear Unit		1	R13B010011
Tools	Hexagonal wrench	width across flats: 2.5 mm	1	
		width across flats: 3 mm	1	For M4 screw
		width across flats: 4 mm	1	
		width across flats: 5 mm	1	For M6 screw
	Torque wrench	M4	1	Tightening torque 6.0 N·m (61.2 kgf·cm)
		M6	1	Tightening torque 22.0 N·m (224.3 kgf·cm)
	Nippers		1	
	Spatula		1	For apply grease
	Wiping cloth		1	For wiping grease (Flange)
			1	For wiping grease (Bolt)
	Screw (M4)		2	About 20mm in length For flexspline removal
Grease	Grease (SK-1A)		40 g	

Joint #1 reduction gear unit Removal

(1) Execute the removal steps from (1) to (5) in *Maintenance: 5.1 Replacing Joint #1 Motor* and remove the waveform generator.

(2) Remove the arm cap on the base side.
For details, refer to *Maintenance: 3.3 Arm #1 Cover*.

(3) Turn the Manipulator laterally.

CAUTION	■ When turning the Manipulator laterally, there must be two or more people to work on it so that at least one of them can support the arm while others are removing the bolts. Removing the bolts without supporting the arm may result in the arm falling, bodily injury, and/or malfunction of the robot system.

(4) Use the extracting M4 screws and remove the flexspline and the grip ring.

Be sure to keep the spacer.

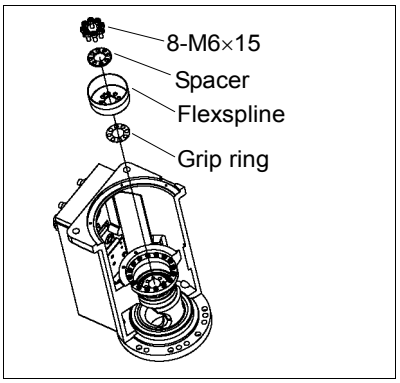

(5) Remove the circular spline from the base.

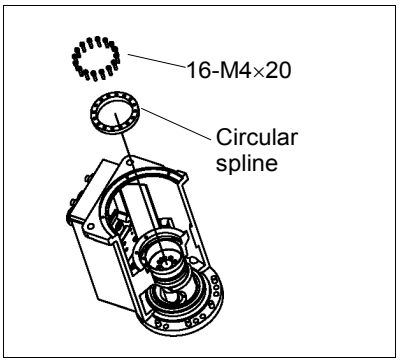

Joint #1 reduction gear unit Installation

(1) A new reduction gear unit contains the parts shown in the picture on the right when it is unpacked.

Apply grease (SK-1A) to the waveform generator and flexspline so that the gear surface is filled with grease.

(2) Set the hole on the circular spline and the tap hole on the base.

Loosely secure all bolts in a crisscross pattern so that the bolts will be secured evenly. Then, using a torque wrench, tighten each bolt securely in a crisscross pattern at the torque specified in the table below.

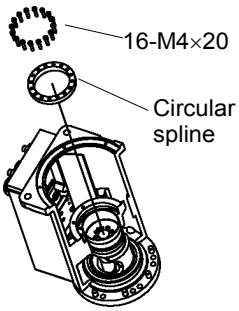

Item	Bolt type	Number of bolts	Tightening torque
Joint #1 reduction gear unit	M4×20	16	6.0 N·m (61.2 kgf·cm)
	M6×15	8	22.0 N·m (224.3 kgf·cm)

(3) Set the grip ring by aligning it with the tap hole.

Set the flexspline by aligning it with the tap hole.

Align the position of the air vent of the spacer.

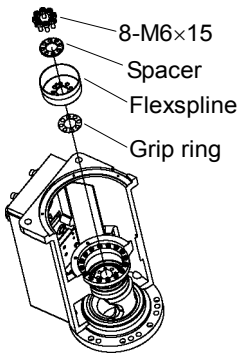

(4) Apply grease (SK-1A) inside the flexspline.

Grease volume 27 g

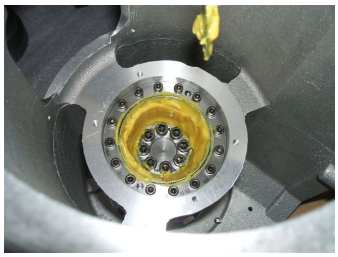

(5) Apply grease (SK-1A) to the bearing part of the waveform generator.

(6) Execute steps from (2) to (3) in *Maintenance: 5.1 Replacing Joint #1 Motor*.

(7) Turn and secure the Manipulator to the mounting position.

(8) Execute steps from (4) to (7) in *Maintenance: 5.1 Replacing Joint #1 Motor*.

6. Arm #2

WARNING	■ Do not insert or pull out the motor connectors while the power to the robot system is turned ON. Inserting or pulling out the motor connectors with the power ON is extremely hazardous and may result in serious bodily injury as the Manipulator may move abnormally, and also may result in electric shock and/or malfunction of the robot system. ■ To shut off power to the robot system, pull out the power plug from the power source. Be sure to connect the AC power cable to a power receptacle. DO NOT connect it directly to a factory power source. ■ Before performing any replacement procedure, turn OFF the Controller and related equipment, and then pull out the power plug from the power source. Performing any replacement procedure with the power ON is extremely hazardous and may result in electric shock and/or malfunction of the robot system.

CAUTION	■ Be careful not to apply excessive shock to the motor shaft when replacing the motors. The shock may shorten the life cycle of the motors and encoder and/or damage them. ■ Never disassemble the motor and encoder. A disassembled motor and encoder will cause a positional gap and cannot be used again.

After parts have been replaced (motors, reduction gear units, brakes, timing belts, ball screw spline unit, etc.), the Manipulator cannot operate properly because a mismatch exists between the origin stored in each motor and its corresponding origin stored in the Controller.

After replacing the parts, it is necessary to match these origins.

The process of aligning the two origins is called “Calibration”.

Refer to *Maintenance: 13. Calibration* to perform the calibration.

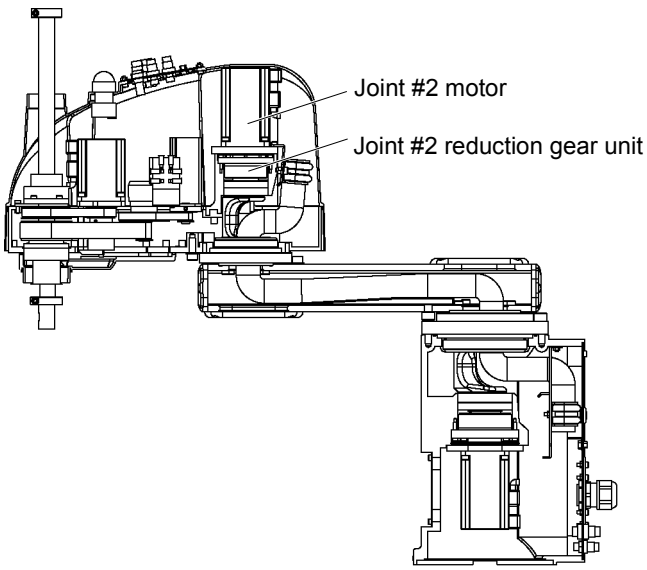

6.1 Replacing Joint #2 Motor

	Name		Quantity	Note
Maintenance Parts	AC Servo Motor (400W)		1	R13B000607
				R13B000616 (For S/N : 1**** or later)
Tools	Hexagonal wrench	width across flats: 2 mm	1	For M4 set screw
		width across flats: 3 mm	1	For M4 screw
		width across flats: 4 mm	1	For M5 screw
	Nippers		1	For cutting wire tie
	Wiping cloth		1	For wiping grease
Material	Wire tie		4	
Grease	Grease (SK-1A)		6 g	

Joint #2 motor Removal

(1) Turn ON the Controller.

(2) Push down the shaft to its lower limit while pressing the brake release switch. Be sure to keep enough space and prevent the end effector hitting any peripheral equipment.

The brake release switch is applied to both Joints #3 and #4. When the brake release switch is pressed, the respective brakes of the Joints #3 and #4 are released simultaneously. (Joint #4 brake is installed to G6-**3** only.)

Be careful of the shaft falling and rotating while the brake release switch is being pressed because the shaft may be lowered by the weight of an end effector.

(3) Turn OFF the Controller.

(4) Remove the arm top cover.
For details, refer to *Maintenance: 3.1 Arm Top Cover*.

(5) Disconnect the connectors X22, X33 connected to the arm top cover.

(6) Cut off the wire tie used for binding the motor cables to the Joint #2 motor.

(7) Disconnect the connectors.
Connectors X221, X21 (Hold the claw to remove.)
Connector X62

(8) Remove the spring plate.

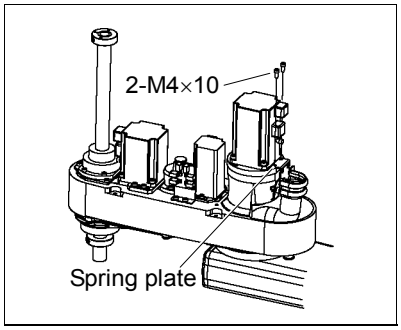

(9) Remove the Joint #2 motor unit from Arm #2.

To do so, unscrew the bolts from the Joint #2 motor flange. Pull the Joint #2 motor unit upward to remove.

If the motor cannot be removed easily, pull it out while moving Arm #2 slowly by hand.

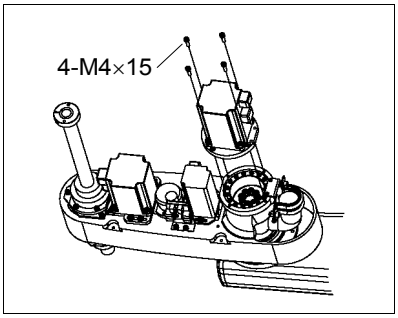

(10) Remove the wave generator from the Joint #2 motor.

There is a brass bushing in one of the set screw holes. Be careful not to lose it.

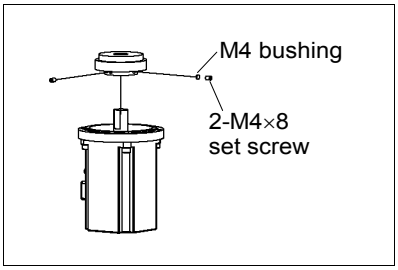

(11) Remove the motor flange from the Joint #2 motor.

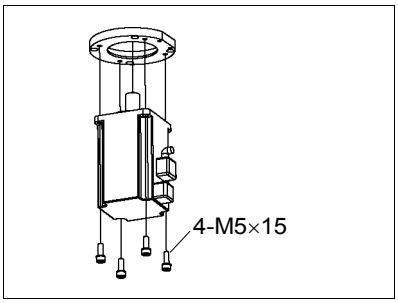

Joint #2 motor Installation

(1) Mount the motor flange on the Joint #2 motor.

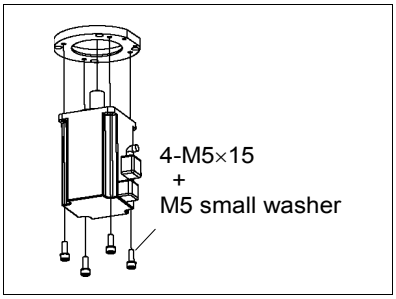

(2) Mount the waveform generator on the Joint #2 motor.

Apply grease without touching the motor axis.

Be sure to fit the end face of the waveform generator to the end face of the motor shaft. Tighten one of the set screws on the flat face of the motor shaft until the screw just touches the surface. Insert a bushing into the other set screw hole to prevent damage to the motor shaft. Then, tighten both set screws.

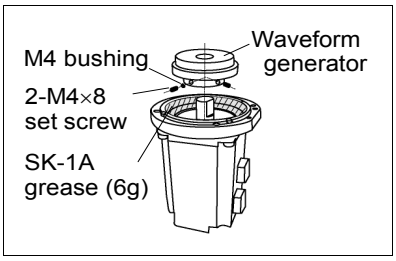

CAUTION	■ See the figures above for the orientation of the waveform generator. Be sure to install the waveform generator properly. Improper installation of the waveform generator will result in improper function of the Manipulator.

(3) Mount the Joint #2 motor unit on Arm #2.

If it is difficult to mount the motor, push it while moving Arm #2 slowly by hand.

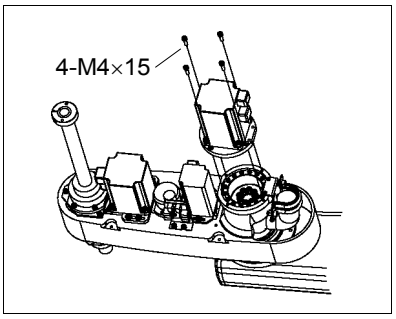

(4) Mount the spring plate.

(5) Connect the connectors X221, X21, and X62.

(6) Re-bundle the cables in their original positions with a wire tie removed in the removal procedure step (6).

Do not allow unnecessary strain on the cables.

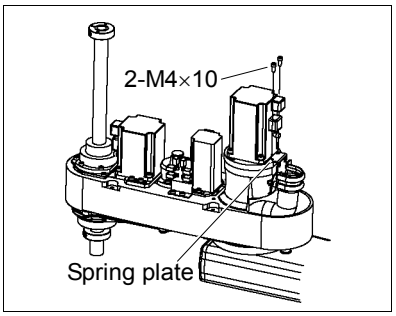

(7) Make sure that the connectors X22 and X33 are connected.

(8) Mount the arm top cover.
For details, refer to *Maintenance: 3.1 Arm Top Cover*.

(9) Perform the calibration of Joint #2.
For details refer to *Maintenance: 13. Calibration.*

6.2 Replacing Joint #2 Reduction Gear Unit

A reduction gear unit consists of the following three parts and two attached parts. At replacing the reduction gear unit, be sure to always replace them all together as one set.

Reduction gear unit : Waveform generator, Flexspline, Circular spline

Attachment : Spacer, Grip ring

For details of the reduction gear unit, refer to *Maintenance: 14. Maintenance parts list*.

	Name		Quantity	Note
Maintenance parts	Reduction Gear Unit		1	R13B010012
Tools	Hexagonal wrench	width across flats: 2 mm	1	
		width across flats: 2.5 mm	1	For M3 screw
		width across flats: 3 mm	1	
		width across flats: 4 mm	1	For M5 screw
	Torque wrench	M3	1	Tightening torque 3.0 N·m (30.5 kgf·cm)
		M5	1	Tightening torque 12.0 N·m (122.3 kgf·cm)
	Nippers		1	
	Spatula		1	For apply grease
	Wiping cloth		1	For wiping grease (Flange)
			1	For wiping grease (Bolt)
	Screw (M3)		2	For flexspline removal
Material	Wire tie		4	
Grease	Grease (SK-1A)		21 g	

Joint #2 reduction gear unit Removal

(1) Turn ON the Controller.

(2) Push down the shaft to its lower limit while pressing the brake release switch. Be sure to keep enough space and prevent the end effector hitting any peripheral equipment.

The brake release switch is applied to both Joints #3 and #4. When the brake release switch is pressed, the respective brakes of the Joints #3 and #4 are released simultaneously. (Joint #4 brake is installed to G6-**3** only.)

Be careful of the shaft falling and rotating while the brake release switch is being pressed because the shaft may be lowered by the weight of an end effector.

(3) Turn OFF the Controller.

(4) Execute steps from (1) to (10) in *Maintenance: 6.1 Replacing Joint #2 Motor* and remove the waveform generator from the Joint #2 motor.

(5) Use the extracting M3 screws and remove the flexspline and grip ring from Arm #2.

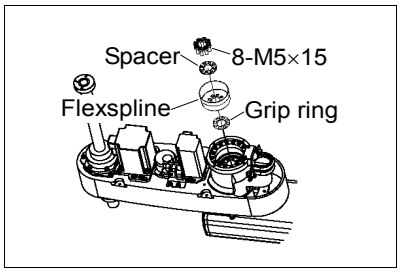

(6) Remove the circular spline from Arm #2.

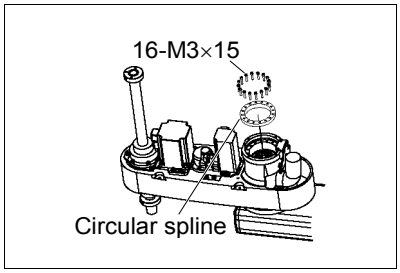

Joint #2 reduction gear unit Installation

(1) A new reduction gear unit contains the parts shown in the picture on the right when it is unpacked.

Apply grease (SK-1A) to the waveform generator and flexspline so that the gear surface is filled with grease.

(2) Set the hole on the circular spline and the tap hole on the base.

Loosely secure all bolts in a crisscross pattern so that the bolts will be secured evenly. Then, using a torque wrench, tighten each bolt securely in a crisscross pattern at the torque specified in the table below.

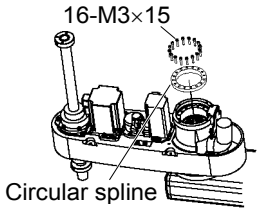

Item	Bolt type	Number of bolts	Tightening torque
Joint #2 reduction gear unit	M3×15	16	3.0 N·m (30.5 kgf·cm)
	M5×15	8	12.0 N·m (122.3 kgf·cm)

(3) Set the grip ring by aligning it with the tap hole.

Set the flexspline by aligning it with the tap hole.

Align the tap hole and mount the flexspline.

Align the position of the air vent of the spacer.

If it is difficult to align the position, move Arm #2 from side to side.

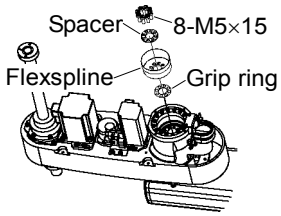

(4) Apply grease (SK-1A) inside the flexspline.

Grease volume 15 g

(5) Apply grease (SK-1A) to the bearing part of the waveform generator.

(6) Execute steps from (2) to (9) in Maintenance: 6.1 Replacing Joint #2 Motor.

7. Arm #3

WARNING	■ Do not insert or pull out the motor connectors while the power to the robot system is turned ON. Inserting or pulling out the motor connectors with the power ON is extremely hazardous and may result in serious bodily injury as the Manipulator may move abnormally, and also may result in electric shock and/or malfunction of the robot system. ■ To shut off power to the robot system, pull out the power plug from the power source. Be sure to connect the AC power cable to a power receptacle. DO NOT connect it directly to a factory power source. ■ Before performing any replacement procedure, turn OFF the Controller and related equipment, and then pull out the power plug from the power source. Performing any replacement procedure with the power ON is extremely hazardous and may result in electric shock and/or malfunction of the robot system.

CAUTION	■ Be careful not to apply excessive shock to the motor shaft when replacing the motors. The shock may shorten the life cycle of the motors and encoder and/or damage them. ■ Never disassemble the motor and encoder. A disassembled motor and encoder will cause a positional gap and cannot be used again.

After parts have been replaced (motors, reduction gear units, brakes, timing belts, ball screw spline unit, etc.), the Manipulator cannot operate properly because a mismatch exists between the origin stored in each motor and its corresponding origin stored in the Controller.
After replacing the parts, it is necessary to match these origins.

The process of aligning the two origins is called “Calibration”.

Refer to *Maintenance: 13. Calibration* to perform the calibration.

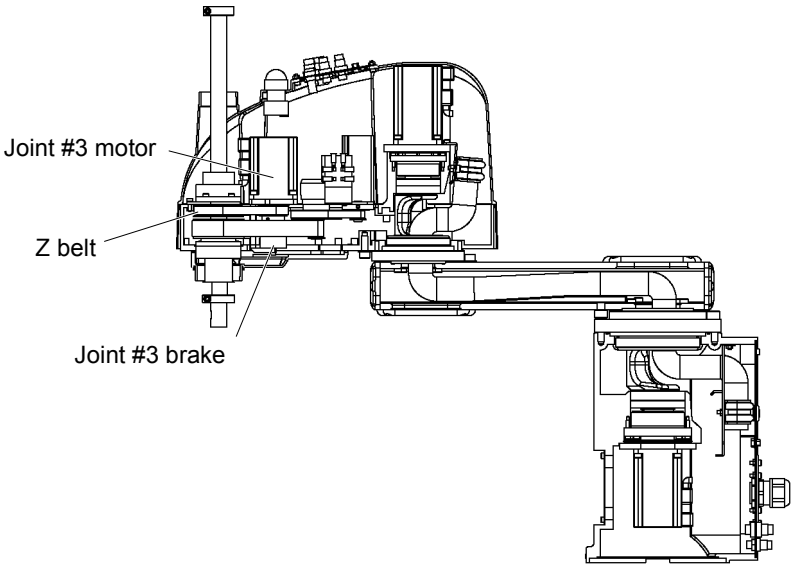

7.1 Replacing Joint #3 Motor

	Name		Quantity	Note
Maintenance parts	AC Servo Motor (200W)		1	R13B000608
				R13B000614 (For S/N : 1**** or later)
Tools	Hexagonal wrench	width across flats: 2.5 mm	1	For M5 set screw
		width across flats: 3 mm	1	For M4 screw
		width across flats: 4 mm	1	For M5 screw
	Torque wrench (M5)		1	Tightening torque 7.0 N·m (71.3 kgf·cm)
	Nippers		1	For cutting wire tie
	Force gauge		1	Belt tension 80 N (8.2 kgf)
	Suitable cord (Length about 800 mm)		1	For belt tension
Material	Wire tie		2	

A brake is mounted on the motor of Joints #3 and #4 to prevent the shaft from moving down due to the weight of the end effector while the power to the Controller is OFF or while the motor is in OFF status (MOTOR OFF). (The brake for Joint #4 is only installed to G6-**3**.)

Note that the brake will not work during the replacement procedure.
Move the shaft down to its lower limit before starting the replacement procedure by following the removal steps from (1) to (3).

Joint #3 motor Removal

(1) Turn ON the Controller.

(2) Push down the shaft to its lower limit while pressing the brake release switch. Be sure to keep enough space and prevent the end effector hitting any peripheral equipment.

The brake release switch is applied to both Joints #3 and #4. When the brake release switch is pressed, the respective brakes of the Joints #3 and #4 are released simultaneously. (The brake for Joint #4 is only installed to G6-**3**.)

Be careful of the shaft falling and rotating while the brake release switch is being pressed because the shaft may be lowered by the weight of an end effector.

(3) Turn OFF the Controller.

(4) Remove the arm top cover and the arm bottom cover.
For details, refer to *Maintenance: 3. Covers*.

(5) Cut off the wire tie used for binding the motor cables to the Joint #3 motor.

(6) Disconnect the following connectors.
Connectors X231, X31 (Hold the claw to remove.)
Connector X63

(7) Loosen the Z belt.

Loosen four bolts on the Joint #3 motor unit. Slide the Joint #3 motor unit to the end of the arm.

(8) Remove the Joint #3 motor unit from Arm #2.

Unscrew the bolts securing the Joint #3 motor unit. Remove the Z1 pulley from the Z belt. Pull the Joint #3 motor unit upward to remove.

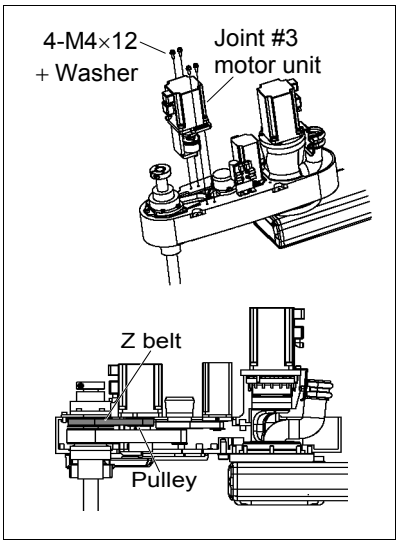

(9) Remove the Joint #3 motor from the Joint #3 motor unit.

(10) Remove the pulley from the Joint #3 motor.

There is a brass bushing in one of the set screw holes. Be careful not to lose it.

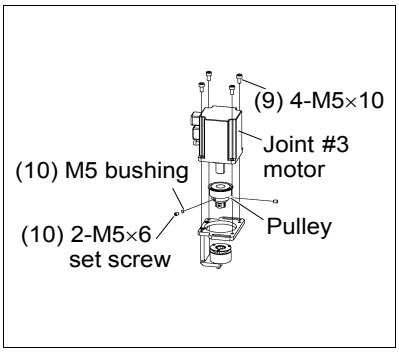

Joint #3 motor Installation

(1) Secure the pulley to the new motor shaft.

Be sure to fit the end face of the pulley to the end face of the motor shaft.

Tighten one of the set screws on the flat face of the motor shaft until the screw just touches the surface.

Insert a bushing into the other set screw hole to prevent damage to the motor shaft. Then, tighten both set screws.

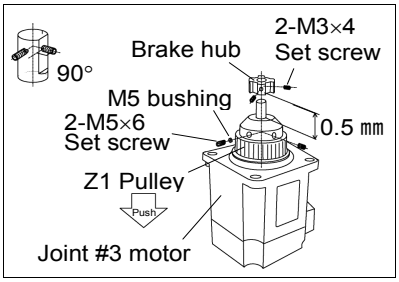

(2) Mount the Z plate to the Joint #3 motor.

Screw : 4-M5×12
Tightening torque : 7.0 N·m (71.3 kgf·cm)

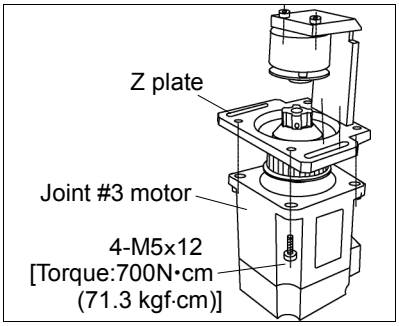

(3) Loosen the screws securing the pulley.

Push up the pulley to the brake and tighten the screw.

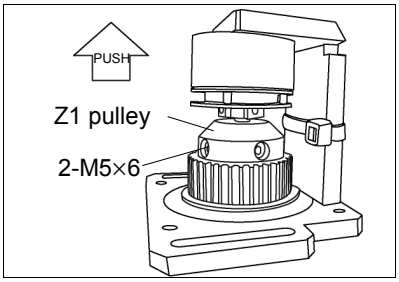

(4) Loosen the screws securing the hub.

Push down the hub to the pulley side.

Tighten the screws with the space 0.1 - 0.3 mm between.

NOTE

If the hub is secured with the space larger than 0.3 mm, the brake hub may interfere with the movable plate. This may grind the movable plate and cause metal powder.

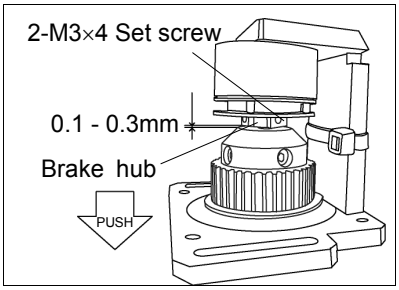

(5) Place the Joint #3 motor unit in the arm so that the motor cable faces toward the front of the arm.

Make sure that the rotor hub on the end face of the pulley is completely set in the fitting on the brake friction plate.

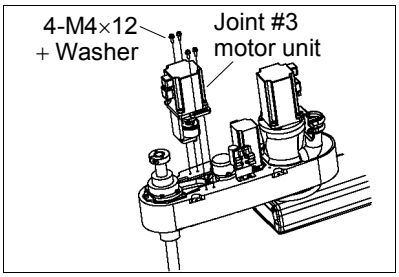

(6) Place the Z belt around the Z1 pulley and the Z2 pulley so that the gear grooves of the belt are fit into those of the pulleys completely.

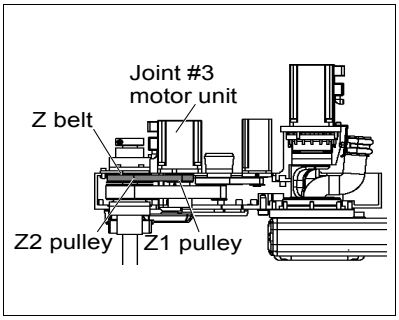

(7) Loosely secure the Joint #3 motor unit to Arm #2.

NOTE ☞ Loosely secure the Joint #3 motor unit to Arm #2 so that the motor unit can be moved by hand, and it will not tilt when pulled. If the unit is secured too loose or too tight, the belt will not have the proper tension.

(8) Apply the proper tension to the Z belt, and then secure the Joint #3 motor unit.

At this point, be careful of the battery board.
To remove the battery board, take out the set screws with cables connected.
Hexagonal wrench (Stubby type) makes it easier to tighten / remove screws.

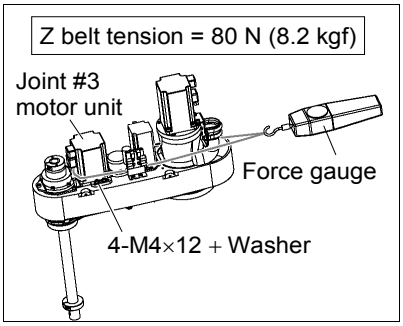

To do so, pass a suitable cord or string around the Joint #3 motor unit near its mounting plate. Then, pull the cord using a force gauge or similar tool to apply the specified tension shown in the figure on the right.

Make sure that the brake cables do not touch the pulley.

(9) Connect the connectors.
Connectors X231, X31, X63

(10) Re-bundle the cables in their original positions with a wire tie removed in step (5).

Do not allow unnecessary strain on the cables.

(11) Install the arm top cover and the arm bottom cover.
For details, refer to *Maintenance: 3. Covers*.

(12) Perform the calibration of Joint #3.
For details on the calibration method, refer to *Maintenance: 13. Calibration*.

7.2 Replacing the Timing Belt

	Name	Quantity	Note
Maintenance parts	Z belt (width 10 mm)	1	R13B030206
Tools	Hexagonal wrench (width across flats: 3 mm)	1	For M4 screw
	Nippers	1	For cutting wire tie
	Force gauge	1	Belt tension 80 N (8.2 kgf)
	Suitable cord (Length about 800 mm)	1	For belt tension
Material	Wire tie	2	

A brake is mounted on the motor of Joints #3 and #4 to prevent the shaft from moving down due to the weight of the end effector while the power to the Controller is OFF or while the motor is in OFF status (MOTOR OFF). (The brake for Joint #4 is only installed to G6-**3**.)

Note that the brake will not work during the replacement procedure.
Move the shaft down to its lower limit before the replacement procedure following the removal steps from (1) to (3).

Z belt Removal

(1) Turn ON the Controller.

(2) Push down the shaft to its lower limit while pressing the brake release switch. Be sure to keep enough space and prevent the end effector hitting any peripheral equipment.

The brake release switch is applied to both Joints #3 and #4. When the brake release switch is pressed, the respective brakes for Joints #3 and #4 are released simultaneously. (The brake for Joint #4 is only installed to G6-**3**.)

Be careful of the shaft falling and rotating while the brake release switch is being pressed because the shaft may be lowered by the weight of an end effector.

(3) Turn OFF the Controller.

(4) Remove the arm top cover and the arm bottom cover.
For details, refer to *Maintenance: 3. Covers*.

(5) Cut off the wire tie used for binding the motor cables to the Joint #3 motor.

(6) Disconnect the following connectors.
Connectors X231, X31 (Hold the claw to remove.)
Connector X32, X63

(7) Remove the Joint #3 motor unit from Arm #2.

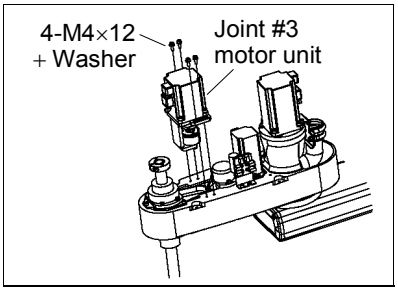

(8) Remove the Z belt.

Remove the bolts securing the spline plate and pull out the spline plate upward to remove it.

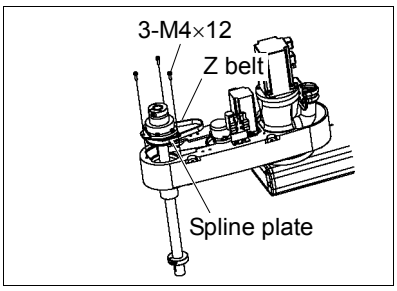

Z belt Installation

(1) Pass a new Z belt through the shaft from above, and then place it under the spline plate.

(2) Loosely secure the spline plate to Arm #2.

After moving the shaft up and down several times, secure the spline plate to Arm #2.

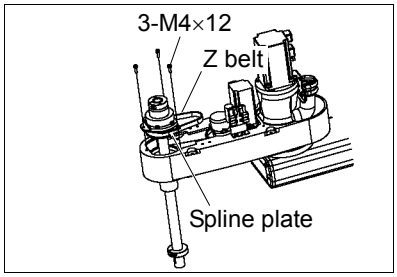

(3) Set the Joint #3 motor unit in the arm so that motor cable faces toward the back of the arm.

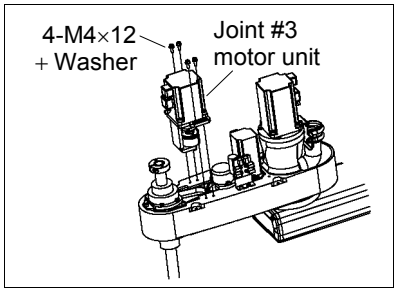

(4) Place the Z belt around the Z1 pulley and the Z2 pulley so that the gear grooves of the belt are fit into those of the pulleys completely.

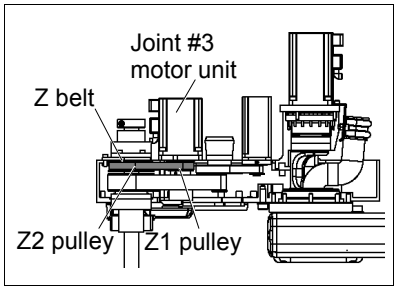

(5) Loosely secure the Joint #3 motor unit to Arm #2.

NOTE ☞ Loosely secure the Joint #3 motor unit to Arm #2 so that the motor unit can be moved by hand, and it will not tilt when pulled. If the unit is secured too loose or too tight, the belt will not have the proper tension.

(6) Apply the proper tension to the Z belt, and then secure the Joint #3 motor unit.

To do so, pass a suitable cord or string around the Joint #3 motor unit near its mounting plate. Then, pull the cord using a force gauge or similar tool to apply the specified tension shown in the figure on the right.

Make sure that the brake cables do not touch the pulley.

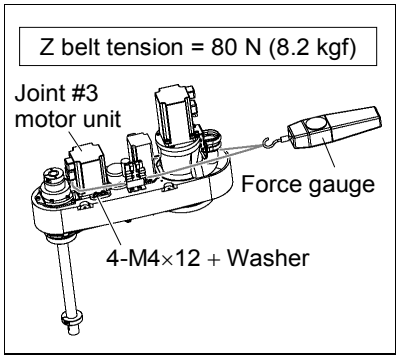

(7) Connect the connectors.

Connectors X231, X31, X32, X63

(8) Re-bundle the cables in their original positions with a wire tie removed in step (5).

Do not allow unnecessary strain on the cables.

(9) Install the arm top cover and the arm bottom cover.

For details, refer to *Maintenance: 3. Covers*.

(10) Perform the calibration of Joint #3.

For details, refer to *Maintenance: 13. Calibration*.

7.3 Replacing the Brake

	Name		Quantity	Note
Maintenance parts	Solenoid brake		1	R13B030501
Tools	Hexagonal wrench	width across flats: 1.5 mm	1	For M3 set screw
		width across flats: 2.5 mm	1	For M3 screw
		width across flats: 3 mm	1	For M4 screw
		width across flats: 4 mm	1	For M5 screw
	Nippers		1	For cutting wire tie
	Force gauge		1	Belt tension 80 N (8.2 kgf)
	Suitable cord (Length about 800 mm)		1	For belt tension
Material	Wire tie		3	

A brake is mounted on the motor of Joints #3 and #4 to prevent the shaft from moving down due to the weight of the end effector while the power to the Controller is OFF or while the motor is in OFF status (MOTOR OFF). (The brake for Joint #4 is only installed to G6-**3**.)

Note that the brake will not work during the replacement procedure.
Move the shaft down to its lower limit before the replacement procedure following the removal steps from (1) to (3).

Joint #3 brake Removal

(1) Turn ON the Controller.

(2) Push down the shaft to its lower limit while pressing the brake release switch. Be sure to keep enough space and prevent the end effector hitting any peripheral equipment.

The brake release switch is applied to both Joints #3 and #4. When the brake release switch is pressed, the respective brakes for Joints #3 and #4 are released simultaneously. (The brake for Joint #4 is only installed to G6-**3**.)

Be careful of the shaft falling and rotating while the brake release switch is being pressed because the shaft may be lowered by the weight of an end effector.

(3) Turn OFF the Controller.

(4) Remove the arm top cover and the arm bottom cover.
For details, refer to *Maintenance: 3. Covers*.

(5) Cut off the wire tie used for binding the motor cables to the Joint #3 motor.

(6) Disconnect the following connectors.
Connectors X231, X31 (Hold the claw to remove.)
Connector X32, X63

(7) Remove the Joint #3 motor unit from Arm #2.

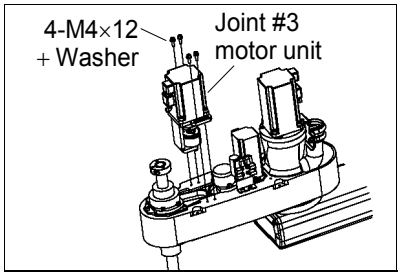

(8) Remove the Joint #3 motor from the Z plate.

(9) Remove the brake hub from the Z1 pulley.

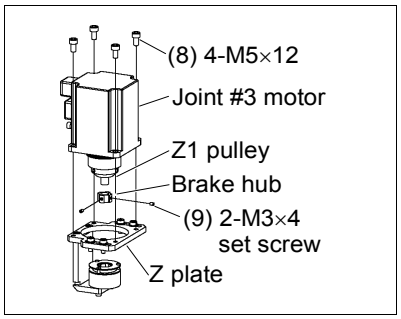

(10) Remove the brake from the brake plate.

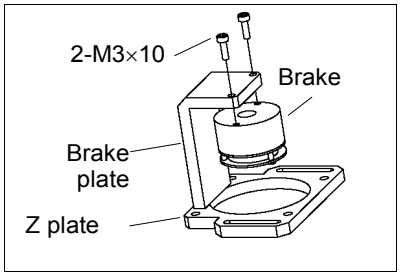

Joint #3 brake Installation

(1) Mount the brake to the brake plate.

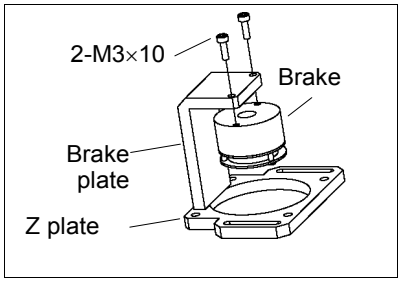

(2) Mount the brake hub to the Z1 pulley.

For the brake hub mounting procedure, refer to the section *7.1 Replacing Joint #3 Motor - Joint #3 motor installation - Step (1) - (4)*.

(3) Mount the motor unit to the Z plate.

Align the position of the disk on the brake and the hub.

When the brake disk is not aligned, turn ON the Controller and connect the connector X32. Press the brake release switch and release the brake to manually adjust the position.

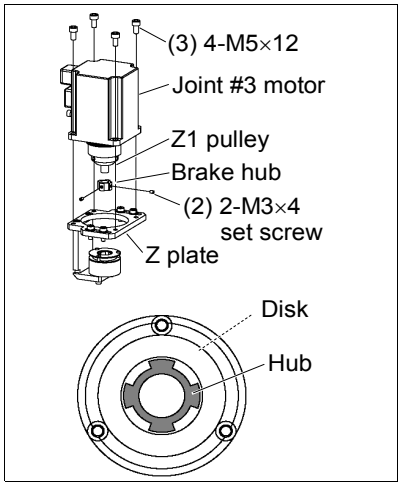

(4) Mount the Joint #3 brake unit to Arm #2 so that the open side faces toward the end of the arm.

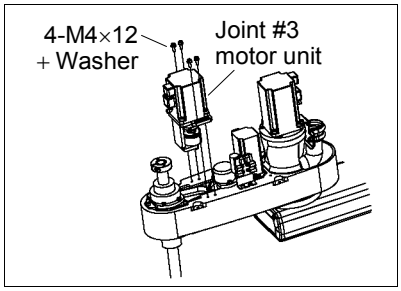

(5) Connect the connectors.

Connectors X231, X31, X32, X63

(6) Re-bundle the cables in their original positions with a wire tie removed in step (5).

Do not allow unnecessary strain on the cables.

(7) Install the arm top cover and the arm bottom cover.

For details, refer to *Maintenance: 3. Covers*.

(8) Perform the calibration of Joint #3.

For details, refer to *Maintenance: 13. Calibration*.

8. Arm #4

WARNING	■ Do not insert or pull out the motor connectors while the power to the robot system is turned ON. Inserting or pulling out the motor connectors with the power ON is extremely hazardous and may result in serious bodily injury as the Manipulator may move abnormally, and also may result in electric shock and/or malfunction of the robot system. ■ To shut off power to the robot system, pull out the power plug from the power source. Be sure to connect the AC power cable to a power receptacle. DO NOT connect it directly to a factory power source. ■ Before performing any replacement procedure, turn OFF the Controller and related equipment, and then pull out the power plug from the power source. Performing any replacement procedure with the power ON is extremely hazardous and may result in electric shock and/or malfunction of the robot system.

CAUTION	■ Be careful not to apply excessive shock to the motor shaft when replacing the motors. The shock may shorten the life cycle of the motors and encoder and/or damage them. ■ Never disassemble the motor and encoder. A disassembled motor and encoder will cause a positional gap and cannot be used again.

After parts have been replaced (motors, reduction gear units, brakes, timing belts, ball screw spline unit, etc.), the Manipulator cannot operate properly because a mismatch exists between the origin stored in each motor and its corresponding origin stored in the Controller.

After replacing the parts, it is necessary to match these origins.

The process of aligning the two origins is called “Calibration”.

Refer to *Maintenance: 13. Calibration* to perform the calibration.

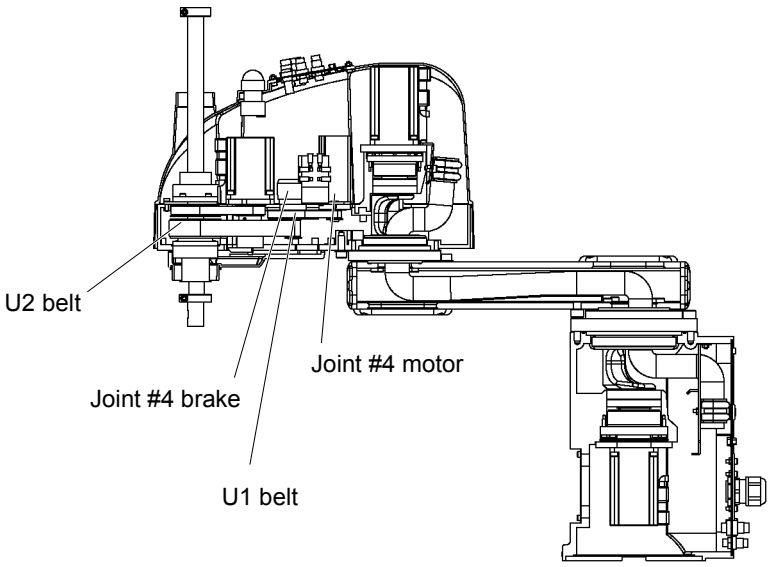

8.1 Replacing Joint #4 Motor

	Name		Quantity	Note
Maintenance parts	AC Servo Motor (100 W)		1	R13B000609
				R13B000617 (For S/N:1**** or later)
Tools	Hexagonal wrench	width across flats: 2 mm	1	For M4 set screw
		width across flats: 3 mm	1	For M4 screw
	Nippers		1	For cutting wire tie
	Force gauge		1	Belt tension 70 N (7.1 kgf)
	Suitable cord (Length about 800 mm)		1	For belt tension

A brake is mounted on the motor of Joints #3 and #4 to prevent the shaft from moving down due to the weight of the end effector while the power to the Controller is OFF or while the motor is in OFF status (MOTOR OFF). (The brake for Joint #4 is only installed to G6-**3**.)

Note that the brake will not work during the replacement procedure.
Move the shaft down to its lower limit before starting the replacement procedure by following the removal steps from (1) to (3).

Joint #4 motor Removal

(1) Turn ON the Controller.

(2) Push down the shaft to its lower limit while pressing the brake release switch. Be sure to keep enough space and prevent the end effector hitting any peripheral equipment.
The brake release switch is applied to both Joints #3 and #4. When the brake release switch is pressed, the respective brakes of the Joints #3 and #4 are released simultaneously. (The brake for Joint #4 is only installed to G6-**3**.)
Be careful of the shaft falling and rotating while the brake release switch is being pressed because the shaft may be lowered by the weight of an end effector.

(3) Turn OFF the Controller.

(4) Remove the arm top cover and the arm bottom cover.
For details, refer to *Maintenance: 3. Covers*.

(5) Cut off the wire tie used for binding the motor cables to the Joint #4 motor.

(6) Disconnect the following connectors. (X42: G6-**3** only)
Connectors X241, X41 (Hold the claw to remove.)
Connector X42, X64

(7) Remove the Joint #4 motor unit from Arm #2.

NOTE Be careful not to break the battery board.

Unscrew the bolts securing the Joint #4 motor unit to the Motor plate. Remove the U1 belt from the pulley. Pull the Joint #4 motor unit upward to remove.

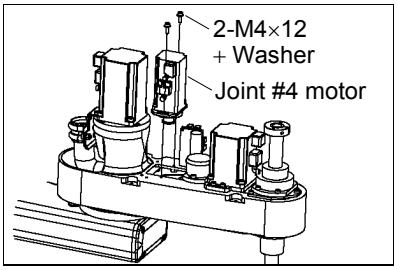

(8) Remove the pulley from the Joint #4 motor.

There is a brass bushing in one of the set screw holes. Be careful not to lose it.

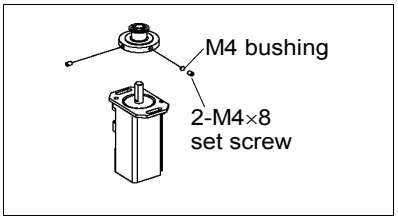

(9) Remove the motor plate from the Joint #4 motor.

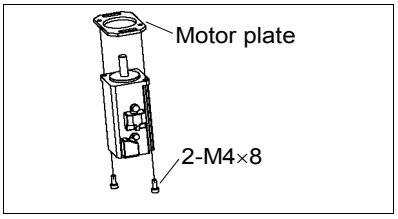

Joint #4 motor Installation

(1) Mount the motor plate to the Joint #4 motor.

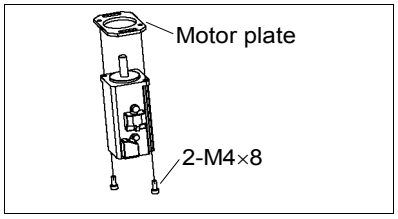

(2) Secure the pulley to the new Joint #4 motor.

Be sure to fit the end face of the pulley to the end face of the motor shaft.

Tighten one of the set screws on the flat face of the motor shaft until the screw just touches the surface.

Insert a bushing into the other set screw hole to prevent damage to the motor shaft. Then, tighten both set screws.

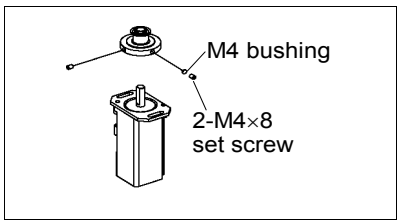

(3) Place the Joint #4 motor unit in the arm so that the motor cable faces toward the left of the arm.

(4) Place the U1 belt around the U1 pulley and the U2 large pulley (upper side) so that the gear grooves of the belt are fit into those of the pulleys completely.

(5) Loosely secure the Joint #4 motor unit to Arm #2.

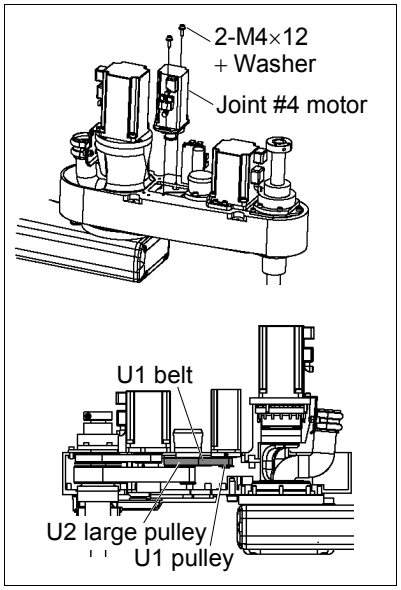

NOTE ☞ Loosely secure the Joint #4 motor unit to Arm #2 so that the motor unit can be moved by hand, and it will not tilt when pulled. If the unit is secured too loose or too tight, the belt will not have the proper tension.

(6) Apply the proper tension to the U1 belt, and then secure the Joint #4 motor unit.

To do so, pass a suitable cord or string around the Joint #4 motor unit near its mounting plate. Then, pull the cord using a force gauge or similar tool to apply the specified tension shown in the figure on the right.

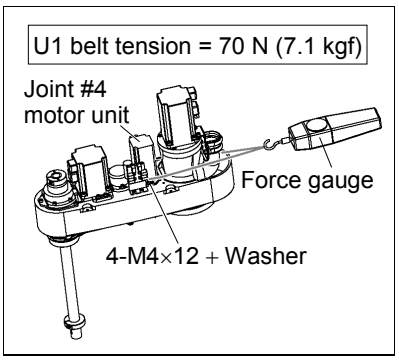

(7) Connect the connectors.

Connectors X241, X41, X42, and X64. (X42:G6-**3** only)

(8) Re-bundle the cables in their original positions with a wire tie removed in step (5).

Do not allow unnecessary strain on the cables.

(9) Install the arm top cover and the arm bottom cover.
For details, refer to *Maintenance: 3. Covers*.

(10) Perform the calibration of Joint #4.
For details on the calibration method, refer to *Maintenance: 13. Calibration*.

8.2 Replacing the Timing Belt

	Name	Quantity	Note
Maintenance parts	U1 belt (width 9 mm)	1	R13B030207
	U2 belt (width 20 mm)	1	R13B030208
Tools	Hexagonal wrench (width across flats: 3 mm)	1	For M4 screw
	Force gauge	1	Belt tension : 70N, 80N, 130N (7.1 kgf, 8.2 kgf, 13.2 kgf)
	Nippers	1	For cutting wire tie
	Suitable cord (Length about 800 mm)	1	For belt tension

A brake is mounted on the motor of Joints #3 and #4 to prevent the shaft from moving down due to the weight of the end effector while the power to the Controller is OFF or while the motor is in OFF status (MOTOR OFF). (The brake for Joint #4 is only installed to G6-**3**.)

Note that the brake will not work during the replacement procedure.
Move the shaft down to its lower limit before the replacement procedure following the removal steps from (1) to (3).

U1 belt Removal

(1) Turn ON the Controller.

(2) Push down the shaft to its lower limit while pressing the brake release switch. Be sure to keep enough space and prevent the end effector hitting any peripheral equipment.

The brake release switch is applied to both Joints #3 and #4. When the brake release switch is pressed, the respective brakes for Joints #3 and #4 are released simultaneously. (The brake for Joint #4 is only installed to G6-**3**.)

Be careful of the shaft falling and rotating while the brake release switch is being pressed because the shaft may be lowered by the weight of an end effector.

(3) Turn OFF the Controller.

(4) Remove the arm top cover and the arm bottom cover.
For details, refer to *Maintenance: 3. Covers*.

(5) Loosen the bolts securing the Joint #4 motor unit.

(6) Loosen the blots securing the Joint #4 intermediate shaft unit.

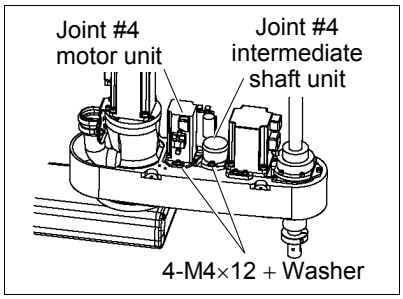

(7) Remove the U2 belt from the U2 small pulley and remove the U1 belt from the U1 pulley and U2 large pulley.

Put the Joint #4 motor unit and the Joint #4 intermediate shaft unit to the shaft side and remove the belt from the pulley.

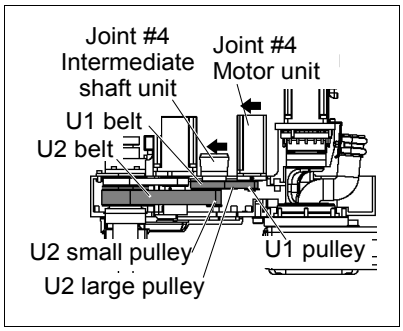

U1 belt Installation

(1) Set the U1 belt around the U1 pulley and U2 large pulley (upper side) so that the gear grooves of the belt are fit into those of the pulleys completely.

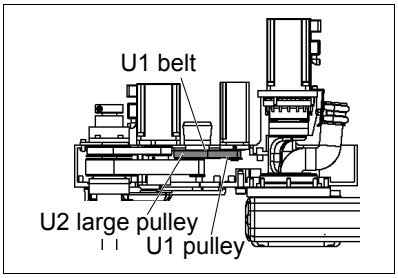

(2) Set the U2 belt around the U3 pulley and U2 small pulley so that the gear grooves of the belt are fit into those of the pulleys completely.

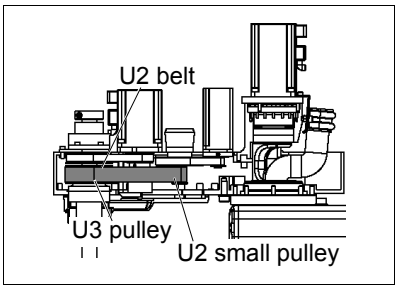

(3) Loosely secure the Joint #4 intermediate shaft unit, Joint #4 motor unit to Arm #2 in this order.

Make sure that the gear grooves of the belt are fit into those of the pulleys completely.

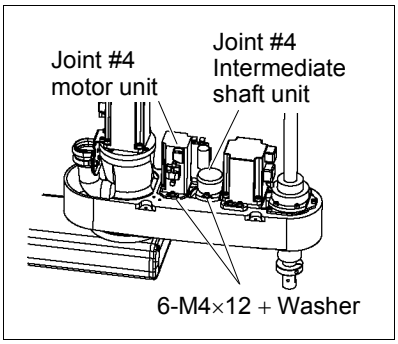

NOTE ☞ Loosely secure the units to Arm #2 so that the motor unit can be moved by hand, and it will not tilt when pulled. If the units are secured too loose or too tight, the belt will not have the proper tension.

(4) Apply the proper tension to the U2 belt, and then secure the Joint #4 intermediate shaft unit.

To do so, pass a suitable cord or string around the Joint #4 intermediate shaft unit near its mounting plate. Then, pull the cord using a force gauge or similar tool to apply the specified tension shown in the figure on the right.

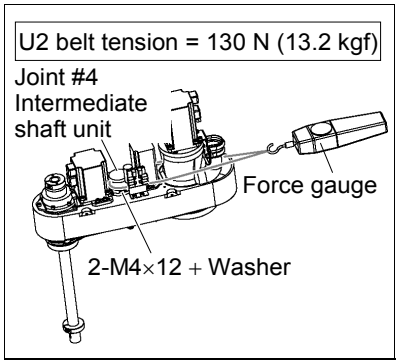

(5) Apply the proper tension to the U1 belt, and then secure the Joint #4 motor unit.

To do so, pass a suitable cord or string around the Joint #4 motor unit near its mounting plate. Then, pull the cord using a force gauge or similar tool to apply the specified tension shown in the figure on the right.

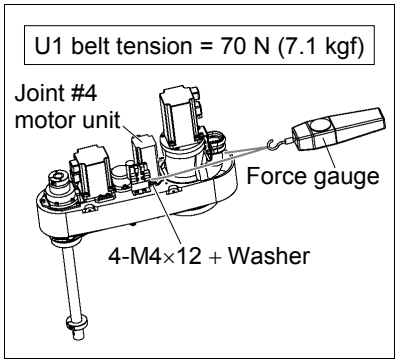

(6) Install the arm top cover and the arm bottom cover.
For details, refer to *Maintenance: 3. Covers*.

(7) Perform the calibration of Joint #3.
For details on the calibration method, refer to *Maintenance: 13. Calibration*.

U2 belt Removal

(1) Turn ON the Controller.

(2) Push down the shaft to its lower limit while pressing the brake release switch. Be sure to keep enough space and prevent the end effector hitting any peripheral equipment.

The brake release switch is applied to both Joints #3 and #4. When the brake release switch is pressed, the respective brakes for Joints #3 and #4 are released simultaneously. (The brake for Joint #4 is only installed to G6-**3**.)

Be careful of the shaft falling and rotating while the brake release switch is being pressed because the shaft may be lowered by the weight of an end effector.

(3) Turn OFF the Controller.

(4) Remove the arm top cover and the arm bottom cover.
For details, refer to *Maintenance: 3. Covers*.

(5) Cut off the wire tie used for binding the motor cables to the Joint #3 motor.

(6) Disconnect the following connectors.
Connectors X231, X31 (Hold the claw to remove.)
Connector X63, X32

(7) Remove the Joint #3 motor unit from Arm #2.

Remove the bolts securing the Joint #3 motor plate. Remove the Z belt from the pulley.
Pull the Joint #3 motor unit upward to remove.

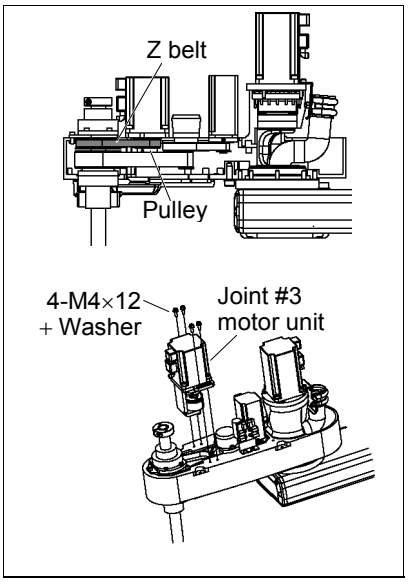

(8) Loosen the bolts securing the Joint #4 motor unit.

(9) Loosen the bolts securing the Joint #4 intermediate shaft unit.

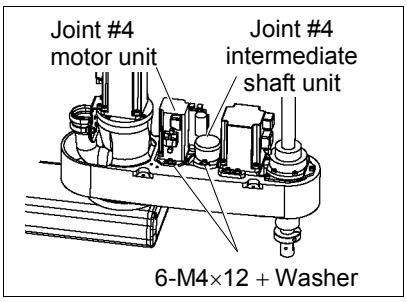

(10) Remove the U2 belt from the U2 small pulley and remove the U1 belt from the U1 pulley and U2 large pulley.

Put the Joint #4 motor unit and the Joint #4 intermediate shaft unit to the shaft side and remove the belt from the pulley.

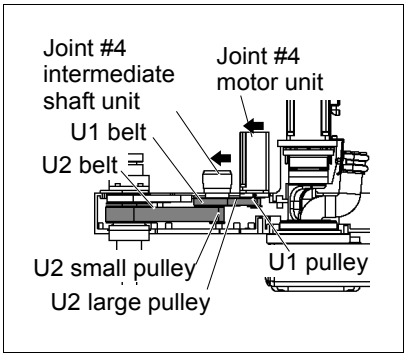

(11) Remove the U2 belt.

Remove the bolts securing the spline plate. Hold the spline plate up and remove the U2 belt from the shaft by pulling them up.

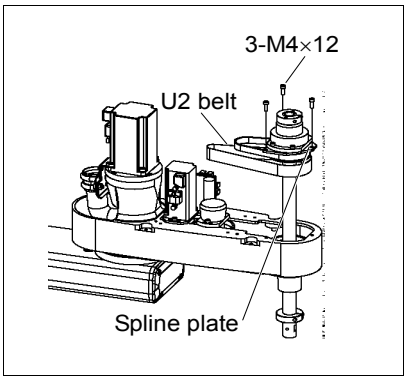

U2 belt Installation

(1) Pass the U2 belt through the shaft and mount the ball screw spline unit to Arm #2.

(2) Loosely secure the spline plate to Arm #2.

After moving the shaft up and down several times, secure the spline plate to Arm #2.

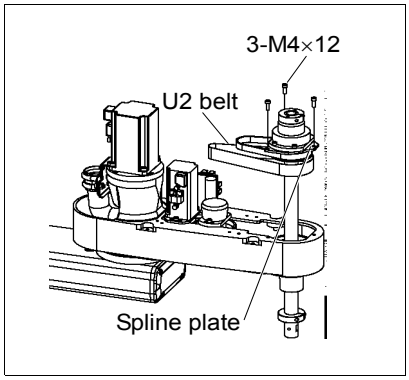

(3) Place the Joint #3 motor unit back to Arm #2.

(4) Set the Z belt around the Z1 pulley and Z2 pulley so that the gear grooves of the belt are fit into those of the pulleys completely.

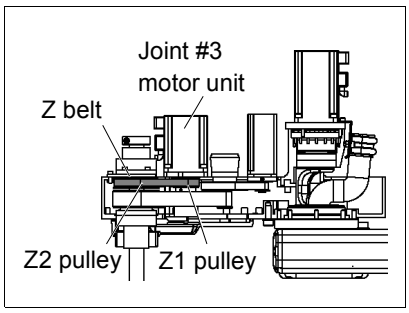

(5) Set the U1 belt around the U1 pulley and U2 large pulley (upper side) so that the gear grooves of the belt are fit into those of the pulleys completely.

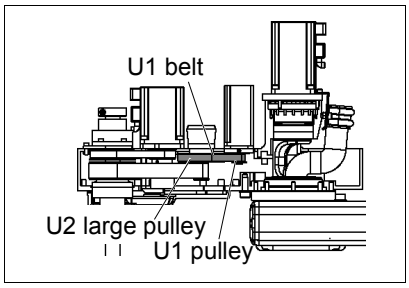

(6) Set the U2 belt around the U3 pulley and U2 small pulley so that the gear grooves of the belt are fit into those of the pulleys completely.

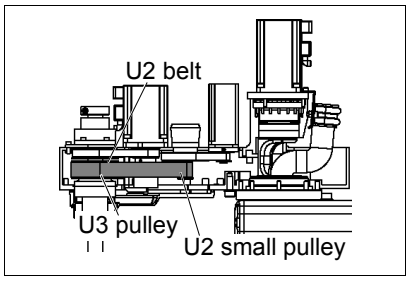

(7) Loosely secure the Joint #3 motor unit, Joint #4 intermediate shaft unit, Joint #4 motor unit to Arm #2 in this order.

Make sure that the gear grooves of the belt are fit into those of the pulleys completely.

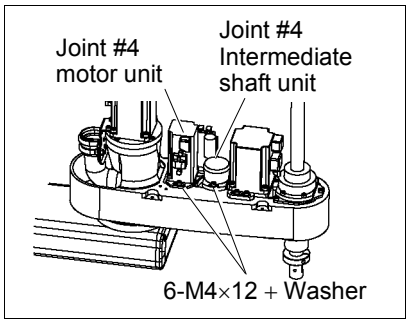

NOTE ☞ Loosely secure the units to Arm #2 so that the motor unit can be moved by hand, and it will not tilt when pulled. If the units are secured too loose or too tight, the belt will not have the proper tension.

(8) Apply the proper tension to the U2 belt, and then secure the Joint #4 intermediate shaft unit.

To do so, pass a suitable cord or string around the Joint #4 intermediate shaft unit near its mounting plate. Then, pull the cord using a force gauge or similar tool to apply the specified tension shown in the figure on the right.

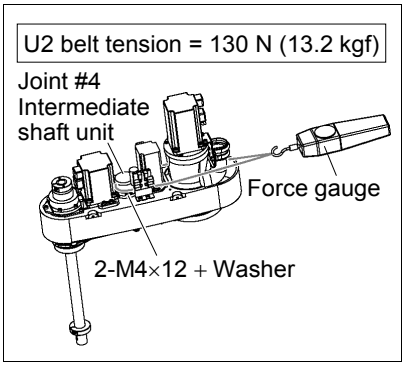

(9) Apply the proper tension to the U1 belt, and then secure the Joint #4 motor unit.

To do so, pass a suitable cord or string around the Joint #4 motor unit near its mounting plate. Then, pull the cord using a force gauge or similar tool to apply the specified tension shown in the figure on the right.

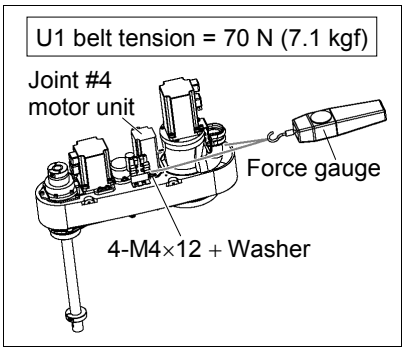

(10) Apply the proper tension to the Z belt, and then secure the Joint #3 motor unit.

To do so, pass a suitable cord or string around the Joint #3 motor unit near its mounting plate. Then, pull the cord using a force gauge or similar tool to apply the specified tension shown in the figure on the right.

Make sure that the brake cables do not touch the pulley.

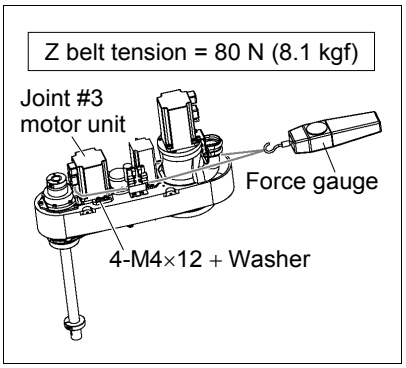

(11) Connect the connectors.

Connectors X231, X31, X32, X63.

(12) Re-bundle the cables in their original positions with a wire tie removed in step (5).

Do not allow unnecessary strain on the cables.

(13) Install the arm top cover and arm bottom cover.

For details, refer to *Maintenance: 3. Covers*.

(14) Perform the calibration of Joints #3 and #4.

For details, refer to *Maintenance: 13. Calibration*.

8.3 Replacing the Brake

	Name		Quantity	Note
Maintenance parts	Solenoid brake		1	R13B030502
Tools	Hexagonal wrench	width across flats: 1.3 mm	1	For M2.5 set screw
		width across flats: 2 mm	1	For M2.5 screw
	Nippers		1	For cutting wire tie
Material	Wire tie		1	

The brake for U axis is installed to G6-**3**.

A brake is mounted on the motor of Joints #3 and #4 to prevent the shaft from moving down due to the weight of the end effector while the power to the Controller is OFF or while the motor is in OFF status (MOTOR OFF). (The brake for Joint #4 is only installed to G6-**3**.)

Note that the brake will not work during the replacement procedure.
Move the shaft down to its lower limit before the replacement procedure following the removal steps from (1) to (3).

Joint #4 brake Removal

(1) Turn ON the Controller.

(2) Push down the shaft to its lower limit while pressing the brake release switch. Be sure to keep enough space and prevent the end effector hitting any peripheral equipment.

The brake release switch is applied to both Joints #3 and #4. When the brake release switch is pressed, the respective brakes for Joints #3 and #4 are released simultaneously. (The brake for Joint #4 is only installed to G6-**3**.)

Be careful of the shaft falling and rotating while the brake release switch is being pressed because the shaft may be lowered by the weight of an end effector.

(3) Turn OFF the Controller.

(4) Remove the arm top cover.
For details, refer to *Maintenance: 3.1 Arm Top Cover*.

(5) Disconnect the connector.
Connector X42

(6) Cut off the wire tie banding brake cables.

(7) Remove the rubber cap.

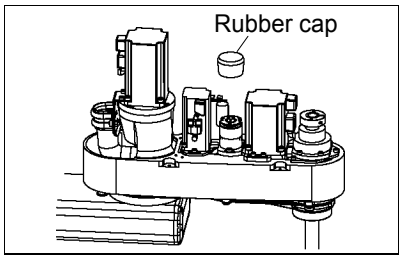

(8) Remove the brake hub.

(9) Remove the brake.

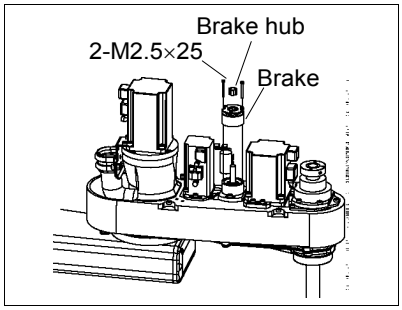

Joint #4 brake Installation

(1) Mount the brake to the Joint #4 intermediate shaft unit.

(2) Mount the brake hub to the Joint #4 intermediate shaft unit.

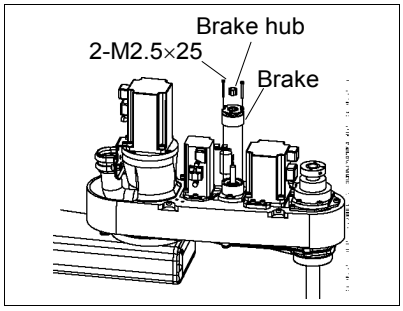

(3) Mount the rubber cap.

Insert 9 mm to the brake.

If the cap is inserted 10 mm or more, the rotation part touches the rubber cap and may result in malfunctions.

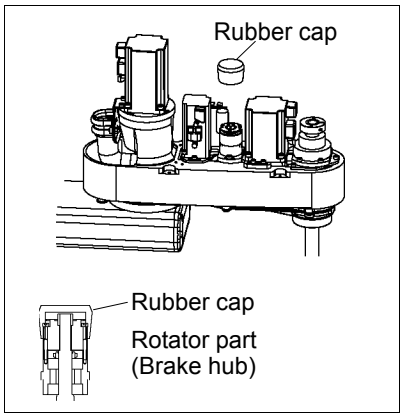

(4) Connect the connector.

Connector X42

(5) Re-bundle the cables in their original positions with a wire tie removed in step (6).

Do not allow unnecessary strain on the cables.

(6) Install the arm top cover.

For details, refer to *Maintenance: 3.1 Arm Top Cover*.

9. Bellows

NOTE

The bellows are provided in a unit of two pieces. The shape varies between the upper and lower bellows.
A large amount of dust is emitted when replacing the bellows.
Take the Manipulator to an outer room such as the room in front of the clean room's entrance, or take the necessary countermeasures to prevent dust emission before removing the bellows.

	Name		Quantity	Note
Maintenance parts	Bellows	150 mm	1	R13B030701
		300 mm		R13B030702
Tools	Cross-point screwdriver		1	For clamp band removal

Bellows Removal

(1) Remove the end effector.

(2) Remove the wires and tubes from the end effector.

(3) Turn ON the controller. Stop motor excitation. (MOTOR OFF)

(4) Loosen the two clamp bands on each bellows.

(5) Pull the bellows, rubber sheet, and clamp bands out of the shaft.

(The rubber sheet is not used for the upper bellows.)

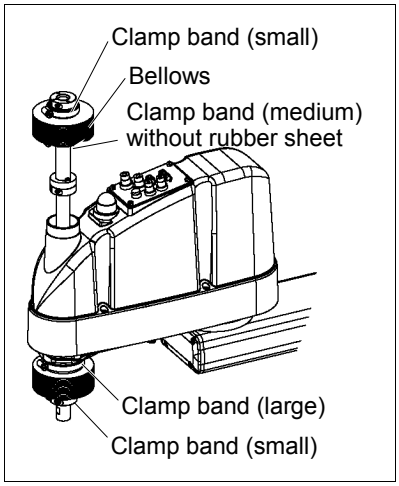

Bellows Installation

(1) To attach the upper bellows, move the shaft to its lower limit.
To attach the lower bellows, move the shaft to its upper limit.

To move the shaft up/down, press and hold the brake release switch.
Be sure to keep enough space and prevent the end effector hitting any peripheral equipment.

The brake release switch is applied to both Joints #3 and #4. When the brake release switch is pressed, the respective brakes of the Joints #3 and #4 are released simultaneously. (The brake for Joint #4 is only installed to G6-**3**.)

Be careful of the shaft falling and rotating while the brake release switch is being pressed because the shaft may be lowered by the weight of an end effector.

(2) Pass the shaft through the bellows from the larger joint.

(3) Secure the cover side of the bellows.

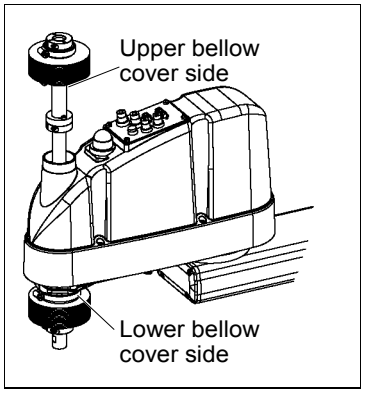

The bellows has two joints:
The larger joint must be attached to the cover side.
The smaller joint must be attached to the end face side of the shaft.
Be careful not to misplace the clamp bands. The clamp band has three sizes; small, medium, and large.

Attach the mounting part of the bellows until the end touches the cylindrical part of the cover.

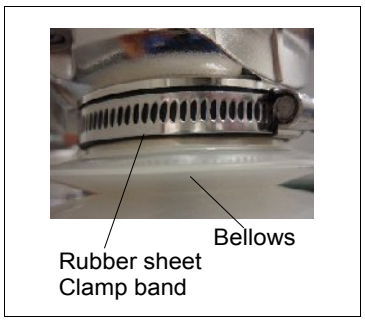

Attach the rubber sheet. Be sure to attach the rubber sheet so that no space is made between the bias cut. (No rubber sheet for the upper bellows cover side)

Then, secure them with clamp bands.

(4) Secure the end face side of the bellows to the shaft.

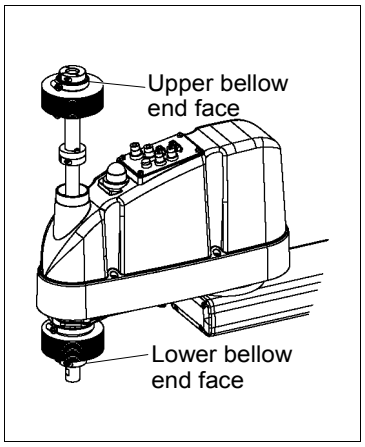

Cover the bearing case (black) on the end face of the shaft with the bellows mounting part.

Attach the rubber sheet. Be sure to attach the rubber sheet so that no space is made between the bias cut.

Then, secure them with clamp bands.

(5) After completing the attachment of the bellows, move the shaft up/down by hand several times and rotate Joint #4. Make sure that the bellows can expand and contract smoothly without any excessive force.

(6) Turn OFF the Controller and peripheral equipment.

(7) Attach the end effector.

(8) Connect the wires and tubes to the end effector.

10. Ball Screw Spline Unit

WARNING	■ Do not insert or pull out the motor connectors while the power to the robot system is turned ON. Inserting or pulling out the motor connectors with the power ON is extremely hazardous and may result in serious bodily injury as the Manipulator may move abnormally, and also may result in electric shock and/or malfunction of the robot system. ■ To shut off power to the robot system, pull out the power plug from the power source. Be sure to connect the AC power cable to a power receptacle. DO NOT connect it directly to a factory power source. ■ Before performing any replacement procedure, turn OFF the Controller and related equipment, and then pull out the power plug from the power source. Performing any replacement procedure with the power ON is extremely hazardous and may result in electric shock and/or malfunction of the robot system.

NOTE

After parts have been replaced (motors, reduction gear units, brakes, timing belts, ball screw spline unit, etc.), the Manipulator cannot operate properly because a mismatch exists between the origin stored in each motor and its corresponding origin stored in the Controller.

After replacing the parts, it is necessary to match these origins.

The process of aligning the two origins is called “Calibration”.

Refer to *Maintenance: 13. Calibration* to perform the calibration.

10.1 Greasing the Ball Screw Spline Unit

	Name	Quantity	Note
Grease	For Ball Screw Spline Unit (AFB grease)	Proper quantity	
Tools	Wiping cloth	1	For wiping grease (Spline shaft)
	Cross-point screwdriver	1	For clamp band removal Only for Cleanroom-model and Protected-model

NOTE

The brake release switch is applied to both Joints #3 and #4. When the brake release switch is pressed, the respective brakes of the Joints #3 and #4 are released simultaneously. (Joint #4 brake is installed to G6-**3** only.)
Be careful of the shaft falling and rotating while the brake release switch is being pressed because the shaft may be lowered by the weight of the end effector.

10.1.1 Standard-model (S type)

Cover the surrounding area such as the end effector and peripheral equipment in case the grease drips.

(1) Turn ON the Controller. Stop motor excitation. (MOTOR OFF)

(2) Move the arm to a position where Joint #3 can be moved in full stroke.

(3) Move the shaft to its upper limit manually while pressing the brake release switch.

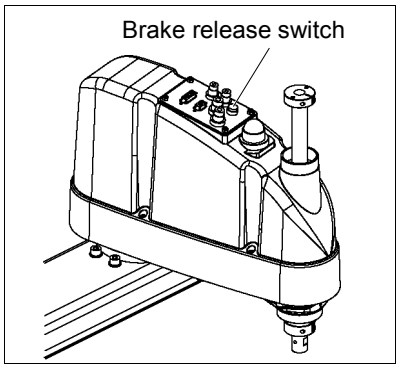

(4) Turn OFF the Controller.

(5) Wipe off the old grease from the upper part of the shaft, and then apply new grease to it.

When applying the new grease to the upper part of the shaft, directly fill the grooves on it by hand. Wipe off excess grease from the shaft.

(6) Turn ON the Controller.

(7) Move the shaft to its lower limit manually while pressing the brake release switch.

(8) Wipe off the old grease from the lower part of the shaft, and then apply new grease to it.

When applying the new grease to the lower part of the shaft, directly fill the grooves on it by hand. Wipe off excess grease from the shaft.

(9) Move the shaft up and down several times while pressing the brake release switch to smooth out the grease on the shaft. Wipe off excess grease from the shaft.

When wiping off the excess grease from the upper part of shaft, turn OFF the Controller and remove the arm top cover.
For details, refer to *Maintenance: 3.1 Arm Top Cover*.

10.1.2 Cleanroom-model, Protected-model (C, D with bellows, P type)

Cover the surrounding area such as the end effector and peripheral equipment in case the grease drips.

Upper Part of the Shaft

(1) Turn ON the Controller. Stop motor excitation. (MOTOR OFF)

(2) Move the arm to a position where Joint #3 can be moved in full stroke.

(3) Move the shaft to its lower limit manually while pressing the brake release switch.

(4) Loosen the clamp band under the bellows, and then lift the bellows.

(5) Move the shaft to its upper limit manually while pressing the brake release switch.

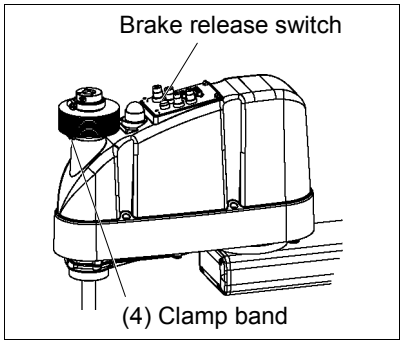

(6) Wipe off the old grease from the upper part of the shaft, and then apply new grease to it.

Directly fill the grooves on the shaft inside the bellows with grease by hand.
Wipe off excess grease from the shaft.

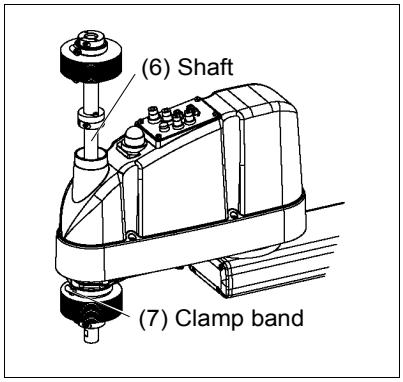

Lower Part of the Shaft

(7) Loosen the clamp band on the bellows, and then move the bellows downward.

(8) Move the shaft to its lower limit manually while pressing the brake release switch.

(9) Wipe off the old grease from the lower part of the shaft, and then apply new grease to it.

Directly fill the grooves on the shaft inside the bellows with grease by hand.
Wipe off excess grease from the shaft.

(10) Move the shaft up and down several times while pressing the brake release switch to smooth out the grease on the shaft. Wipe off excess grease from the shaft.

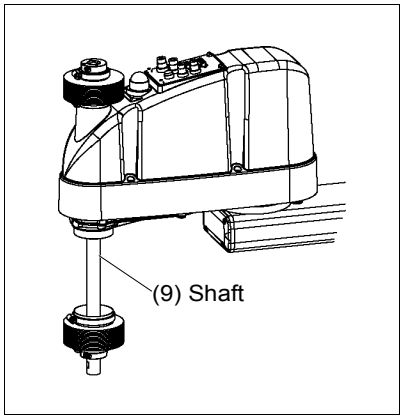

(11) Secure the bellows.
To attach the upper bellows, move the shaft to its lower limit.
To attach the lower bellows, move the shaft to its upper limit.
To move the shaft up/down, press and hold the brake release switch.

Attach the mounting part of the bellows until it touches the cylindrical part of eth cover.

Attach the rubber sheet. Be sure to attach the rubber sheet so that no space is made between the bias cut. (No rubber sheet for the upper bellows cover side)

Then, secure them with clamp bands.

10.2 Replacing the Ball Screw Spline Unit

A brake is mounted on the motor of Joints #3 and #4 to prevent the shaft from moving down due to the weight of the end effector while the power to the Controller is OFF or while the motor is in OFF status (MOTOR OFF). (The brake for Joint #4 is only installed to G6-**3**.)

Note that the brake will not work during the replacement procedure.
Move the shaft down to its lower limit before starting the replacement procedure by following the removal steps from (1) to (3).

	Name	Quantity	Note
Maintenance parts	Ball Screw Spline Unit	1	Each manipulator model (Refer to *Maintenance: 14. Maintenance Parts*)
Grease	For Ball Screw Spline Unit (AFB grease)	Proper quantity	
Tools	Hexagonal wrench (width across flats: 3 mm)	1	For M4 screw
	Nippers	1	For cutting wire tie
	Force gauge	1	Belt tension 70N, 80N, 130N (7.1 kgf, 8.1 kgf, 13.2 kgf)
	Suitable cord (Length about 1000 mm)	1	For belt tension
	Wiping cloth	1	For wiping grease
Material	Wire tie	2	

Ball screw spline unit Removal

(1) Turn ON the Controller.

(2) Push down the shaft to its lower limit while pressing the brake release switch. Be sure to keep enough space and prevent the end effector hitting any peripheral equipment.

The brake release switch is applied to both Joints #3 and #4. When the brake release switch is pressed, the respective brakes of the Joints #3 and #4 are released simultaneously. (The brake for Joint #4 is only installed to G6-**3**.)

Be careful of the shaft falling and rotating while the brake release switch is being pressed because the shaft may be lowered by the weight of an end effector.

(3) Turn OFF the Controller.

(4) Detach the wires/tubes from the end effector, and remove the end effector.

(5) This step is only for Cleanroom-model and Protected-model (C, D with bellows option, P).

Remove the bellows. For details, refer to *Maintenance: 9. Bellows*.

(6) Remove the arm top cover and arm bottom cover.
For details, refer to *Maintenance: 3. Covers*.

(7) Cut off the wire tie banding motor cables to the Joint #3 motor.

(8) Disconnect the connectors.
Connectors X231, X31 (Hold the claw to remove.)
Connector X32

(9) Remove the Joint #3 motor from Arm #2.

Remove the bolts securing the Joint #3 motor plate. Remove the Z belt from the pulley. Remove the motor by pulling it up.

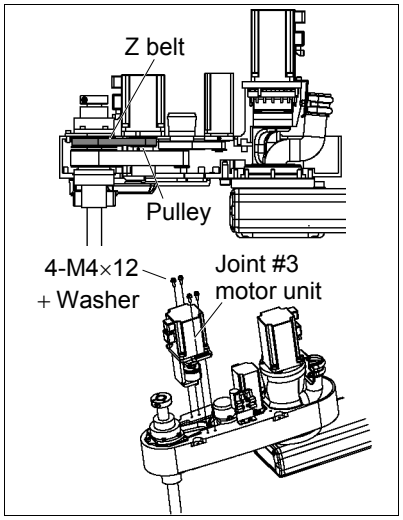

(10) Loosen the bolts securing the Joint #4 motor unit.

(11) Loosen the bolts securing the Joint #4 intermediate shaft unit.

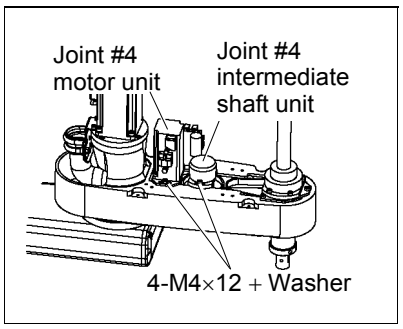

(12) Remove the U2 belt from the U2 small pulley and remove the U1 belt from the U1 pulley and U2 large pulley.

(13) Put the Joint #4 motor unit and the Joint #4 intermediate shaft unit to the shaft side and remove the belt from the pulley.

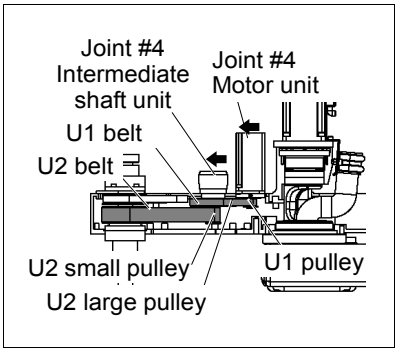

(14) Remove the U2 belt and Z belt.

Remove the bolts securing the spline plate. Hold the spline plate up and remove the U2 belt and Z belt from the shaft by pulling them up.

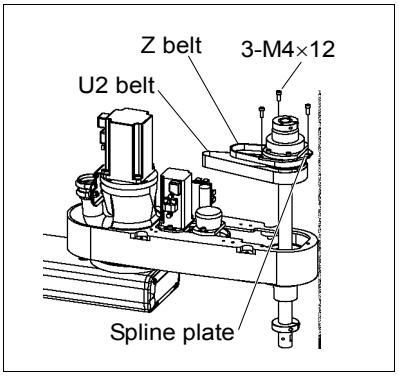

(15) Remove the nut mounting screws of the ball screw spline shaft on the lower part of Arm #2.

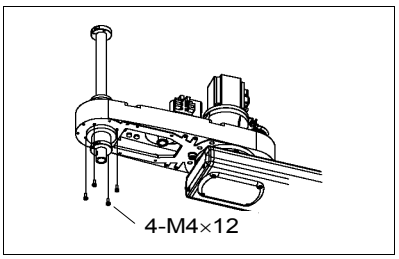

(16) Pull out the ball screw spline unit from Arm #2.

Ball screw spline unit Installation

(1) Pass the U2 belt and Z belt through the shaft and mount the ball screw spline unit to Arm #2.

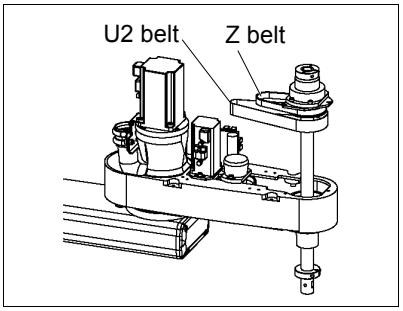

(2) Secure the nut mounting screws of the ball screw spline shaft on lower side of Arm #2.

Be sure to keep the timing belt from being stuck between the nut and Arm #2.

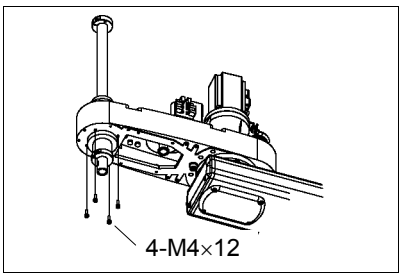

(3) Loosely secure the spline plate to Arm #2.

After moving the shaft up and down several times, secure the spline plate to Arm #2.

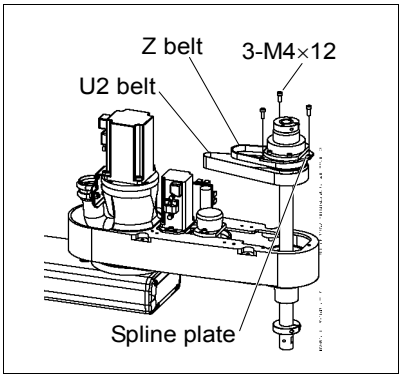

(4) Place the Joint #3 motor unit back to Arm #2.

(5) Set the Z belt around the Z1 pulley and Z2 pulley so that the gear grooves of the belt are fit into those of the pulleys completely.

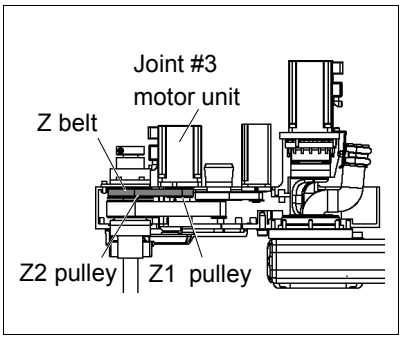

(6) Set the U1 belt around the U1 pulley and U2 large pulley (upper side) so that the gear grooves of the belt are fit into those of the pulleys completely.

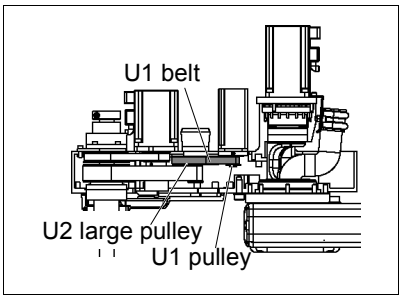

(7) Set the U2 belt around the U3 pulley and U2 small pulley so that the gear grooves of the belt are fit into those of the pulleys completely.

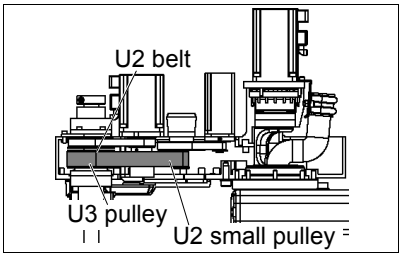

(8) Loosely secure the Joint #3 motor unit, Joint #4 intermediate shaft unit, Joint #4 motor unit to Arm #2 in this order.

Make sure that the gear grooves of the belt are fit into those of the pulleys completely.

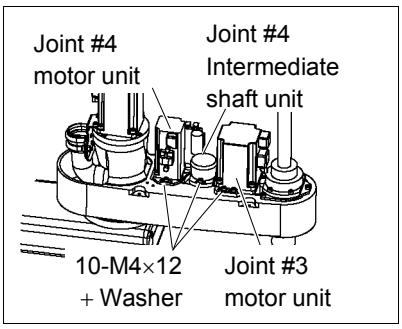

NOTE ☞ Loosely secure the Joint #3 motor unit to Arm #2 so that the motor unit can be moved by hand, and it will not tilt when pulled. If the unit is secured too loose or too tight, the belt will not have the proper tension.

(9) Apply the proper tension to the U2 belt, and then secure the Joint #4 intermediate shaft unit.

To do so, pass a suitable cord or string around the Joint #4 intermediate shaft unit near its mounting plate. Then, pull the cord using a force gauge or similar tool to apply the specified tension shown in the figure on the right.

If the string is touching the battery board, remove mounting screw for the battery board to put it aside.

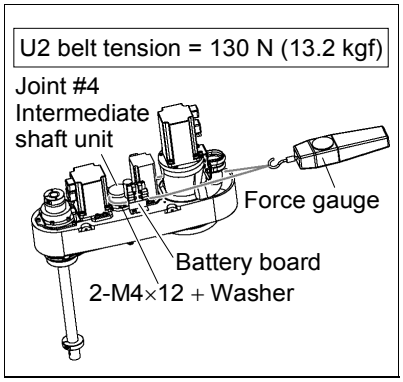

(10) Apply the proper tension to the U1 belt, and then secure the Joint #4 motor unit.

To do so, pass a suitable cord or string around the Joint #4 motor unit near its mounting plate. Then, pull the cord using a force gauge or similar tool to apply the specified tension shown in the figure on the right.

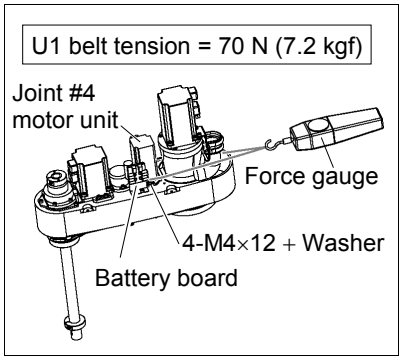

(11) Apply the proper tension to the Z belt, and then secure the Joint #3 motor unit.

To do so, pass a suitable cord or string around the Joint #3 motor unit near its mounting plate. Then, pull the cord using a force gauge or similar tool to apply the specified tension shown in the figure on the right.

Make sure that the brake cables do not touch the pulley.

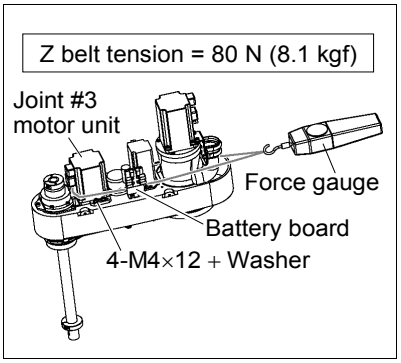

(12) Connect the connectors.

Connectors X231, X31, and X32

(13) Re-bundle the cables in their original positions with a wire tie removed in step (4).

Do not allow unnecessary strain on the cables.

(14) If the position of the lower limit mechanical stop was changed for area limit, secure it to the proper position.

(15) Grease the shaft.

For details, refer to *Maintenance: 10.1. Greasing the Ball Screw Spline Unit*.

(16) Install the arm top cover and arm bottom cover.

For details, refer to *Maintenance: 3. Covers*.

(17) Turn OFF the Controller and peripheral equipment.

(18) Install the end effector, and connect wires and tubes to the end effector.

(19) This step is only for Cleanroom-model and Protected-model (C, D with bellows option, P).

Install the bellows.

For details, refer to *Maintenance: 9. Bellows*.

(20) Perform the calibration of Joints #3 and #4.

For details, refer to *Maintenance: 13. Calibration*.

11. Lithium Battery

WARNING	■ Do not insert or pull out the motor connectors while the power to the robot system is turned ON. Inserting or pulling out the motor connectors with the power ON is extremely hazardous and may result in serious bodily injury as the Manipulator may move abnormally, and also may result in electric shock and/or malfunction of the robot system. ■ To shut off power to the robot system, pull out the power plug from the power source. Be sure to connect the AC power cable to a power receptacle. DO NOT connect it directly to a factory power source. ■ Before performing any replacement procedure, turn OFF the Controller and related equipment, and then pull out the power plug from the power source. Performing any replacement procedure with the power ON is extremely hazardous and may result in electric shock and/or malfunction of the robot system.

CAUTION	■ Use meticulous care when handling the lithium battery. Improper handling of the lithium battery as mentioned below is extremely hazardous, may result in heat generation, leakage, explosion, or inflammation, and may cause serious safety problems. <Improper Handling> ・Battery Charge ・Deformation by Pressure ・Disassembly ・Short-circuit (Polarity; Positive/Negative) ・Incorrect Installation ・Heating (85°C or more) ・Exposing to Fire ・Soldering the terminal of the lithium battery directly ・Forced Discharge ■ When disposing of the battery, consult with the professional disposal services or comply with the local regulation. Spent battery or not, make sure the battery terminal is insulated. If the terminal contacts with the other metals, it may short and result in heat generation, leakage, explosion, or inflammation.

In case of the low lithium battery power, the error to warn the voltage reduction occurs at the Controller startup (the software startup). All position data will be lost and you will need to calibrate all joints.

The life span of the lithium battery varies depending on the energizing hours and installation environment of the Controller. It is about 3 years as a rough guide (when the Controller is connected to power for 8 hours a day). When the Controller is not connected to power, the battery consumption will significantly increase compared to when the Controller is energized. If warnings of voltage reduction occur, replace the lithium metal battery even if it has not reached the above product life.

NOTE

For the EPSON RC+ 7.0 Ver. 7.2.x or later (firmware Ver.7.2.x.x or later), the recommended replacement time for the battery can be checked in the [Maintenance] dialog box of the EPSON RC+ 7.0.
For details, refer to the following manual.
Robot Controller RC700 / RC700-A "Maintenance 6. Alarm"

NOTE

For the EPSON RC+ 5.0 Ver. 5.4.7 or later (firmware Ver.1.16.4.x or 1.24.4.x or later), the recommended replacement time for the battery can be checked in the [Maintenance] dialog box of the EPSON RC+ 5.0.

For details, refer to the following manual.
Robot Controller RC180 "Appendix. Alarm"

The battery may run out if it passes the recommended replacement time.

If no warnings of voltage reduction occur, the calibration for all joints is not necessary. You need to perform calibration if the position moves from the originals after replaced the battery.

Always use the lithium battery and battery board designated by us.
(Refer to *Maintenance: 14. Maintenance Parts List*.)

Be careful of the battery polarity to connect it correctly.

	Name	Quantity	Note
Maintenance parts	Battery unit (Lithium battery)	1	R13ZA00600300
	Battery board	1	R13B041202
Tools	Nippers	1	For cutting wire tie
	Hexagonal wrench (width across flats: 3 mm)	1	For M4 screw
Material	Wire tie	2	For fixing battery unit (battery)
			For fixing cable

11.1 Replacing the Battery Unit (Lithium Battery)

Battery unit (lithium battery) Removal

(1) Turn OFF the Controller.

(2) Push down the shaft to its lower limit while pressing the brake release switch. Be sure to keep enough space and prevent the end effector hitting any peripheral equipment.

The brake release switch is applied to both Joints #3 and #4. When the brake release switch is pressed, the respective brakes of the Joints #3 and #4 are released simultaneously. (The brake for Joint #4 is only installed to G6-**3**.)

Be careful of the shaft falling and rotating while the brake release switch is being pressed because the shaft may be lowered by the weight of an end effector.

(3) Remove the arm top cover.
For details, refer to *Maintenance: 3.1 Arm Top Cover*.

(4) Connect the connector of the new lithium battery to the battery board.

User the unused connector of the two connectors X60A, X60B on the upper part of the battery board.

Be sure to connect the connector of the new battery before disconnecting the old battery. If the current battery is disconnected before connecting the new battery, the robot will lose the home position data and the calibration must be executed again.

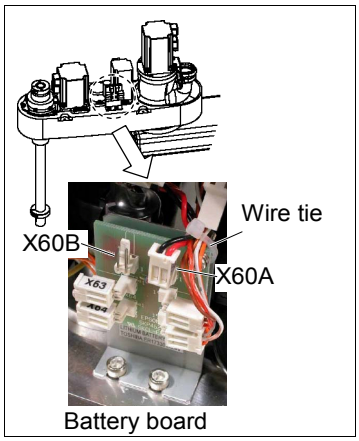

NOTE

Except when the Power-Low warning is appearing.

(5) Cut off the wire tie banding the lithium battery and remove the lithium battery.

(6) Cut off the wire tie banding the lithium battery, Remove the battery.

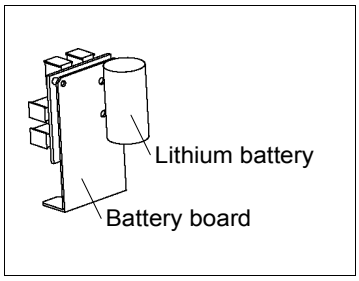

Battery unit (lithium battery) Installation

(1) Mount the new lithium battery to the battery board.

(2) Fix the cable of lithium battery and connector cable connecting to battery board with wire tie. Refer to the procedure (4).

(3) Mount the arm top cover.
For details, refer to *Maintenance: 3.1 Arm Top Cover*.

(4) Turn ON the Controller.

(5) Check if the Manipulator moves to points (poses) correctly.

To do so, select 2 points (poses) or more from the registered points (poses) and move the Manipulator to the points (poses).

(6) If the Manipulator does not move to the points (poses) correctly, perform the calibration of all joints and axes.

For details, refer to *Maintenance: 13. Calibration*.

11.2 Replacing the Battery Board

After battery board and parts have been replaced (motors, reduction gear units, brakes, timing belts, ball screw spline unit, etc.), the Manipulator cannot operate properly because a mismatch exists between the origin stored in each motor and its corresponding origin stored in the Controller.
After replacing the parts, it is necessary to match these origins.

The process of aligning the two origins is called “Calibration”.

Refer to *Maintenance: 13. Calibration* to perform the calibration.

Battery board Removal

(1) Turn OFF the Controller.

(2) Push down the shaft to its lower limit while pressing the brake release switch. Be sure to keep enough space and prevent the end effector hitting any peripheral equipment.

The brake release switch is applied to both Joints #3 and #4. When the brake release switch is pressed, the respective brakes of the Joints #3 and #4 are released simultaneously. (The brake for Joint #4 is only installed to G6-**3**.)

Be careful of the shaft falling and rotating while the brake release switch is being pressed because the shaft may be lowered by the weight of an end effector.

(3) Remove the arm top cover.
For details, refer to
Maintenance: 3.1 Arm Top Cover.

(4) Disconnect the wiring tie connecting the connector cable.

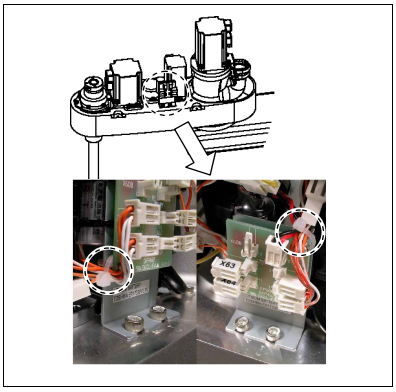

(5) Disconnect the connectors X61, X62, X63, and X64 connected to the battery board.

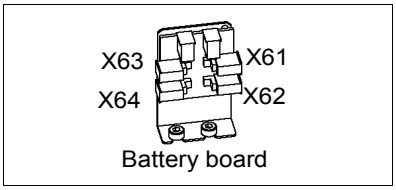

(6) Loosen the screws securing the battery board and remove the battery board.

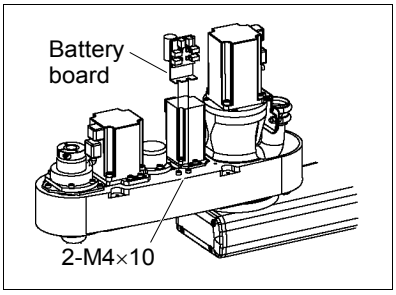

Battery board Installation

(1) Mount the new battery board and secure it with screws.

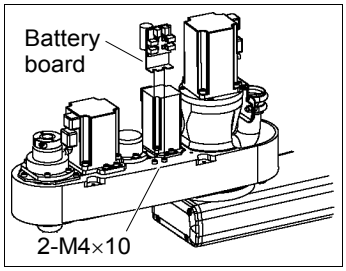

(2) Connect the connectors.
Connectors X61, X62, X63, X64

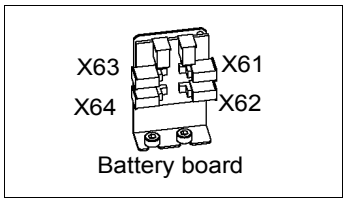

(3) Fix the connector cable with wiring tie. Refer to procedure (4).

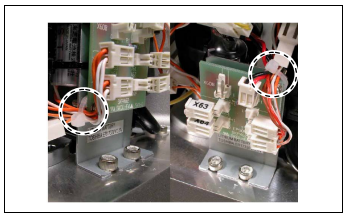

(4) Mount the arm top cover.
For details, refer to *Maintenance: 3.1 Arm Top Cover*.

(5) Turn ON the Controller.

(6) Perform the calibration of all joints.
For details, refer to *Maintenance: 13. Calibration*.

12. LED Lamp

WARNING	■ Do not insert or pull out the motor connectors while the power to the robot system is turned ON. Inserting or pulling out the motor connectors with the power ON is extremely hazardous and may result in serious bodily injury as the Manipulator may move abnormally, and also may result in electric shock and/or malfunction of the robot system. ■ To shut off power to the robot system, pull out the power plug from the power source. Be sure to connect the AC power cable to a power receptacle. DO NOT connect it directly to a factory power source. ■ Before performing any replacement procedure, turn OFF the Controller and related equipment, and then pull out the power plug from the power source. Performing any replacement procedure with the power ON is extremely hazardous and may result in electric shock and/or malfunction of the robot system.

	Name	Quantity	Note
Maintenance parts	LED Lamp	1	R13A030000200
Tools	Cross-point screwdriver	1	For wire removal
	Nippers	1	
Material	Wire tie	1	

LED Lamp Removal

(1) Remove the arm top cover.
For details, refer to *Maintenance: 3.1 Arm Top Cover*.

(2) Disconnect the X1 and X2 terminals from the LED.

(3) Turn the lens counterclockwise to remove it. Then, turn the lens holder counterclockwise to remove it.

(4) Remove the LED from the arm top cover.

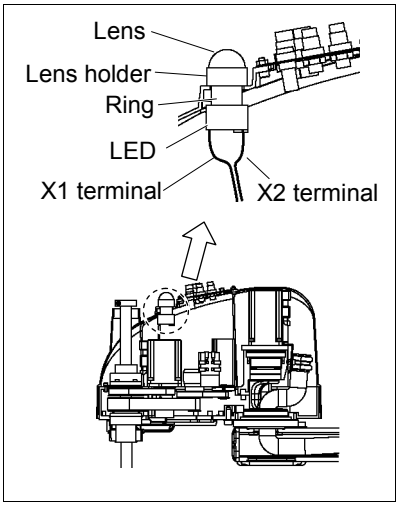

LED Lamp Installation

(1) Connect the X1 and X2 terminals to the LED.

Each terminal must be connected to its terminal number on the LED.

(2) Put the arm top cover between the ring and lens holder, and then mount the LED on the arm top cover.

(3) Install the lens to the lens holder.

(4) Install the arm top cover.
For details, refer to *Maintenance: 3.1 Arm Top Cover*.

13. Calibration

13.1 About Calibration

After parts have been replaced (motors, reduction gear units, timing belts, etc.), the Manipulator cannot execute the positioning properly because a mismatch exists between the origin stored in each motor and its corresponding origin stored in the Controller.
After replacing the parts, it is necessary to match these origins.

The process of aligning the two origins is called "Calibration". Note that calibration is not the same as teaching*.

*: "Teaching" means to teach the Controller coordinate points (including poses) anywhere in the operating area of the Manipulator.

WARNING	■ To ensure safety, a safeguard must be installed for the robot system. For details on the safeguard, refer to EPSON RC+ User's Guide: *2.4 Installation and Design Precautions.* ■ Before operating the robot system, make sure that no one is inside the safeguarded area. The robot system can be operated in the mode for teaching even when someone is inside the safeguarded area. The motion of the Manipulator is always in restricted (low speeds and low power) status to secure the safety of an operator. However, operating the robot system while someone is inside the safeguarded area is extremely hazardous and may result in serious safety problems in case that the Manipulator moves unexpectedly.

Command Input

Calibration procedures include the process to input commands. Select EPSON RC+ menu-[Tools]-[Command Window] to use the command window.

The information above is omitted in the calibration procedure.

Jog Motion

The process to set the jog motion is included in the [Jog & Teach] page of the Robot Manager. Select EPSON RC+ menu-[Tools]-[Robot Manager] and select the [Jog & Teach] tab to use the [Jog & Teach] page.

The page above is indicated as [Jog & Teach] in the calibration procedure.

In the following calibration procedure, it uses EPSON RC+ 5.0. When the procedure is different for each type of software, see your software type. EPSON RC+ 5.0 EPSON RC+ 6.0 EPSON RC+ 7.0

13.2 Calibration Procedure

EPSON RC+ has a wizard for calibration.

This section indicates the calibration using the calibration wizard of EPSON RC+.

EPSON RC+ 5.0

You can also calibrate with TP1 in TEACH mode. For details, refer to RC180/RC90 option Teach pendant *TP1 manual Operation: 2.7 Calibrating Origin : E2 Series / G Series / RS series*.

The same calibration procedure is used for each joint.
The steps below are calibration using Joint #1. Follow the steps below to calibrate other joints.

When coordinates for the Manipulator working point require calculation, it is important for Joint #2 to be calibrated accurately. Execute the procedure in "Calibration Using Right / Left Arm Orientations" to accurately calibrate Joint #2. For details, refer to *Maintenance: 13.3 Accurate Calibration of Joint #2*.

When calibrating Joint #4, you must calibrate Joint #3 and #4 at the same time. You cannot calibrate Joint #4 alone because of the structure of the Manipulator.

NOTE

If Err9716 or 5016 (Power supply failure of the absolute encoder. Replace the battery. Check the robot internal wiring) occurs, apply the procedure of *Maintenance: 13.4 Calibration Procedure without using Calibration Wizard - 3. Encoder Initialization* and then, start the calibration wizard.
The reference point (a point to check the accuracy) needs to be specified for calibration.

(1) Start the calibration wizard.

EPSON RC+ 5.0

i. Select EPSON RC+ menu-[Setup]-[Controller] to display the [Controller] dialog.

ii. Select [Robot]-[Calibration] to display [Robot Calibration].

iii. Select the joint and click the <Calibrate…> button.

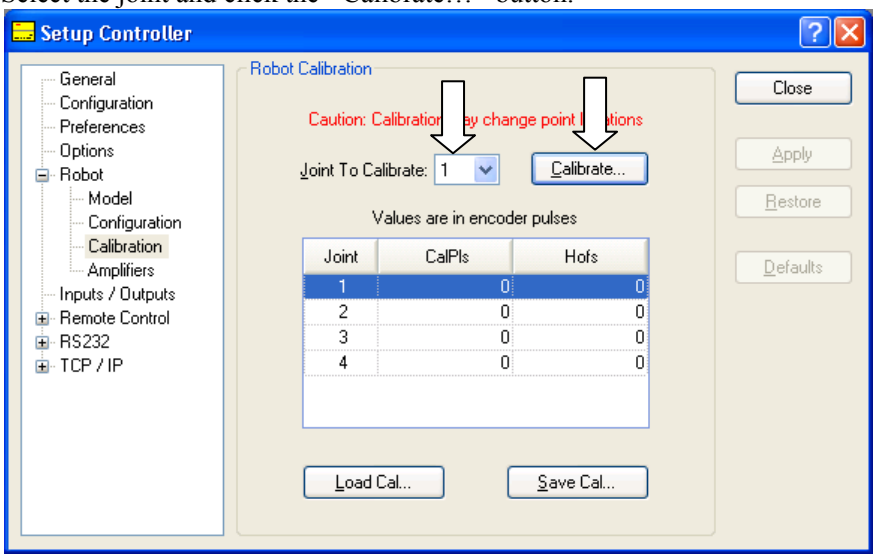

EPSON RC+ 6.0 | EPSON RC+ 7.0

i. Select EPSON RC+ menu-[Setup]-[System Configuration].

ii. Select the [Robot]-[Robot**]-[Calibration].

NOTE

Only selected robot can be calibrated.

iii. Select the joint and click the <Calibrate…> button.

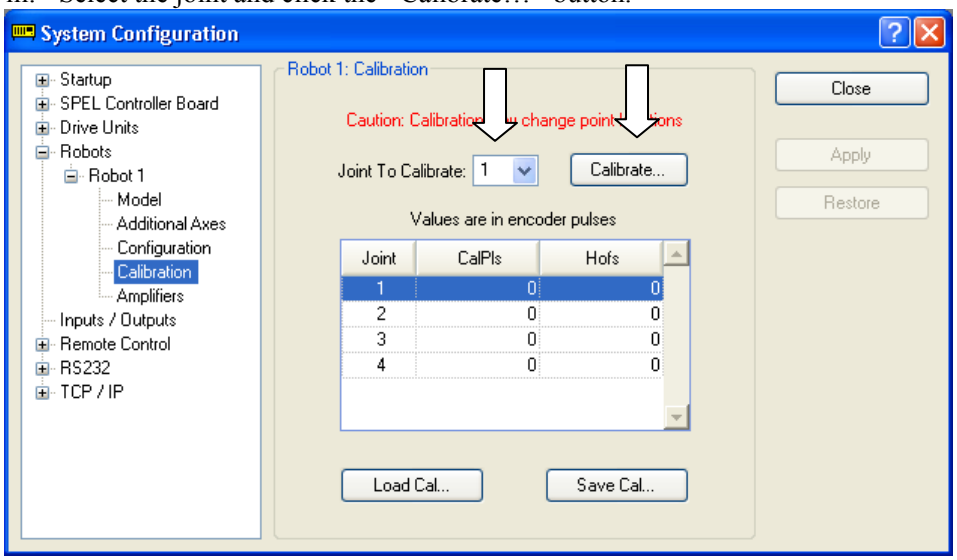

(2) Confirm the warning message and click the <Yes> button.

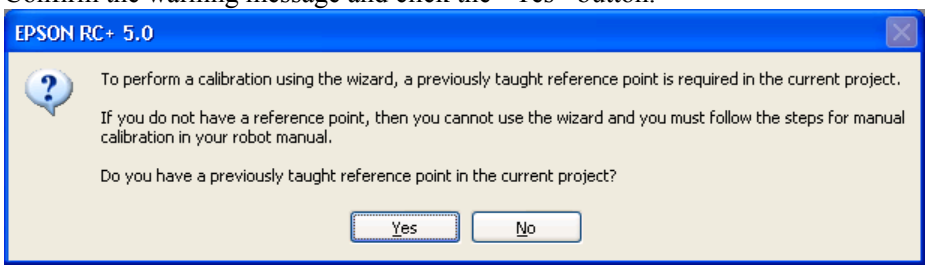

(3) Move the joint to calibrate manually to approximate zero position, as shown in the dialog. After moving the joint click the <Next> button.

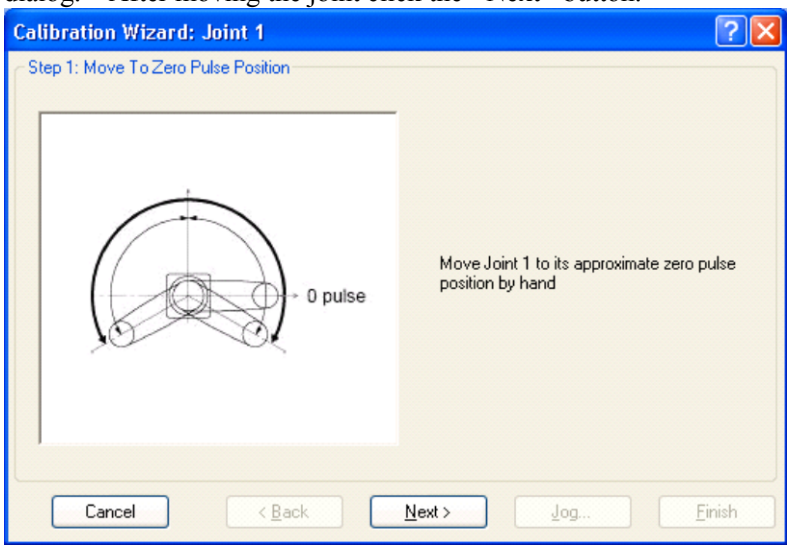

0 pulse position of Joint #1:

position aligned with X-axis in Robot coordinate system

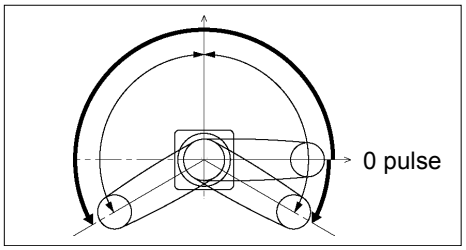

0 pulse position of Joint #2:

position where Arms #1 and #2 are in a straight line (Regardless of the Joint #1 direction.)

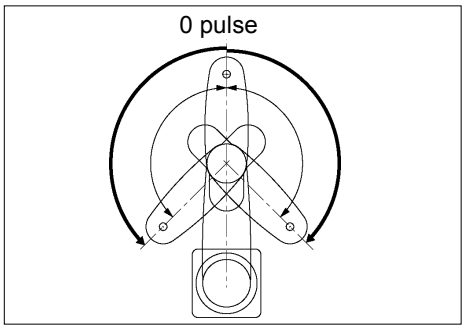

0 pulse position of Joint #3:

upper limit position in motion range

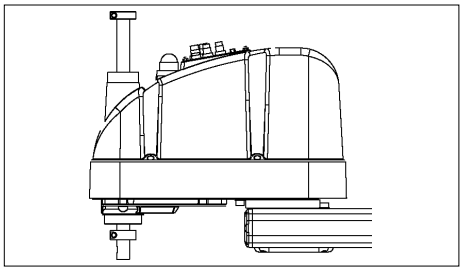

The height of Joint #3 depends on manipulator model.

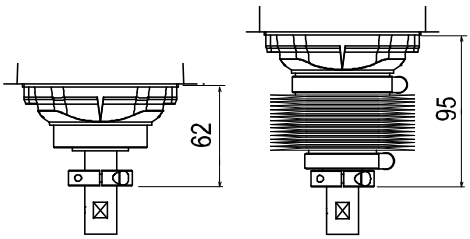

Standard model

Cleanroom model, Protected model with bellows option

0 pulse position of Joint #4:

position where the flat surface (or groove in the up/down mechanical stop) on the shaft faces toward the tip of Arm #2

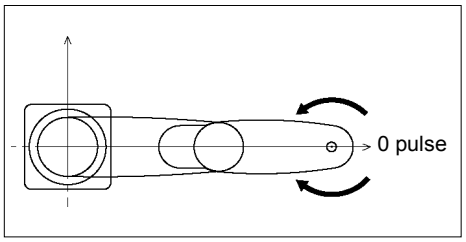

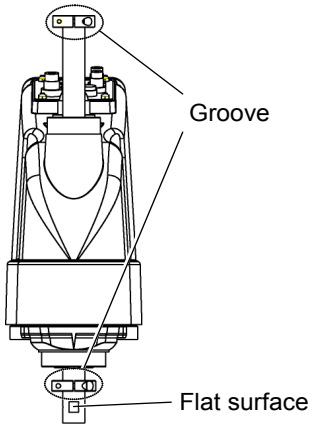

(4) Click the <Yes> button to reset the encoder.

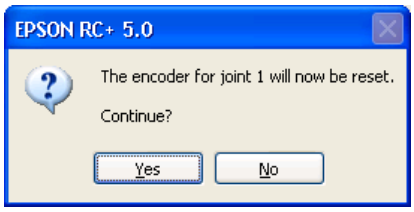

(5) Reboot the Controller.

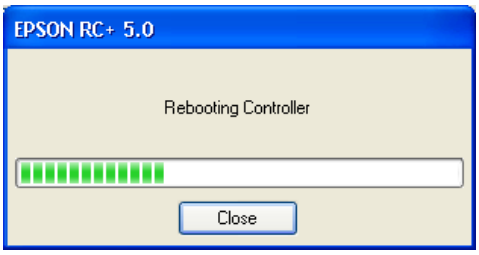

* This window will disappear when the Controller starts up.

(6) Select the reference point to use for calibration, and click the <Next> button.

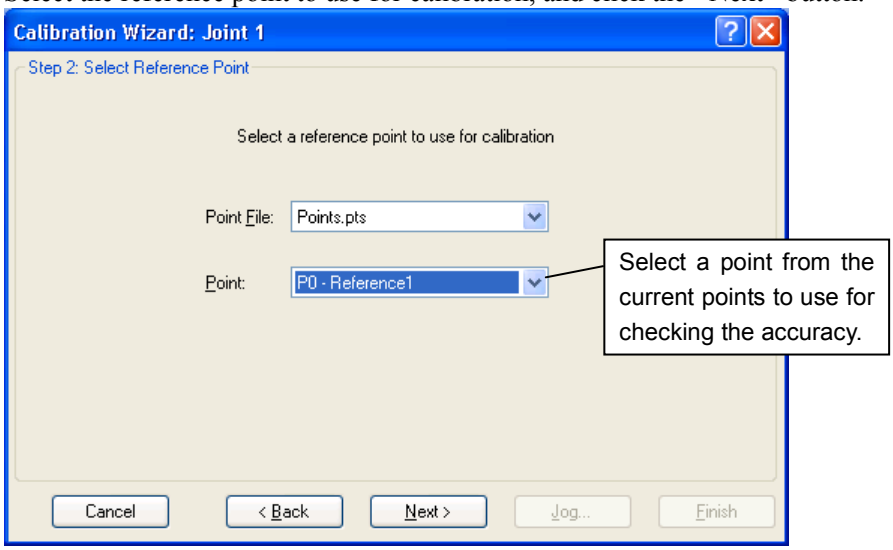

(7) Click the <Jog…> button to display the [Jog & Teach] dialog.

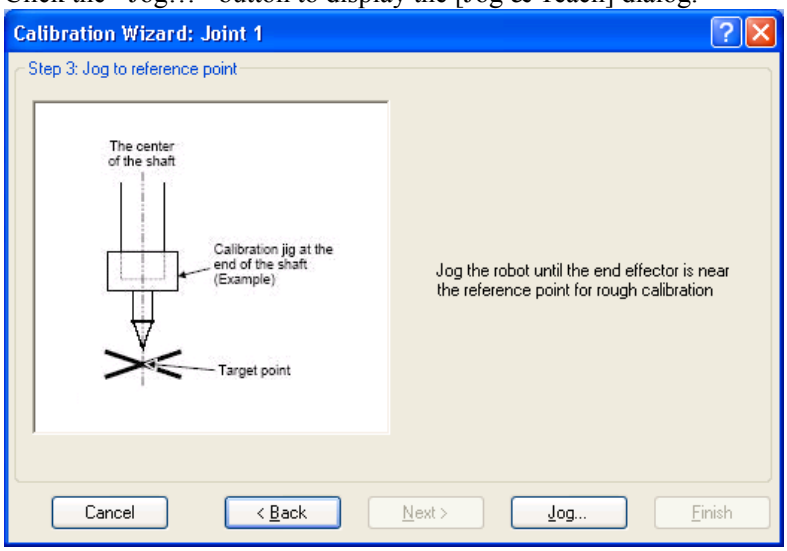

(8) Jog the end effector to approximate reference point in the [Jog & Teach] dialog for rough calibration. Then click the <OK> button.
* Before operating the robot, open the [Jog & Teach] tab and execute <Motor ON>.

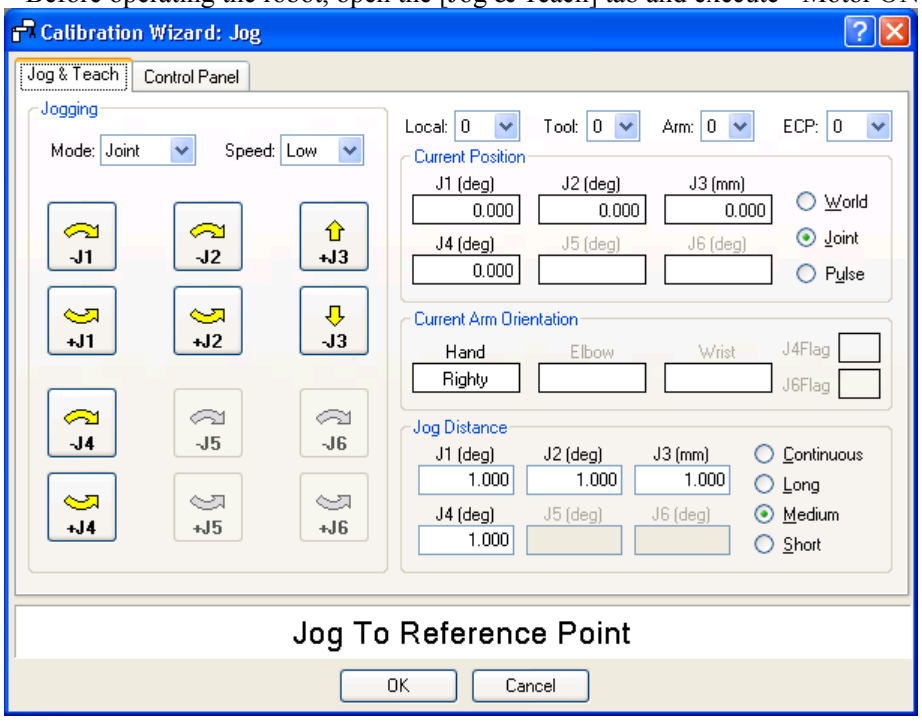

(9) Click the <Next> button.

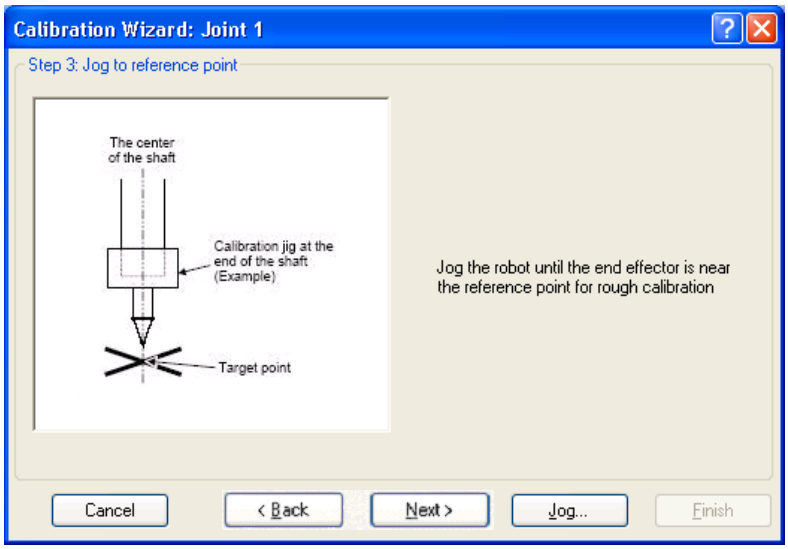

(10) The manipulator moves to the reference point. Click the <Execute> button.

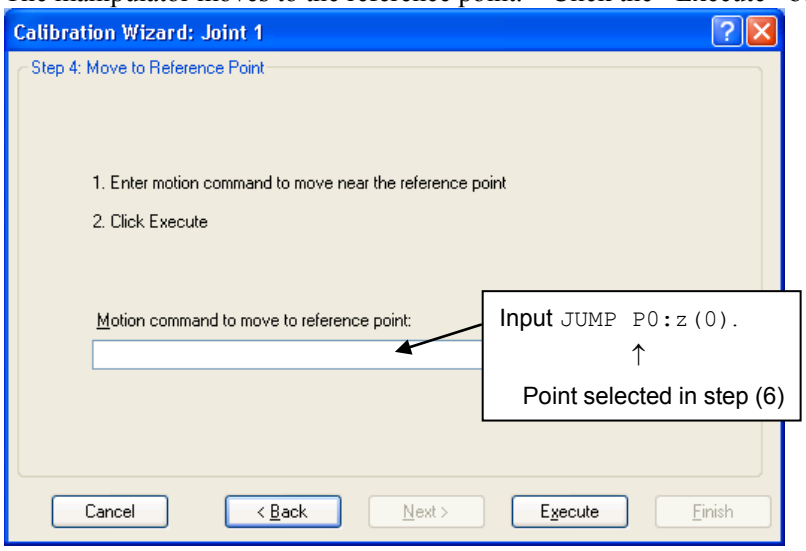

(11) Confirm the message and click the <Yes> button.

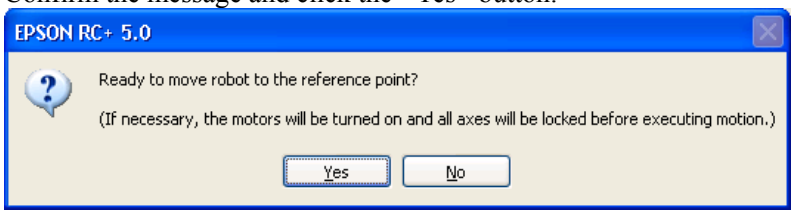

(12) After the manipulator moves to the reference point, click the <Next> button.

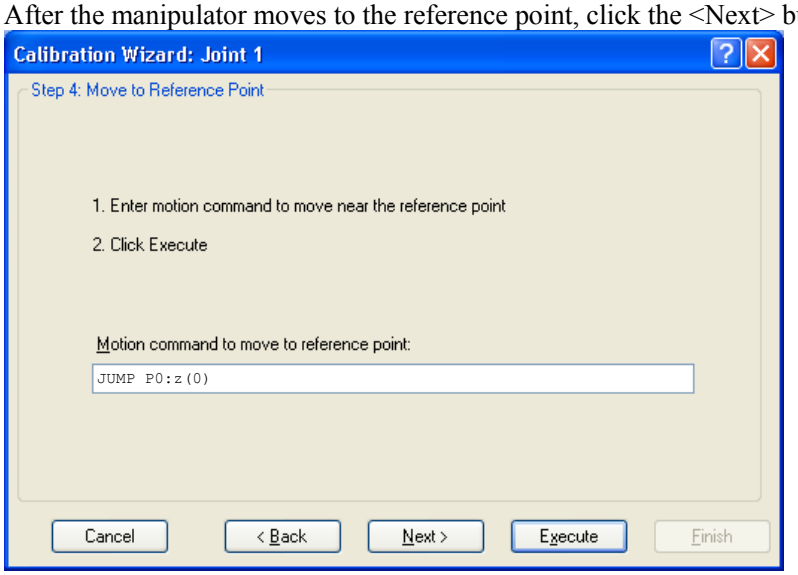

(13) Jog to the accurate reference position. Click the <Jog> button.

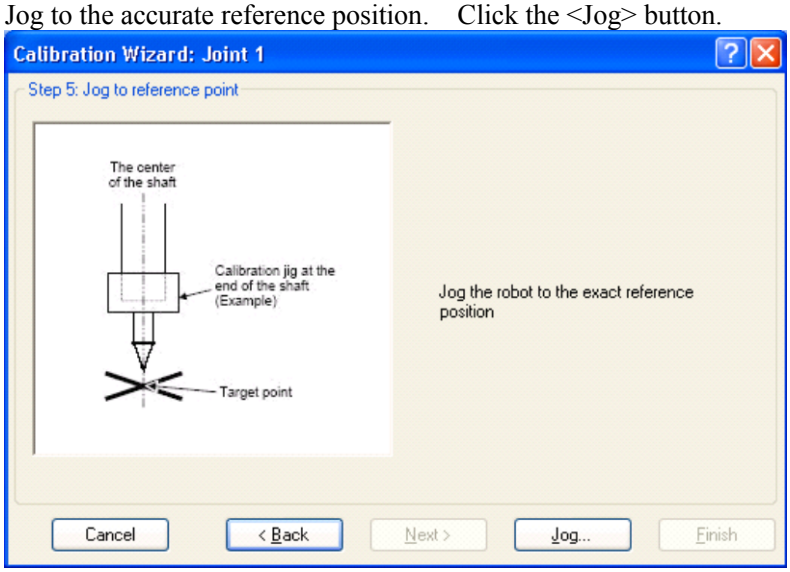

(14) Jog the end effector to approximate reference point in the [Jog & Teach] dialog for rough calibration. Then click the <OK> button.

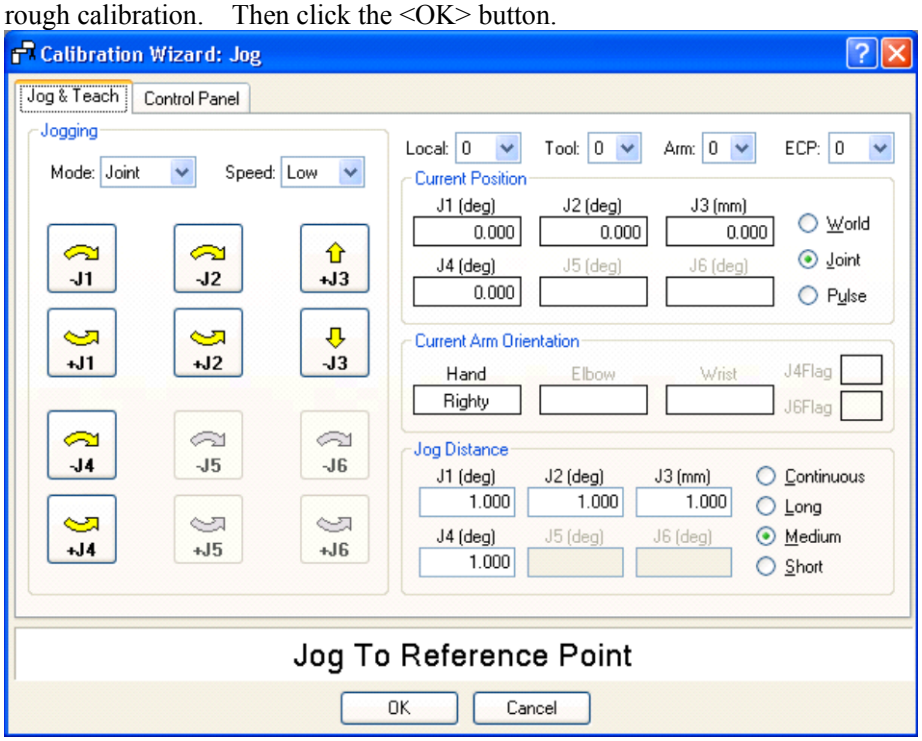

* Position Joint #2 only and move Joint #3 to around 0 pulse.

(15) Click the <Next> button.

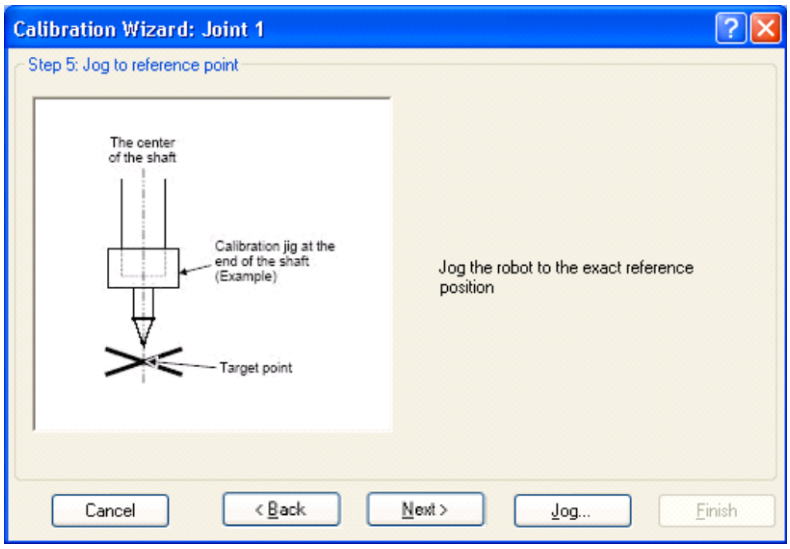

(16) Execute the procedure in "Calibration Using Right / Left Arm Orientations" to accurately calibrate Joint #2 only.

Go on to the step (19) for the other joints calibration.

i. Move to another point that has different pose (from righty to lefty) using Jump command. Click the <Yes> button.

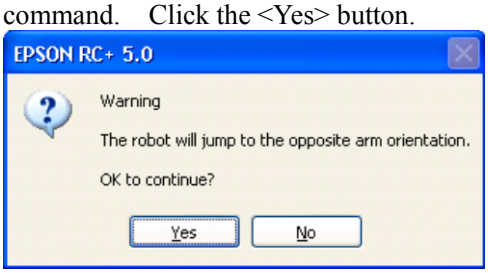

ii. Jog to the accurate reference position. Click the <Jog> button.

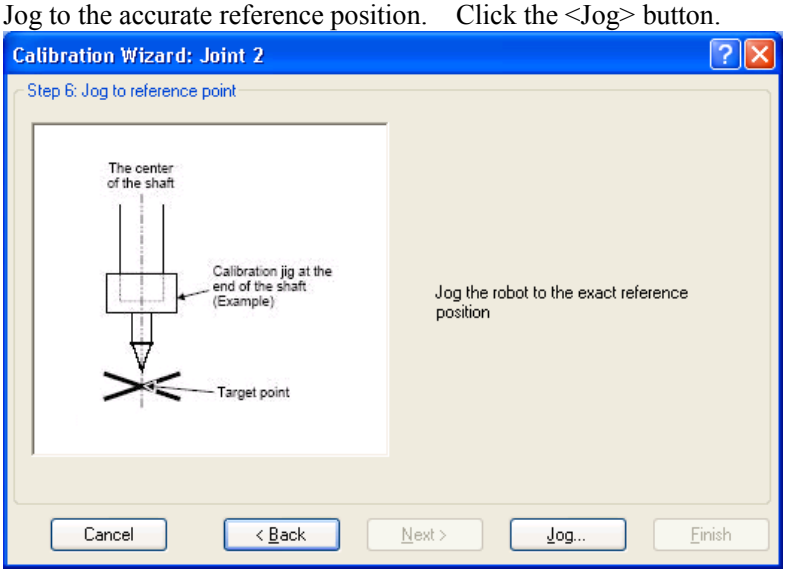

iii. Jog to the accurate reference position and adjust the position.
Click the <OK> button.

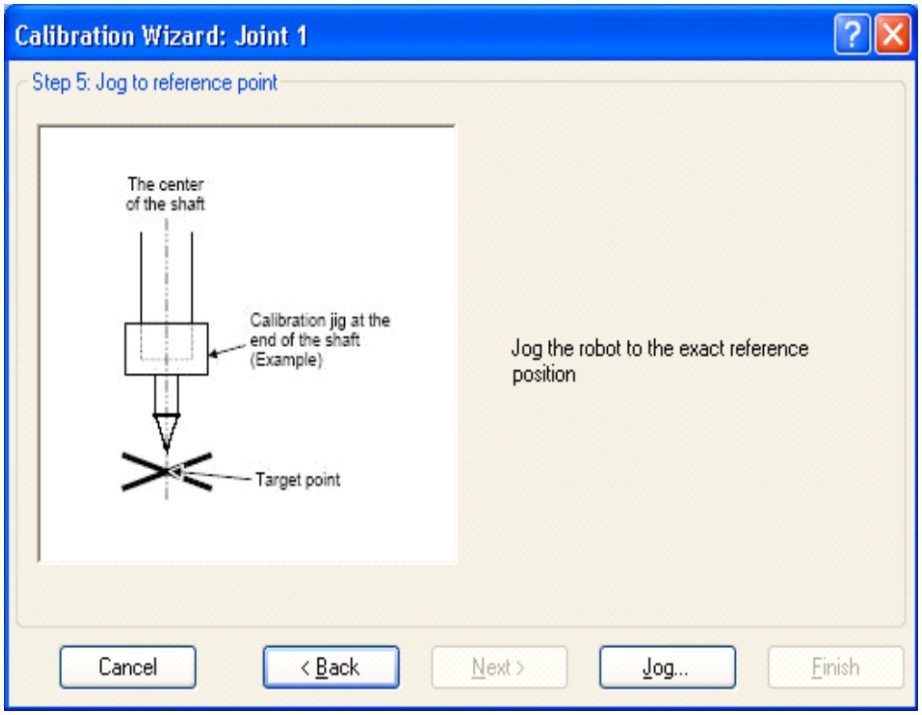

iv. Click the <Next> button.

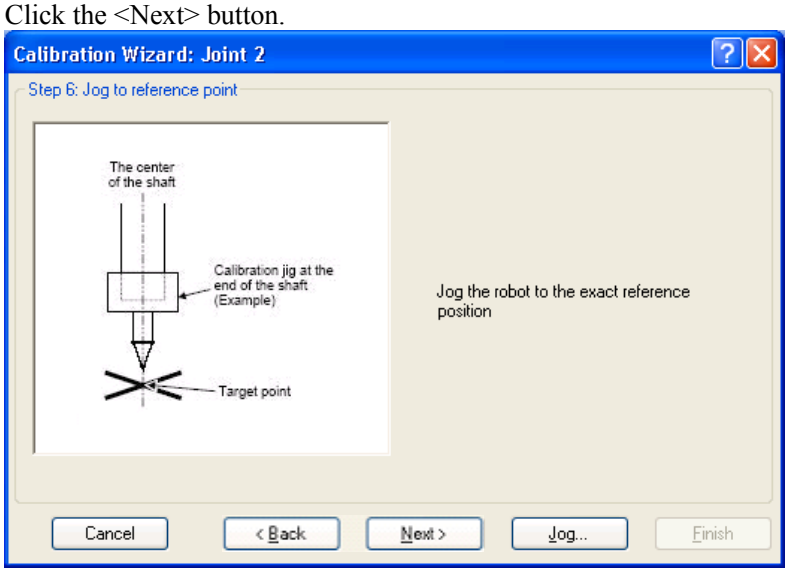

(17) Calibration is complete. Click the <Finish> button.

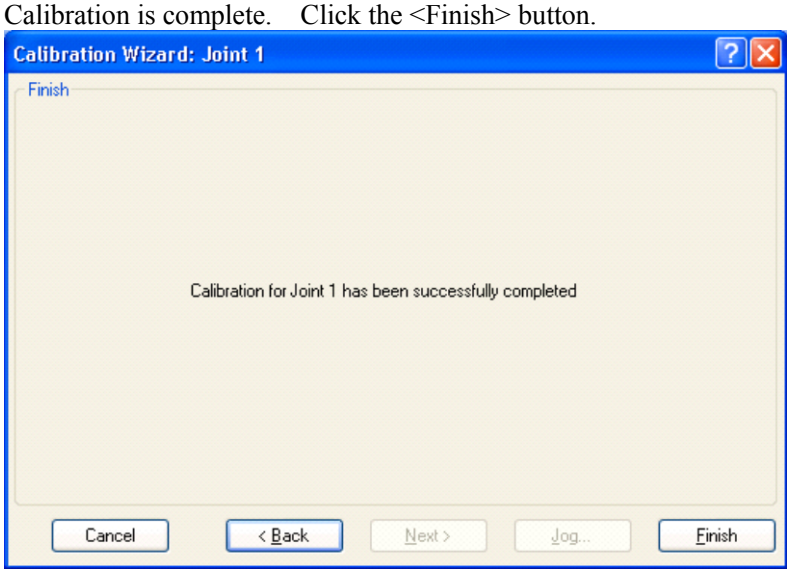

(18) Move the manipulator to other points and check if it can move without problems. Teach points where appropriate.

13.3 Accurate Calibration of Joint #2

When coordinates for the Manipulator working point require calculation, it is important for Joint #2 to be calibrated accurately.

NOTE ☞ If the accuracy of Joint #2 is not obtained through the steps in the section *Maintenance: 13.2 Calibration Procedure*, follow the steps below "Calibration Using Right / Left Arm Orientations" to accurately calibrate Joint #2.

The reference point is the center of the ball screw spline shaft during this calibration.

When there is a misalignment between the center of the end effector and the center of the ball screw spline shaft, remove the end effector and perform the calibration of the shaft.

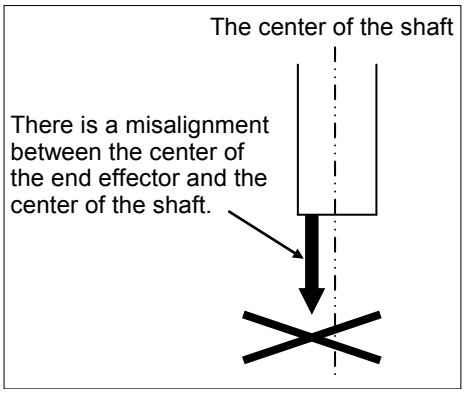

Make a calibration jig as shown in the right figure and attach it on the end of the shaft to make the center of the shaft clear.

Decide a target point and mark a cross (×) on it so that you can easily verify the center of the shaft after switching the arm pose between right and left.

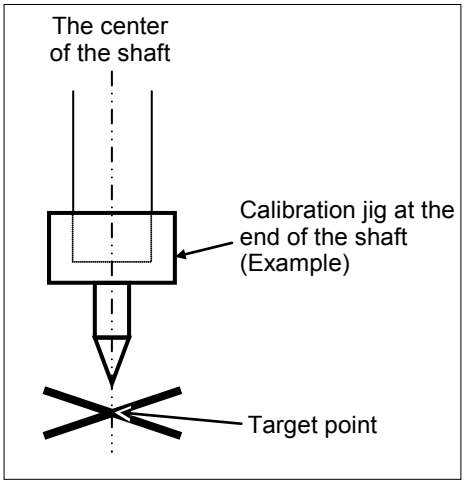

After removing the end effector and performing the calibration, install the end effector and move the Manipulator to the teaching point to verify whether there is a positional gap. If there is a positional gap, fine-tune the installation position of the end effector and teach the point again.

Coordinates for the working point requires calculation in the following cases:

- Teaching the working point by entering the coordinate values (MDI teaching)
- Switching the arm orientation between right and left at a given point
- Using the Pallet command
- Executing CP control (such as liner or circular interpolation)
- Using the Local command
- Pose data specified with relative coordinates <Example: P1+X(100) >
- Vision Guide camera calibrations

Calibration Using Right / Left Arm Orientations

(1) Check the point data for calibration

Use a pose (point) you can easily verify the accuracy within the work envelop of both right and left arm. Then, check the number of pose (point) you want to use.

(2) Open the Tools menu | Robot Manager | Control Panel and click the MOTOR ON.

(3) Click the <Free All> button to free all joints from servo control. Now, you can move arms by hands.

(4) Move the arms to the position of point data for calibration in rightly arm orientation.

(5) From the current position, teach any point data number unused.
This pose (point) is now called P1.

Specify the point number "1" and click the <Teach> button in the [Jog & Teach].

(6) Click the Lock All in the [Control Panel] to lock all joints under servo control.

(7) Switch to the lefty arm orientation. Then, move the arm to the same point.

```
>Jump P1/L:Z(0) '
```
Change the arm orientation from righty to lefty
Z is the maximum position

* If there is interference on the way from right to lefty, click the Free All in the [Control Panel] and change the arm orientation to lefty by hands. Then, go to the step (6), (7).

(8) The joints are slightly out of position.

Adjust the gap with the –Z in the Jogging group in the [Jog & Teach]. Then, teach another point data number unused. This pose (point) is now called P2.

Specify point number "P2" and click the <Teach> button in [Jog & Teach].

(9) Input the new Hofs value.

```
>Hofs Hofs (1), Hofs (2) + (Ppls(P1,2) + Ppls(P2,2)) /
 2, Hofs(3), Hofs(4)
```

(10) From the current lefty arm orientation (the position in the step (8)), teach the point data number used in the step (8). This pose (point) is called P2.

Specify point number "P2" and click the <Teach> button in [Jog & Teach].

(11) Switch to the righty arm orientation. Then, make sure the manipulator move to the correct position.

```
>Jump P2/R      '
```
Change the arm orientation from lefty to righty

* If there is any interference on the way from lefty to righty, click the Free All in the [Control Panel] and change the arm orientation to righty by hands. Then, go to the step (6), (11).

(12) Move the manipulator to other point data and make sure it moves to the correct position. Teach some more points if required.

* Delete the two points taught for the Joint #2 calibration.

13.4 Calibration Procedure without using Calibration Wizard

NOTE ☞ This section indicates the calibration without using the calibration wizard of EPSON RC+. For details of calibration using the calibration wizard, refer to *Maintenance: 13.2 Calibration Procedure*.

When coordinates for the Manipulator working point require calculation, it is important for Joint #2 to be calibrated accurately. Execute the procedure in "Calibration Using Right / Left Arm Orientations" to accurately calibrate Joint #2. For details, refer to *Maintenance: 13.3 Accurate Calibration of Joint #2*.

You cannot calibrate Joint #4 alone because of the structure of the Manipulator. When calibrating Joint #4, you must calibrate Joint #3 and #4 at the same time.

NOTE ☞ The reference point (a point to identify the position of the manipulator) needs to be specified for calibration.

Follow steps 1 to 6 described below in order to calibrate the origin.

1. Basic Pose Confirmation

   (1)-1 After the part replacement, perform the calibration using the point data currently registered.
   Confirm the point data number (P*) to reconstruct the correct manipulator position.

   * Point data before the parts replacement (motor, reduction gear, belt, etc.) is necessary for the calibration.

2. Part Replacement

   (2)-1 Replace parts as dictated by this manual.
   * Be careful not to injure yourself or damage parts during part replacement.

3. Encoder Initialization

   (3)-1 Turn ON the Controller when all joints are in the motion range.

   (3)-2 Manually move the joint that needs origin alignment to its approximate 0 pulse position.

0 pulse position of Joint #1:

position aligned with X-axis in Robot coordinate system

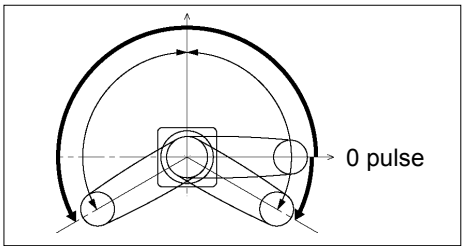

0 pulse position of Joint #2:

position where Arms #1 and #2 are in a straight line (Regardless of the Joint #1 direction.)

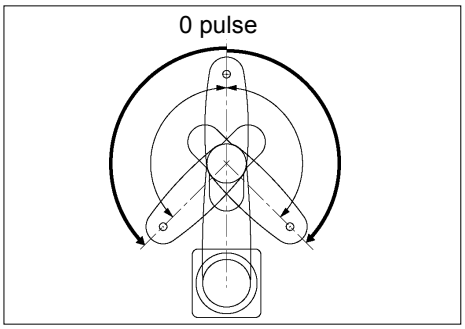

0 pulse position of Joint #3:

upper limit position in motion range

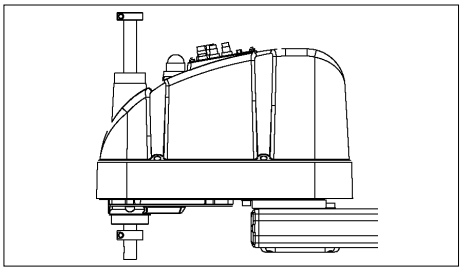

The height of Joint #3 depends on manipulator model.

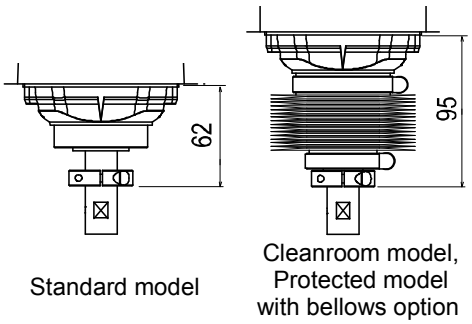

0 pulse position of Joint #4:

position where the flat surface (or groove in the up/down mechanical stop) on the shaft faces toward the tip of Arm #2

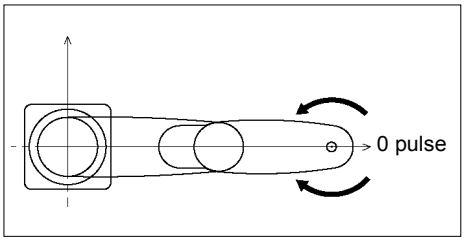

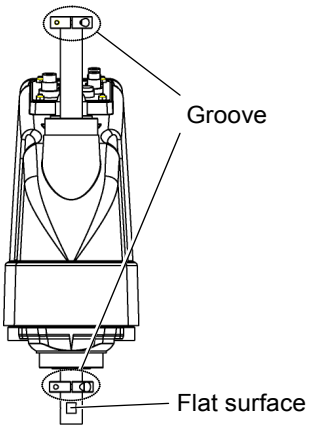

(3)-3 Connect EPSON RC+ to the Controller.

EPSON RC+ 6.0 EPSON RC+ 7.0

Select a robot to be calibrated. Input as below in the [Command Window] and execute it.
(This example uses “robot 1”.)

```
> robot 1
```

(3)-4 Execute the absolute encoder initialization command.

Input one of the following commands to [Command Window] according to the joint being calibrated.

Joint #1: `>EncReset 1`
Joint #2: `>EncReset 2`
Joint #3: `>EncReset 3`
Joint #4: `>EncReset 3, 4`

(3)-5 Reboot the Controller.

Select EPSON RC+ menu-[Tools]-[Controller] and click the <Reset Controller> button.

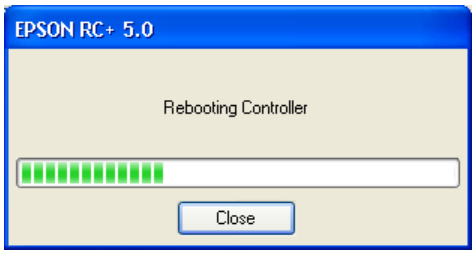

* This window will be disappeared when the Controller starts up.

4. Rough Calibration

(4)-1 Execute the following command from the menu-[Tools]-[Command Window].

```
>calpls 0,0,0,0
```

* Manipulator does not move.

(4)-2 Execute one of the following commands according to the joint you want to calibrate from the menu-[Tools]-[Command Window].

Joint #1 `>calib 1`
Joint #2 `>calib 2`
Joint #3 `>calib 3`
Joint #4 `>calib 3, 4`

5. Calibration (Accurate Positioning)

(5)-1 Turn ON the motors from the EPSON RC+ menu -[Tools] -[Robot Manager]-[Control Panel].

(5)-2 Click the <Free All> button to free all joints from servo control. Now, you can move arms by hands.

(5)-3 Move the Manipulator by hand to a rough position/posture of the calibration point data.

(5)-4 Create the data from the calibration point data.

Enter and execute the following command in [Command Window].
(In this example, P1 is used as the calibration point data.)

```
> Calpls Ppls(P1,1), Ppls(P1,2), Ppls(P1,3), Ppls(P1,4)
```

(5)-5 Move the joint to the specified point using a motion command.

For example, when the specified point data is “P1”,
execute “Jump P1:Z(0)” from [Jog & Teach].

* The joint NOT being calibrated moves to the original position.

(5)-6 Accurately align the joint* being calibrated to the specified point using jog commands.

* You must move Joint #3 and #4 to the position when calibrating Joint #4.

Select the jog mode [Joint] from [Jog & Teach] to execute the jog motion.

(5)-7 Execute the calibration.

Enter and execute one of the following commands in [Command Window] according to the joint being calibrated.

Joint #1: `>Calib 1`
Joint #2: `>Calib 2`
Joint #3: `>Calib 3`
Joint #4: `>Calib 3, 4`

6. Accuracy Testing

(6)-1 Move the Manipulator to another point to confirm that it moves to the same position.
If it does not move to the same position, re-calibrate using another point. You must set the point again if reproducibility cannot be assured through calibration.

14. Maintenance Parts List

14.1 Common Parts

Part Name		Code	Note	Reference: Maintenance	Overhaul *4
AC Servo Motor	Joint #1, 2	R13B000607	400 W	5.1, 6.1	✓
		R13B000616	400 W (For S/N: 1**** or later)		
	Joint #3	R13B000608	200 W	7.1	✓
		R13B000614	200 W (For S/N: 1**** or later)		
	Joint #4	R13B000609	100 W	8.1	✓
		R13B000617	100 W (For S/N: 1**** or later)		
Reduction Gear Unit **	Joint #1	R13B010011		5.2	✓
	Joint #2	R13B010012		6.2	✓
Solenoid Brake	Z axis	R13B030501		7.3	✓
	U axis	R13B030502	For G6-**3** (Z: 300, 330 mm) *1	8.3	✓
Timing Belt	Joint #3	R13B030206	Z : width 10 mm	7.2	✓
	Joint #4	R13B030207	U1 : width 9 mm	8.2	✓
		R13B030208	U2 : width 20 mm		
Battery Board		R13B041202	With lithium battery Installed in Arm #2 ER17330V (TOSHIBA)	11.2	
Battery Unit		R13ZA00600300	Lithium battery for replacement *3 ER17330V (TOSHIBA)	11.1	
O-ring		R13B031223	For Motor flange of Joint #1	5.1	
LED Lamp		R13A030000200	*2	12	
Grease *5	AFB (Ball Screw Spline)	-	For purchasing the grease, please contact the sales company in your region.	2.3	
	SK-1A (Reduction Gear Unit)	-		2.3	
	GPL-224 (Cable)	-		4	

*1 G6-**1** (Z: 150, 180 mm) do not have U axis Solenoid Brake.

*2 Common with E2 series

*3 Common with E2C

*4 As a rough indication, perform the overhaul (parts replacement) before reaching 20,000 operation hours of the Manipulator. The operation hours can be checked in [Controller Status Viewer] dialog - [Motor On Hours]. For details, refer to *Maintenance 2.2 Overhaul (Parts Replacement)*.

*2 Regarding purchase of grease

Due to the chemicals regulations of individual countries (the UN GHS), we are requesting our customers to purchase the grease required for maintenance from the manufacturers listed in the table below as of April 2015. Regarding purchase of the grease, please contact the following manufacturers. If there is anything unclear, please contact our suppliers.

Product name	Manufacturer	URL
THK AFB-LF Grease	THK CO., LTD.	http://www.thk.com/
Harmonic Grease SK-1A	Harmonic Drive Systems Inc.	http://www.harmonicdrive.net/
Krytox®GPL-224	DuPont	http://www2.dupont.com/Our_Company/en_US/worldwide/us_country.html

** Reduction Gear Unit

A reduction gear unit consists of the following three parts. When replacing the reduction gear unit, be sure to always replace the waveform generator, flexspline, and circular spline all together as one set.

Waveform generator

This waveform generator consists of an ellipsoidal cam with ball bearings on its outer circumference.
The inner ring of bearings is secured to the cam, while the outer ring is capable of flexible deformation through the ball bearings.

Flexspline

A thin, elastic, cup-shaped metal body with gear teeth around the outer circumference of the opening.

Circular spline

A rigid, ring-shaped body with gear teeth on the inner circumference.
The circular spline has two more teeth than the flexspline does.

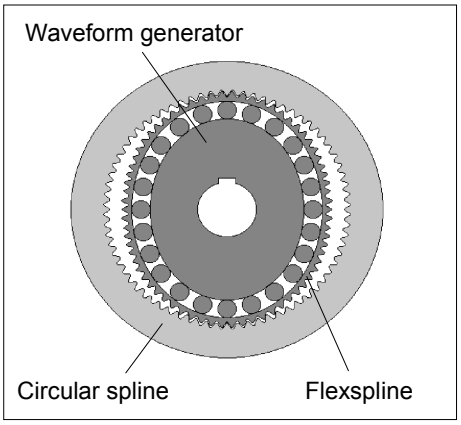

The splines are greased. Be sure to keep the grease from being attaching to the clothes.

14.2 Parts by Environment Model

(S: Standard-model C: Cleanroom-model D, P: Protected-model)

Part Name				Code	Note	Reference: Maintenance	Overhaul *5
Ball Screw Spline	S, D (without bellows)		180 mm	R13B010202		10.1.1	✓
			330 mm	R13B010203			
	C		150 mm	R13B010204		10.1.2	✓
			300 mm	R13B010205			
	P, D with bellows option		150 mm	R13B010206			
			300 mm	R13B010207			
Cable Unit	S, C		450 mm	R13B020012	Inner wiring cable	4	
			550 mm	R13B020013			
			650 mm	R13B020014			
	P, D		450 mm	R13B020015			
			550 mm	R13B020016			
			650 mm	R13B020017			
M/C Cable	S, C	3 m	For RC180, RC620	R12B020425	*4	4.3	
			For RC700-A, Straight	R12NZ900JX			
			For RC700-A, L-shaped	R12NZ900K1			
		5 m	For RC180, RC620	R12B020426			
			For RC700-A, Straight	R12NZ900JY			
			For RC700-A, L-shaped	R12NZ900K2			
		10 m	For RC180, RC620	R12B020427			
			For RC700-A, Straight	R12NZ900JZ			
			For RC700-A, L-shaped	R12NZ900K3			
	D, P	3 m	For RC180, RC620	R12B020428			
			For RC700-A, Straight	R12NZ900K4			
			For RC700-A, L-shaped	R12NZ900K7			
		5 m	For RC180, RC620	R12B020429			
			For RC700-A, Straight	R12NZ900K5			
			For RC700-A, L-shaped	R12NZ900K8			
		10 m	For RC180, RC620	R12B020430			
			For RC700-A, Straight	R12NZ900K6			
			For RC700-A, L-shaped	R12NZ900K9			
Arm Cover	S, D			R13B030402	White	3.1, 3.2	
	C, P			R13B030406	Plating		

Part Name			Code	Note	Reference: Maintenance	Overhaul *5
Bellows	C, P, D with bellows option	150 mm	R13B030701	*4 *6	9	
		300 mm	R13B030702	*6		
Gasket Unit	D, P		R13B031226		2.6	
Arm #2 Gasket	P		R13B031227		-	
Brake Release Switch	S, C		R13Z702640100	*2	-	
	D, P		R13B060902	*4	-	

*1 G6-**1** (Z: 150, 180 mm) do not have U axis Solenoid Brake.
*2 Common with E2 series
*3 Common with E2C
*4 Common with G10/G20 series
*5 As a rough indication, perform the overhaul (parts replacement) before reaching 20,000 operation hours of the Manipulator. The operation hours can be checked in [Controller Status Viewer] dialog - [Motor On Hours]. For details, refer to *Maintenance 2.2 Overhaul (Parts Replacement)*.
*6 The bellows are provided in a unit of two pieces. The shape varies between the upper and lower bellows.