User Manual **English**

APC Smart-UPS® RT – UXI/UXICH

7500/10000 VA 220/230/240 Vac

Tower/Rack-Mount 6U

Uninterruptible Power Supply

990-1790A 03/2004

Introduction

The APC Smart-UPS® RT is a high-performance, uninterruptible power system (UPS), designed to prevent blackouts, brownouts, sags and surges from reaching your computers, servers, and other sensitive electronic equipment.

1: INSTALLATION

Read the Safety Instruction sheet before installing the UPS.
The User Manuals and the Safety Guide are accessible on the supplied User Manuals CD and on the APC web site, www.apc.com.

Unpack

Inspect the UPS upon receipt. Notify the carrier and dealer if there is damage.

The packaging is recyclable; save it for reuse or dispose of it properly.

Check the package contents:

- the UPS
- the front bezel
- a literature kit containing:
  - software CD
  - Smart-UPS User Manuals CD
  - serial cable
  - six output power cords
  - two battery cable assemblies
  - two ground wires
  - product documentation, warranty information, and safety information
  - Web/SNMP management card user manual

Placement of the UPS

Place the UPS where it will be used.

The UPS is heavy. Select a location sturdy enough to handle the weight.
Do not operate the UPS where there is excessive dust or the temperature and humidity are outside the specified limits. Refer to the APC web site, www.apc.com for details.

Ensure the air vents on the front and rear of the UPS are not blocked.

PLACEMENT

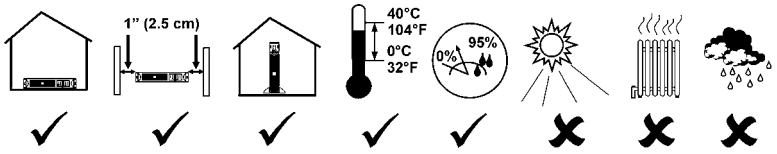

ATTACH THE BEZEL TO THE UPS

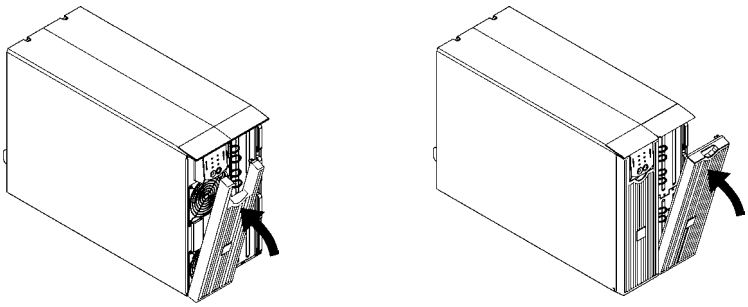

HARDWIRING INSTRUCTIONS

- Wiring must be performed by a qualified electrician.
- Adhere to all national and local electrical codes.
- Install a utility circuit breaker for input wiring, (see tables below).

220/230/240 V MODELS	
Input Connections	**Output Connection (optional)**
Single-Phase: Wire to L1, N, and ⏚. Three-Phase: Wire to L1, L2, L3, N, and ⏚.	Wire to L1A, N1, and ⏚.

System	**Wiring**	**Number of Phases**	**Voltage**	**Current Full Load (Nominal)**	**External Input Circuit Breaker (Typical)**	**Wire Size (Typical)**
SURT7500	Input	1	220/230/240 V	38 amps	50 amps / 2-pole	10mm^2
	Input	3+ Neutral	380/400/415 V	14 amps / phase when online, 38 amps on L1 in bypass	50 amps / 4-pole	10mm^2
	Output	1	220/230/240 V	38 amps	(not required)	10mm^2
SURT10000	Input	1	220/230/240 V	50 amps	63 amps / 2-pole	16mm^2
	Input	3+ Neutral	380/400/415 V	18 amps / phase when online, 50 amps on L1 in bypass	63 amps / 4-pole	16mm^2
	Output	1	220/230/240 V	50 amps	(not required)	16mm^2

1. Switch the UPS input circuit breaker (see **A** in diagram) and utility circuit breakers OFF.
2. Remove the input access panel, (see **B** in diagram).
3. Remove circular knockout.
4. Run appropriate size wire through the access panel, and connect to the terminal block, (Green: Ground, Brown: Hot, Blue: Neutral). **Connect the ground wire first.** Use appropriate strain reliefs, (not included).
5. For three-phase input, set the input phase selector switch, (see **C** in diagram) to "3". For single-phase input, leave the switch in the default position of "1".
6. Replace the access panel.

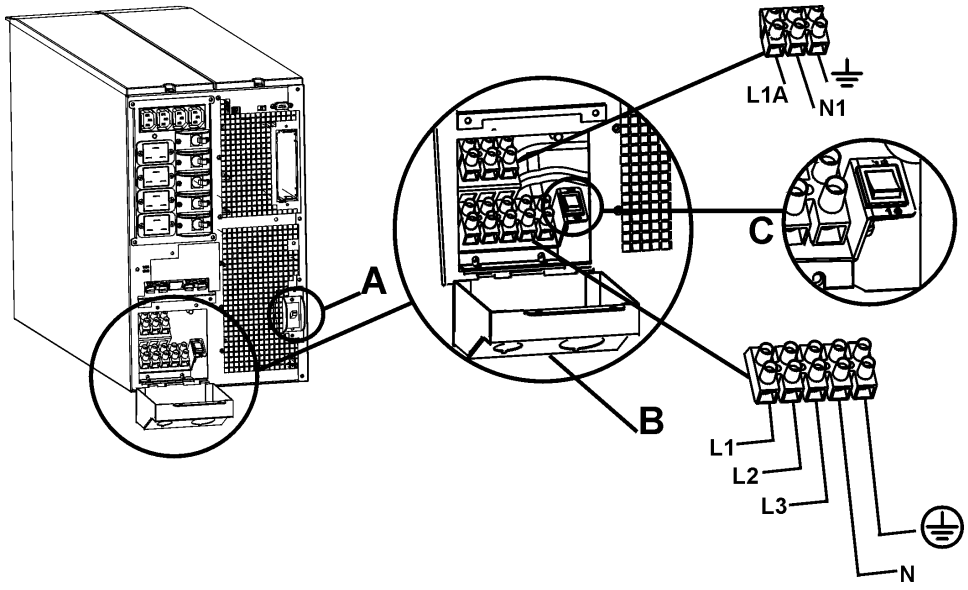

CIRCUIT BREAKERS

7500/10000 VA  input circuit breaker	The input circuit breaker must be switched on for the UPS to operate. The input circuit breaker protects the UPS from extreme overload conditions.
7500/10000 VA 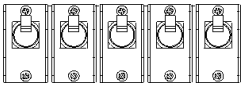 output circuit breakers	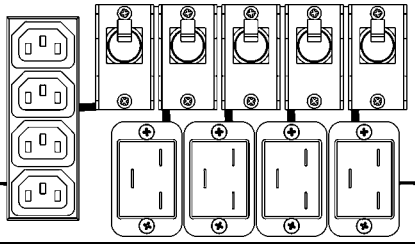

BASIC CONNECTORS

 **Serial Com**	Power management software and interface kits can be used with the UPS. **Use only interface kits supplied or approved by APC.** **Any other serial interface cable will be incompatible with the UPS connector.**
 **Ethernet Port**	Connect the UPS to the network using the Web/SNMP management card.
 **EPO Terminal**	Emergency Power Off terminal allows the user to connect the UPS to the central EPO system.
 **TVSS Screw**	The UPS features a transient voltage surge-suppression (TVSS) screw for connecting the ground lead on surge suppression devices such as telephone and network line protectors. When connecting grounding cable, disconnect the unit from the utility power outlet.
 **External Battery Pack Connectors**	External battery packs must be connected to these connectors located on the rear panel of the unit.

CONNECT THE EXTERNAL BATTERIES

Battery Safety

Read and adhere to the following warnings when installing or servicing the external batteries. Failure to observe these warnings may result in serious injury, death or damage to the equipment.

WARNINGS 	• Do not attempt to install or service external batteries alone. **A qualified electrician should perform the installation and servicing of external batteries.** • Disconnect charging source(s) **BEFORE** connecting or disconnecting battery terminals. • External batteries may retain lethal voltages after power has been disconnected and all switches are off. • Use extreme caution when making terminal connections. Do not allow cables to touch anything except the intended terminal.
PRACTICES	Always wear: Goggles or face shields Acid-resistant, insulated gloves Protective aprons Protective overshoes or rubber boots Always Use: Insulated tools Rubber mats to cover batteries during servicing Rubber mats or rubber stands on the floor Adequate lifting devices Remove: Watches, rings, and other metal objects from your body
PRECAUTIONS	• To avoid static build-up, service personnel should establish a grounding contact prior working on batteries. • Do not lay tools or metal parts on top of batteries. • Lead-acid batteries contain hazardous, toxic materials. ▪ Do not open, alter or mutilate batteries. Internal materials may be harmful to the skin and eyes. ▪ Do not dispose of batteries in a fire. There is danger of explosion. • Handle, transport and recycle batteries in accordance with local codes and regulations.

APC BATTERY SOLUTION

See the APC web site www.apc.com, or contact your APC dealer for information regarding the APC external battery pack.

THIRD PARTY BATTERY SOLUTION

Batteries must be Sealed Lead-Acid type. Use 50 A, 250 VDC fuses with an Interrupt rating of ≥ 20,000 A.

Ensure that the external batteries are wired prior to connecting the batteries to the UPS.

Two separate, isolated 192 V battery systems are required when using a third party battery solution. One cable assembly must be wired to each 192 V battery system. Two cable assemblies are included with the UPS, one for each 192 V battery system.

Connect the Ground and Wire the Battery System

1. Connect the ground wires (included), to each battery enclosure ground and the TVSS screw on the back of the UPS.
2. Cut off one of the connectors on each cable assembly revealing the positive and negative wires in each cable.



3. Connect the positive (red), and negative (black) wires to the positive and negative terminals on each external battery system. Ensure that the proper polarities are connected.
4. Plug the cable connectors into the battery connector receptacles on the back of the UPS.

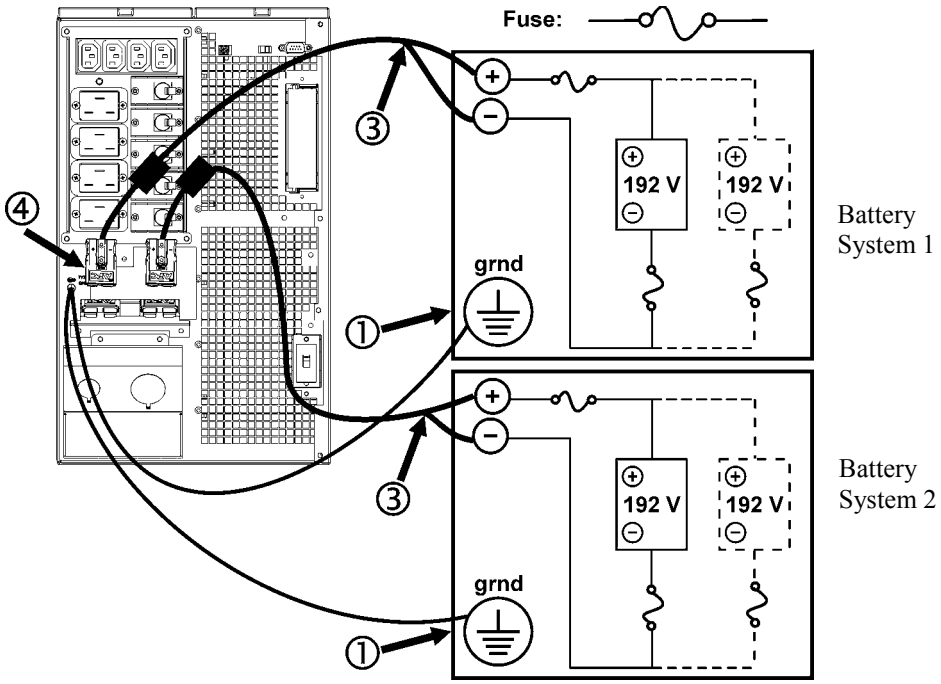

CONNECT EQUIPMENT AND POWER TO THE UPS

1. Connect equipment to the UPS.
2. Turn on all connected equipment. To use the UPS as a master ON/OFF switch, ensure all connected equipment is switched ON. The equipment will not be powered until the UPS is turned on.
3. Switch the utility circuit breaker on.
4. To power up the UPS press the 

button on the front panel.
   - The UPS battery charges when it is connected to utility power.
   - Allow at least 24 hours for the batteries to fully charge prior to connecting equipment to the UPS.
5. Configure the Web/SNMP management card. Refer to the Web/SNMP management card user manual.

TERMINAL MODE TO CONFIGURE UPS PARAMETERS AND PROGRAM THE NUMBER OF BATTERY PACKS

Terminal Mode is a menu driven interface that enables enhanced configuration of the UPS.

Connect the serial cable from the computer to the serial com connector on the back of the UPS.

Instructions for use with PowerChute® *Network Shutdown* software:

1. Open a terminal program. Example: HyperTerminal
   - From the Desktop, go to **Start** => **Programs** => **Accessories** => **Communication** =>**HyperTerminal.**
2. Double-click on the **HyperTerminal** icon.
   - Follow the prompts to choose a name and select an icon. Disregard the message, "...must install a modem," if it is displayed. Click OK.
   - Select the **COM** port that is connected to your UPS. The port settings are:
     - ✓ ***bits per second - 2400***
     - ✓ ***data - bits 8***
     - ✓ ***parity - none***
     - ✓ ***stop bit - 1***
     - ✓ ***flow control - none***
   - Press Enter
3. Example for setting the number of external battery packs:
   Once the blank terminal window is open, follow these steps to enter the number of battery packs:
   - Press Enter to initiate terminal mode. Press Enter multiple times, until the prompt **User Name:** is displayed. Follow the prompts. Type slowly, waiting until each character appears on the screen prior to typing the next character.

     Web/SNMP management card defaults:
     - User Name: apc
     - Password: apc
   - Press 1 and Enter to select Device Manager.
     - Select the model by entering the corresponding number, then press Enter.
   - Press 3 and Enter to select Configuration.
   - Press 1 and Enter to select Battery.
   - Press 2 and Enter to change the Battery Settings.
     - Type in the number of external battery packs.
       Number of packs: 1= 1920 VAh, 2 = 3840 VAh, 3 = 5760 VAh, etc.
   - Press 3 and Enter to accept the changes.
   - Press ESC multiple times (5) to return to the main menu.
   - Press 4 and Enter to log out.

2: OPERATION

SMART-UPS RT FRONT DISPLAY

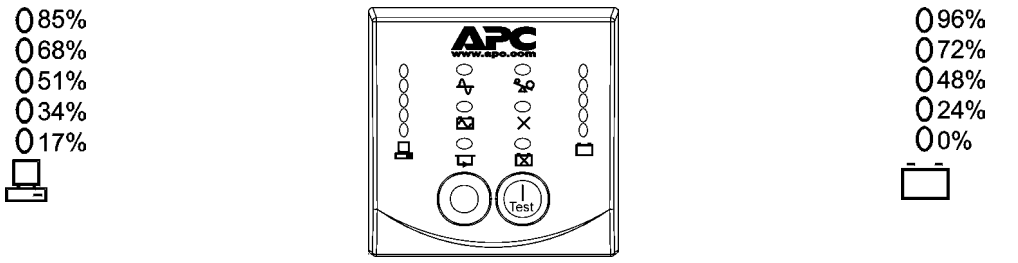

Indicator	*Description*
Online	The Online LED illuminates when the UPS is drawing utility power and performing double conversion to supply power to connected equipment.
On Battery	The UPS is supplying battery power to the connected equipment.
Bypass	The Bypass LED illuminates indicating that the UPS is in bypass mode. Utility power is sent directly to connected equipment during bypass mode operation. Bypass mode operation is the result of an internal UPS fault, an overload condition or a user initiated command either through an accessory or the manual bypass switch. Battery operation is not available while the UPS is in bypass mode. Refer to *Troubleshooting* in this manual.
Fault	The UPS detects an internal fault. Refer to *Troubleshooting* in this manual.
Overload	An overload condition exists. Refer to *Troubleshooting* in this manual.
Replace Battery	The battery is disconnected or must be replaced. Refer to *Troubleshooting* in this manual.

Feature	*Function*
Power On	Press this button to turn on the UPS. (See below for additional capabilities.)
Power Off	Press this button to turn off the UPS.

Feature	*Function*
Normal/Bypass 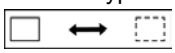	Manual bypass enables the user to manually put connected equipment into bypass mode. While in bypass mode the utility power bypasses the UPS and goes directly to the connected equipment. Battery operation is not available while the UPS is in bypass mode. Refer to *Troubleshooting* in this manual.
Cold Start 	This is not a normal condition. When there is no utility power and the UPS is off, press and hold the  button to power up the UPS and connected equipment. The UPS will emit two beeps. During the second beep, release the button.
Self-Test	**Automatic:** The UPS performs a self-test automatically when turned on, and every two weeks thereafter, (by default). During the self-test, the UPS briefly operates the connected equipment on battery. **Manual:** Press and hold the  button for a few seconds to initiate the self-test.

Diagnostic Utility Voltage **220V 230V 240V** 256 266 276 238 248 258 219 229 239 200 210 220 181 192 202 	The UPS has a diagnostic feature that displays the utility voltage. Plug the UPS into the normal utility power. **The UPS starts a self-test as part of this procedure. The self-test does not affect the voltage display.** Press and hold the  button to view the utility voltage bar graph display. After a few seconds the five-LED, *Battery Charge*  display on the right of the front panel shows the utility input voltage. Refer to the figure at left for the voltage reading (values are not listed on the UPS). The display indicates the voltage is between the displayed value on the list and the next higher value.

BATTERY OPERATION

The UPS switches to battery operation automatically if the utility power fails. While running on battery, an alarm beeps four times every 30 seconds.

Press the  button to silence this alarm. If the utility power does not return, the UPS continues to supply power to the connected equipment until the battery is fully discharged.

When two minutes of run time remain the UPS emits a continuous beeping. If PowerChute software or the Web/SNMP management card are not being used, files must be manually saved and the computer must be turned off before the UPS fully discharges the battery.

The UPS battery life differs based on usage and environment. Refer to www.apc.com for on battery runtimes.

3: USER CONFIGURABLE ITEMS

NOTE: SETTINGS ARE MADE THROUGH SUPPLIED POWERCHUTE SOFTWARE, SMART SLOT ACCESSORY CARDS, OR TERMINAL MODE.			
FUNCTION	***FACTORY DEFAULT***	***USER SELECTABLE CHOICES***	***DESCRIPTION***
Automatic Self-Test	Every 14 days (336 hours)	Every 7 days(168 hours), 14 days (336 hours) On Startup Only, No Self-Test	Set the interval at which the UPS will execute a self-test.
UPS ID	UPS_IDEN	Up to eight characters to define the UPS	Uniquely identify the UPS, (i.e. server name or location) for network management purposes.
Date of Last Battery Replacement	Manufacture Date	Date of Battery Replacement mm/dd/yy	Reset this date when you replace the battery module.
Minimum Capacity Before Return from Shutdown	0 percent	0, 15, 25, 35, 50, 60, 75, 90 percent	Following a low-battery shutdown, the batteries will be charged to the specified percentage before powering connected equipment.
Alarm Delay After Line Failure	5 second delay	5 or 30 second delay At Low Battery Never	Mute ongoing alarms or disable all alarms permanently.
Shutdown Delay	20 seconds	0, 20, 60, 120, 240, 480, 720, 960 seconds	Set the interval between the time when the UPS receives a shutdown command and the actual shutdown.
Duration of Low Battery Warning.	2 minutes PowerChute software provides automatic, unattended shutdown when approximately 2 minutes of battery operated runtime remains.	2, 5, 7, 10, 12, 15, 18, 20 minutes	The low battery warning beeps are continuous when two minutes of run time remain. Change the warning interval default to a higher setting if the operating system requires a longer interval for shutdown.
Synchronized Turn-on Delay	0 seconds	0, 20, 60, 120, 240, 480, 720, 960 seconds	The UPS will wait the specified time after the return of utility power before turn-on (to avoid branch circuit overload).

NOTE: SETTINGS ARE MADE THROUGH SUPPLIED POWERCHUTE SOFTWARE, SMART SLOT ACCESSORY CARDS, OR TERMINAL MODE.			
FUNCTION	***FACTORY DEFAULT***	***USER SELECTABLE CHOICES***	***DESCRIPTION***
High Bypass Point	+10% of output voltage setting	+5%, +10%, +15%, +20%	Maximum voltage that the UPS will pass to connected equipment during internal bypass operation.
Low Bypass Point	-30% of output voltage setting	-15%, -20%, -25%, -30%	Minimum voltage that the UPS will pass to connected equipment during internal bypass operation.
Output Voltage	230 Vac	200, 208, 220, 230, 240 Vac	Allows the user to select the output voltage while online.
Output Frequency	Automatic 50 ± 3 Hz or 60 ± 3 Hz	Automatic 50 ± 3 Hz, 50 ± 0.1 Hz, 60 ± 3 Hz, 60 ± 0.1 Hz	Sets the allowable UPS output frequency. Whenever possible, the output frequency tracks the input frequency.
Number of Batteries	1	Number of Connected Batteries	Defines the number of connected batteries for proper run time prediction. Default setting of 1 = 1920 VAh (192 V x 10 Ah) Setting of 2 = 3840 VAh, etc.

CONNECT THE EPO (EMERGENCY POWER OFF)

The output power can be disabled in an emergency by closing a switch connected to the EPO.

Adhere to national and local electrical codes when wiring the EPO.
Wiring must be performed by a qualified electrician.

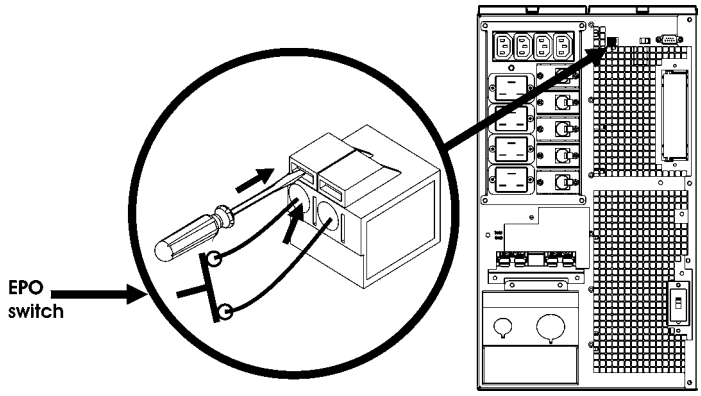

The switch should be connected to a normally open switch contact. External voltage is not required; the switch is driven by 12V internal supply. In closed condition, 2mA of current are drawn

The EPO switch is internally powered by the UPS for use with non-powered switch circuit breakers.

The EPO circuit is considered a Class 2 circuit, (UL, CSA standards) and a SELV circuit (IEC standard).

Both Class 2 and SELV circuits must be isolated from all primary circuitry. Do not connect any circuit to the EPO terminal block unless it can be confirmed that the circuit is Class 2 or SELV.

If circuit standard cannot be confirmed, use a contact closure switch.

Use one of the following cable types to connect the UPS to the EPO switch:

- CL2: Class 2 cable for general use
- CL2P: Plenum cable for use in ducts, plenums, and other spaces used for environmental air.
- CL2R: Riser cable for use in a vertical run in a floor-to-floor shaft.
- CLEX: Limited use cable for use in dwellings and for use in raceways.
- For installation in Canada: Use only CSA certified, type ELC (extra-low voltage control cable).
- For installation in other countries: Use standard low-voltage cable in accordance with local regulations.

4: Storage, Maintenance, Service, and Contact Information

Storage

Store the UPS covered and positioned as for proper functioning, in a cool, dry location, with the batteries fully charged.

Store at Maximum: 50,000 ft (15,000 m)
5° to 113° F (-15 to 45 ° C). Charge the batteries every 6 months.

Battery Replacement

See your dealer or contact APC at the web site, www.apc.com for information on replacement battery modules.

Service

If the UPS requires service do not return it to the dealer. Follow these steps:

1. Review the problems discussed in the *Troubleshooting* section of this manual to eliminate common problems.
2. If the problem persists, contact APC Customer Service through the APC web site, www.apc.com/support.
   - Note the model number of the UPS, the serial number, and the date purchased. If you call APC Customer Service, a technician will ask you to describe the problem and try to solve it over the phone, if possible. If this is not possible, the technician will issue a Returned Material Authorization Number (RMA#).
   - If the UPS is under warranty, repairs are free. If not, there is a repair charge.
   - Procedures for servicing or returning products may vary internationally. Refer to the APC web site.
3. Pack the UPS in its original packaging. If the original packing is not available, refer to the APC web site, www.apc.com/support, for information about obtaining a new set.
   - Pack the UPS properly to avoid damage in transit. Never use Styrofoam beads for packaging. Damage sustained in transit is not covered under warranty.

Always DISCONNECT THE BATTERY(S) before shipping in compliance with U.S. Department of Transportation (DOT) and IATA regulations.

4. Mark the RMA# on the outside of the package.

Return the UPS by insured, prepaid carrier to the address given to you by Customer Service.

Contact APC

In the USA …	Outside the USA …
Refer to the APC web site, www.apc.com/support.	Refer to the APC web site, www.apc.com. Select the appropriate country from the country selection field. Select the *Support* tab at the top of the web page.

5: TROUBLESHOOTING

Use the table below to solve minor installation and operation problems. Refer to the APC web site, www.apc.com, for assistance with complex UPS problems.

PROBLEM AND POSSIBLE CAUSE	SOLUTION
UPS WILL NOT TURN ON	
Battery not connected properly.	Check that the battery connectors are fully engaged.
 button not pushed.	Press the  button once to power the UPS and the connected equipment.
UPS not connected to utility power supply.	Check that the power cable from the UPS to the utility power supply is securely connected at both ends.
Very low or no utility voltage.	Check the utility power supply to the UPS by plugging in a table lamp. If the light is very dim, have the utility voltage checked.
UPS WILL NOT TURN OFF	
 button not pushed.	Press the  button once to turn the UPS off.
Internal UPS fault.	Do not attempt to use the UPS. Unplug the UPS and have it serviced immediately.
UPS BEEPS OCCASIONALLY	
Normal UPS operation when running on battery.	None. The UPS is protecting the connected equipment.
UPS DOES NOT PROVIDE EXPECTED BACKUP TIME	
The UPS battery(s) are weak due to a recent outage or battery(s) are near the end of their service life.	Charge the battery(s). Batteries require recharging after extended outages. They wear faster when put into service often or when operated at elevated temperatures. If the battery(s) are near the end of their service life, consider replacing the battery(s) even if the *Replace Battery* LED is not illuminated.
FRONT PANEL LEDS FLASH SEQUENTIALLY	
The UPS has been shut down remotely through software or an optional accessory card.	None. The UPS will restart automatically when utility power returns.
ALL LEDS ARE OFF AND THE UPS IS PLUGGED INTO A WALL OUTLET	
The UPS is shut down and the battery is discharged from an extended outage.	None. The UPS will return to normal operation when the power is restored and the battery has a sufficient charge.
BYPASS AND OVERLOAD LEDS ILLUMINATE, UPS EMITS A SUSTAINED ALARM TONE	
The UPS is overloaded	The connected equipment exceeds the specified "maximum load" as defined in *Specifications* on the APC web site, www.apc.com. The alarm remains on until the overload is removed. Disconnect nonessential equipment from the UPS to eliminate the overload condition.

Problem and Possible Cause	Solution
Bypass LED illuminates	
The bypass switch has been turned on manually or through an accessory.	If bypass is the chosen mode of operation, ignore the illuminated LED. If bypass is not the chosen mode of operation move the bypass switch on the back of the UPS, to the *normal* position.
Fault and overload LEDs illuminate, UPS emits a sustained alarm tone	
The UPS has ceased sending power to connected equipment.	The connected equipment exceeds the specified "maximum load" as defined in *Specifications* on the APC web site, www.apc.com. Disconnect nonessential equipment from the UPS to eliminate the overload condition. Press the OFF button, then the ON button to restore power to connected equipment.
Fault LED illuminates	
Internal UPS fault.	Do not attempt to use the UPS. Turn the UPS off and have it serviced immediately.
Replace battery LED illuminates	
Replace Battery LED flashes and short beep is emitted every two seconds to indicate the battery is disconnected.	Check that the battery connectors are fully engaged.
Weak battery.	Allow the battery to recharge for 24 hours. Then, perform a self-test. If the problem persists after recharging, replace the battery.
Failure of a battery self-test.	The UPS emits short beeps for one minute and the *Replace Battery* LED illuminates. The UPS repeats the alarm every five hours. Perform the self-test procedure after the battery has charged for 24 hours to confirm the *Replace Battery* condition. The alarm stops and the LED clears if the battery passes the self-test.
UPS operates on battery although line voltage exists	
Very high, low, or distorted line voltage. Inexpensive fuel powered generators can distort the voltage.	Move the UPS to a different outlet on a different circuit. Test the input voltage with the utility voltage display.
Diagnostic Utility Voltage	
All five LEDs are illuminated	The line voltage is extremely high and should be checked by an electrician.
There is no LED illumination	If the UPS is plugged into a properly functioning utility power outlet, the line voltage is extremely low.
Online LED	
There is no LED illumination	The UPS is running on battery, or it is not turned on.
The LED is blinking	The UPS is running an internal self-test.

REGULATORY AND WARRANTY INFORMATION

Regulatory Agency Approvals and Radio Frequency Warnings

220, 230, 240 V MODELS

This is a Class A product. In a domestic environment this product may cause radio interference, in which case the user may be required to take corrective actions.

N394 ME 61

LISTED 42C2
E95463 LR 63938

This equipment has been tested and found to comply with the limits for a Class A digital device, pursuant to Part 15 of the FCC rules. These limits are designed to provide reasonable protection against harmful interference when the equipment is operated in a commercial environment. This equipment generates, uses, and can radiate radio frequency energy. If it is not installed and used in accordance with the instruction manual, it may cause harmful interference to radio communications. Operation of this equipment in a residential area is likely to cause harmful interference, in which case users will be required to take whatever measures may be necessary to correct the interference at their own expense.

EC Declaration of Conformity Date of product declaration 2004

We, the undersigned, declare under our sole responsibility that the equipment specified below conforms to the following standards and directives:

Standards to Which Conformity Declared:

EN62040-1-1; En55022; EN55024;
EN61000-3-2, 3-3, 4-2, 4-4, 4-5, 4-6, 4-8, 4-11;
EN60950-1; IEC60950-1

Application of Council Directives:

73/23/EEC; 93/68/EEC

Type of Equipment:

Power Supply

Model Numbers:

SURT7500XLI; SURT7500UXI
SURT10000XLI; SURT10000UXI

Importer's Name and Address:

American Power Conversion
Ballybritt Business Park
Galway, Ireland

Manufacturer's Name and Address:

American Power Conversion (A.P.C.)
Ballybritt Business Park.
Galway, Ireland

American Power Conversion
132 Fairgrounds Rd.
West Kingston, RI 02892 USA

APC (Suzhou) UPS Co.,Ltd
339 Suhong Zhong Lu
Suzhou Industrial Park
Suzhou Jiangau 2215021
P. R. China

APC India Pvt. Ltd.
187/3, 188/3, Jigani Industrial Area
Bangaldore, 562106
Kanataka
India

American Power Conversion
Lot 3, Block 14, Phase 3
PEZA, Rosario, Cavite
Philippines

American Power Conversion
2nd Street
PEZA, Cavite Economic Zone
Rosario, Cavite
Philippines

American Power Conversion
Lot 10, Block 16, Phase 4
PEZA, Rosario, Cavite
Philippines

APC Brasil LTDA.
Al Xingu, 850
Barueri
Alphaville/Sao Paulo
06455-030
Brazil

Place: Galway, Ireland — **Ray S. Ballard Managing Director, Europe** — **5 Jan 04**

Place: N. Billerica, MA USA — **Richard J. Everett Sr. Regulatory Compliance Engineer** — **5 Jan 04**

Limited Warranty

American Power Conversion (APC) warrants its products to be free from defects in materials and workmanship for a period of two years from the date of purchase. Its obligation under this warranty is limited to repairing or replacing, at its own sole option, any such defective products. To obtain service under warranty you must obtain a Returned Material Authorization (RMA) number from customer support. Products must be returned with transportation charges prepaid and must be accompanied by a brief description of the problem encountered and proof of date and place of purchase. This warranty does not apply to equipment that has been damaged by accident, negligence, or misapplication or has been altered or modified in any way. This warranty applies only to the original purchaser who must have properly registered the product within 10 days of purchase.

EXCEPT AS PROVIDED HEREIN, AMERICAN POWER CONVERSION MAKES NO WARRANTIES, EXPRESSED OR IMPLIED, INCLUDING WARRANTIES OF MERCHANTABILITY AND FITNESS FOR A PARTICULAR PURPOSE. Some states do not permit limitation or exclusion of implied warranties; therefore, the aforesaid limitation(s) or exclusion(s) may not apply to the purchaser.

EXCEPT AS PROVIDED ABOVE, IN NO EVENT WILL APC BE LIABLE FOR DIRECT, INDIRECT, SPECIAL, INCIDENTAL, OR CONSEQUENTIAL DAMAGES ARISING OUT OF THE USE OF THIS PRODUCT, EVEN IF ADVISED OF THE POSSIBILITY OF SUCH DAMAGE. Specifically, APC is not liable for any costs, such as lost profits or revenue, loss of equipment, loss of use of equipment, loss of software, loss of data, costs of substitutes, claims by third parties, or otherwise.

Entire contents copyright © 2004 by American Power Conversion Corporation. All rights reserved. Reproduction in whole or in part without permission is prohibited.

APC, Smart-UPS, and PowerChute are registered trademarks of American Power Conversion Corporation. All other trademarks are the property of their respective owners.