

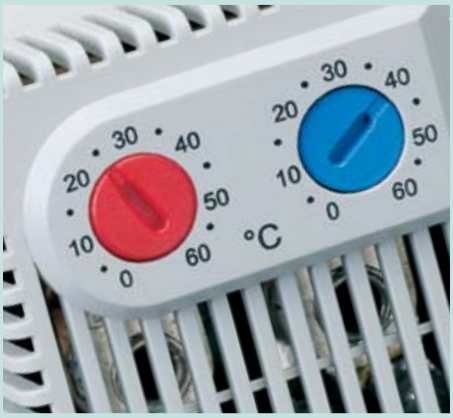





Product Catalogue

STEGO

Content

Heating

Small semiconductor Heater HGK 047 Series 3
Semiconductor Heater HG 040 Series 4
Semiconductor Heater HG 140 Series 5
Semiconductor Heater CS 060 Series 6
Semiconductor Heater CSF 060 Series 7
Small semiconductor Fan Heater CS 028 8
Space-saving Fan Heater HV 031 / HVL 031 Series 9
Compact Fan Heater HGL 046 Series 10
Semiconductor Fan Heater CR 027 11
Fan Heater with integrated thermostat or hygrostat CR 030 12
Fan Heater with integrated thermostat or hygrostat CR 130 13

Ventilating

Low maintenance Filter Fan FF 018 Series (21m³/h to 102m³/h) 14 + 15
Low maintenance Filter Fan FF 018 Series (200m³/h) 16
High-performance Filter Fan FF 018 Series (300m³/h) 17
High-performance Filter Fan FF 018 Series (550m³/h) 18
Outdoor Filter Fan FF 018 Series 19
Roof Filter Fan RFF 018 Series 20

Regulating and Monitoring

Airflow Monitor LC 013 / LCF 013 21
Small, compact Thermostat KTO 011 / KTS 011 22
Fix Thermostat FTO 011 / FTS 011 23
Dual Thermostat ZR 011 24
Dual Thermostat FTD 011 25
Mechanical Thermostat FZK 011 26
Electronic Thermostat ET 011 (24VDC) 27
Electronic Relay SM 010 (24VDC + 48VDC) 28
Mechanical Hygrostat MFR 012 29
Electronic Hygrotherm ETF 012 30

Lighting

Compact Lamp with on/off switch KL 025 Series 31
Slimline Lamp with on/off switch SL 025 Series 32
Slimline Lamp with movement sensor SL 025 Series 33
Dual Lamp with on/off switch DL 026 Series 34
Dual Lamp with movement sensor DL 026 Series 35
Hand Lamp with lamp holder DL 026 Series 36

Accessories

Electrical Socket SD 035 Series 37
Pressure compensation Device DA 084 38
Pressure compensation Device DA 284 39
Pressure compensation Device DA 284 (stainless steel) 40

Calculation of temperature control in enclosures 41

Indication of measurements in mm. Errors and omissions excepted. Specifications are subject to change without notice.Suitability of the products for their intended use and any associated risks must be determined by the end customer/buyer in their final application.

© STEGO Elektrotechnik GmbH 01/2007



- **Dynamic heating up**
- **Energy saving**
- **Wide voltage range**
- **Temperature limiting**
- **Clip fixing**

The heaters are used in enclosures where condensation is to be prevented or the temperature may not fall below a minimum value. In this way corrosion is avoided and an even temperature is ensured.

CE

Technical Data

Heating element	PTC resistor, self regulating and temperature limiting
Heater body	extruded aluminium profile, anodised
Mounting	clip for 35mm DIN rail, EN 50022
Fitting position	vertical
Operating / Storage temperature	-45 to +70°C (-49 to +158°F)
Protection type / Protection class	IP54 / I (earthed)
Accessories	screw fixing, Order No. 8MR2110-1Z (1 packing unit = 2 pieces)
Note	24 V DC heaters on request

Example of connection

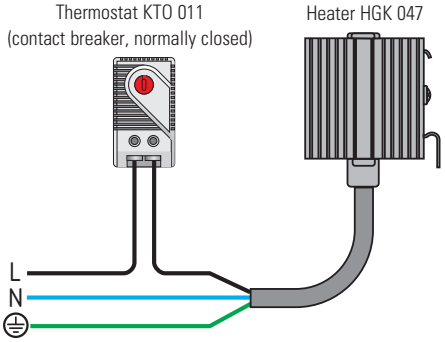

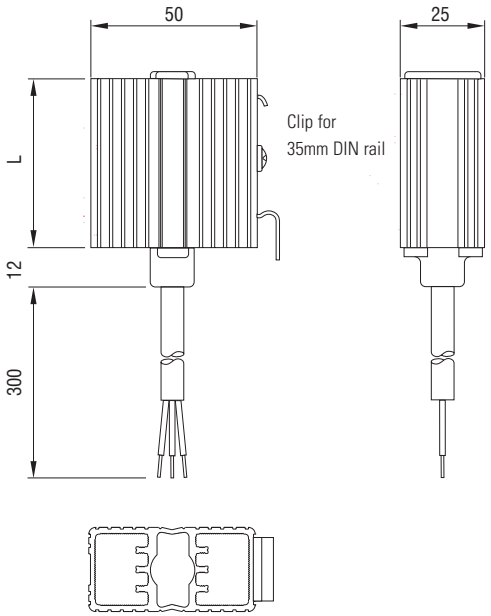

Order No.	Operating voltage	Heating capacity[1]	Inrush current max.	Length (L)	Weight (approx.)	Connection	Approvals
8MR2110-0B	120-240V AC/DC[2]	10W	1.0A	50mm	0.10kg	3 x 0.5mm² x 300mm sheathed cable (silicone)	VDE
8MR2110-2B	120-240V AC/DC[2]	20W	2.5A	60mm	0.20kg	3 x 0.5mm² x 300mm sheathed cable (silicone)	VDE
8MR2110-3B	120-240V AC/DC[2]	30W	3.0A	70mm	0.20kg	3 x 0.5mm² x 300mm sheathed cable (silicone)	VDE
8MR2110-0C	110-120V AC/DC	10W	1.0A	50mm	0.10kg	3 x AWG 20 x 300mm sheathed cable	UL File No. E150057
8MR2110-2C	110-120V AC/DC	20W	1.5A	70mm	0.20kg	3 x AWG 20 x 300mm sheathed cable	UL File No. E150057
8MR2110-3C	110-120V AC/DC	30W	1.5A	100mm	0.20kg	3 x AWG 20 x 300mm sheathed cable	UL File No. E150057

[1] at 20°C (68°F) ambient temperature

[2] (min. 110V, max 265V) Operating with voltages below 140V AC/DC reduces heating performance by approx. 10%.

Semiconductor Heater HG 040 Series 15W to 150W



- Dynamic heating up
- Temperature limiting
- Wide voltage range
- Energy saving
- Clip fixing
- Protection type IP44

These heaters are used in enclosures where damage from condensation must be prevented, or where the temperature may not fall below a minimum value. The aluminium profile heater body design has a chimney effect and distributes the heat evenly.

CE

Technical Data

Heating element	PTC resistor, self regulating and temperature limiting
Heater body	extruded aluminium profile, anodised
Mounting	clip for 35mm DIN rail, EN 50022
Fitting position	vertical
Operating / Storage temperature	-45 to +70°C (-49 to +158°F)
Protection type / Protection class	IP44 / I (earthed)
ccessories	screw fixing, Order No. 8MR2110-1Z (1 packing unit = 2 pieces)
Note	24 V DC heaters on request

Example of connection

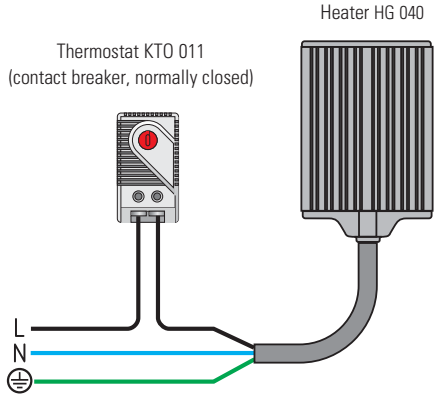

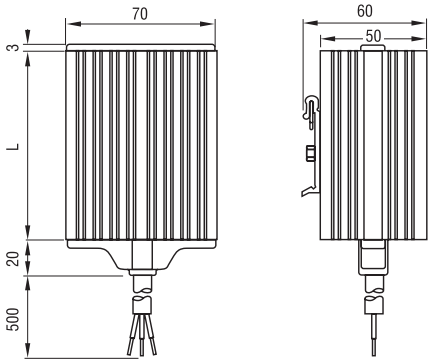

Order No.	Operating voltage	Heating capacity[1]	Inrush current max.	Length (L)	Weight (approx.)	Connection	Approvals
8MR2110-1A	120-240V AC/DC[2] (min. 110V, max. 265V)	15W	1.5A	65mm	0.30kg	3 x 0.75mm² x 500mm sheathed cable (silicone)	VDE
8MR2110-3A	120-240V AC/DC[2] (min. 110V, max. 265V)	30W	3.0A	65mm	0.30kg	3 x 0.75mm² x 500mm sheathed cable (silicone)	VDE
8MR2110-4A	120-240V AC/DC[2] (min. 110V, max. 265V)	45W	3.5A	65mm	0.30kg	3 x 0.75mm² x 500mm sheathed cable (silicone)	VDE
8MR2110-6A	120-240V AC/DC[2] (min. 110V, max. 265V)	60W	2.5A	140mm	0.40kg	3 x 0.75mm² x 500mm sheathed cable (silicone)	VDE
8MR2110-7A	120-240V AC/DC[2] (min. 110V, max. 265V)	75W	4.0A	140mm	0.50kg	3 x 0.75mm² x 500mm sheathed cable (silicone)	VDE
8MR2111-0A	120-240V AC/DC[2] (min. 110V, max. 265V)	100W	4.5A	140mm	0.50kg	3 x 0.75mm² x 500mm sheathed cable (silicone)	VDE
8MR2111-5A	120-240V AC/DC[2] (min. 110V, max. 265V)	150W	9.0A	220mm	0.70kg	3 x 0.75mm² x 500mm sheathed cable (silicone)	VDE
8MR2110-1D	110-120V AC/DC* (min. 100V, max. 132V)	15W	1.0A	65mm	0.30kg	3 x AWG 18 x 500mm sheathed cable	UL File No. E150057
8MR2110-3D	110-120V AC/DC* (min. 100V, max. 132V)	30W	1.0A	65mm	0.30kg	3 x AWG 18 x 500mm sheathed cable	UL File No. E150057
8MR2110-4D	110-120V AC/DC* (min. 100V, max. 132V)	50W	2.0A	140mm	0.50kg	3 x AWG 18 x 500mm sheathed cable	UL File No. E150057
8MR2110-7D	110-120V AC/DC* (min. 100V, max. 132V)	80W	2.5A	220mm	0.70kg	3 x AWG 18 x 500mm sheathed cable	UL File No. E150057
8MR2110-0D	110-120V AC/DC* (min. 100V, max. 132V)	100W	4.5A	220mm	0.70kg	3 x AWG 18 x 500mm sheathed cable	UL File No. E150057

[1] at 20°C (68°F) ambient temperature

[2] Operating with voltages below 140V AC/DC reduces heating performance by approx. 10%.



- Pressure clamp connectors
- Dynamic heating up
- Wide voltage range
- Temperature limiting
- Energy saving
- Clip fixing
- Quick installation

These heaters are used in enclosures where damage from condensation must be prevented, or where the temperature may not fall below a minimum value. The aluminium profile heater body design has a chimney effect and distributes the heat evenly. The pressure clamp connectors save time and simplify installation.

Technical Data

Operating voltage	120-240V AC/DC* (min. 110V, max. 265V)
Heating element	PTC resistor, self regulating and temperature limiting
Heater body	extruded aluminium profile, anodised
Connection	3 pressure clamps for stranded wire 0.5-1.5mm² (with wire
	end ferrule) and rigid wire 0.5-2.5mm²
Connection casing	plastic according to UL94 V-0, black
Mounting	clip for 35mm DIN rail, EN 50022
Fitting position	vertical
Operating / Storage temperature	-45 to +70°C (-49 to +158°F)
Protection type / Protection class	IP20 / I (earthed)
Approvals	VDE + UL File No. E150057
Accessories	screw fixing, Order No. 09024.0-00 (1 packing unit = 2 pieces)
Note	24 V DC heaters on request

*Operating with voltages below 140V AC/DC reduces heating performance by approx. 10%.

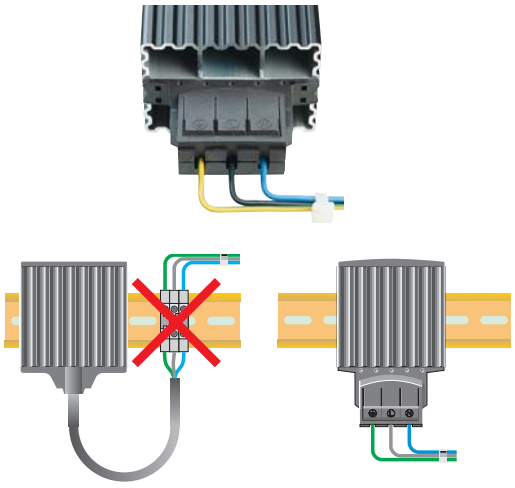

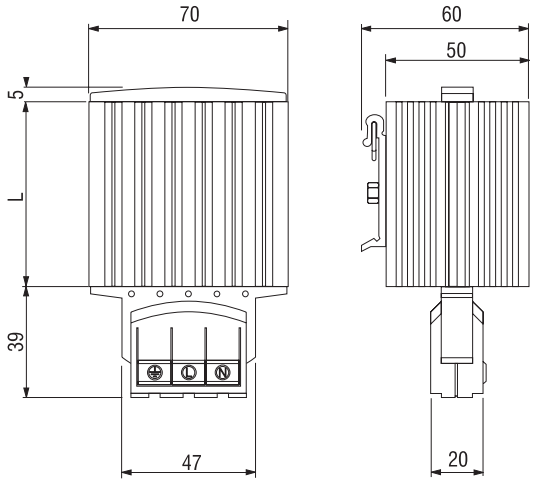

Order No.	Heating capacity*	Inrush current max.	Length (L)	Weight (approx.)
8MR2130-1A	15W	1.5A	65mm	0.30kg
8MR2130-3A	30W	3.0A	65mm	0.30kg
8MR2130-4A	45W	3.5A	65mm	0.30kg
8MR2130-6A	60W	2.5A	140mm	0.40kg
8MR2130-7A	75W	4.0A	140mm	0.50kg
8MR2130-0A	100W	4.5A	140mm	0.50kg
8MR2130-5A	150W	9.0A	220mm	0.70kg

*at 20°C (68°F) ambient temperature

Touch-Safe Heater (semiconductor) CS 060 Series 50 to 150W



- **Low surface temperature**
- **Quick mounting due to clip fixing**
- **Double insulated (plastic)**
- **Wide voltage range**
- **Small size**

Touch-safe heater for the use in enclosures with electrical/electronical components. The design of the heater supports the natural convection which results in a high air-current of warm air. The surface temperatures on the accessible side surfaces of the housing are kept down as a result of the heater design. Our complete range of thermostats and hygrostats can directly be connected to the heater CS 060. This heater is also available in a version with plug-in thermostat requiring no additional wiring (CSF 060). Both versions are designed for permanent operation.

CE

Technical Data

Operating voltage	120-240V AC/DC* (min. 110V, max. 265V)
Heating capacity	see table
Heating element	PTC resistor - temperature limiting
Surface temperature	< 80°C (176°F), except upper protective grille
Connection	4-pole terminal 2,5mm², torque 0.8Nm max.
Mounting	clip for 35mm DIN rail, EN 50022
Casing	plastic according to UL94 V-0, black
Fitting position	vertical
Operating / Storage temperature	-45 to +70°C (-49 to +158°F)
Prot. type/prot. class	IP20 / II (double insulated)
Approvals	VDE and UL intended
Note	other voltages on request

*Operating with voltages below 140V AC/DC reduces heating performance by approx. 10%.

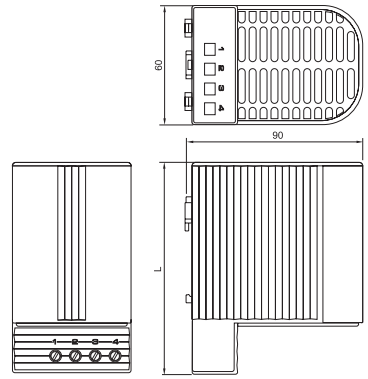

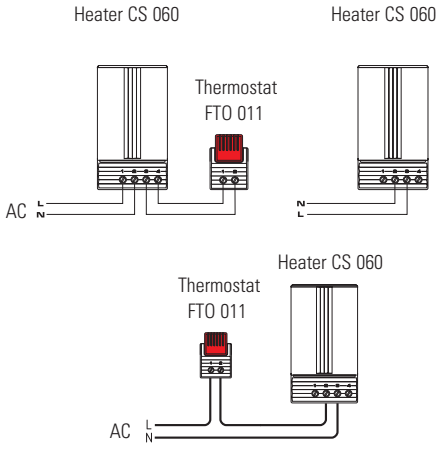

Examples of connection

Heating capacity / Ambient temperature diagram CS 060

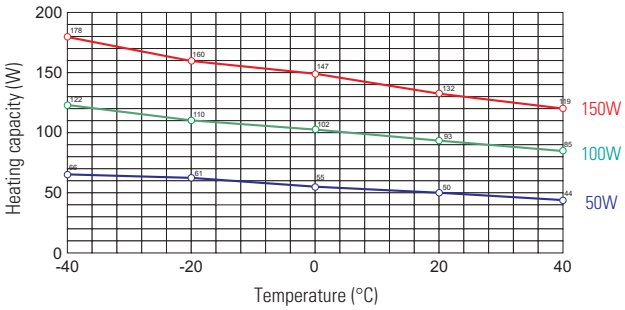

Order No.	Heating capacity[1)]	Max. inrush current	Air outlet temperature[2)]	Dimensions	Weight (approx .)
8MR2131-4A	50W	2.5A	86°C (186.8°F)	110 x 60 x 90mm	0.29kg
8MR2131-0A	100W	4.5A	120°C (248°F)	110 x 60 x 90mm	0.30kg
8MR2131-5A	150W	8A	145°C (293°F)	150 x 60 x 90mm	0.44kg

[1)] ambient temperature - see Heating capacity / Ambient temperature diagram; [2)] measured 50mm above protective grille;

Touch-Safe (semiconductor) Heater CSF 060 Series 50W to 150W



- Low surface temperature
- Integrated thermostat
- Quick mounting due to clip fixing
- Double insulated (plastic)
- Wide voltage range
- Small size

Touch-safe heater for the use in enclosures with electrical/electronical components. The design of the heater supports the natural convection which results in a high air-current of warm air. The surface temperatures on the accessible side surfaces of the housing are kept down as a result of the heater design. This model with plug-in thermostat does not require additional wiring. The heaters are designed for permanent operation. This heater is also available in a version without thermostat (CS 060).

CE

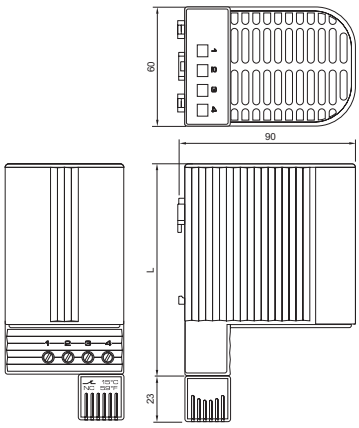

Technical Data

Operating voltage	120-240VAC* (min. 110V, max. 265V)
Heating capacity	see table
Heating element	PTC resistor - temperature limiting
Surface temperature	< 80°C (176°F), except upper protective grille
Connection	4-pole terminal 2,5mm², torque 0.8Nm max.
Mounting	clip for 35mm DIN rail, EN 50022
Casing	plastic according to UL94 V-0, black
Fitting position	vertical
Operating / Storage temperature	-20 to +70°C (-4 to +158°F) / -45 to +70°C (-49 to +158°F)
Prot. type/prot. class	IP20 / II (double insulated)
Approvals	VDE and UL intended
Note	other voltages on request

*Operating with voltages below 140VAC reduces heating performance by approx. 10%.

Heater CSF 060

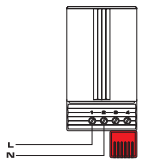

Example of connection

Heating capacity / Ambient temperature diagram CSF 060

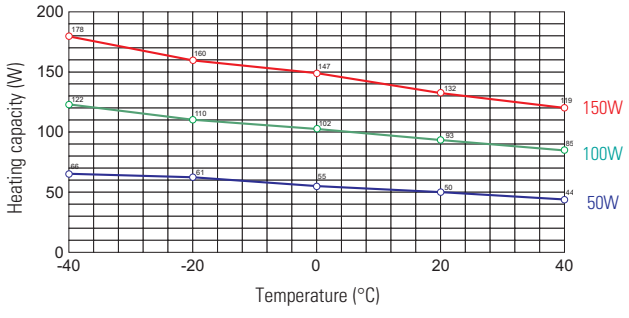

Order No.	Heating capacity[1]	Max. inrush current	Air outlet temperature[2]	Switch-off temperature[3]	Starting temperature[3]	Dimensions	Weight (approx.)
8MR2132-1A	50W	2.5A	86°C (186.8°F)	15°C (59°F)	5°C (41°F)	110 x 60 x 90mm	0.30kg
8MR2132-1AB	50W	2.5A	86°C (186.8°F)	25°C (77°F)	15°C (59°F)	110 x 60 x 90mm	0.30kg
8MR2132-0A	100W	4.5A	120°C (248°F)	15°C (59°F)	5°C (41°F)	110 x 60 x 90mm	0.31kg
8MR2132-0AB	100W	4.5A	120°C (248°F)	25°C (77°F)	15°C (59°F)	110 x 60 x 90mm	0.31kg
8MR2132-5A	150W	8A	145°C (293°F)	15°C (59°F)	5°C (41°F)	150 x 60 x 90mm	0.44kg
8MR2132-5AB	150W	8A	145°C (293°F)	25°C (77°F)	15°C (59°F)	150 x 60 x 90mm	0.44kg

[1] ambient temperature - see Heating capacity / Ambient temperature diagram; [2] measured 50mm above protective grille; [3] tolerance of ± 3K;

Small semiconductor Fan Heater CS 028 150W



- **Small, compact design**
- **Quiet in operation**
- **Dynamic heating up**
- **Clip or screw fixing**

Fan heater prevents formation of condensation and provides an evenly distributed interior air temperature in enclosures with electric/electronic components. The heater is connected using the internal terminal connectors The CS 028's small size make it ideal for use in enclosures where space is at a premium.

CE

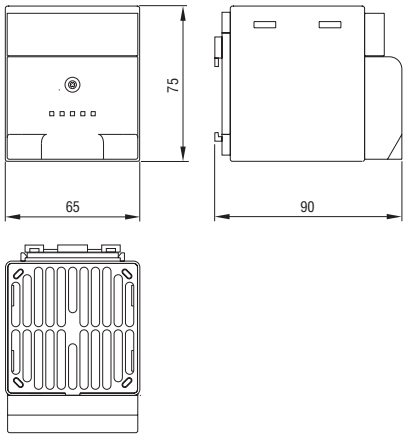

View: back side

Screw fixing Clip fixing

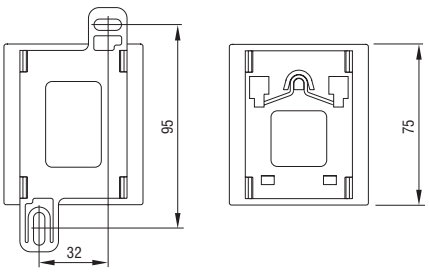

Example of connection

KTO 011
(contact breaker, normally closed)

Fan Heater CS 028

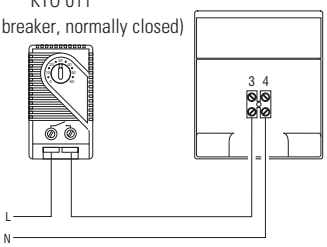

Technical Data

Heating element	PTC heating element
Current at make	max. 2A at 230VAC, max. 5A at 120VAC
Surface temperature	max. 50°C at casing; 100°C at upper protective grille
	at 20°C (68°F) ambient temperature
Axial fan, ball baring	air flow 13.8 m³/h, free flow (service life 40,000h at 40°C)
Connection	2-pole clamp max. 2.5mm², clamping screw torque 0.8Nm max.
Mounting	clip for 35 mm DIN rail, EN 50022 or screw fixing (Ø 5.3 mm)
Casing	plastic according to UL94-0, black
Weight	approx. 0.30kg
Fitting position	vertical
Operating/storage temperature	-45 to +70°C (-49 to +158°F)
Prot. type/prot. class	IP20 / II (double insulated)
Note	other voltages on request

Heating capacity / Ambient temperature diagram
CS 028 (150W)

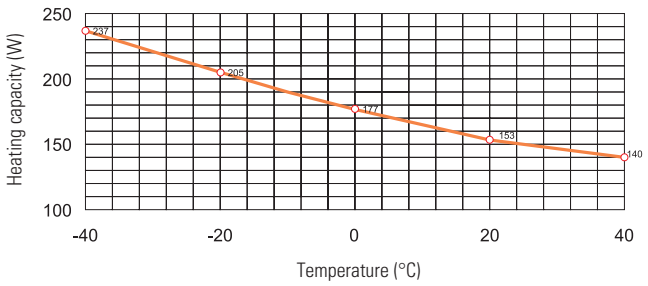

Order No.	Operating voltage	Heating capacity*	Dimensions	Mounting	Approvals
8MR2150-2C	230VAC, 50/60Hz	150W	87 x 65 x 75mm	Clip fixing	VDE intended
8MR2150-2D	230VAC, 50/60Hz	150W	87 x 65 x 114mm	Screw fixing	VDE intended

*at 20°C (68°F) ambient temperature

Space-saving Fan Heater HV 031 / HVL 031 Series 100W to 400W



- Compact
- Flat design
- High air through-flow
- Temperature safety cut-out
- Clip fixing

The compact high-performance fan heater prevents formation of condensation in control or switch systems and provides an evenly distributed interior air temperature in enclosures. This fan heater is available without fan (HV 031) as well as with fan (HVL 031).

Technical Data

HV 031	Heater without fan (fan mounting kit included)
HVL 031	Heater with fan
Heating element	high performance cartridge
Temperature safety cut-out	to protect against overheating in case of fan failure
Heater body	die-cast aluminium (glass bead blasted)
Connection	3-pole screw connector 2.5mm², clamping torque 0.8Nm max.
Connection casing	plastic according to UL94 V-0, black
Mounting	clip for 35mm DIN rail, EN 50022
Fitting position	horizontal
Operating / Storage temperature	-45 to +70°C (-49 to +158°F)
Protection type / Protection class	IP20 / I (earthed)
***Axial fan, ball bearing**	airflow see table
	service life 50,000h at 25°C (77°F)
***Connection (axial fan)**	2-pole screw connector 2.5mm² (L2/N2)
(*HVL 031 only)	
Approvals	VDE + UL File No. E187294

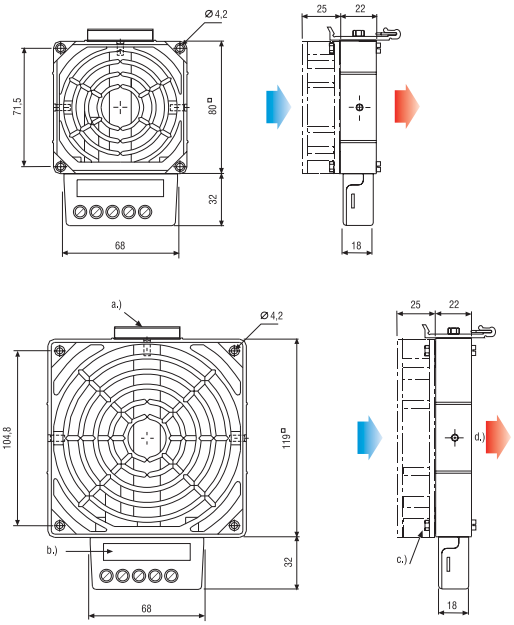

a.) Clip
b.) Type plate
c.) Axial fan
d.) Air direction



Important! Heater may only be operated together with fan. Danger of overheating!

Order No. HV 031 (without fan)	Operating Voltage	Heating capacity	Dimensions	Weight (approx.)
8MR2140-0A	230VAC, 50/60Hz	100W	80 x 112 x 22mm	0.40kg
8MR2140-1A	230VAC, 50/60Hz	150W	80 x 112 x 22mm	0.40kg
8MR2140-2A	230VAC, 50/60Hz	200W	119 x 151 x 22mm	0.50kg
8MR2140-3A	230VAC, 50/60Hz	300W	119 x 151 x 22mm	0.50kg
8MR2140-4A	230VAC, 50/60Hz	400W	119 x 151 x 22mm	0.50kg

Order No. HVL 031 (with fan)	Operating Voltage	Heating capacity	Airflow min., free flow	Dimensions	Weight (approx.)
8MR2140-0B	230VAC, 50/60Hz	100W	35m³/h	80 x 112 x 47mm	0.60kg
8MR2140-1B	230VAC, 50/60Hz	150W	35m³/h	80 x 112 x 47mm	0.60kg
8MR2140-2B	230VAC, 50/60Hz	200W	108m³/h	119 x 151 x 47mm	0.90kg
8MR2140-3B	230VAC, 50/60Hz	300W	108m³/h	119 x 151 x 47mm	0.90kg
8MR2140-4B	230VAC, 50/60Hz	400W	108m³/h	119 x 151 x 47mm	0.90kg

Compact Fan Heater Series HGL 046 250W, 400W



- **Compact Design**
- **Clip fixing**
- **Long service life**
- **Maintenance free**
- **Temperature safety cut-out**

Compact fan heater prevents formation of condensation. The integrated high performance axial fan provides forced air circulation and so guarantees an even temperature in enclosures. With internal terminal connector.

CE

Technical Data

Heating element	resistance heater
Temperature safety cut-out	to protect against overheating in case of fan failure
Heater body	anodised extruded aluminium profile
Surface temperature	max. 75°C (400W)
Axial fan, ball bearing	Airflow, free flow
	AC: 45m³/h (50Hz) or 54m³/h (60Hz)
	DC: 54m³/h
	service life 50,000h at 25°C (77°F)
Connection	internal connection terminal 1.5mm² with strain relief,
	clamping torque 0.8Nm max.
Connection casing	plastic according to UL94 V-0, black
Mounting	clip for 35mm DIN rail, EN 50022
Fitting position	vertical
Operating / Storage temperature	-45 to +70°C (-49 to +158°F)
Protection type / Protection class	IP20 / I (earthed)

Note: In the case of 24VDC and 48VDC the fan heater has to be switched via a relay. For this purpose we recommend our electronic relay SM 010 (Order No. 8MR2180-1A and 8MR2180-1B).

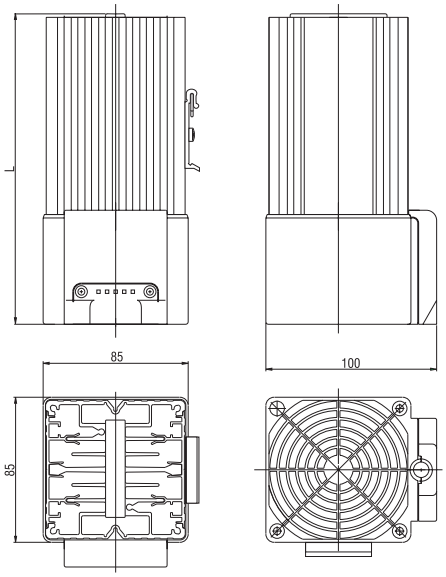

View from below

Electronic relay SM 010

Control contact, e.g. Temperature regulator KTO 011

Control contact, e.g. Temperature regulator KTO 011

Heater
Fan Heater HGL 046 (DC 48V) with temperature safety cut-out

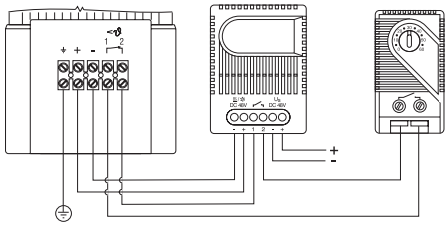

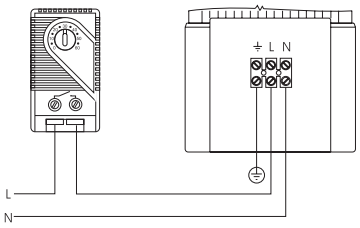

Heater
Fan Heater HGL 046 (AC 230V and 120V) with temperature safety cut-out

Order No.	Operating voltage	Heating capacity	Length (L)	Weight (approx.)	Approvals
8MR2122-4A	230VAC, 50/60Hz	250W	182mm	1.10kg	VDE + UL File No. E150057
8MR2122-8A	230VAC, 50/60Hz	400W	222mm	1.40kg	VDE + UL File No. E150057
8MR2122-4B	120VAC, 50/60Hz	250W	182mm	1.10kg	VDE + UL File No. E150057
8MR2122-8B	120VAC, 50/60Hz	400W	222mm	1.40kg	VDE + UL File No. E150057
8MR2122-4AB	24VDC	250W	182mm	1.10kg	-
8MR2122-4AC	48VDC	250W	182mm	1.10kg	-
8MR2122-8AA	48VDC	400W	222mm	1.40kg	-

Semiconductor Fan Heater CR 027 up to 650W



- Compact heater
- PTC Technology
- Adjustable temperature range
- Clip fixing
- Optical indicator
- Temperature safety cut-out
- Double insulated

Semiconductor fan heaters prevent the formation of condensation and ensure en even temperature in switch and control equipment. The built-in regulator is used to set the desired temperature.

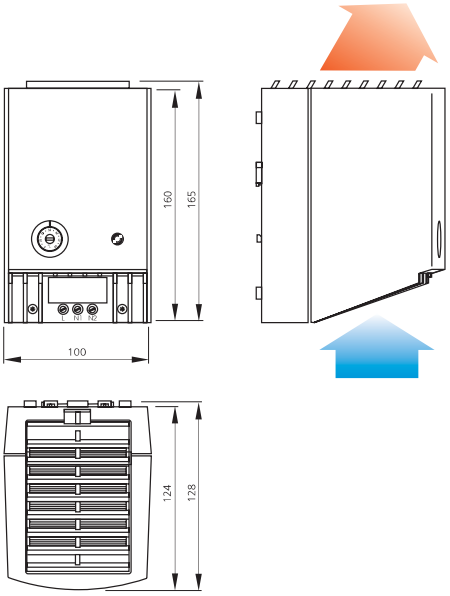

Technical Data

Heating element	PTC resistor, self regulating and temperature limiting
Temperature safety cut-out	to protect against overheating in case of fan failure
Axial fan, ball bearing	airflow see table
	service life 50,000h at 25°C (77°F)
Casing	plastic according to UL94 V-0, light grey
Optical indicator	thermostat control lamp
Connection	2-pole clamp 2.5mm², clamping torque 0.8Nm max.
Mounting	clip for 35mm DIN rail, EN 50022
Fitting position	vertical
Operating / Storage temperature	0 to +60°C (+32 to +140°F) / -45 to +70°C (-49 to +158°F)
Dimensions	100 x 128 x 165mm
Protection type / Protection class	IP20 / II (double insulated)
Approvals	UL File No. E204590

Heating capacity / Ambient temperature diagram CR 027 (50Hz)

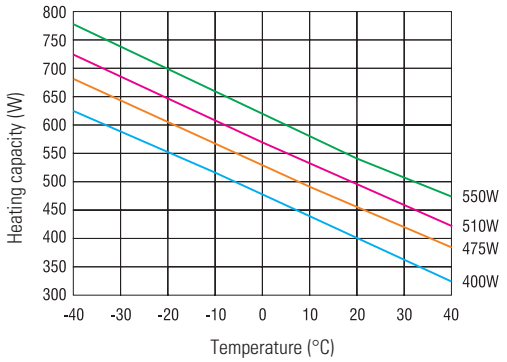

Heating capacity / Ambient temperature diagram CR 027 (60Hz)

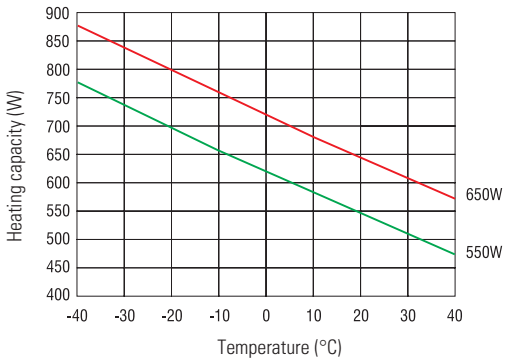

Order No.	Operating voltage	Heating capacity* (50Hz)	Heating capacity* (60Hz)	Inrush current max.	Airflow, free flow	Setting range Temp. regulator	Weight (approx.)
8MR2140-3C	220-240VAC, 50/60Hz	475W	550W	11.0A	35m³/h	0 to +60°C	0.90kg
8MR2140-5C	220-240VAC, 50/60Hz	550W	650W	13.0A	45m³/h	0 to +60°C	1.10kg
8MR2140-3D	100-120VAC, 50/60Hz	400W	550W	14.0A	35m³/h	+32 to +140°F	0.90kg
8MR2140-5D	100-120VAC, 50/60Hz	510W	650W	15.0A	45m³/h	+32 to +140°F	1.10kg

*at 20°C (68°F) ambient temperature

Compact high-performance Fan Heater CR 030 950W



Compact design
Double insulated
Integrated thermostat or hygrostat

The compact high performance fan heater prevents formation of condensation and provides an evenly distributed interior air temperature in enclosures with electric/electronic components. The plastic enclosure provides double insulation and acts as protection against contact. The fan heater is available with integrated thermostat or pre-set hygrostat for temperature or humidity control. The CR 030 was designed as a stationary unit for the bottom of the enclosure. For wall fixing the fan heater CR 130 is recommended.

Technical Data

Heating element	high performance cartridge
Temperature safety cut-out	to protect against overheating in case of fan failure
Heater body	extruded aluminium profile
Axial fan, ball bearing	airflow 160m³/h, free flow
	service life 50,000h at 25°C (77°F)
Casing	plastic according to UL94 V-0, black
Connection	2-pole max. 2.5mm², clamping screw with strain relief,
	torque 0.8Nm max.
Mounting	screw fixing (M5)
Fitting position	horizontal
Operating /Storage temperature	0 to +60°C (+32 to +140°F) / -45 to +70°C (-49 to +158°F)
Dimensions	168 x 145 x 100mm
Weight	approx. 1.40kg
Protection type / Protection class	IP20 / II (earthed)
Approvals	VDE + UL File No. E234324
Note	other heating capacities from 200W up available on request

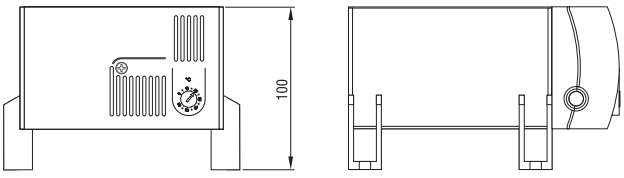

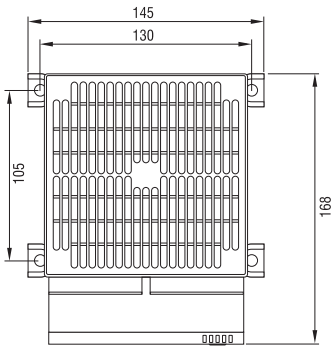

Connection diagram

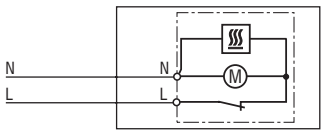

Order No.	Model	Operating voltage	Heating capacity	Setting range
8MR2150-9A	Fan Heater with thermostat	230VAC, 50/60Hz	950W	0 to +60°C
8MR2150-9BA	Fan Heater with hygrostat	230VAC, 50/60Hz	950W	65% RH, factory-set

Compact high-performance Fan Heater CR 130 950W



Compact design
Double insulated
Integrated thermostat or hygrostat
Optional clip or screw fixing

The compact high performance fan heater prevents formation of condensation and provides an evenly distributed interior air temperature in enclosures with electric/electronic components. The plastic enclosure provides double insulation and acts as protection against contact. The fan heater is available with integrated thermostat or pre-set hygrostat for temperature or humidity control. The CR 130 was designed as a stationary unit for wall fixing. For fixing on the bottom of the enclosure the fan heater CR 030 is recommended.

Technical Data

Heating element	high performance cartridge
Temperature safety cut-out	to protect against overheating in case of fan failure
Heater body	extruded aluminium profile
Axial fan, ball bearing	airflow 160m³/h, free flow
	service life 50,000h at 25°C (77°F)
Casing	plastic according to UL94 V-0, black
Connection	2-pole max. 2.5mm², clamping screw with strain relief,
	torque 0.8Nm max.
Mounting	clip for 35mm DIN rail, EN 50022 or screw fixing (M6)
Fitting position	horizontal
Operating /Storage temperature	0 to +60°C (+32 to +140°F) / -45 to +70°C (-49 to +158°F)
Dimensions	182 x 160 x 99mm
Weight	approx. 1.45kg
Protection type / Protection class	IP20 / II (earthed)
Approvals	VDE + UL File No. E234324
Note	other heating capacities from 200W up available on request

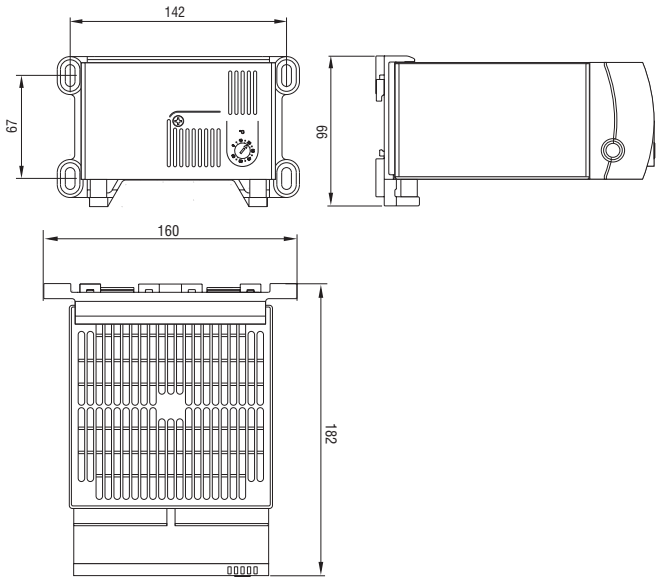

Connection diagram

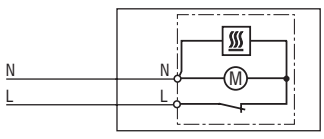

Order No.	Model	Operating voltage	Heating capacity	Setting range
8MR2150-9C	Fan Heater with thermostat	230VAC, 50/60Hz	950W	0 to +60°C
8MR2150-9CA	Fan Heater with hygrostat	230VAC, 50/60Hz	950W	65% RH, factory-set

Filter Fan FF 018 Series — 21m³/h to 102m³/h



- **Very low noise**
- **Minimal depth in enclosure**
- **Functional design**
- **Time-saving installation**
- **Air-channeling**
- **Weather proof and UV resistant**

Filter fans are used to provide an optimum climate in enclosures. The interior temperature of an enclosure can be reduced by channelling cooler filtered outside air into the enclosure thus expelling heated internal air. The resulting air flow prevents formation of localised hot pocket and protects the electronic components from overheating. The plastic used for the hood of this filter fan series is highly weather proof and UV light resistant.

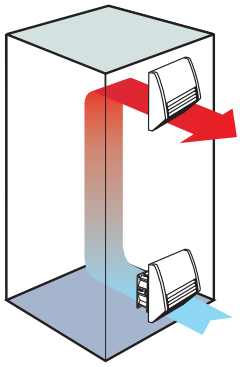

Enclosure air-conditioning using a filter fan and exit filter

Technical Data

Operating voltage	230VAC, 50Hz
Axial fan, ball bearing	service life min. 50,000h at 25°C/77°F (65% RH)
	fan body aluminium, rotor plastic
Connection	2 wires with pressure clamps 2.5mm², length 100mm
Casing (filter fan and exit filter)	Plastic according to UL94 V-0, light grey
Hood (filter fan and exit filter)	Plastic according to UL94 V-0, light grey;
	weather proof and UV light resistant according to UL746C (f1)
Mounting frame	with double industrial adhesive band for fixing to the outside
	of enclosure; certain operating circumstances can make the
	additional use of screws necessary (see drilling template);
	included in the delivery of the filter fans is a template for the
	enclosure cut-out
Filter mat	G4 acc. to DIN EN 779, filtering degree 94%
Filter material	synthetic fibre with progressive construction, temperature
	resistant to 100°C, self-extinguishing class F1;
	moisture resistant to 100% RH, reusable – cleaning by
	washing or vacuuming
Operating / Storage temperature	-45 to +70°C (-49 to +158°F)
Prot. Type / Protection class	IP54* / I (earthed)
Approvals	VDE + UL File No. E234324

*Using fine filter mats type F5 increases the protection type to IP55, but reduces the air volume.

Special features

- The **self-adhesive seal** of the mounting frame prevents dust and water from entering the cabinet.
- **Functional design** of the intake and exit fan hoods very effectively prevents direct intrusion of falling water and dust. The advantage is that the filter mat does not get so quickly contaminated with dirt and thus does not need to be exchanged so often.
- The **air channelling** makes the filter fan particularly quiet in operation.
- Functional and **modern design** enables time-saving assembly and maintenance.
- All filter fan models are also available with **integrated airflow monitor**.
- EMC versions and other voltages on request.

Filter Fan FF 018 Series

Order No.	Air volume, free flow	Air volume with exit filter	Current consumption	Power consumption	Averagenoise level (DIN EN ISO 4871)	Depth in enclosure	Enclosure cut-out	Weight (approx.)
8MR2400-0MA	21m³/h	16m³/h	80mA	13W	31dB (A)	45mm	97 x 97mm + 0.4	0.60kg
8MR2401-0MA	55m³/h	42m³/h	100mA	15W	40dB (A)	58mm	125 x 125mm + 0.4	1.00kg
8MR2402-0MA	102m³/h	68m³/h	100mA	15W	39dB (A)	86mm	176 x 176mm + 0.4	1.30kg

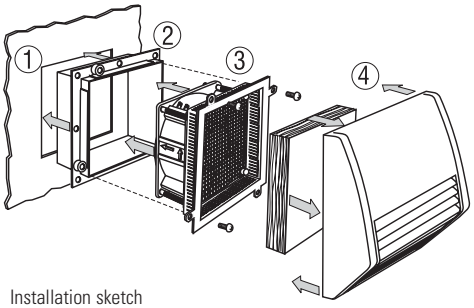

Installation sketch

Time-saving assembly and maintenance

STEGO's filter fans are easily connected and installed **from outside** the cabinet.

1.) Make cut-out in the cabinet wall. The cut edge of the cabinet opening should be free of dirt, filings and grease. A template for the enclosure cut-out is included in the delivery of the filter fan.

2.) Remove protective film from the sealing strips on the mounting frame. Press mounting frame into the cabinet opening. The frame stays permanently in the cabinet.

3.) Electrically connect the axial fan using the clip connectors. Push the unit into the mounting frame. Fix using screws.

4.) Insert the filter mat in the hood. Clip on. Finished.

Cleaning and changing the filter mat is quickly done. To change the filter mat simply remove the filter hood, insert the new mat and snap the hood back again. No tools required. Assembly and maintenance can easily be carried out by one person from outside.

Dimensional Drawing

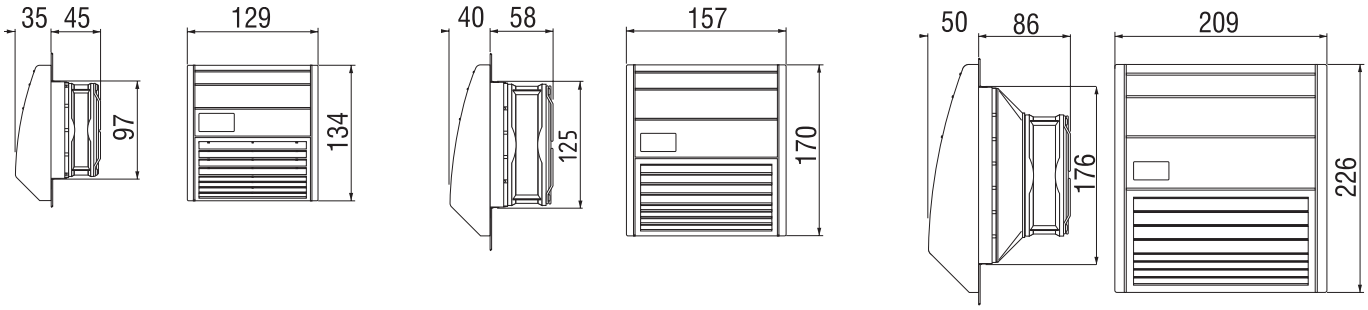

Drilling template for mounting frame

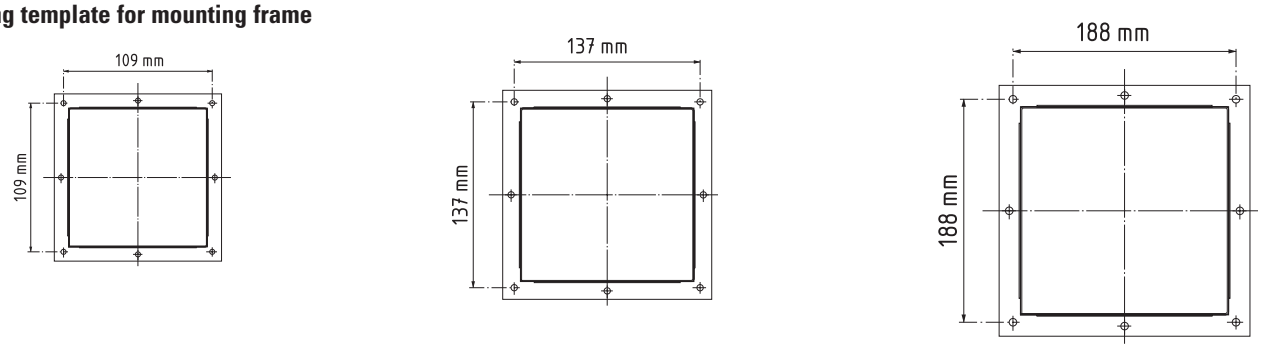

Exit Filter EF 118 Series

Order No.	Depth in enclosure	Enclosure cut-out	Weight (approx.)	Filter mat	Protection type
8MR2400-0AA	16mm	97 x 97mm + 0.4	0.30kg	G4 acc. to DIN EN 779, filtering degree 94%	IP54*
8MR2401-0AA	16mm	125 x 125mm + 0.4	0.40kg	G4 acc. to DIN EN 779, filtering degree 94%	IP54*
8MR2403-0AA	16mm	176 x 176mm + 0.4	0.60kg	G4 acc. to DIN EN 779, filtering degree 94%	IP54*

*Using fine filter mats type F5 increases the protection type to IP55, but reduces the air volume.

Filter Mats FM 086 / FFM 086

Filter mat	89 x 89mm	118 x 118mm	168 x 168mm
G4 (1 packing unit = 3 pcs.)	Order No. 8MR2491-0CA	Order No. 8MR2491-1CA	Order No. 8MR2491-2CA
F5 (1 packing unit = 3 pcs.)	Order No. 8MR2491-0EA	Order No. 8MR2491-1EA	Order No. 8MR2491-2EA

Filter Fan FF 018 Series 200m³/h



- Low maintenance
- High through-flow air volume
- Functional design
- Time-saving installation
- Weather proof and UV resistant

Filter fans are used to provide an optimum climate in enclosures. The interior temperature of an enclosure can be reduced by channelling cooler filtered outside air into the enclosure thus expelling heated internal air. The resulting air flow prevents formation of localised hot pocket and protects the electronic components from overheating. The plastic used for the hood of this filter fan series is highly weather proof and UV light resistant.

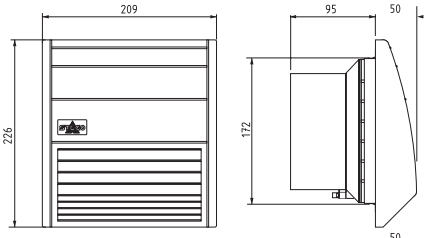

Filter Fan

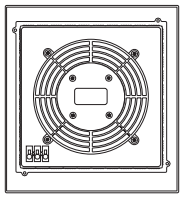
View from rear

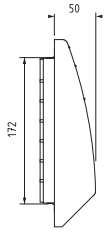

Exit filter

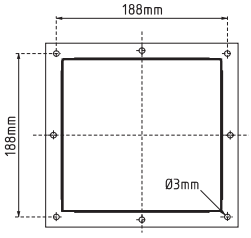

Drilling template for mounting frame

Technical Data

Operating voltage	230VAC, 50Hz
Axial fan, ball bearing	service life min. 50,000h at 25°C/77°F (65% RH)
	fan body aluminium, rotor metal
Connection	3-pole clamp for 2.5mm², clamping torque 0.8Nm max.
Casing (filter fan and exit filter)	Plastic according to UL94 V-0, light grey
Hood (filter fan and exit filter)	Plastic according to UL94 V-0, light grey;
	weather proof and UV light resistant according to UL746C (f1)
Mounting frame	with double industrial adhesive band for fixing to the outside
	of enclosure; certain operating circumstances can make the
	additional use of screws necessary (see drilling template);
	included in the delivery of the filter fans is a template for the
	enclosure cut-out
Filter mat	G4 acc. to DIN EN 779, filtering degree 94%
Filter material	synthetic fibre with progressive construction, temperature
	resistant to 100°C, self-extinguishing class F1;
	moisture resistant to 100% RH, reusable – cleaning by
	washing or vacuuming
Operating / Storage temperature	-45 to +70°C (-49 to +158°F)
Prot. Type / Protection class	IP54* / I (earthed
Approvals	UL File No. E234324

*Using fine filter mats type F5 increases the protection type to IP55, but reduces the air volume.

Filter Fan FF 018 Series

Order No.	Air volume, free flow	Air volume with exit filter	Current consumption	Power consumption	Average noise level (DIN EN ISO 4871)	Depth in enclosure	Enclosure cut-out	Weight (approx.)
8MR2403-0MA	200m³/h	125m³/h	320mA	45W	52dB (A)	95mm	176 x 176mm + 0.4	1.70kg

Exit Filter EF 118 Series

Order No.	Depth in enclosure	Enclosure cut-out	Weight (approx.)	Filter mat	Protection type
8MR2403-0AA	16mm	176 x 176mm + 0.4	0.60kg	G4 acc. to DIN EN 779, filtering degree 94%	IP54*

*Using fine filter mats type F5 increases the protection type to IP55, but reduces the air volume.

Filter Mats FM 086 / FFM 086

Filter mat	168 x 168mm
G4 (1 packing unit = 3 pcs.)	Order No. 8MR2491-2CA
F5 (1 packing unit = 3 pcs.)	Order No. 8MR2491-2EA

Filter Fan FF 018 Series 300m³/h



- **Very low noise**
- **Minimal depth in enclosure**
- **High through-flow air volume**
- **Uniform air circulation**
- **High reliability**
- **Weather proof and UV resistant**

Filter fans are used to provide an optimum climate in enclosures. The interior temperature of an enclosure can be reduced by channelling cooler filtered outside air into the enclosure thus expelling heated internal air. The resulting air flow prevents formation of localised hot pocket and protects the electronic components from overheating. **Four integrated axial fans** provide a particularly high and uniform air circulation thus contributing to higher reliability. The plastic used for the hood of this filter fan series is highly weather proof and UV light resistant.

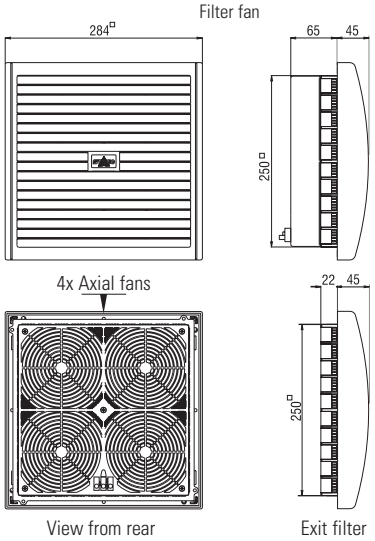

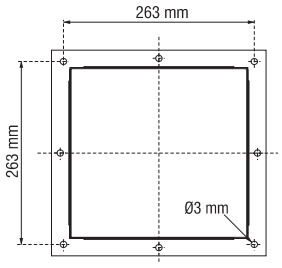

Drilling template for mounting frame

Technical Data

Operating voltage	230VAC, 50Hz
Axial fan, ball bearing	service life min. 50,000h at 25°C/77°F (65% RH)
	fan body aluminium, rotor plastic
Connection	3-pole clamp for 2.5mm², clamping torque 0.8Nm max.
Casing (filter fan and exit filter)	Plastic according to UL94 V-0, light grey
Hood (filter fan and exit filter)	Plastic according to UL94 V-0, light grey;
	weather proof and UV light resistant according to UL746C (f1)
Mounting frame	with double industrial adhesive band for fixing to the outside
	of enclosure; certain operating circumstances can make the
	additional use of screws necessary (see drilling template);
	included in the delivery of the filter fans is a template for the
	enclosure cut-out
Filter mat	G4 acc. to DIN EN 779, filtering degree 94%
Filter material	synthetic fibre with progressive construction, temperature
	resistant to 100°C, self-extinguishing class F1;
	moisture resistant to 100% RH, reusable – cleaning by
	washing or vacuuming
Operating / Storage temperature	-45 to +70°C (-49 to +158°F)
Prot. Type / Protection class	IP54* / I (earthed)
Approvals	UL File No. E234324

*Using fine filter mats type F5 increases the protection type to IP55, but reduces the air volume.

Filter Fan FF 018 Series

Order No.	Air volume, free flow	Air volume with exit filter	Current consumption	Power consumption	Average noise level (DIN EN ISO 4871)	Depth in enclosure	Enclosure cut-out	Weight (approx.)
8MR2404-0MA	300m³/h	230m³/h	400 mA	60W	53dB (A)	65mm	250 x 250mm + 0.4	3.30kg

Exit Filter EF 118 Series

Order No.	Depth in enclosure	Enclosure cut-out	Weight (approx.)	Filter mat	Protection type
8MR2404-0AA	22mm	250 x 250mm + 0.4	1.00kg	G4 acc. to DIN EN 779, filtering degree 94%	IP54*

*Using fine filter mats type F5 increases the protection type to IP55, but reduces the air volume.

Filter Mats FM 086 / FFM 086

Filter mat	247 x 247mm
G4 (1 packing unit = 3 pcs.)	Order No. 8MR2491-3CA
F5 (1 packing unit = 3 pcs.)	Order No. 8MR2491-3EA

Filter Fan FF 018 Series 550m³/h



- **High through-flow air volume**
- **Functional design**
- **Time-saving installation**
- **Weather proof and UV resistant**

Filter fans are used to provide an optimum climate in enclosures. The interior temperature of an enclosure can be reduced by channelling cooler filtered outside air into the enclosure thus expelling heated internal air. The resulting air flow prevents formation of localised hot pocket and protects the electronic components from overheating. The high-performance axial fan provides high air circulation. The plastic used for the hood of this filter fan series is highly weather proof and UV light resistant.

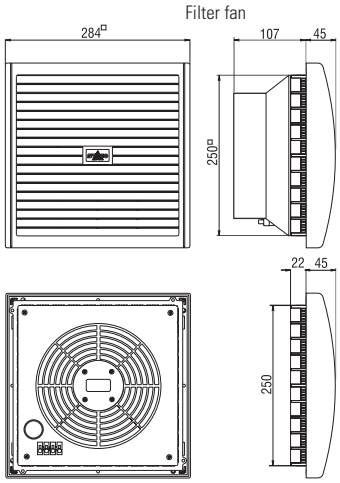

View from rear

Exit filter

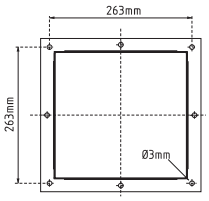

Drilling template
for mounting frame

Technical Data

Operating voltage	230VAC, 50Hz
Axial fan, ball bearing	service life min. 50,000h at 25°C/77°F (65% RH)
	fan body aluminium, rotor metal
Connection	3-pole clamp for 2.5mm², clamping torque 0.8Nm max.
Casing (filter fan and exit filter)	Plastic according to UL94 V-0, light grey
Hood (filter fan and exit filter)	Plastic according to UL94 V-0, light grey;
	weather proof and UV light resistant according to UL746C (f1)
Mounting frame	with double industrial adhesive band for fixing to the outside
	of enclosure; certain operating circumstances can make the
	additional use of screws necessary (see drilling template);
	included in the delivery of the filter fans is a template for the
	enclosure cut-out
Filter mat	G4 acc. to DIN EN 779, filtering degree 94%
Filter material	synthetic fibre with progressive construction, temperature
	resistant to 100°C, self-extinguishing class F1;
	moisture resistant to 100% RH, reusable – cleaning by
	washing or vacuuming
Operating / Storage temperature	-45 to +70°C (-49 to +158°F)
Prot. Type / Protection class	IP54* / I (earthed
Approvals	UL File No. E234324

*Using fine filter mats type F5 increases the protection type to IP55, but reduces the air volume.

Filter Fan FF 018 Series

Order No.	Air volume, free flow	Air volume with exit filter	Current consumption	Power consumption	Average noise level (DIN EN ISO 4871)	Depth in enclosure	Enclosure cut-out	Weight (approx.)
8MR2405-0MA	550m³/h	300m³/h	300mA	64W	65dB (A)	107mm	250 x 250mm + 0.4	2.70kg

Exit Filter EF 118 Series

Order No.	Depth in enclosure	Enclosure cut-out	Weight (approx.)	Filter mat	Protection type
8MR2404-0AA	22mm	250 x 250mm + 0.4	1.00kg	G4 acc. to DIN EN 779, filtering degree 94%	IP54*

*Using fine filter mats type F5 increases the protection type to IP55, but reduces the air volume.

Filter Mats FM 086 / FFM 086

Filter mat	247 x 247mm
G4 (1 packing unit = 3 pcs.)	Order No. 8MR2491-3CA
F5 (1 packing unit = 3 pcs.)	Order No. 8MR2491-3EA



Filter changeable from outside
Safe, lockable
Impact resistant
Weather proof and UV resistant

The outdoor filter fan can be used in outdoor enclosures where warm air has to be dissipated on account of increased thermic development. To clean and exchange the filter mat, it is only necessary to open the lockable door of the outdoor hood. A protection type of IP55 is achieved due to the special design of the hood and the use of fine filter mats. The plastic casing is impact resistant, highly weather proof and resistant to UV light.

Outdoor Filter Fan

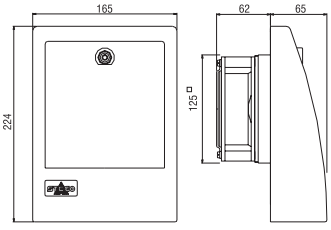

View from rear

Outdoor Exit filter

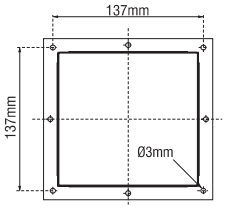

Drilling template for mounting frame

Technical Data

Operating voltage	230VAC, 50Hz
Axial fan, ball bearing	service life min. 50,000h at 25°C/77°F (65% RH)
	fan body aluminium, rotor plastic
Connection	2 wires with pressure clamps 2.5mm², length 100mm
Filter fan and exit filter casing	casing material high impact plastic ASA, light grey
	burning behaviour according to UL94 H-B;
	high resistance to weather and UV
Mounting frame	with double industrial adhesive band for fixing to the outside
	of enclosure; certain operating circumstances can make the
	additional use of screws necessary (see drilling template);
	included in the delivery of the filter fans is a template for the
	enclosure cut-out.
Filter mat	F5 acc. to DIN EN 779, filtering degree 98%
Filter material	synthetic fibre with progressive construction, temperature
	resistant to 100°C, self-extinguishing class F1;
	moisture resistant to 100% RH
Operating / Storage temperature	-45 to +70°C (-49 to +158°F)
Protection type	IP55
Protection class	I (earthed)
Approvals	UL File No. E234324

The hood is fixed permanently to the enclosure from the inside using screws. Filter mats can be easily changed from outside the enclosure through the lockable door in the hood.

Outdoor Filter Fan FF 018 Series

Order No.	Air volume, free flow	Current consumption	Power consumption	Average noise level (DIN EN ISO 4871)	Depth in enclosure	Enclosure cut-out	Weight (approx.)
8MR2410-0DA	20m³/h	100mA	15W	40dB (A)	62mm	125 x 125mm + 0.4	1.20kg

Exit Filter EF 118 Series

Order No.	Depth in enclosure	Enclosure cut-out	Weight (approx.)	Filter mat	Protection type
8MR2410-0AA	16mm	125 x 125mm + 0.4	0.60kg	F5 acc. to DIN EN 779, filtering degree 98%	IP55

Filter Mats FFM 086

Filter mat	122 x 122 mm
F5 (1 packing unit =3 pcs.)	Order No. 8MR2410-0EA

Roof Filter Fan RFF 018 Series 350m³/h





- **Very low noise**
- **Minimal depth in enclosure**
- **High through-flow air volume**
- **High reliability**
- **Time-saving installation**

Roof filter fans and roof exit filters find use in enclosures, from which warm air has to be diverted due to increased heat development. The ready-to-connect and low-noise roof filter fan, which houses **four axial fans**, is used to expel warm air from within the enclosure which has been generated by the stray power of the components. The roof exit filter provides passive ventilation.

Technical Data

Operating voltage	230VAC, 50Hz
Axial fans, ball bearing	service life 50,000h at 25°C/77°F (65% RH)
	fan body aluminium, rotor plastic
Connection	3-pole clamp for 2.5mm²
Casing	plastic acc. to UL94 V-0/lacquered steel sheet, light grey
Filter mat	G3 acc. to DIN EN 779, filtering degree 85%
Filter material	synthetic fibre with progressive construction, temperature
	resistant to 100°C, self-extinguishing class F1;
	moisture resistant to 100% RH, reusable – cleaning by
	washing or vacuuming
Operating / Storage temperature	-45 to +70°C (-49 to +158°F)
Protection type	IP43 (with filter mat) / IP33 (without filter mat)
Protection class	I (earthed)
Approvals	UL File No. E234324

Important note: For reasons of pressure compensation the roof filter fan must always be operated in combination with another filter fan (e.g. Order No. 8MR2402-0MA) or a passive intake filter (e.g. Order No. 8MR2403-0AA).

Roof Filter Fan

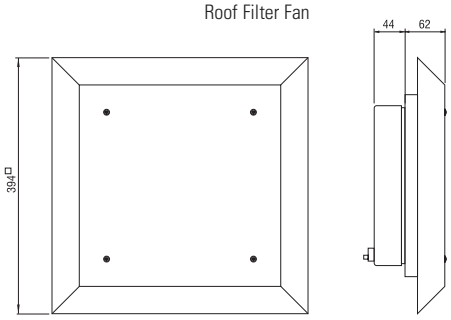

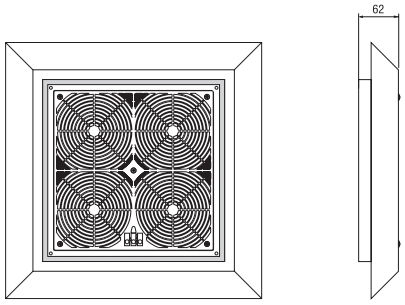

View from below

Roof Exit Filter

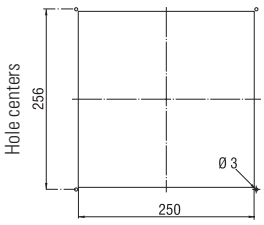

Enclosure cut-out

Roof Filter Fan RFF 018 Series

Order No.	Air volume, free flow	Air volume, free flow	Current consumption	Power consumption	Average noise level (DIN EN ISO 4871)	Depth in enclosure	Enclosure cut-out	Weight (approx.)
8MR2440-1DA	350m³/h (w/ filter mat G3)	500m³/h (w/o filter mat)	400mA	60W	55db (A)	44mm	250 x 250mm + 0.4	4.40kg

Roof Exit Filter REF 118 Series

Order No.	Depth in enclosure	Enclosure cut-out	Weight (approx.)	Filter mat	Protection type
8MR2440-1AA	none	250 x 250mm + 0.4	2.00kg	G3 acc. to DIN EN 779, filtering degree 85%	IP43 (w/ filter mat)

Filter Mats FM 086

Filter mat	282 x 282mm
(1 packing unit = 3 pcs.)	Order No. 8MR2440-1EA

Airflow Monitor LC 013 / LCF 013
for higher reliability



- **Mechanical switch contact**
- **Versatile fields of application**
- **Small size**
- **Easy to connect**

The airflow monitor (NC/NO) is designed to indicate the loss of air movement of a fan or filter fan. The contact detects the loss of air movement caused by fan failure or blocked filter media regardless of direction of air. Its simple mechanical operation makes it a viable alternative to electronic monitoring systems.

Application:
The LC 013 is used as a signal contact to monitor fans or filter fans in stationary, self-contained Protection Class I enclosures. It can be connected to monitoring systems with remote control or can directly switch alarm devices, such as LED's or signal lamps. Loads with capacities exceeding the indicated switching capacity must be switched via a relay, e.g. our electronic relay SM 010. The airflow monitor with NC contact closes upon loss of air movement, i.e. it indicates fan failure (e.g. red signal lamp). The NO contact closes when fan is in operation and serves as optical function display (e.g. green signal lamp).

Airflow monitor integrated in protective grille

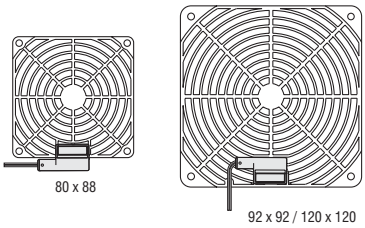

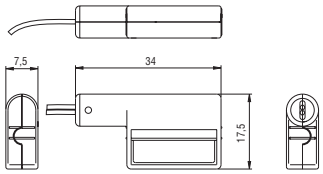

Technical Data

Contact type	reed / magnet contact
Normally Closed (NC)	switch contact open when air is flowing
Normally Open (NO)	switch contact closed when air is flowing
Max. switching capacity	10W (resistive load)
Max. switching voltage	NC: 240VDC (UL), 240V AC/DC (VDE) / NO: 60VDC
Max. switching current	NC: DC 500mA / NO: DC 170mA
Switching threshold of airflow velocity	> 2.5m/s (hysteresis: > 1m/s)
Max. airflow velocity	50m/s
Contact resistance	< 370mΩ (with wire)
Max. air humidity	70% RH (not precipitating)
Service life	> 100,000 cycles
Connection	2 x single strand AWG 26, length 500 mm, tip of stranded
	wire 5mm stripped and tinned (NC: black, NO: blue)
Mounting	alternatively integrated in protective grille (see table),
	mounting clamp or mounting clip
Casing	plastic according to UL94-HB, black
Fitting position	bidirectional tab perpendicular to airflow
Operating / Storage temperature	-20 to +50°C (-4 to +122°F) / -20 to +80°C (-4 to +176°F)
Protection type	IP20
Approvals	VDE + UL File No. E250507

Note: The product of switching voltage and switching current must not exceed 10W. The max. voltage and max. current must not be exceeded, not even short-term (voltage/current peaks). The resulting voltage and current peaks of inductive or capacitive loads must be restricted by a contact protection circuit.

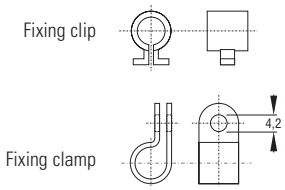

Connection example

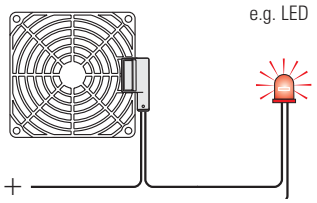

Installation notes:
1. The airflow monitor must not be installed in the impact range of permanent magnets or ferrous metals as the built-in permanent magnet will move unintentionally and consequently can not move in dependence with the air flow.
2. A suitable distance from electromagnetic fields, e.g. generated by transformers, motors, etc., must be maintained as otherwise the contact may switch incorrectly with the frequency of the power supply. Interferences must be checked with an oscillograph and the mounting position of the airflow monitor should be adjusted if necessary.
3. Avoid installing the airflow monitors in areas where air pockets or turbulence can be expected.
4. Ambient air with a high dust content should be avoided.

As there are many different conditions of use, suitability of this product must be assessed by the end user in its final application.

Description	Order No. (NC)	Order No. (NO)	Dimensions	Weight (approx.)
Airflow monitor with mounting clamp and mounting clip LC 013	8MR2191-1A	8MR2191-1B	34 x 17.5 x 7.5mm	5g
Airflow monitor integrated in protective grille (plastic) LCF 013	8MR2191-2A	8MR2191-2B	80 x 88 x 10.5mm	20g
	8MR2191-3A	8MR2191-3B	92 x 92 x 10mm	20g
	8MR2191-4A	8MR2191-4B	120 x 120 x 10mm	30g

Small, compact Thermostat KTO 011 / KTS 011



Large setting range
Small size
Simple to mount
High switching performance

KTO 011: Thermostat (normally closed); contact breaker for regulating heaters.

KTS 011: Thermostat (normally open); contact maker for regulating of filter fans and heat exchangers or for switching signal devised when temperature limit has been exceeded.

CE

Technical Data

Switch temperature difference	7K (± 4K tolerance)
Sensor element	thermostatic bimetal
Contact type	snap-action contact
Contact resistance	< 10mΩ
Service life	> 100,000 cycles
Max. Switching capacity	250VAC, 10 (2) A
	120VAC, 15 (2) A
	DC 30W
EMC	acc. to EN 55014-1-2, EN 61000-3-2, EN 61000-3-3
Connection	2-pole terminal, clamping torque 0.5Nm max.:
	rigid wire 2.5mm²
	stranded wire (with wire end ferrule) 1.5mm²
Mounting	clip for 35mm DIN rail, EN50022
	(or for exit filter EF 118 Series)
Casing	plastic according to UL94 V-0, light grey
Dimensions	60 x 33 x 43mm
Weight	approx. 40g
Fitting position	variable
Operating / Storage temperature	-20 to +80°C (-4 to +176°F) / -45 to +80°C (-49 to +176°F)
Protection type	IP20

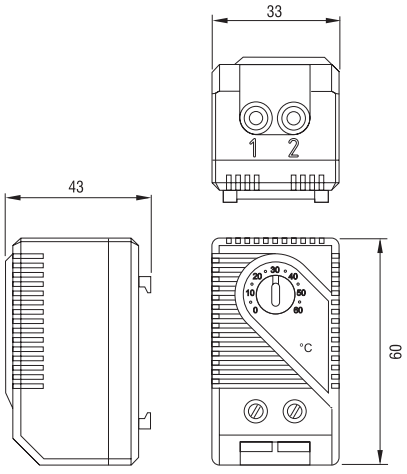

Thermostat KTO 011 (NC)

Thermostat KTS 011 (NO)

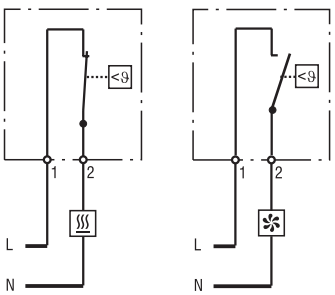

Example of connection

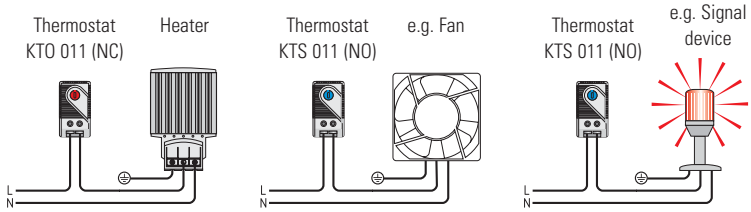

Example of connection

Setting range	Order No. Contact Breaker (NC)	Order No. Contact Maker (NO)	Approvals
0 to +60°C	8MR2170-1BA	8MR2170-1BB	VDE
-10 to +50°C	8MR2170-1CA	8MR2170-1CB	VDE
+20 to +80°C	8MR2170-1DA	8MR2170-1DB	VDE
0 to +60°C	8MR2170-2BA	8MR2170-2BB	UL File No. E164102

Tamperproof Thermostats (Pre-set) FTO 011 / FTS 011

Small size
Default temperature settings
Easy to install
High switching tolerance



Tamperproof Thermostat (Pre-set) FTO 011:
Contact breaker / NC (red casing) for regulating heaters or for switching signal devices when temperature has fallen below the minimum value. The contact opens when temperature is rising.
Tamperproof Thermostat (Pre-set) FTS 011:
Contact maker / NO (blue casing) for regulating filter fans, heat exchangers, cooling devices or for switching signal devices when temperature limit has been exceeded. The contact closes when temperaure is rising.

CE

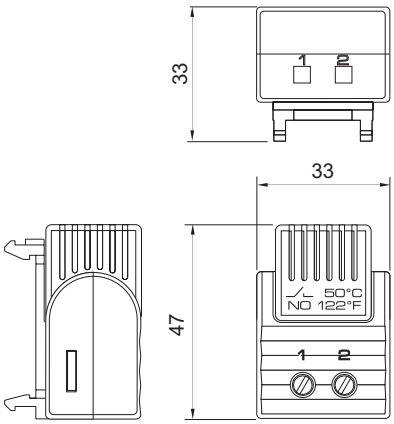

Technical Data

Sensor element	thermostatic bimetal
Contact type	snap-action contact
Contact resistance	< 20mΩ
Service life	> 100,000 cycles
Max. switching capacity	240V AC, 5 (1.6)A
	DC 30W
Max. inrush current	AC 10A
EMC	acc. to EN 55014-1-2, EN 61000-3-2, EN 61000-3-3
Connection	2-pole terminal for 2.5mm², torque 0.8Nm max.
Mounting	clip for 35mm DIN rail, EN 50022
Casing	plastic according to UL94 V-0, light grey
Dimensions	47 x 33 x 33mm
Weight	approx. 23g
Fitting position	variable
Operating/Storage temperaure	-20 to +80°C (-4 to +176°F) / -45 to +80°C (-49 to +176°F)
Prot. type	IP20
Approvals	VDE and UL intended

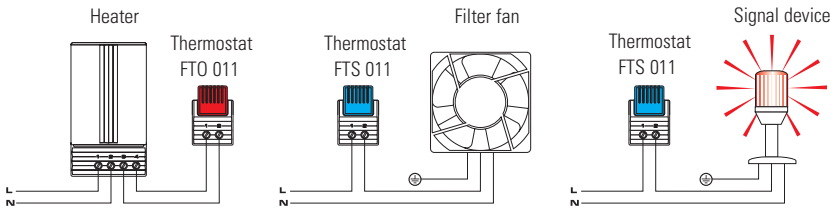

Example of connection

Order No.	Contact	Switch-off temperature	Switch-on temperature
8MR2171-1BA	Contact breaker (NC)	15°C / 59°F (± 3K tolerance)	5°C / 41°F (± 3K tolerance)
8MR2171-2BA	Contact breaker (NC)	25°C / 77°F (± 3K tolerance)	15°C / 59°F (± 3K tolerance)
		Switch-on temperature	**Switch-off temperature**
8MR2171-1BB	Contact maker (NO)	50°C / 122°F (± 4K tolerance)	40°C / 104°F (± 5K tolerance)
8MR2171-2BB	Contact maker (NO)	60°C / 140°F (± 4K tolerance)	50°C / 122°F (± 5K tolerance)
on request	Contact maker (NO)	35°C / 95°F (± 4K tolerance)	25°C / 77°F (± 5K tolerance)

Dual Thermostat ZR 011



- **NO and NC in one casing**
- **Separate adjustable temperatures**
- **High switching capacity**
- **Terminals easily accessible**
- **Clip fixing**

Two thermostats in one casing:
Thermostat (contact breaker, normally closed) for regulating heaters.
Thermostat (contact maker, normally open) for regulating filter fans and heat exchangers or switching signal devices when temperature limit has been exceeded.

Heaters and cooling equipment can be switched independently from each other with a temperature offset as opposed to the usual change-over contacts.

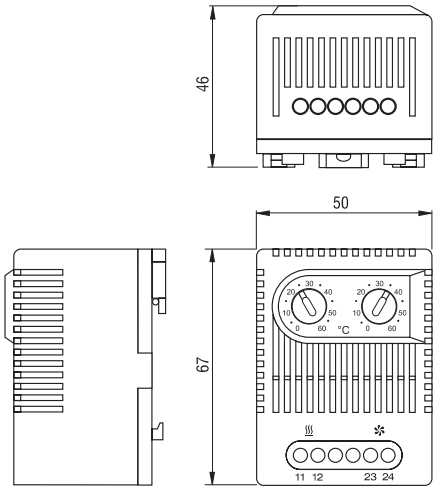

Technical Data

Switch temperature difference	7K (± 4K tolerance)
Sensor element	thermostatic bimetal
Contact type	snap-action contact
Contact resistance	< 10mΩ
Service life	> 100,000 cycles
Max. Switching capacity	250VAC, 10 (2) A
	120VAC, 10 (2) A
	DC 30W
EMC	acc. to EN 55014-1-2, EN 61000-3-2, EN 61000-3-3
Connection	4-pole terminal, clamping torque 0.5Nm max.:
	rigid wire 2.5mm²
	stranded wire (with wire end ferrule) 1.5mm²
Mounting	clip for 35mm DIN rail, EN50022
Casing	plastic according to UL94 V-0, light grey
Dimensions	67 x 50 x 46mm
Weight	approx. 90g
Fitting position	variable
Operating / Storage temperature	-20 to +80°C (-4 to +176°F) / -45 to +80°C (-49 to +176°F)
Protection type	IP20
Approvals	UL File No. E164102

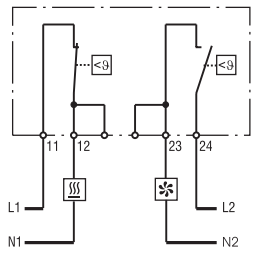

Connection diagram

Heater

Filter fan, Cooling equipment, Signal device

Order No.	Setting Range		Setting Range	
8MR2170-1E	contact breaker, normally closed	0 to +60°C	contact maker, normally open	0 to +60°C
on request	contact breaker, normally closed	+32 to +140°F	contact maker, normally open	+32 to +140°F
on request	contact breaker, normally closed	-10 to +50°C	contact maker, normally open	+20 to +80°C
on request	contact breaker, normally closed	+14 to +122°F	contact maker, normally open	+68 to +176°F
on request*	contact maker, normally open	0 to +60°C	contact maker, normally open	0 to +60°C
on request*	contact maker, normally open	+32 to +140°F	contact maker, normally open	+32 to +140°F

*For regulating heat exchangers and fans (e.g. LE 019) and as an alarm contact for monitoring the interior temperature of electronic enclosures.

Tamperproof Dual Thermostat (Pre-set) FTD 011



NO and NC in one casing
Default temperature settings
High switching accuracy
Clip fixing

Two thermostats in one casing:
Tamperproof (Pre-set) Thermostat/Contact breaker (NC) for regulating heaters or for switching signal devices when temperature has fallen below the minimum value. The contact opens when temperature is rising.
Tamperproof (Pre-set) Thermostat/Contact maker (NO) for regulating filter fans, heat exchangers or for switching signal devices when temperature limit has been exceeded. The contact closes when temperature is rising.

Heaters and cooling equipment can be switched independently from each other with a temperature offset as opposed to the usual change-over contacts.

CE

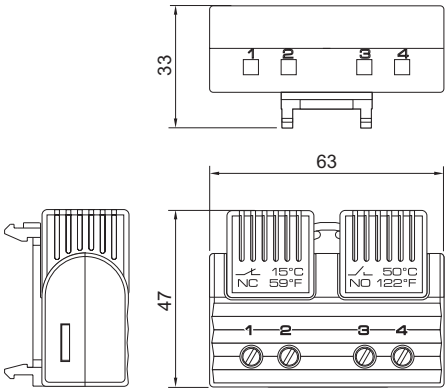

Technical Data

Sensor element	thermostatic bimetal
Contact type	snap-action contact
Contact resistance	< 20mΩ
Service life	> 100,000 cycles
Max. switching capacity	240V AC, 5 (1.6)A
	DC 30W
Max. inrush current	AC 10A
EMC	acc. to EN 55014-1-2, EN 61000-3-2, EN 61000-3-3
Connection	4-pole terminal for 2.5mm², torque 0.8Nm max.
Mounting	clip for 35mm DIN rail, EN 50022
Casing	plastic according to UL94 V-0, light grey
Dimensions	47 x 63 x 33mm
Weight	approx. 40g
Fitting position	variable
Operating/Storage temperaure	-20 to + 80°C (-4 to +176°F) / -45 to + 80°C (-49 to +176°F)
Prot. type	IP20
Approvals	VDE and UL intended

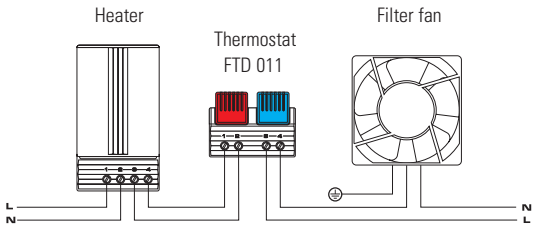

Example of connection

Order No.	Contact breaker (NC)		Contact maker (NO)	
	Switch-off temperature	Switch-on temperature	Switch-on temperature	Switch-off temperature
8MR2172-1A	15°C / 59°F (± 3K tolerance)	5°C / 41°F (± 3K tolerance)	50°C / 122°F (± 4K tolerance)	40°C / 104°F (± 5K tolerance)
8MR2172-2A	25°C / 77°F (± 3K tolerance)	15°C / 59°F (± 3K tolerance)	60°C / 140°F (± 4K tolerance)	50°C / 122°F (± 5K tolerance)

Order No.	Contact maker (NO)		Contact maker (NO)	
	Switch-on temperature	Switch-off temperature	Switch-on temperature	Switch-off temperature
8MR2172-1AB	50°C / 122°F (± 4K tolerance)	40°C / 104°F (± 5K tolerance)	60°C / 140°F (± 4K tolerance)	50°C / 122°F (± 5K tolerance)

Mechanical Thermostat FZK 011



- **Adjustable temperature**
- **High switching capacity**
- **Small hysteresis**
- **Terminals easily accessible**
- **Clip fixing**
- **Change-over contact**

The mechanical thermostat is used for controlling heating and cooling equipment, filter fans or signal devices. The thermostat registers the surrounding air and can switch both inductive and resistive loads via snap-action contact.

CE

Technical Data

Switch temperature difference	4K (± 1.5K tolerance)*
Sensor element	thermostatic bimetal
Contact type	change-over snap-action contact
Contact resistance	< 10mΩ
Service life	> 100,000 cycles
Max. Switching capacity, NC	250VAC, 10 (4) A
	DC 30W
Max. Switching capacity, NO	250VAC, 5 (2) A
	DC 30W
EMC	acc. to EN 55014-1-2, EN 61000-3-2, EN 61000-3-3
Connection	4-pole terminal, clamping torque 0.5Nm max.:
	rigid wire 2.5mm²
	stranded wire (with wire end ferrule) 1.5mm²
Mounting	clip for 35mm DIN rail, EN50022
Casing	plastic according to UL94 V-0, light grey
Dimensions	67 x 50 x 38mm
Weight	approx. 0.10kg
Fitting position	variable
Operating / Storage temperature	-20 to +80°C (-4 to +176°F) / -45 to +80°C (-49 to +176°F)
Protection type	IP20
Approvals	-
Note	Operating voltage 120VAC with setting range in °F on request

*Connecting terminal "N" (RF heating resistor) causes the thermal feedback to work and so reduces the switch temperature difference to approx. 0.5K.

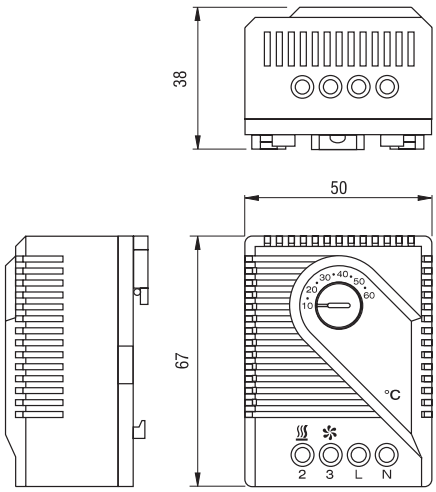

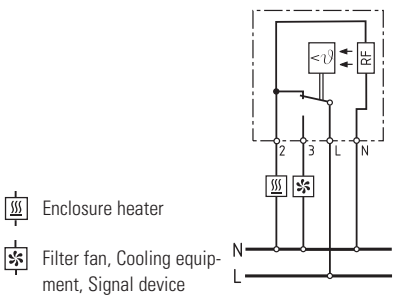

Connection diagram

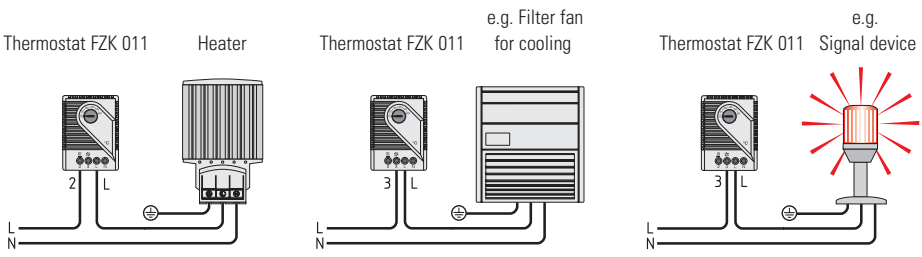

Examples of connection

Order No.	Operating voltage*	Setting range
8MR2170-1A	230VAC	+ 5 to +60°C
8MR2170-1B	230VAC	-20 to +30°C



- **High DC breaking capacity**
- **Low hysteresis**
- **Adjustable temperature**
- **Change-over contact**
- **Clip fixing**

Electronic thermostat for regulating high performance DC 24V equipment. Heating or cooling appliances as well as signal devices can be switched via the potential free change-over contact. In comparison to mechanical thermostats, the ET 011 has a low hysteresis making the switching point and setting accuracy more precise.

CE

Technical Data

Switch temperature difference	approx. 3K
Sensor element	PTC
Contact type	change-over
Contact resistance	< 10mΩ
Service life	> 100,000 cycles
Max. switching capacity	28VDC, 16A
EMC	acc. to EN 55014-1-2, EN 61000-3-2, EN 61000-3-3
Connection	5-pole terminal, clamping torque 0.5Nm max.:
	rigid wire 2.5mm²
	stranded wire (with wire end ferrule) 1.5mm²
Mounting	clip for 35mm DIN rail, EN 50022
Casing	plastic according to UL94 V-0, light grey
Dimensions	67 x 50 x 46mm
Weight	approx. 80g
Fitting position	vertical
Operating / Storage temperature	0 to +60°C (32 to +140°F) / -45 to +80°C (-49 to +176°F)
Protection type	IP20
Approvals	VDE and UL intended

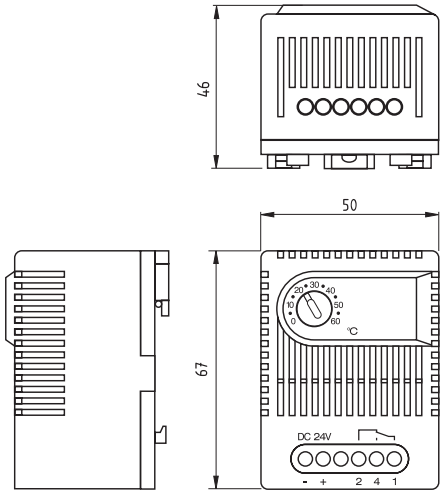

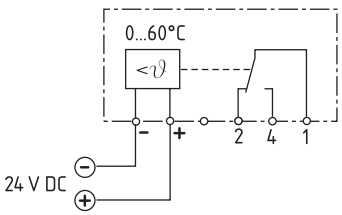

Connection diagram

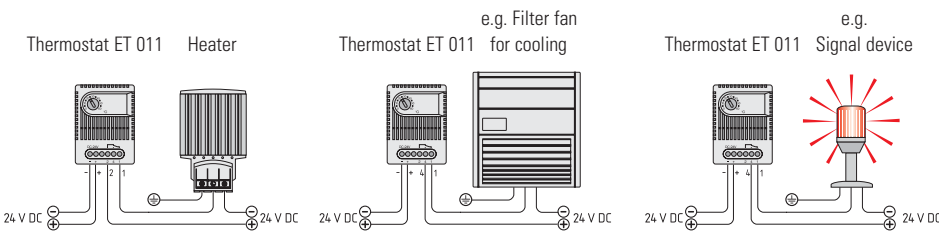

Examples of connection

Order No.	Operating voltage	Setting range
8MR2170-2A	24VDC (20-28VDC)	0 to +60°C

Electronic Relay SM 010 (24VDC + 48VDC)



- **High DC switching capacity**
- **Variety of applications**
- **Compact design**
- **Simple connection**
- **Clip fixing**

Electronic relay for switching DC appliances with high switching capacity. A separate conventional switch contact is used as controller (e.g. temperature regulator, humidity regulator). The electronic relay is available in 24VDC and 48VDC versions.

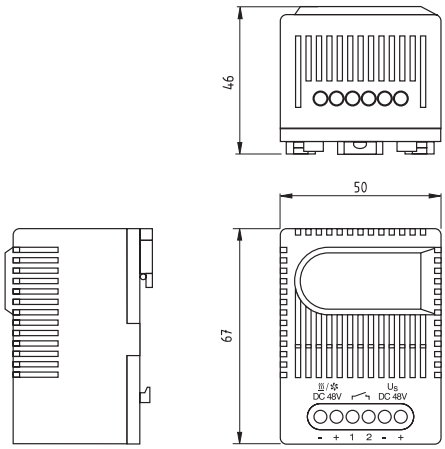

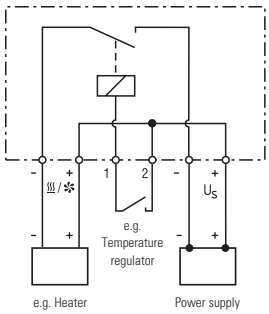

CE

Technical Data

Contact type	contact maker, normally open (Relay/MOSFET)
Contact resistance	< 10mΩ
Service life	> 100,000 cycles
EMC	acc. to EN 55014-1-2, EN 61000-3-2, EN 61000-3-3
Connection	6-pole terminal, clamping torque 0.5Nm max.:
	rigid wire 2.5mm²
	stranded wire (with wire end ferrule) 1.5mm²
Mounting	clip for 35mm DIN rail, EN50022
Casing	plastic according to UL94 V-0, light grey
Dimensions	67 x 50 x 46mm
Weight	approx. 85g
Fitting position	variable
Operating / Storage temperature	-45 to +70°C (-49 to +158°F)
Protection type	IP20
Approvals	VDE and UL intended

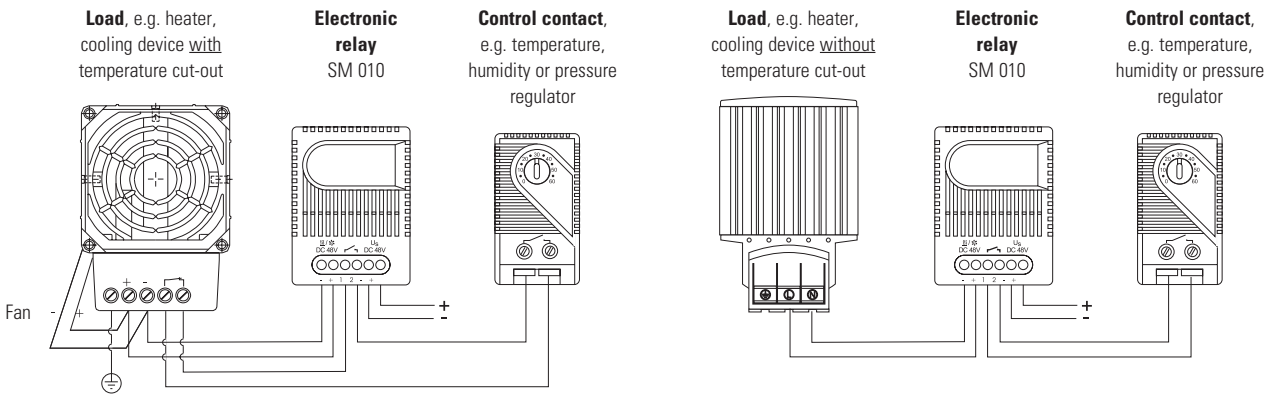

Order No.	Operating voltage	Max. Switching capacity
8MR2180-1A	24VDC (20-28VDC)	28VDC 16A
8MR2180-1B	48VDC (38-56VDC)	56VDC 16A

Mechanical Hygrostat MFR 012



- **Adjustable relative humidity**
- **Change-over contact**
- **High switching capacity**
- **Easily accessible terminals**
- **Clip fixing**

The electromechanical thermostat MRF 012 is designed to control enclosure heaters so that the dew point is raised when a critical relative humidity of 65% is exceeded. In this way condensation and corrosion is effectively prevented.

CE

Technical Data

Switch difference*	4% RH (± 3% tolerance)
permissible air velocity	15m/sec
Contact type	change-over contact
Contact resistance	< 10mΩ
Service life	> 50,000 cycles
Min. Switching capacity	20V AC/DC, 100mA
Max. Switching capacity	250VAC, 5 (0.2) A
	DC 20W
EMC	acc. to EN 55014-1-2, EN 61000-3-2, EN 61000-3-3
Connection	3-pole terminal for 2.5mm², clamping torque 0.5Nm max.:
	rigid wire 2.5mm²
	stranded wire (with wire end ferrule) 1.5mm²
Mounting	clip for 35mm DIN rail, EN50022
Casing	plastic according to UL94 V-0, light grey
Dimensions	67 x 50 x 38mm
Weight	approx. 60g
Fitting position	variable
Operating / Storage temperature	0 to +60°C (+32 to +140°F) / -20 to +80°C (-4 to +176°F)
Protection type	IP20
Approvals	VDE and UL submitted

***at 50% RH**

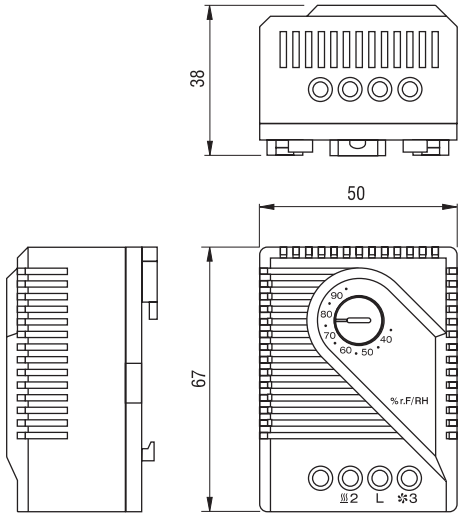

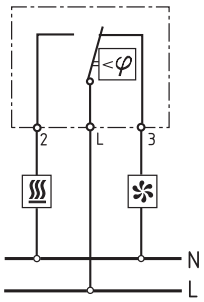

Connection diagram

Order No.	Setting range
8MR2170-1C	35 to 95% RH

Electronic Hygrotherm ETF 012



- **Temperature and humidity adjustable**
- **Optical operating display (LED)**
- **High switching capacity**
- **Clip fixing**

The electronic hygrotherm senses the ambient temperature and relative humidity in an enclosure with electric/electronic components, and turns on a heater (or alternatively, a fan) at either set point, helping prevent the formation of condensation in the enclosure. The LED integrated in the adjustment knob on the active controller is lit when the connected device is in operation..

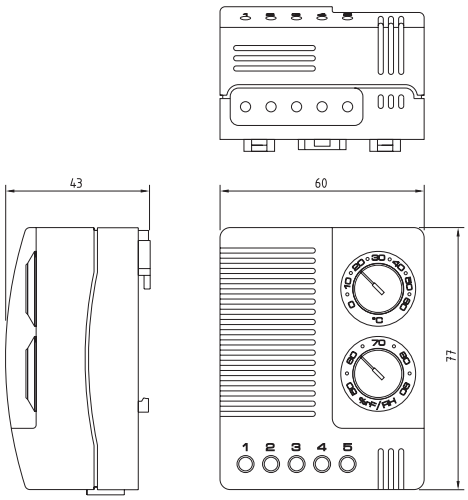

Technical Data

Switch difference (temperature)	2K (± 1K tolerance)
Switch difference (humidity)	4% RH (± 1% tolerance)
Reaction time (humidity)	approx. 5 sec.
Contact type	change-over contact (relay)
Contact resistance	< 10mΩ
Service life	NC: > 50,000 cycles
	NO: > 100,000 cycles
Max. Switching capacity (Relay	NC: 240VAC, 6 (1) A
output)	NO: 240VAC, 8 (1.6) A
	NC: 120VAC, 6 (1) A
	NO: 120VAC, 8 (1.6) A
	24VDC, 4A
EMC	acc. to EN 55014-1-2, EN 61000-3-2, EN 61000-3-3
Optical indicator	LED
Connection	5-pole terminal, clamping torque 0.5Nm max.:
	rigid wire 2.5mm²
	stranded wire (with wire end ferrule) 1.5mm²
Mounting	clip for 35mm DIN rail, EN50022
Casing	plastic according to UL94 V-0, light grey
Dimensions	77 x 60 x 43mm
Weight	approx. 0.20kg
Fitting position	vertical
Operating / Storage temperature	0 to +60°C (+32 to +140°F) / -20 to +80°C (-4 to +176°F)
Protection type	IP20

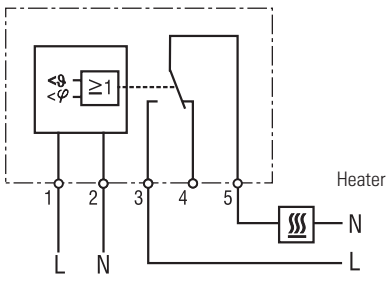

Connection diagram

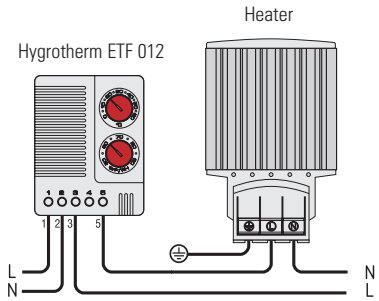

Example of connection

Order No.	Operating voltage	Setting range temperature	Setting range humidity	Approvals
8MR2170-4E	230VAC, 50/60Hz	0 to +60°C	50 to 90% RH	VDE + UL File No. E164102
8MR2170-4F	120VAC, 50/60Hz	+32 to +140°F	50 to 90% RH	UL File No. E164102
8MR2170-4H	120VAC, 50/60Hz	0 to +60°C	50 to 90% RH	UL File No. E164102



Lamp shown with protective plastic cover (see Accessories)

Magnetic or optional DIN rail mounting
Energy-saving lamp
Lamp without/with electrical socket (choice of sockets)
On/Off switch

The compact lamp KL 025 was especially designed for use in enclosures. A powerful magnet enables the lamp to be mounted freely in any desired position in metal enclosures saving time and installation problems. The integrated electrical socket allows the use of additional appliances.

CE VDE

Technical Data

Luminosity	900 Lm
Lamp type	compact fluorescent lamp with integral starter
Service life	5,000 h
Switch	on/off switch for lamp
Connection	3-pole terminal 2.5mm² with cable clamp, torque 0.8Nm max.
Mounting	magnet fixing
Casing	plastic, light grey
Dimensions	355 x 65 x 70mm
Weight	approx. 1.0kg
Fitting position	variable
Operating / Storage temperature	-20 to +50°C (-4 to +122°F) / -45 to +70°C (-49 to +158°F)
Protection type	IP20
Accessories	lamp cover, Order No. 8MC/8MF4908 (see photo)

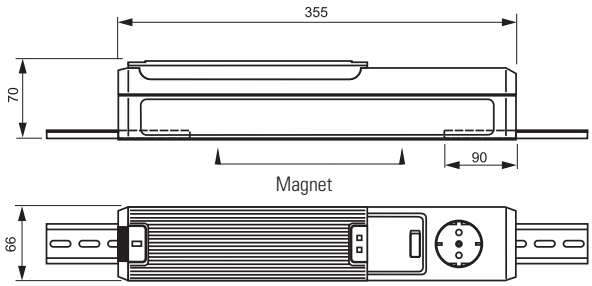

In plastic, aluminium or stainless steel cabinets the lamp can be fixed using screws together with inserted 35mm DIN rail sections.

Order No.	Operating Voltage	Socket	Power consumption	Nominal Current	Protection class	Approvals
8MC/8MF4900	230VAC, 50Hz	Germany	11W (equals 75W light bulb)	16.0A	I (earthed)	VDE
8MC/8MF4901	120VAC, 60Hz	Germany	9W (equals 60W light bulb)	15.0A	I (earthed)	VDE
8MC/8MF4908	Accessorie part: Lamp cover for all KL 025 lamp types (see photo)					

Slimline Lamp SL 025 Series with on/off switch



Photo: Slimline lamp with on/off switch, with integrated electric socket (Germany), Order No. 8MF5900-1A

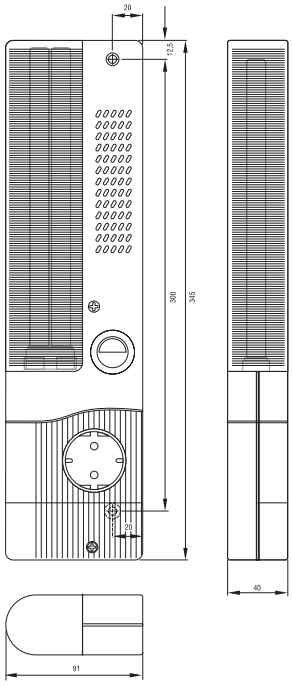

- **Slim casing**
- **Electronic ballast**
- **Lamp without/with electrical socket (choice of sockets)**
- **Magnet fixing (option)**
- **Energy saving lamp**
- **On/Off switch**

The flat slimline lamp SL 025 is suitable for all types of panels and enclosures, especially where space is at a premium. The lamp can be mounted on its narrow or broad surface using screws. It is also available with a magnet which allows it to be fitted quickly in any position in a steel enclosure. Both versions are available with an integrated electrical socket enabling the use of additional appliances.

CE

Technical Data

Power consumption	11W (equals 75W light bulb)
Luminosity	900Lm
Lamp type	energy saving lamp, 2G7 socket
Service life	10,000h
Switch	on/off switch for lamp
Connection	terminal 2.5mm² with cable clamp, torque 0.8Nm max.
Mounting	screw fixing, M5, 300mm centers
	magnet fixing (optional)
Casing	plastic according to UL94 V-0, light grey
Dimensions	345 x 91 x 40mm
Fitting position	narrow surface/broad surface
Operating / Storage temperature	-20 to +50°C (-4 to +122°F) / -45 to +70°C (-49 to +158°F)
Protection type	IP20
Note	The slimline lamp SL 025 is also available with a 19" front
	panel
	24VDC to 48VDC on request

(1) (2) (3) (4) (5)



Order No.	Model	Operating Voltage	Socket	Nominal Current	Weight (approx.)	Protection class	Approvals
8MF5900-1A	without magnet	230VAC, 50/60Hz	Germany (1)	16.0A	0.40kg	I (earthed)	VDE
8MF5900	with magnet	230VAC, 50/60Hz	Germany (1)	16.0A	0.60kg	I (earthed)	VDE
8MF5900-2A	without magnet	230VAC, 50/60Hz	none	-	0.40kg	II (double insulated)	VDE + UL File No. E234324
8MF5900-1B	with magnet	230VAC, 50/60Hz	none	-	0.60kg	II (double insulated)	VDE + UL File No. E234324
on request	without magnet	230VAC, 50/60Hz	France/Poland (2)	16.0A	0.40kg	I (earthed)	VDE
on request	with magnet	230VAC, 50/60Hz	France/Poland (2)	16.0A	0.60kg	I (earthed)	VDE
on request	without magnet	230VAC, 50/60Hz	Switzerland (3)	10.0A	0.40kg	I (earthed)	VDE
on request	with magnet	230VAC, 50/60Hz	Switzerland (3)	10.0A	0.60kg	I (earthed)	VDE
on request	without magnet	230VAC, 50/60Hz	UK/Ireland (4)	13.0A	0.40kg	I (earthed)	VDE
on request	with magnet	230VAC, 50/60Hz	UK/Ireland (4)	13.0A	0.60kg	I (earthed)	VDE
on request	without magnet	120VAC, 50/60Hz	USA/Canada (5)	15.0A	0.40kg	I (earthed)	UL File No. E234324
on request	with magnet	120VAC, 50/60Hz	USA/Canada (5)	15.0A	0.60kg	I (earthed)	UL File No. E234324
on request	without magnet	120VAC, 50/60Hz	none	-	0.40kg	II (double insulated)	UL File No. E234324
on request	with magnet	120VAC, 50/60Hz	none	-	0.60kg	II (double insulated)	UL File No. E234324



Photo: Slimline lamp with movement sensor and with integrated electric socket (Germany), Order No. 8MF5910-1A

- **Slim casing**
- **Electronic ballast**
- **Lamp without/with electrical socket (choice of sockets)**
- **Magnet fixing (option)**
- **Energy saving lamp**
- **Automatic switching**

The flat slimline lamp SL 025 with movement sensor is suitable for all types of panels and enclosures, especially where space is at a premium. The lamp can be mounted on its narrow or broad surface using screws. It is also available with a magnet which allows it to be fitted quickly in any position in a steel enclosure. Both versions are available with an integrated electrical socket enabling the use of additional appliances. The movement sensor substitutes a door contact switch.

CE

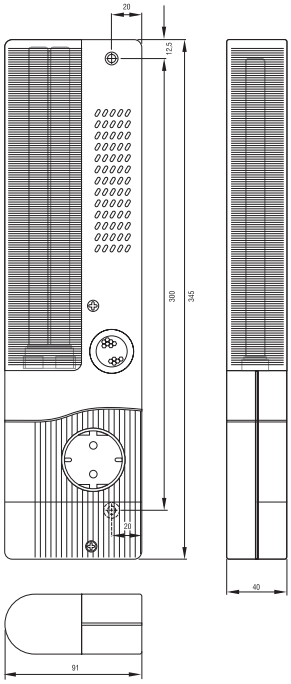

The PIR movement sensor switches the lighting on when the enclosure door is opened. The switch-on time is reset with every further registered movement. The movement sensor does not react to movement on the other side of glass and so can be used in enclosures with glass doors.

Technical Data

Power consumption	11W (equals 75W light bulb)
Luminosity	900Lm
Lamp type	energy saving lamp, 2G7 socket
Service life	10,000h
Switch	PIR movement sensor, approx. 6min. fixed switch-on duration
Connection	terminal 2.5mm² with cable clamp, torque 0.8Nm max.
Mounting	screw fixing, M5, 300mm centers
	magnet fixing (optional)
Casing	plastic according to UL94 V-0, light grey
Dimensions	345 x 91 x 40mm
Fitting position	narrow surface/broad surface
Operating / Storage temperature	-20 to +50°C (-4 to +122°F) / -45 to +70°C (-49 to +158°F)
Protection type	IP20
Note	The slimline lamp SL 025 is also available with a 19" front
	panel
	24VDC to 48VDC on request

(1) (2) (3) (4) (5)



Order No.	Model	Operating Voltage	Socket	Nominal Current	Weight (approx.)	Protection class	Approvals
8MF5910-1A	without magnet	230VAC, 50/60Hz	Germany (1)	16.0A	0.40kg	I (earthed)	VDE
8MF5910	with magnet	230VAC, 50/60Hz	Germany (1)	16.0A	0.60kg	I (earthed)	VDE
8MF5910-2A	without magnet	230VAC, 50/60Hz	none	-	0.40kg	II (double insulated)	VDE + UL File No. E234324
8MF5910-1B	with magnet	230VAC, 50/60Hz	none	-	0.60kg	II (double insulated)	VDE + UL File No. E234324
on request	without magnet	230VAC, 50/60Hz	France/Poland (2)	16.0A	0.40kg	I (earthed)	VDE
on request	with magnet	230VAC, 50/60Hz	France/Poland (2)	16.0A	0.60kg	I (earthed)	VDE
on request	without magnet	230VAC, 50/60Hz	Switzerland (3)	10.0A	0.40kg	I (earthed)	VDE
on request	with magnet	230VAC, 50/60Hz	Switzerland (3)	10.0A	0.60kg	I (earthed)	VDE
on request	without magnet	230VAC, 50/60Hz	UK/Ireland (4)	13.0A	0.40kg	I (earthed)	VDE
on request	with magnet	230VAC, 50/60Hz	UK/Ireland (4)	13.0A	0.60kg	I (earthed)	VDE
on request	without magnet	120VAC, 50/60Hz	USA/Canada (5)	15.0A	0.40kg	I (earthed)	UL File No. E234324
on request	with magnet	120VAC, 50/60Hz	USA/Canada (5)	15.0A	0.60kg	I (earthed)	UL File No. E234324
on request	without magnet	120VAC, 50/60Hz	none	-	0.40kg	II (double insulated)	UL File No. E234324
on request	with magnet	120VAC, 50/60Hz	none	-	0.60kg	II (double insulated)	UL File No. E234324

Dual Lamp DL 026 Series with on/off switch



Versatile – base lamp or hand lamp
Long-life energy saving lamp
Connections for further lamps

Dual lamp with on/off switch (incl. base station)

CE

Technical Data

Luminosity	1000Lm
Lamp type	energy saving lamp, E27 socket
Service life	10,000h
Switch	on/off push switch
Connection	6-pole screw connector 2.5mm² (torque 0.8Nm max.) for power
	connection, further lamps and external door contact switch
Mounting	screw fixing (e.g. 35mm DIN rail)
Casing	plastic according to UL94 V-0, light grey
Weight	approx. 0.60kg
Fitting position	variable
Operating / Storage temperature	-20 to +50°C (-4 to +122°F) / -45 to +70°C (-49 to +158°F)
Protection type / Protection class	IP20 / II (double insulated)
Approvals	-
Note	120VAC and DC voltages on request

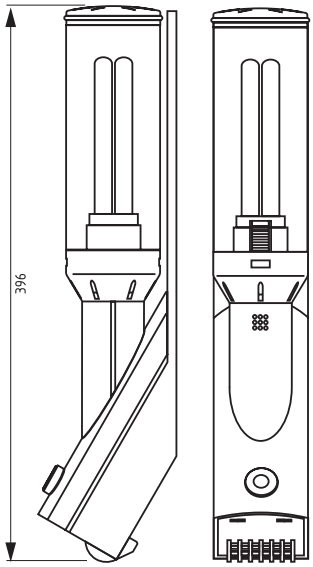

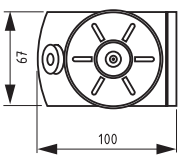



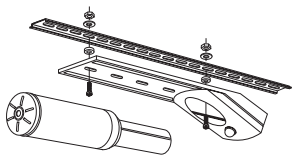

(1)

(1) Standard screw fixing to DIN rail

Order No.	Operating voltage	Power consumption
8MF4905	230VAC, 50Hz	20W (equals 100W light bulb)

Dual Lamp DL 026 Series with movement sensor



- **Versatile – base lamp or hand lamp**
- **Long-life energy saving lamp**
- **Automatic switching**
- **Alternative solution for door switch**
- **Connections for further lamps**

Dual lamp with movement sensor (incl. base station)

CE

Technical Data

Luminosity	1000Lm
Lamp type	energy saving lamp, E27 socket
Service life	10,000h
Switch	PIR movement sensor, approx. 3min. fixed switch-on duration
Connection	4-pole screw connector 2.5mm² (torque 0.8Nm max.) for power connection and further lamps
Mounting	screw fixing (e.g. 35mm DIN rail)
Casing	plastic according to UL94 V-0, light grey
Weight	approx. 0.60kg
Fitting position	variable
Operating / Storage temperature	-20 to +50°C (-4 to +122°F) / -45 to +70°C (-49 to +158°F)
Protection type / Protection class	IP20 / II (double insulated)
Approvals	-
Note	120VAC and DC voltages on request

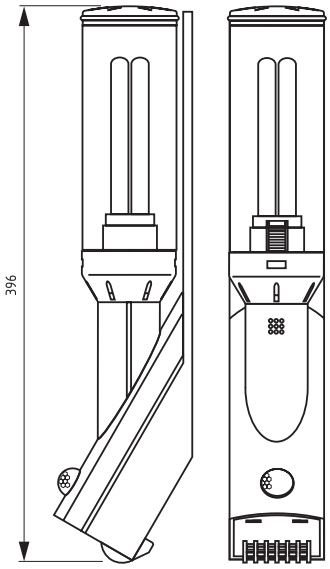

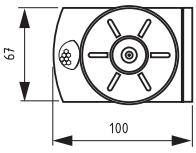

The PIR movement sensor switches the lamp on when the enclosure door is opened. The switch-on time is reset with every further registered movement. The movement sensor does not react to movement on the other side of glass and so can be used in enclosures with glass doors.



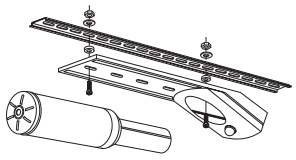

(1)

(1) Standard screw fixing to DIN rail

Order No.	Operating voltage	Power consumption
8MF4902	230VAC, 50Hz	20W (equals 100W light bulb)

Hand Lamp DL 026 Series with lamp holder



Long-life energy saving lamp

Versatile

CE

Technical Data

Luminosity	1000Lm
Lamp type	energy saving lamp, E27 socket
Service life	10,000h
Connection	power cable (2m) with Euro plug
Mounting	screws or fixing plate (self-adhesive)
Casing	plastic according to UL94 V-0, light grey
Weight	approx. 0.60kg
Fitting position	variable
Operating / Storage temperature	-20 to +50°C (-4 to +122°F) / -45 to +70°C (-49 to +158°F)
Protection type / Protection class	IP20 / II (double insulated)
Approvals	-
Included in delivery	lamp holder, hook and fixing plate
Note	120VAC and DC voltages on request

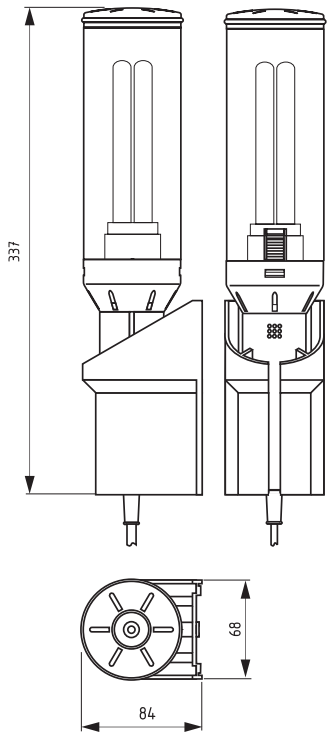



Order No.	Operating voltage	Power consumption
8MF4906	230VAC, 50Hz	20W (equals 100W light bulb)



Quickly connected
Available with or without fuse
Clip fixing



The DIN rail mounted electrical socket can be quickly fitted and connected in enclosures allowing the use of auxiliary products such as hand lamps, measuring devices, soldering irons etc. The unit is available with and without fuse and in many world socket standards.

CE

Technical Data

Connection	3 x pressure clamps for stranded and rigid wire 0.5 - 2.5mm²
Mounting	clip for 35mm DIN rail, EN50022
Casing	plastic according to UL94 V-0, light grey
Dimensions	92 x 62 x 48mm
Weight	approx. 0.20kg
Fitting position	variable
Operating / Storage temperature	-45 to +70°C (-49 to +158°F)
Protection type / Protection class	IP20 / I (earthed)

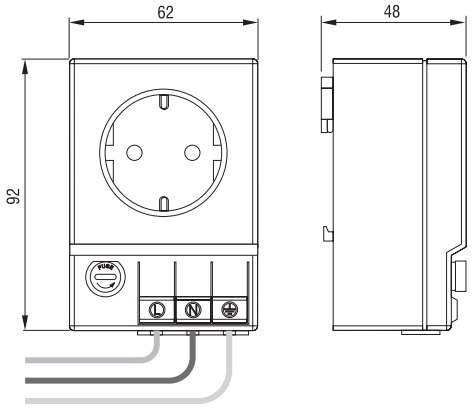

Connections from mains

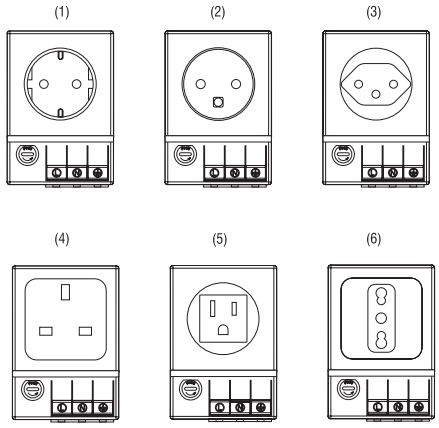

Order No.	Operating Voltage max.	Socket	Model	Nominal Current	Approvals
8MF9300	250VAC	Germany (1)	with fuse*	6.3A	-
8MF9301	250VAC	France/Poland (2)	with fuse*	6.3A	-
8MF9302	250VAC	Switzerland (3)	with fuse*	6.3A	-
8MF9303	250VAC	UK/Ireland (4)	with fuse*	6.3A	-
8MF9304	125VAC	USA/Canada (5)	with fuse*	6.3A	UL File No. E222026
8MF9310	250VAC	Italy (6)	with fuse*	6.3A	-
8MF9305	250VAC	Germany (1))	without fuse	16.0A	-
8MF9306	250VAC	France/Poland (2)	without fuse	16.0A	-
8MF9307	250VAC	Switzerland (3)	without fuse	10.0A	-
8MF9308	250VAC	UK/Ireland (4)	without fuse	13.0A	-
8MF9309	125VAC	USA/Canada (5)	without fuse	15.0A	UL File No. E222026
8MF9311	250VAC	Italy (6)	without fuse	16.0A	-

*fuse Ø 5 x 20mm

Pressure compensation Device DA 084 IP45/IP55





Photo: Inside view

High degree of protection

Easy to install

It has become more and more important to provide a protected enclosure environment for valuable and crucial electrical and electronic components. In a tightly closed enclosure, pressure differentials can occur during extreme temperature variations, such as day/night operation. When this occurs, the risk of dust and humidity being absorbed into the control panel increases dramatically. The specially designed pressure compensation plug DA 084 permits a controlled change in pressure. It can be installed easily in any enclosure. Because of the pressure compensation plug's high degree of protection (IP45), the protection type of the enclosure will not be affected.

CE

Technical Data

Mounting	PG 29 thread with union nut
Material	plastic according to UL94 V-0
Air interface	approx. 7cm²
Dimensions	Ø 65.5 x 30.5mm
Fitting position	variable
Operating / Storage temperature	-45 to +70°C (-49 to +158°F)

Installation

Make cut-out Ø 37^{+1}mm in enclosure wall and mount pressure compensation device with nut. Please make sure that the sealing gasket is put in place on the outer side panel of the enclosure. For optimal pressure compensation we recommend to use two devices on opposite sides towards the top of the enclosure.

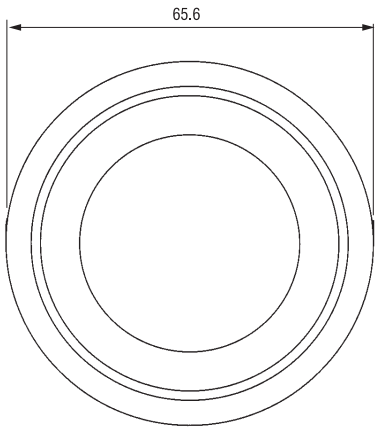

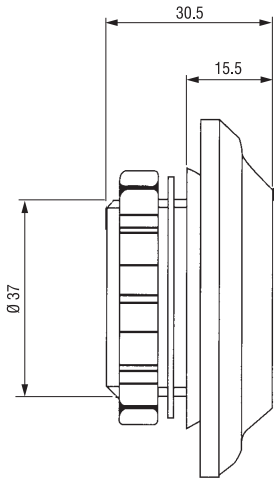

Order No.	Model	Protection type	1 packing unit	Weight (approx.)
8MR2171-1A	without gasket	IP45	2 pieces	62g (31g/piece)
8MR2171-2A	with gasket	IP55	2 pieces	62g (31g/piece)

Pressure compensation Device DA 284 IP66





Photo: Inside view

High degree of protection
Semipermeable membrane
Easy to install

Pressure differentials in enclosures with a high degree of protection with respect to humidity and dust are a result of inside and outside temperature fluctuations. In case of negative pressure or vacuum, dust and humidity can be absorbed through the door seal and can enter the enclosure. As the humidity cannot exit the enclosure condensation may occur. The easy to install pressure compensation device DA 284 provides the compensation of pressure at a protection degree of **IP66**. A semipermeable membrane inside the plug allows air and humidity to leave the enclosure. In the opposite direction, it only allows dry air into the enclosure while humidity and dust from the outside are blocked by the membrane.

CE

Technical Data

Mounting	thread M40 x 1.5 with nut
Depth in enclosure	approx. 16mm
Material	plastic, light grey
Sealing	sealing gasket NBR
Filter	semipermeable membrane
Air permeability	1200l/h at a pressure difference of min. 70mbar
Dimensions	Ø 60 x 37mm
Fitting position	variable
Operating / Storage temperature	-45 to +70°C (-49 to +158°F)

Installation

Make cut-out Ø $40.5^{+0.5}$mm in enclosure wall and mount pressure compensation device with nut. Please make sure that the sealing gasket is put in place on the outer side panel of the enclosure. For optimal pressure compensation we recommend to use two devices on opposite sides towards the top of the enclosure.

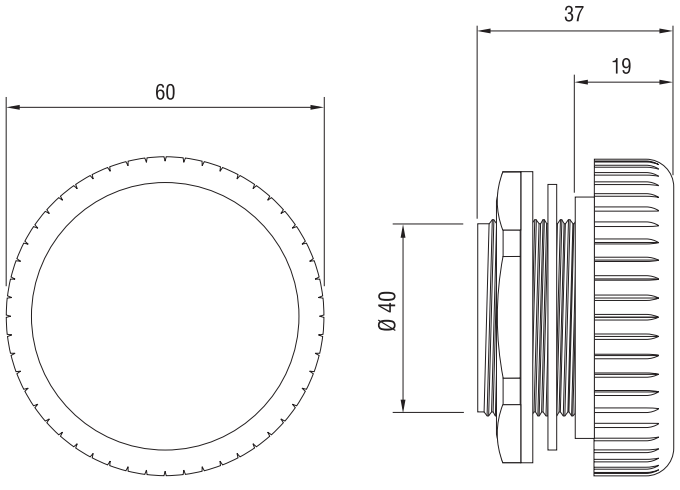

Order No.	Protection type	1 packing unit	Weight (approx.)
8MR2171-2C	IP66 (EN 60529) / IPX9K (EN 40050-9)	2 pieces	90g (45g/piece)
8MR2171-1C	IP66 (EN 60529) / IPX9K (EN 40050-9)	1 piece	45g

Pressure compensation Device DA 284 IP66





Photo: Inside view

High degree of protection
Semipermeable membrane
Corrosion resistant
Food safe

Pressure differentials in enclosures with a high degree of protection with respect to humidity and dust are a result of inside and outside temperature fluctuations. In case of negative pressure or vacuum, dust and humidity can be absorbed through the door seal and can enter the enclosure. As the humidity cannot exit the enclosure condensation may occur. The easy to install pressure compensation device DA 284 provides the compensation of pressure at a protection degree of IP66. A semipermeable membrane inside the plug allows air and humidity to leave the enclosure. In the opposite direction, it only allows dry air into the enclosure while humidity and dust from the outside are blocked by the membrane.

CE

Technical Data

Mounting	thread M40 x 1.5 with nut
Depth in enclosure	approx. 9mm
Material	stainless steel V2A (DIN 1.4404 / AISI 316 L)
Sealing	sealing gasket NBR
Filter	semipermeable membrane
Air permeability	1200l/h at a pressure difference of min. 70mbar
Dimensions	Ø 58 x 31mm
Fitting position	variable
Operating / Storage temperature	-45 to +80°C (-49 to +176°F)

Installation

Make cut-out Ø $40.5^{+0.5}$mm in enclosure wall and mount pressure compensation device with nut. Please make sure that the sealing gasket is put in place on the outer side panel of the enclosure. For optimal pressure compensation we recommend to use two devices on opposite sides towards the top of the enclosure.

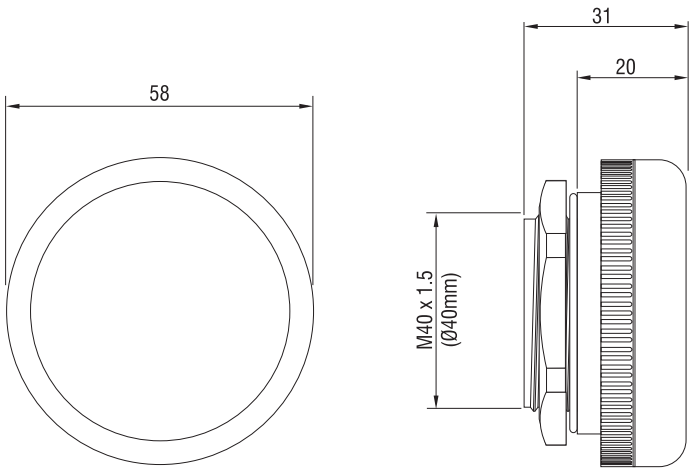

Order No.	Protection type	packing unit	Weight (approx.)
8MR2171-1D	IP66 (EN 60529) / IPX9K (EN 40050-9)	1 piece	160g

Calculation of temperature control in enclosures

What's needed:

1. The dimensions of the enclosure (Height, Width, Depth) **[m]**
2. The enclosure position (eg. single enclosure, enclosure in row) according to calculation formula, enclosure surface area A **[m²]**
3. The enclosure material (metal, plastic) heat transfer coefficient from table, k **[W/m² K]**
4. The temperature difference between desired enclosure interior temperature Ti [°C] and the expected ambient temperature Tu [°C] (eg. day - night, summer - winter, climate zones) ΔT **[K=Kelvin]**
5. The stray power (self-warming) of all installed componentsduring operation (eg. transformers, relays, semiconductors) P_v **[W]**

Calculation and selection of parameters: enclosure surface area - heat transfer coefficient - temperature difference

1. Enclosure surface area from dimensions

2. Enclosure position (plan view) accord. to VDE 0660 part 500

	Formula for cabinet surface area A **[m²]** (H = Height W = Width D = Depth)
Single enclosure free on all sides	A = 1.8 x H x (W + D) + 1.4 x W x D
Single enclosure, wall mounted	A = 1.4 x W x (H + D) + 1.8 x D x H
First or last enclosure in free standing row	A = 1.4 x D x (H + W) + 1.8 x W x H
First or last enclosure in wall mounted row	A = 1.4 x H x (W + D) + 1.4 x W x D
Middle enclosure in free standing row	A = 1.8 x W x H + 1.4 x W x D + D x H
Middle enclosure in wall mounted row	A = 1.4 x W x (H + D) + D x H
Middle enclosure in wall mounted row with covered top	A = 1.4 x W x H + 0.7 x W x D + D x H

Example: enclosure free on all sides, 2000mm high / 800mm wide / 600mm deep. A = 1.8 x 2.0 x (0.8 + 0.6) + 1.4 x 0.8 x 0.6 = 5.712m²

3. Enclosure material and its heat transfer coefficient k **[W/m² K]**

Steel sheet, painted	k~5.5W/m² K
Steel sheet, stainless	k~4.5W/m² K
Aluminium	k~ 12W/m² K
Aluminium, double-walled	k~4.5W/m² K
Polyester	k~3.5W/m² K

4. Temperature difference ΔT **[K=Kelvin]**

$$\Delta T = Ti - Tu$$

i.e. the temperature difference between the interior and exterior temperatures

CALCULATION FORMULA FOR REQUIRED HEATING PERFORMANCE (HEATER):

Required heating performance P_H **[W]** = enclosure surface area A **[m²]** x heat transfer coefficient k **[W/m² K]** x temperature difference ΔT **[K]**

Example: W = 5.712m² x 5.5W/m² K x 15K = 471.24W

Result: Heater with **500W** heating performance is required. If enclosure is situated outdoors the calculated heating performance must be doubled!

OR CHOOSE REQUIRED HEATING PERFORMANCE FROM DIAGRAM:

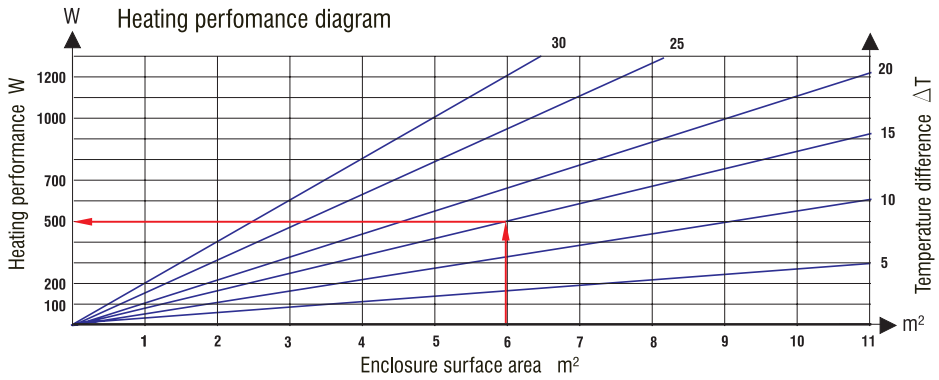

5. In the case of continuous stray power P_v **[W]** (self-warming) this must be deducted from the calculated heating performance.

CHOOSE REQUIRED COOLING PERFORMANCE FROM DIAGRAM:

OR CALCULATE USING FORMULA FOR REQUIRED COOLING PERFORMANCE (FILTER FAN):

$$\text{Required air volume V } [m^3/h] = \frac{\text{installed stray power Pv [W]}}{\text{temperature difference } \Delta T \text{ [K]}} \times \text{air constant f*} \quad [3.3 m^3\ K/Wh]$$

$$\text{Example: } V = \frac{600W}{15K} \times 3.3 m^3\ K/Wh = 132 m^3/h$$

*f(0-100)=3.1m³ K/Wh, f(100-250)=3.2m³ K/Wh, f(250-500)=3.3m³ K/Wh, f(500-750)=3.4m³ K/Wh, f(750-1000)=3.5m³ K/Wh

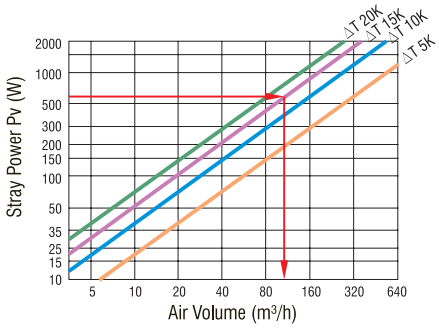

Notes

STEGO Elektrotechnik GmbH
Kolpingstraße 21
74523 Schwäbisch Hall
Deutschland
Tel. +49 (0)791 95058 0
Fax +49 (0)791 95058 45
info@stego.de
www.stego.de

STEGO, Inc.
1395 S. Marietta Pkwy
Building 800
Marietta, GA 30067
USA
Tel. +1 770 984 0858
Fax +1 770 984 0615
info@stegousa.com
www.stegousa.com

STEGO Norden AB
Box 4111
Jarlabergsvägen 2, 2tr
SE-131 04 Nacka
Sverige
Tel. +46 (0)8 545 86160
Fax +46 (0)8 545 86161
info@stegonorden.se
www.stegonorden.se

STEGO do Brasil Ltda.
Rua Cons. Saraiva 306 - cj 64
Santana
02037-020 Sao Paulo SP
Brasil
Tel. +55 (0)11 6283 3222
Fax +55 (0)11 6978 4783
info@stego.com.br
www.stego.com.br

STEGO Italia S.R.L.
Via Trucchi 25
10078 Venaria (TO)
Italia
Tel. +39 011 4593 287
Fax +39 011 4593 164
info@stego.it
www.stego.it

STEGO France S.A.
Port de Conflans Fin d'Oise
Le Beaupré N° 2
78700 Conflans Sainte Honorine
France
Tel. +33 (0)1 3919 5757
Tel. +33 (0)1 3919 5447
info@stego.fr
www.stego.fr

STEGO UK Ltd.
Unit 12, First Quarter Business Park
Blenheim Road
Epsom
Surrey KT19 9QN
England
Tel. +44 (0)1372 747250
Tel. +44 (0)1372 729854
info@stego.co.uk
www.stego.co.uk

STEGOTRONIC S.A.
Av Europa, N° 35 Nave 10
Poligono Industrial Igualada
08700 Igualada
España
Tel. +34 (0)93 806 6026
Fax +34 (0)93 806 6057
stegotronic@stegotronic.es
www.stegotronic.es

STEGO Polska Sp. z o.o.
Ul. Banacha 11
41-200 Sosnowiec
Polska
Tel. +48 (0)32 263 22 42
Fax +48 (0)32 263 22 68
info@stego.pl
www.stego.pl



edited by:

SIEMENS AG
Automation and Drives
Low Voltage Controls and Distribution
Suedstrasse 74
04178 Leipzig/Boehlitz-Ehrenberg
Germany

Tel +49 (0) 341 4470-493
Fax +49 (0) 341 4470-460
Sicube.hotline@siemens.com

Please visit us on the internet:
http:/www.sicube.com

Order-No.: E86060-K1921-A101-A1-7600

© STEGO Elektrotechnik GmbH 01/2007