

Infineon/EBV Communications Catalog

Wireline Communication Products

Searchdatasheet.com

Infineon

EBV Elektronik
An Avnet Company

Infineon/EBV Communications Catalog

Wireline Communication Products

Value-added triple-play services of video, voice and high-speed data are driving the broadband access market. Infineon is powering this rapidly expanding market with our leading portfolio of wireline communication system-on-chip products. Through innovative processes and extensive knowledge of the market and its needs, Infineon design small, highly integrated, feature-rich and low-power silicon solutions addressing the needs of system manufacturers, telecommunication operators, service providers, and end users alike.

Partnering with leading global telecommunication system providers and operators, Infineon´s advanced Symmetrical DSL, VoIP, T/E-Carrier, HDLC Controller and SLIC™/CODEC line card solutions beat the heart of the worlds most advanced public networks. On the user side, our broadband CPE devices provide all necessary building blocks for ATA, VoIP- Routers, VoIP Terminals and Pbx. We offer our customers complete hardware/software ready-to-deploy reference designs to speed design cycles and shorten time-to-market.



DUSLIC™-xT2, PG-TQFP-100

TABLE OF CONTENT

Ethernet Network Processor 3
Ethernet Switches 4
Voice Over Ip 5
VoIP Terminals 6
SLIC™ and Codec 7
ISDN Product Overview 8
Symmetrical DSL 9
T/E-carrier – E1/T1/J1 10
HDLC Controller 11

All statements are without any engagement. Subject to modifications and amendments.

ETHERNET NETWORK PROCESSOR

The **ADM 3120BX** from Infineon is a high performance, integrated and highly flexible SoC (System-on-a-Chip) network controller. Internally, the chip consists of a high performance embedded MIPS CPU, an embedded switch engine, one MII interface, five IEEE 802.3 fast Ethernet MAC with embedded 10/100Mbit/s PHYs and interfaces for Uart, SDRAM and asynchronous static memory (NOR Flash, SRAM, ROM). The ADM3120BX enables the sharing of IP-based broadband services throughout the home and office using wired and wireless computers, entertainment equipment, printers and other intelligent devices.

TwinPass-E is a highly integrated SoC chip which employs two powerful 333 MHz MIPS 24KEc CPU's. One CPU is for high performance and secure network processing and the other for customers innovative applications e.g. high speed 802.11n and video streaming. To unleash the dual powerful MIPS cores for more valuable applications, TwinPass-E embeds a proprietary processor to handle the network protocol functions with high bandwidth throughput and without MIPS core involvement. The DDR memory controller can reach 167 MHz which supports a 16-bit DDR-333 memory module.

TwinPass-VE is a highly integrated VoIP processor SoC for wired and wireless VoIP router applications. TwinPass-VE employs two powerful 333 MHz MIPS 24KEc CPUs. One CPU is used for network processing while the other is directly connected to the analogue line module for high quality voice processing. The DDR memory controller can reach 167 MHz which supports a 16-bit DDR-333 memory module.



TwinPass-VE, PG-LB6A-256

ADM 5120, ADM 3120, TwinPass			Application				
Product Name	**Part Number**	**Product Description**	**Wired-Router**	**Wired-, VoIP-Router**	**Wireless-Router**	**Wireless-, VoIP-Router**	**ATA**
Network Processor	ADM 3120 BX	System-on-chip home gateway controller, MIPS 4Kc with MMU, 5TP, 2UART	•	•			•
Network Processor	ADM 5120 X	System-on-chip home gateway controller, MIPS 4Kc with MMU, USB 1.1, PCI, 5TP + GMII, 2UART			•	•	
Network Processor	ADM 5120 PX	System-on-chip home gateway controller, MIPS 4Kc with MMU, USB 1.1, 5TP + MII, 2UART	•	•			
TwinPass-E	PXB 4000	Network processor system-on-chip, dual MIPS 24KEc with MMU, USB 2.0 host/device, PCI/Cardbus, 2TMII/MII/RMII, TDM, UART, SPI, SD/MMCI	•		•		
TwinPass-VE	PXB 4010	Network processor system-on-chip, dual MIPS 24KEc with MMU and 2*integrated codec´s and 2*slic interfaces, USB 2.0 host/device, PCI/Cardbus, 2TMII/MII/RMII, TDM, UART, SPI, SD/MMCI		•		•	

Evaluation Board	Part Number	Product Description
Network Processor	EASY 5120-RT	Evaluation board for ADM5120 X, router reference package
Network Processor	EASY 5120-WVOIP RT	Evaluation board for ADM5120 X, ATA/VoIP router reference package
TwinPass-E	EASY 4000-MRT	Evaluation board for PXB 4000, router reference package
TwinPass-VE	EASY 4010-VRT	Evaluation board for PXB 4010, VoIP router reference package

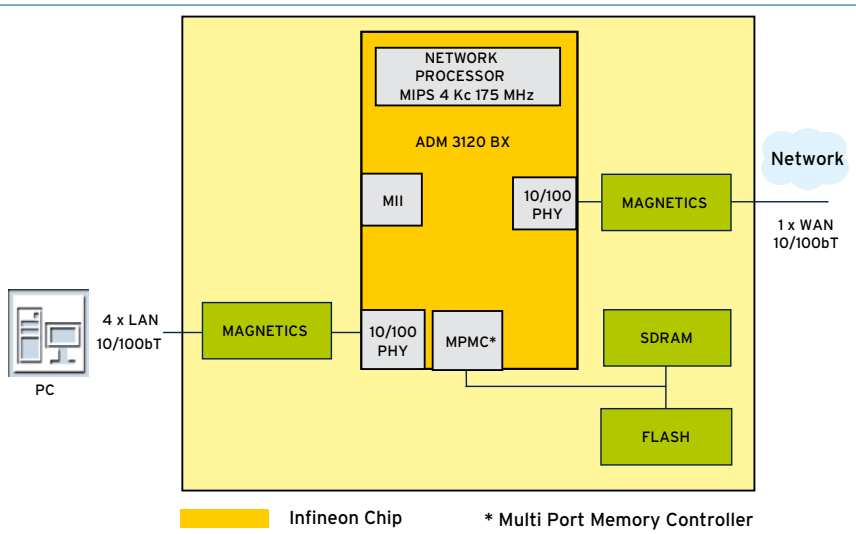

Wired- Router/ADM 3120BX

ETHERNET SWITCHES

Infineon switch product target Home Networking for Triple Play trend. Its excellent features on video can give user good quality on IP-TV.

The **TANTOS** is a high performance, highly integrated seven-port Ethernet switch controller with five ports supporting 10/100 Mbit/s TX/FX Full/Half duplex and two/three supporting 10/100/1000 MAC Full/Half duplex operations.

Advanced features such as 802.1p (QoS), 802.1q (VLAN), Layer-4 QoS, Security, Bandwidth Control/Guarantee, Port Mirroring, IGMP and Management functions make the TANTOS one of the most innovative and economically low-port switches available for Multimedia applications.

The **SAMURAI** is a high performance, low power, advanced featured, L2 five and six-port 10/100 Mbps TX/FX switch family. The SAMURAI is aimed at the low port market for such applications as multimedia devices, routers, gateways, IADs and VoD applications. Featuring support for Layer-4 QoS, IGMP implementation in hardware as well as software, Port Mirroring and an ultra low power design process, the SAMURAI provides a cost-effective solution for 5 and 6 port switch controller applications.



TANTOS-OG, PG-LQFP-100

Evaluation Board	Part Number
SAMURAI	EASY 6996 FC
SAMURAI	EASY 6996 I
SAMURAI	EASY 6996 I CPU
SAMURAI	EASY 6996 LC
SAMURAI	EASY 6996 M
SAMURAI	EASY 6996 M CPU SIDE
SAMURAI	EASY 6996 HX CPU
SWITCH	EASY 6999
SWITCH	EASY 6999 U
TANTOS	EASY 6970
TANTOS	EASY 6972
TANTOS	EASY 6973 TANTOS-3G
TANTOS	EASY 6973 TANTOS-3GE

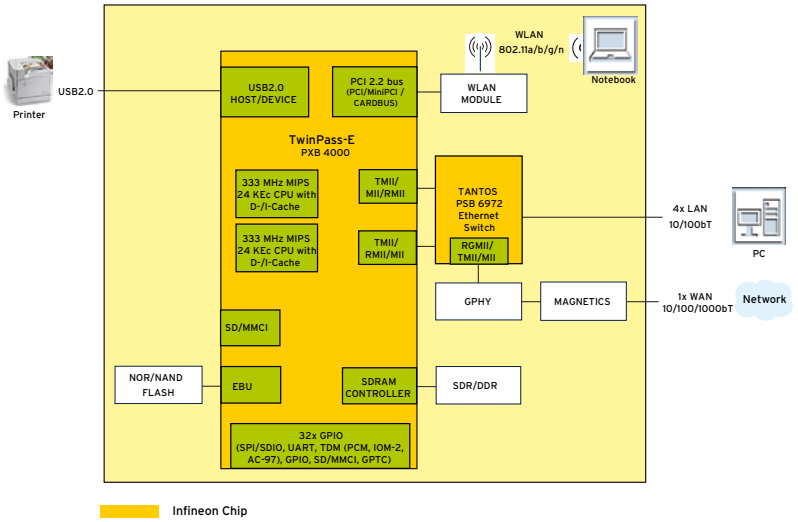

Wireless-Router/TANTOS

SAMURAI, ADM 6999, TANTOS		Application					
Product Name	**Part Number**	**Layer-2 Switch**	**Router**	**Tripple Play Router**	**Tripple Play xDSL Modem/IAD**	**IP-Settop Box**	**Hdlc Applications**
SAMURAI	ADM 6995 LCX	•	•				
SAMURAI	ADM 6996 FCX	•	•				
SAMURAI	ADM 6996 IX	•	•				
SAMURAI	ADM 6996 LCX	•	•				
SAMURAI	ADM 6996 MX	•	•				
SAMURAI	ADM 6996 HX						•
TANTOS	PSB 6970			•	•	•	
TANTOS	PSB 6972			•	•	•	
TANTOS	PSB 6973			•	•	•	
TANTOS	PSF 6973			•	•	•	
SWITCH	ADM 6999 X	•	•				
SWITCH	ADM 6999 UX	•	•				

VOICE OVER IP

Infineon's **VINETIC™** family of analog voice access ICs includes 1, 2 and 4 channel codecs that are optimised for Customer Premises Equipment (CPE) as well as Central Office (CO) access network applications. Featuring four levels of integrated DSP performance, the VINETIC™ offers system providers a wide range of flexible solutions from pure TDM functionality (see SLIC™ AND Codec), up to full blown VoIP or VoATM packet and voice processing engines. With a comprehensive set of specially designed packet based voice transmission features, the VINETIC™ provides the DSP power required for each specific application.



VINETIC™-2PLUS, PG-LBGA-144

VINETIC™					Application						
		Product Name	Part Number	Product Description	Cable Modem	DECT ATA	VoIP Router	VoIP xDSL Modem	ATA	Pbx	Line Card
CPE	Dsp + Codec + SLIC™	VINETIC™-1PLUS	PEB 33321	Dual-channel codec/single-channel SLIC™ and VoIP DSP, 0...+85 °C	•		•	•	•		
		VINETIC™-2PLUS	PEB 33322	Dual-channel codec/dual-channel SLIC™ and VoIP DSP, 0...+85 °C	•		•	•	•		
	Dsp	VINETIC™-CL	PEB 3340	Dual-channel VoIP DSP with PCM interface (no SLIC™ interface), 0...+85 °C		•					
PBX	Dsp + Codec + SLIC™	VINETIC™-1PLUS	PEB 33321	Dual-channel codec/single-channel SLIC™ and VoIP DSP, 0...+85 °C						•	
		VINETIC™-2PLUS	PEB 33322	Dual-channel codec/dual-channel SLIC™ and VoIP DSP, 0...+85 °C						•	
	Dsp	VINETIC™-0	PEB 3320	Quad-channel VoIP DSP with PCM interface (no SLIC™ interface), 0...+85 °C						•	
	Dsp + Codec	VINETIC™-4VIP	PEB 3324	Quad-channel codec and VoIP DSP, 0...+85 °C						•	
		VINETIC™-4M	PEF 3314	Quad-channel codec with VoIP DSP, -40...+85 °C						•	
Line Card	Dsp + Codec	VINETIC™-4VIP	PEB 3324	Quad-channel codec and VoIP DSP, 0...+85 °C							•
		VINETIC™-4M	PEF 3314	Quad-channel codec with VoIP DSP, -40...+85 °C							•

	Evaluation Board	Part Number	Product Description
Line Card/PBX	VINETIC™-4VIP	EASY 334	Evaluation board for PEB 3324/PEF 3314. Evaluation board includes 1 x EASY 334 + 2x SMART 4265 (SLIC™-E)

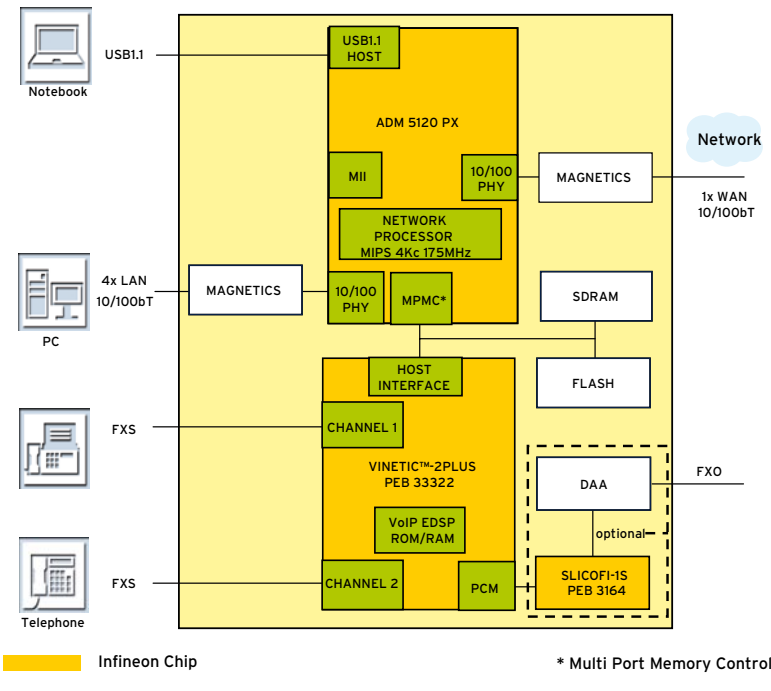

Wired- VoIP Router/VINETIC™-2PLUS

VOIP TERMINALS

INCA™-IP2 is Infineon's second generation of IP-Phone terminal chips, and the 5th generation of PBX phone devices. Enabled by two powerful 400 MHz MIPS CPU's and an internal Gigabit Ethernet switch it represents a quantum leap for IP Phones in the Telecommunication network.

INCA™-IP2s dual core approach offers a tremendous opportunity to IP Phone manufacturers to differentiate their phones in an increasingly competitive environment. The INCA™-IP2s powerful engine turns the IP-Phone into an IP appliance enabling a slew of voice and multimedia features. Phone makers can consider adding AMR, LEC, AEC, T.38, MP3 decoding, MiDi Synthesiser and even streaming video to their feature sets.

INCA™-IP2F addresses the mid-range enterprise IP-Phone market and is pin-to-pin compatible with the INCA™-IP2s.



INCA™-IP2s, PG-LBGA-324

Evaluation Board	Part Number	Product Description
INCA™-IP2	EASY 21653-Phone	Evaluation board for PSB 21653

INCA™-IP2			Application	
Product Name	**Part Number**	**Product Description**	**Mid-Range Enterprise IP-Phone**	**High-End Enterprise IP-Phone**
INCA™-IP2s	PSB 21653	Single-chip IP-phone solution with AFE, 2*MIPS 4KEc @ 400 MHz, three-port GbE switch, 2x GMAC with 2x RGMII interface, 2x integrated 10/100BaseT ethernet MAC and PHYs, USB 2.0 host, PCM, 2UART/ASC, 2SSC/SPI, Data encryption Unit supporting encryption (DES/3DES, AES) and hashing (SHA-1, MD5)		•
INCA™-IP2F	PSB 21650	Single-chip IP-phone solution with AFE, 2*MIPS 4KEc @ 262 MHz, three-port ethernet switch, 2x integrated 10/100BaseT ethernet MAC and PHYs, PCM, 2UART/ASC, 2SSC/SPI, Data encryption Unit supporting encryption (DES/3DES, AES) and hashing (SHA-1, MD5)	•	

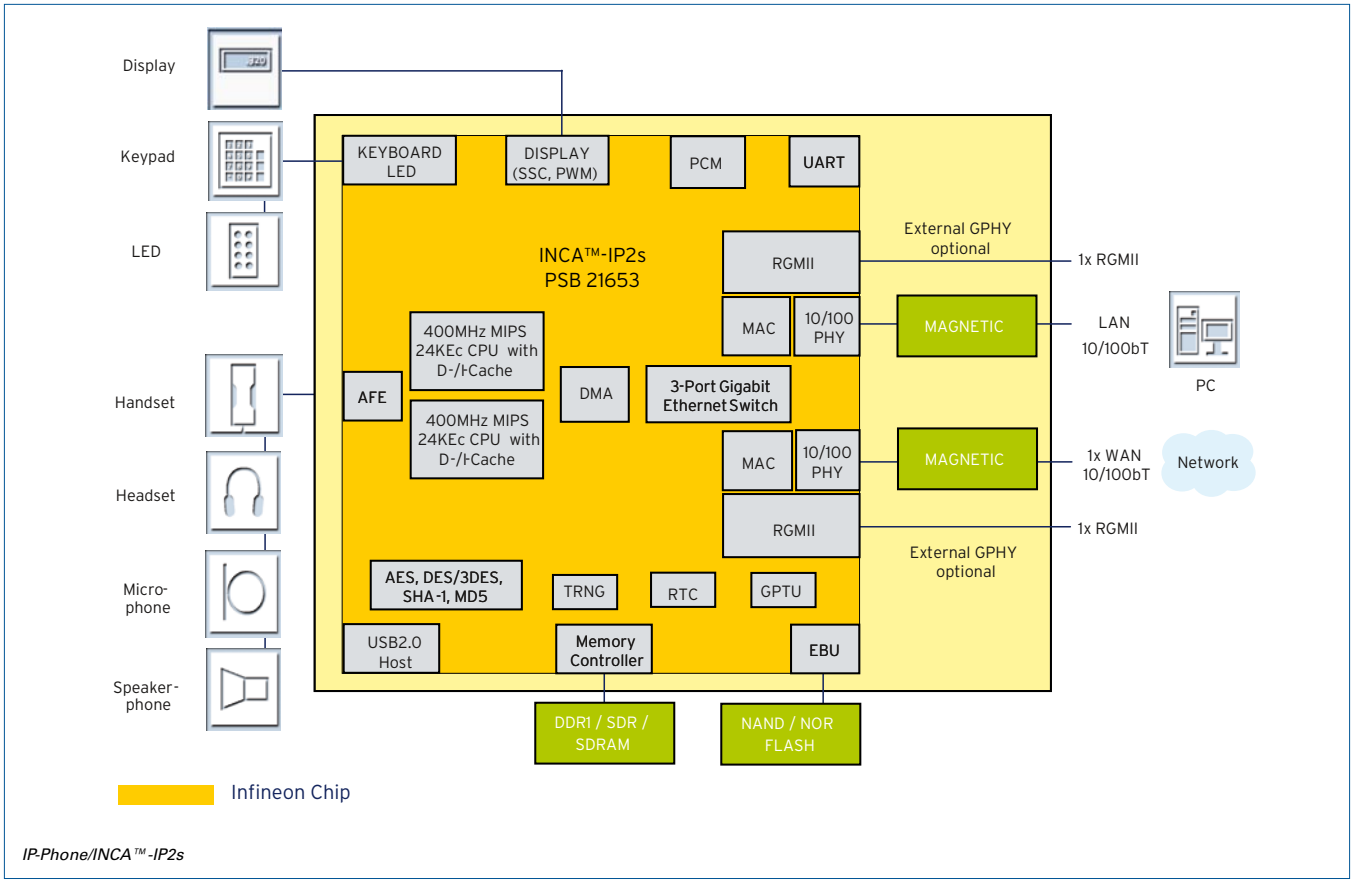

IP-Phone/INCA™-IP2s

SLIC™ AND CODEC

An undisputed market leader in Voice Access, Infineon has gained extensive experience powering telecommunication networks in over 120 countries worldwide. Our extensive product offering includes complete chipset solutions for CPE, PBX and Line Card applications including VoIP line card systems.



DUSLIC™-xT2, PG-TQFP-100

SICOFI™ / FLEXISLIC™, DUSLIC™, VINETIC™				
		Product Name	**Part Number**	**Product Description**
CPE	Codec + SLIC™	DUSLIC™-xT1	PEF 3101	DUSLIC™: Next generation single channel subscriber line interface circuit in a single package, 0...+85 °C, 2x FXS
		DUSLIC™-xT2	PEF 3201	DUSLIC™: Next generation dual channel subscriber line interface circuit in a single package, 0...+85 °C, 1x FXS
		DUSLIC™-FXO**	PEF 3111	DUSLIC™: Next generation dual channel subscriber line interface circuit in a single package, 0...+85 °C, 1x FXS and 1x FXO (external DAA needed)
	Slic	SLIC™-DC	PEF 4268	DUSLIC™: Subscriber line interface circuit, with integrated DC/DC converter, -40...+85 °C
PBX	Codec + SLIC™	DUSLIC™-xT1	PEF 3101	DUSLIC™: Next generation single channel subscriber line interface circuit in a single package, 0...+85 °C, 2x FXS
		DUSLIC™-xT2	PEF 3201	DUSLIC™: Next generation dual channel subscriber line interface circuit in a single package, 0...+85 °C, 1x FXS
		DUSLIC™-FXO	PEF 3111	DUSLIC™: Next generation dual channel subscriber line interface circuit in a single package, 0...+85 °C, 1x FXS and 1x FXO (external DAA needed)
	Codec	SLICOFI-1S	PEB 3164	DUSLIC™: Single-channel subscriber line interface codec filter, standard feature set, 0...+85 °C
		SLICOFI-2S	PEB 3264	DUSLIC™: Dual-channel subscriber line interface codec filter, standard feature set, 0...+85 °C
		SLICOFI-1	PEB 3165	DUSLIC™: Single-channel subscriber line interface codec filter, enhanced feature set, 0...+85 °C
		SLICOFI-2	PEB 3265	DUSLIC™: Dual-channel subscriber line interface codec filter, enhanced feature set, 0...+85 °C
	SLIC™	SLIC™-S	PEF 4264	DUSLIC™: Subscriber line interface circuit, standard feature set, -40...+85 °C
		SLIC™-S2	PEF 4264-2	DUSLIC™: Subscriber line interface circuit, enhanced feature set, -40...+85 °C
		TSLIC-S	PEB 4364	DUSLIC™: Twin subscriber line interface circuit, standard feature set, 0...+85 °C
Line Card	Codec	SICOFI™-4µC	PEB 2466	SICOFI™-4 µC. Quad-channel codec filter with PCM and microcontroller interface, 0...+85 °C.
		SICOFI™-4µC	PEF 2466	SICOFI™-4 µC. Quad-channel codec filter with PCM and microcontroller interface, -40...+85 °C.
		SLICOFI-1	PEB 3165	DUSLIC™: Single-channel subscriber line interface codec filter, enhanced feature set, 0...+85 °C
		SLICOFI-2	PEB 3265	DUSLIC™: Dual-channel subscriber line interface codec filter, enhanced feature set, 0...+85 °C
		VINETIC™-4S	PEF 3304	VINETIC™: Fully programmable quad-channel CODEC with voice processing DSP, standard feature set, -40...+85 °C
		VINETIC™-4C	PEF 3394	VINETIC™: Fully programmable quad-channel CODEC with voice processing DSP, enhanced feature set, -40...+85 °C
	SLIC™	FLEXISLIC™	PBL 38621	FLEXISLIC™. Subscriber line interface circuit for linecard with polarity reversal
		FLEXISLIC™	PBL 38640	FLEXISLIC™. Subscriber line interface circuit for extended linecard functionality
		SLIC™-P	PEB 4266	DUSLIC™: Subscriber line interface circuit, enhanced power management, 0...+85°C
		SLIC™-E	PEF 4265	DUSLIC™: Subscriber line interface circuit, standard feature set, -40...+85 °C
		SLIC™-E2	PEF 4265-2	DUSLIC™: Subscriber line interface circuit, enhanced feature set, -40...+85 °C
		TSLIC-E	PEF 4365	DUSLIC™: Twin subscriber line interface circuit, enhanced feature set, -40...+85 °C

	Evaluation Board	**Part Number**	**Product Description**
Codec + SLIC™	DUSLIC™-xT	EASY 3201	Evaluation board for PEF 3101 and PEF 3201
Codec	SICOFI™-4 µC	EASY 2466	Evaluation system for SICOFI™/FLEXISLIC™. Evaluation system includes: 1 x SMART 2466 + 1 x SMART 2000 + 2 x SMART 386xx.
	SLICOFI-1/-2 (-1S/-2S)	EASY 3265	Tool package for DUSLIC™ family. Tool package includes: 1 x SMART 3265 + 1 x SMART 4265 + 1 x SMART 2000
	SLICOFI-1/-2 (-1S/-2S)	EASY 3265	Tool package for DUSLIC™ family. Tool package includes: 1 x SMART 3265 + 1 x SMART 4265 + 1 x SMART 2000
	VINETIC™-4C/-4S	EASY 334	Evaluation board for PEF 3394, PEF 3304, PEB 3324, PEF 3314. Evaluation board includes 1 x EASY 334 + 2 x SMART 4265 (SLIC™-E)
SLIC™	SLIC™-DC	SMART 4268	Evaluation board for PEF 4268
	SLIC™-E, SLIC™-P, SLIC™-S	SMART 4265 P-VQFN-48	Evaluation board for PEF 4265 or PEF 4266 or PEF 4264. PEF 4265 with P-VQFN-48 package mounted on board
	SLIC™-E, SLIC™-P, SLIC™-S	SMART 4265 P-DSO-20	Evaluation board for PEF 4265 or PEF 4266 or PEF 4264. PEF 4265 with P-DSO-36 package mounted on board
	TSLIC-E / TSLIC-S	SMART 4365 P-DSO-36	Evaluation board for PEB 4365 and PEB 4364. PEF 4365 with P-DSO-36 package soldered on board

*** Available Q4/2008*

ISDN PRODUCT OVERVIEW

Infineon's Isdn product spectrum covers the complete ISDN functionality for Access networks to CPE applications. This addresses comprehensive end to end solutions with S/T, Up/Upn transceiver, PBX controller, terminal products and network termination controllers among others.



DELIC-PB, PG-TQFP-100

SBCX-X, ISAC™, IPAC, OCTAT™, VIP, DELIC, SCOUT™, AFE/DFE, SMINT™, EPIC™, IHPC, QIHPC, UTAH			
	Product Name	**Part Number**	**Product Description**
Isdn S/T, Upn and Up Transceiver	SBCX-X	PEB 3081	Full duplex 2B + D S/T interface transceiver according to ITU-T I.430, 0...+85 °C
	ISAC™-SX	PEB 3086	Full duplex 2B + D S/T interface transceiver according to ITU-T I.430 with one D-channel HDLC controller and one B-channel HDLC controller with reduced functionality, 0...+85 °C
	ISAC™-SX-TE	PSB 3186	Isdn subscriber access controller for terminals, full duplex 2B + D S/T interface transceiver according to ITU-T I.430, 0...+85 °C
	IPAC-X	PSB 21150	Isdn PC adapter circuit extended, full duplex 2B + D S/T interface transceiver according to ITU-T I.430, 0...+85 °C
	IPAC-X	PSF 21150	Isdn PC adapter circuit extended, full duplex 2B + D S/T interface transceiver according to ITU-T I.430, -40...+85 °C
	OCTAT™-P	PEB 2096	Isdn Up-transceiver
	VIP	PEB 20590	Versatile Isdn port. 8 Isdn interfaces with up to 4 S/T and 4 Upn or 8 Upn interfaces (only available with DELIC-LC/-PB), 0...+85 °C
	VIP-8	PEB 20591	Versatile Isdn port. 8 Isdn interfaces with up to 8 S/T or 8 Upn interfaces (only available with DELIC-LC/-PB), 0...+85 °C
Isdn PBX Controller	DELIC-LC	PEB 20570	Line card controller, supporting up to three VIP/VIP-8 (24 Isdn channels)
	DELIC-PB	PEB 20571	PBX controller with integrated DSP, supporting up to three VIP/VIP-8 (24 Isdn channels), 0...+85 °C
	DELIC-PB	PEF 20571	PBX controller with integrated DSP, supporting up to three VIP/VIP-8 (24 Isdn channels), -40...+85 °C
Isdn Terminal	SCOUT™-S	PSB 21382	Speech codec with S/T transceiver
	SCOUT™-SX	PSB 21383 / 84	Speech codec with S/T transceiver featuring speakerphone functionality
	SCOUT™-P	PSB 21391	Speech codec with Upn transceiver
	SCOUT™-PX	PSB 21393	Speech codec with Upn transceiver featuring speakerphone functionality
	INCA™-P	PSB 21493	Speech codec with Upn transceiver and embedded microcontroller featuring acoustic echo cancellation
Isdn Echo Cancellation Circuit	AFE-T/Q	PEF 24902	Quad-channel Isdn echo cancellation circuit for 4B3T/2B1Q line code, -40...+85 °C (only available as chipset IEC4-T/Q)
	DFE-T	PEF 24901	Quad-channel Isdn echo cancellation circuit for 4B3T line code, -40...+85 °C (only available as chipset IEC4-T: AFE-T + DFE-T)
	DFE-Q	PEF 24911	Quad-channel Isdn echo cancellation circuit for 2B1Q line code, -40...+85 °C (only available as chipset IEC4-Q: AFE-Q + DFE-Q)
Isdn Network Termination Controller	T-SMINT™-O	PEF 80902	4B3T 2nd-generation modular Isdn NT (ordinary)
	T-SMINT™-I	PEF 82902	4B3T 2nd-generation modular Isdn NT (intelligent)
	Q-SMINT™-O	PEF 80912	2B1Q 2nd-generation modular Isdn NT (ordinary)
	Q-SMINT™-I	PEF 82912	2B1Q 2nd-generation modular Isdn NT (intelligent)
Isdn PCM Interface Controller	EPIC™-S	PEF 2054	Extended PCM interface controller (16 Isdn or 32 analog subscribers)
	EPIC™-1	PEF 2055	Extended PCM interface controller (32 Isdn or 64 analog subscribers)
	ELIC	PEF 20550	Extended linecard interface controller (32 Isdn or 64 analog subscribers)
Isdn/S(H)DSL Power Controller	IHPC	PEF 2026	Single Isdn high-voltage power controller, -40...+85 °C
	IHPC	PEB 2026	Single Isdn/Shdsl high-voltage power controller, 0...+85 °C
	(Q)IHPC	PEF 2426	Quad Isdn high-voltage power controller, -40...+ 85 °C
Microcontroller for Isdn	UTAH	SAF-C165H-LF	16-bit microcontroller with Hdlc and IOM-2
	UTAH	SAF-C165UTAH-LF	16-bit microcontroller with USB, Hdlc and IOM-2

SYMMETRICAL DSL

The Infineon **SOCRATES™** family of Shdsl transceivers offers a range of single to multi-channel connectivity and is fully compliant to ITU and ETSI Shdsl standards. Targeting applications such DSLAMs, Cellular Base Stations, Repeaters, SHDSL Modems and more, the SOCRATES™ family members offer best-in-class performance and lowest power consumption. The unique features, and high-integration levels of the SOCRATES™ family members, have helped Infineon secure the Number 1 position in the Shdsl IC market.

Evaluation Board	Part Number	Product Description
SDFE-4	EASY SDFE-4	Evaluation board for PEF 24624
SOCRATES™-4e	EASY 24628 MII/UTOPIA	Evaluation board for PEF 24628



SOCRATES™-4e, PG-LBGA-324

SOCRATES™			Application			
Product Name	**Part Number**	**Product Description**	**SHDSL Repeater**	**TDM SHDSL Modem/ Router**	**EFM/ATM SHDSL Modem/ Router**	**TDM/ EFM/ATM SHDSL Line Card**
SDFE-1 (SOCRATES™)	PEF 21624	Single-channel SHDSL front end for TDM applications		•		
SDFE-2 (SOCRATES™)	PEF 22624	Dual-channel SHDSL front end for TDM applications		•		
SDFE-4 (SOCRATES™)	PEF 24624	Quad-channel SHDSL front end for TDM applications	•			
SOCRATES™-1e	PEF 21628	Single-channel EFM SHDSL front end for EFM, ATM, TDM applications			•	
SOCRATES™-2e	PEF 22628	Dual-channel EFM SHDSL front end for EFM, ATM, TDM applications			•	
SOCRATES™-4e	PEF 24628	Quad-channel EFM SHDSL front end for EFM, ATM, TDM applications				•
SOCRATES™-1u	PEF 21627	Single-channel SHDSL front end for ATM, TDM applications			•	
SOCRATES™-2u	PEF 22627	Dual-channel SHDSL front end for ATM, TDM applications			•	
SOCRATES™-4u	PEF 24627	Quad-channel SHDSL front end for ATM, TDM applications				•

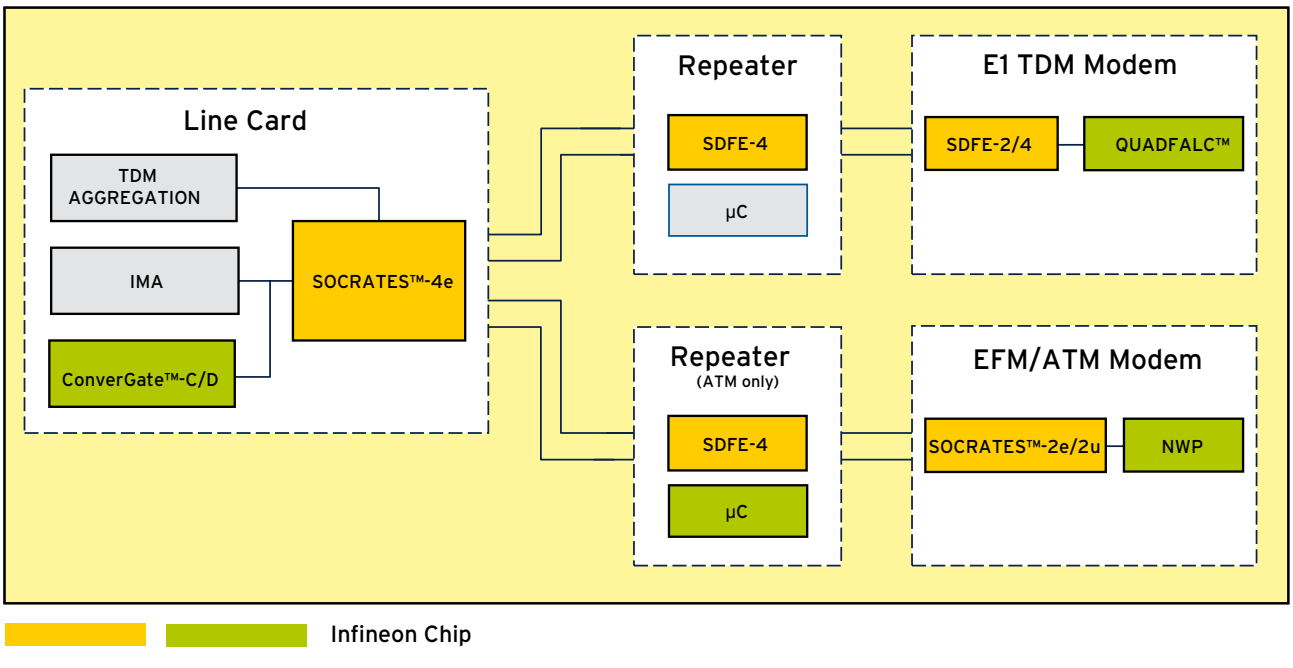

Line Card, Repeater, Modem/SOCRATES™

T/E CARRIER – E1/T1/J1

Infineon is the undisputed market leader for integrated E1/T1 Framer and Line Interface Unit (LIU) components. This leading position is a direct result of extensive mixed-signal design and manufacturing know how, combined with system knowledge and a history of commitment to supporting the primary rate T/E carrier market. The T/E carrier product portfolio illustrates Infineon`s commitment to producing leading edge, 'best in class' solutions for the networks of today, and of the future. Products such as **OCTALFALC™** enable customers to produce highly integrated, cost effective solutions, with a faster time to market.

Evaluation Board	Part Number	Product Description
FALC™-56	EASY 2256	Evaluation board for PEF 2256
DUALFALC™	EASY 22552	Evaluation board for PEF 22552
QUADFALC™	EASY 22554	Evaluation board for PEF 22554
OCTALFALC™	EASY 22558	Evaluation board for PEF 22558
OCTALLIU	EASY 22508	Evaluation board for PEF 22508



QUADFALC™, PG-LBGA-160

FALC™, LIU, FRAMER			Application		
Product Name	**Part Number**	**Product Description**	**Pbx Trunk Interface**	**Pbx Inter-connection**	**2G/3G BTS/BSC**
FALC™-56	PEF 2256	Single-channel E1/T1/J1 Framer, Line Interface Unit (LIU) and signaling controller long-haul and short-haul applications	•	•	
DUALFALC™	PEF 22552	Dual-channel E1/T1/J1 Framer, Line Interface Unit (LIU) and signaling controller for long-haul and short-haul applications	•	•	
QUADFALC™	PEF 22554	Quad-channel E1/T1/J1 Framer, Line Interface Unit (LIU) and signaling controller for long-haul and short-haul applications			•
OCTALFALC™	PEF 22558	Octal-channel E1/T1/J1 Framer, Line Interface Unit (LIU) and signaling controller for long-haul and short-haul applications			•
QUADLIU	PEF 22504	Quad-channel E1/T1/J1 Line Interface Unit (LIU) for long-haul and short-haul applications			•
OCTALLIU	PEF 22508	Octal-channel E1/T1/J1E1/T1/J1 Line Interface Unit (LIU) for long-haul and short-haul applications			•
OCTALFRAMER	PEF 22557	Octal-channel E1/T1/J1 Framer			•

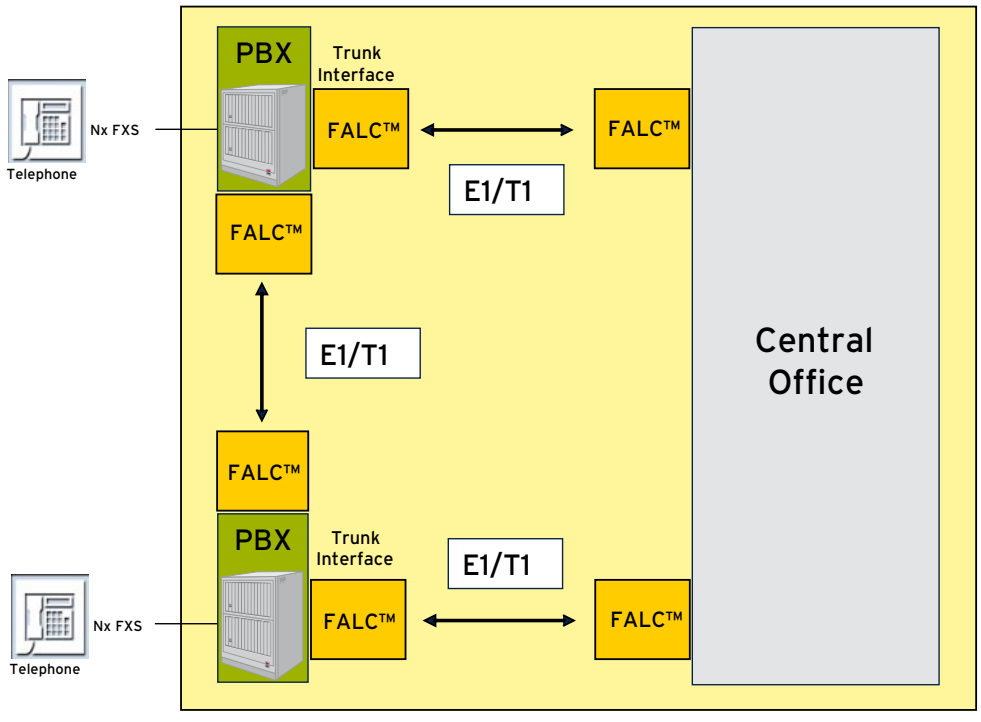

PBX Trunk Interface, PBX Interconnection/FALC™

HDLC CONTROLLER

Based on many years of experience in the HDLC protocol controller business Infineon offers an extensive HDLC product portfolio today. Besides unchannelised HDLC controllers like the industry standard SEROCCO™-family, channelised HDLC controlling on up to 256/512 channels can be supported by the MUNICH256/512. Targeting the TDM based wireless infrastructure and router applications Infineons HDLC protocol controller satisfy our customers by giving them the possibility to design highest flexible and cost effective solutions without loosing any market competitiveness.



MUNICH256, PG-BGA-388

SEROCCO™, MUNICH			Application				
Product Name	**Part Number**	**Product Description**	**Serial point-to-point Communi-cation Link**	**Pbx Trunk Interface**	**Pbx Inter-con-nection**	**T1/ E1/J1 Line Card**	**2G/3G BTS/ BSC**
SEROCCO™-H	PEB 20525	Dual-channel serial-optimised communication controller for HDLC and PPP. Full duplex data rates on each channel up to 12.5 Mbit/s, 0...+85 °C	•				
SEROCCO™-H	PEF 20525	Dual-channel serial-optimised communication controller for HDLC and PPP. Full duplex data rates on each channel up to 12.5 Mbit/s, -40...+85 °C	•				
SEROCCO™-M	PEB 20532	Dual-channel serial-optimised communication controller for HDLC and PPP. Full duplex data rates on each channel up to 16 Mbit/s, 0...+85 °C	•				
SEROCCO™-M	PEF 20532	Dual-channel serial-optimised communication controller for HDLC and PPP. Full duplex data rates on each channel up to 16 Mbit/s, -40...+85 °C	•				
SEROCCO™-D	PEB 20542	Dual-chanel serial-optimised communication controller for HDLC and PPP. Full duplex data rates on each channel up to 16 Mbit/s. Integr. DMA contr. with 4 independ. DMA channel, 0...+85 °C	•				
SEROCCO™-D	PEF 20542	Dual-chanel serial-optimised communication controller for HDLC & PPP. Full duplex data rates on each channel up to 16 Mbit/s. Integr. DMA contr. with 4 independ. DMA channel, -40...+85 °C	•				
MUNICH 256	PEB 20256	Multi-channel network interface controller for HDLC/PPP with 256 channels and on-chip data management unit. PCI interface		•	•	•	•
MUNICH 256e	PEF 21256	Multi-channel network interface controller for HDLC/PPP with 256 channels and on-chip data management unit. PCI Express interface		•	•	•	•
MUNICH 512	PEF 20512	Multi-channel network interface controller for HDLC/PPP/SS7 with 512 channels and on-chip data management unit. PCI interface		•	•	•	•
MUNICH 512e	PEF 21512	Multi-channel network interface controller for HDLC/PPP/SS7 with 256 channels and on-chip data management unit. PCI Express interface		•	•	•	•

Evaluation Board	Part Number	Product Description
SEROCCO™-H	EASY 20525	Evaluation board for PEB/PEF 20525
SEROCCO™-M	EASY 20532	Evaluation board for PEB/PEF 20532
SEROCCO™-D	EASY 20542	Evaluation board for PEB/PEF 20542
MUNICH 256	EASY 256 E1T1	Evaluation board for PEB 20256 (MUNICH256) and PEF 22554 (QUADFALC™)

ABOUT THE PARTNER COMPANY

About Infineon Technologies AG

Infineon Technologies AG, Neubiberg, Germany, offers semiconductor and system solutions addressing three central challenges to modern society: energy efficiency, communications, and security. In the 2007 fiscal year (ending September), the company reported sales of Euro 7.7 billion (including Qimonda sales of Euro 3.6 billion) with approximately 43,000 employees worldwide (including approximately 13,500 Qimonda employees). With a global presence, Infineon operates through its subsidiaries in the U.S. from Milpitas, CA, in the Asia-Pacific region from Singapore, and in Japan from Tokyo. Infineon is listed on the Frankfurt Stock Exchange and on the New York Stock Exchange (ticker symbol: IFX). For more information about Infineon visit **www.infineon.com**

ABOUT EBV

About EBV Elektronik

EBV Elektronik, an Avnet (NYSE:AVT) company, was founded in 1969 and is the leading specialist in European semiconductor distribution. EBV maintains its successful strategy of personal commitment to customers and excellent services. 240 Technical Sales Specialists provide a strong focus on a selected group of long-term manufacturing partners. 115 continuously trained Application Specialists offer extensive application know-how and design expertise. Warehouse operations, complete logistics solutions and value-added services such as programming, taping & reeling and laser marking are fulfilled by Avnet Logistics, EBV's logistical backbone and Europe's largest service centre. EBV operates from 60 offices in 28 countries throughout EMEA (Europe – Middle East – Africa). More information about EBV Elektronik under **www.ebv.com**

FSC
Mixed Sources
Product group from well-managed forests and other controlled sources
www.fsc.org Cert no. GFA-COC-001677
© 1996 Forest Stewardship Council

Interested in more product highlights from EBV Elektronik? Subscribe for our Newsletter at
www.ebv.com/newsletter

EBV European Headquarters
EBV Elektronik GmbH & CO. KG I D-85586 Poing | Im Technologiepark 2-8 | Tel. +49 (0)8121 774-0 | www.ebv.com

EBV REGIONAL OFFICES

AUSTRIA
A-1150 Wien
Diefenbachgasse 35/1
Tel. +43 (0)18 91 52-0
Fax +43 (0)18 91 52-30

BELGIUM
B-1831 Diegem
Kouterveldstraat 20
Tel. +32 (0)27 16 00 10
Fax +32 (0)27 20 81 52

CZECH REPUBLIC
CZ-170 00 Praha 7
Argentinská 38/286
Tel. +420-234 091 011
Fax +420-234 091 010

DENMARK
DK-8230 Åbyhøj
Ved Lunden 9
Tel. +45 86 25 04 66
Fax +45 86 25 06 60

DK-2860 Søborg
Rosenkæret 11 C
Tel. +45 39 69 05 11
Fax +45 39 69 05 04

ESTONIA
EE-13157 Tallinn
Ehitajate tee 114
Tel. +372 625 79 90
Fax +372 625 79 95
Cell. +372 513 22 32

FINLAND
FIN-02240 Espoo
Pihatörmä 1 a
Tel. +358 (0)927 05 27 90
Fax +358 (0)9 27 09 54 98

FIN-90100 Oulu
Nahkatehtaankatu 2
Tel. +358 (0)85 62 49 10
Fax +358 (0)85 62 49 15

FRANCE
F-13854 Aix-en-Provence
115, Rue Nicolas Ledoux
Immeuble Hemiris, Bâtiment A,
Tél. +33 (0)442 39 65 40
Fax +33 (0)442 39 65 50

F-92184 Antony Cedex (Paris)
3, rue de la Renaissance
Tél. +33 (0)140 96 30 00
Fax +33 (0)140 96 30 30

F-35510 Cesson Sévigné (Rennes)
29, av. des Peupliers
Tél. +33 (0)299 83 00 50
Fax +33 (0)299 83 00 60

F-67400 Illkirch Graffenstaden
Rue Gruninger
Parc d'innovation d 'Illkirch
Tél +33 (0)3 90 40 59 69
Fax +33 (0)3 88 65 11 25

F-31673 Labège Cedex (Toulouse)
Immeuble Actys B2, voie 3,
BP17316
Tél. +33 (0)561 00 84 61
Fax +33 (0)561 00 84 74

F-69693 Venissieux (Lyon)
Parc Club du Moulin à Vent
33, Av. du Dr. Georges Lévy
Tél. +33 (0)472 78 02 78
Fax +33 (0)478 00 80 81

GERMANY
D-12277 Berlin-Mariendorf
Kitzingstr. 15 - 19
Tel. +49 (0)30 74 70 05-0
Fax +49 (0)30 74 70 05-55

D-30938 Burgwedel
In der Meineworth 21
Tel. +49 (0)5139 80 87-0
Fax +49 (0)5139 80 87-70

D-41564 Kaarst
An der Gümpgesbrücke 7
Tel. +49 (0)2131 96 77-0
Fax +49 (0)2131 96 77-30

D-71229 Leonberg
Neue Ramtelstraße 4
Tel. +49 (0)7152 30 09-0
Fax +49 (0)7152 759 58

D-07806 Neustadt/Orla
Zum Mühlenberg 9
Tel. +49 (0)36481 2 44-0
Fax +49 (0)36481 2 44-99

D-90471 Nürnberg
Lina-Ammon-Str. 19B
Tel. +49 (0)911 817 669-0
Fax +49 (0)911 817 669-20

D-85586 Poing
Im Technologiepark 2-8
Tel. +49 (0)8121 774-0
Fax +49 (0)8121 774-422

D-78050 VS-Villingen
Kaiserring 12
Tel. +49 (0)7721 998 57-0
Fax +49 (0)7721 998 57-70

D-65205 Wiesbaden
Borsigstraße 36
Tel. +49 (0)6122 80 88-0
Fax +49 (0)6122 80 88-99

GREECE
GR-17778 Tavros
Anaxagora Str. 1
Tel. +30 210 34 14 300
Fax +30 210 34 14 304

HUNGARY
H-1037 Budapest
Montevideo u. 2/B
Tel. +36 1 436 72 29
Fax +36 1 436 72 20

IRELAND
IRL-Dublin 12
Calmount Business Park
Unit 7, Block C
Tel. +353 (0)14 09 78 02
Fax +353 (0)14 56 85 44

ISRAEL
IL-40600 Tel Mond
Drorrim South Commercial Center
P.O. Box 149
Tel. +972 (0)9 778 02 60
Fax +972 (0)9 796 68 80

ITALY
I-20092 Cinisello Balsamo (MI)
Via C. Frova, 34
Tel. +39 02 66 09 62 90
Fax +39 02 66 01 70 20

I-41100 Modena (MO)
Via Carlo Cattaneo, 54
Tel. +39 059 29 24 211
Fax +39 059 29 29 486

I-50127 Firenze
Via Panciatichi, 40
Palazzo 11
Tel. +39 05 54 36 93 07
Fax +39 05 54 26 52 40

I-80128 Napoli (NA)
Via G. Capaldo, 10
Tel. +39 081 579 97 70
Fax +39 081 579 97 70
Cell. +39 335 8 39 05 31

I-00155 Roma
Viale Palmiro Togliatti 1639
Tel. +39 064 06 36 65/789
Fax +39 064 06 37 77

I-35030 Sarmeola di Rubano (PD)
Piazza Adelaide Lonigo, 8/11
Tel. +39 049 89 74 701
Fax +39 049 89 74 726

I-10156 Torino
Corso Vercelli, 348
Tel. +39 011 262 56 90
Fax +39 011 262 56 91

NETHERLANDS
NL-3606 AK Maarssenbroek
Planetenbaan 116
Tel. +31 (0)346 58 30 10
Fax +31 (0)346 58 30 25

NORWAY
Postboks 101, Manglerud
Ryensvingen 3B
N-0681 Oslo
Tel. +47 22 67 17 80
Fax +47 22 67 17 89

POLAND
PL-02-672 Warszawa
ul. Woloska 18
Tel. +48 (0)22 640 23 55
Fax +48 (0)22 640 23 56

PL-50-062 Wroclaw
Pl. Solny 16
Tel. +48 (0)71 34-2 29-44
Fax +48 (0)71 34-2 29-10

ROMANIA
Construdava Business Center
Şos. Pipera-Tunari 4c
Voluntari, Ilfov (Bucharest)
RO - 077190 Romania
Tel. +40 21 529 6911
Fax +40 21 529 6901

RUSSIA
RUS-127486 Moscow
Korovinskoye Shosse 10,
Build 2, Off.28
Tel. +7 495 937 87 07
Fax +7 495 937 87 06

RUS-195197 St. Petersburg
Polustrovsky Prospect 43,
Office 421
Tel. +7 812 635 70 63
Fax +7 812 635 70 64

SLOVAK REPUBLIC
SK-85101 Bratislava
Digital Park, Einsteinova 21
Tel. +421 2 321 111 41
Fax +421 2 321 111 40

SLOVENIA
SI-1000 Ljubljana
Dunajska c. 159
Tel. +386 (0)1 56 09 778
Fax +386 (0)1 56 09 877

SOUTH AFRICA
ZA-8001 Foreshore, Cape Town
1 Mediterranean Street
5th Floor MSC House
Tel. +27 (0)21 402 19 40
Fax +27 (0)21 419 62 56

ZA-3629 Westville
Forest Square,11 Derby Place
Suite 4, Bauhinia Building
Tel. +27 (0)31 205 12 05
Fax +27 (0)31 205 22 65

ZA-2157 Woodmead,
Johannesburg
Woodlands Office Park
141 Western Service Road
Building 14-2nd Floor
Tel. +27 (0)11 236 19 00
Fax +27 (0)11 236 19 13

SPAIN
E-08950 Esplugues de Llobregat
(Barcelona)
Antón Fortuny 14-16 Esc.C 3° 2a
Tel. +34 93 473 32 00
Fax +34 93 473 63 89

E-390010 Santander (Cantabria)
Calle San Fernando
16A Entresuelo H
Tel. +34 94 223 67 55
Tel. +34 94 237 45 81

E-28760 Tres Cantos (Madrid)
Centro Empresarial Euronova
C/Ronda de Poniente, 4
Tel. +34 91 804 32 56
Fax +34 91 804 41 03

SWEDEN
S-21 235 Malmö
Derbyvägen 20
Tel. +46 (0)40 59 21 00
Fax +46 (0)40 59 21 01

S-19 272 Sollentuna
Sjöängsvägen 7
Tel. +46 (0)859 47 02 30
Fax +46 (0)859 47 02 31

SWITZERLAND
CH-8953 Dietikon
Bernstrasse 394
Tel. +41 (0)44 745 61 61
Fax +41 (0)44 745 61 00

CH-1010 Lausanne
Av. des Boveresses 52
Tel. +41 (0)216 54 01 01
Fax +41 (0)216 54 01 00

TURKEY
TR-34742 Istanbul
Perdemsaç Plaza
Bayar Cad. Gülbahar
Sok. No: 17, D: 134 Kozyatagi
Tel. +90 (0)21 64 63 13 52
Fax +90 (0)21 64 63 13 55

UKRAINE
UA-03040 Kiev
Vasilovskaya str. 14
off. 422-423
Tel. +380 44 496 22 26
Fax +380 44 496 22 27

UNITED ARAB EMIRATES
Post Box No: 18657
Warehouse No: FZS1AL06
JAFZA South Zone, Jebel Ali
Dubai, United Arab Emirates
Tel. +971 (4) 886 09 50
Fax +971 (4) 886 09 52

UNITED KINGDOM
South East
Thames House
17 Marlow Road
Maidenhead
Berkshire, SL6 7AA
Tel. +44 (0)16 28 77 07 07
Fax +44 (0)16 28 78 38 11

South West & Wales
12 Interface Business Park
Bincknoll Lane
Wootton Bassett
Wiltshire, SN4 8SY
Tel. +44 (0)17 93 84 99 33
Fax +44 (0)17 93 85 95 55

North
Manchester International
Office Centre, Suite 3E (MIOC)
Styal Road
Manchester, M22 5WB
Tel. +44 (0)16 14 99 34 34
Fax +44 (0)16 14 99 34 74

Scotland
144 West George Street
Glasgow, G2 2HG
Tel. +44 (0)14 13 52 20 50
Fax +44 (0)14 13 52 20 59

EBVElektronik
I An Avnet Company I