III. MAINTENANCE

Maintenance for the RICON PF5000 Series Low-Floor Vehicle Access Ramp consists of a maintenance schedule, troubleshooting guide, and electrical wiring diagram. Routine maintenance and repairs should be performed by authorized Ricon service technicians.

A. MAINTENANCE SCHEDULE

Refer to **Table 3-1**. Under conditions of heavy use (in excess of 20 cycles per day), maintenance should be performed more frequently. Modifying or failing to properly maintain the ramp will void the warranty and may result in unsafe operating conditions for the users. Safety inspections should be performed according to the following intervals:

TABLE 3-1: MAINTENANCE SCHEDULE

SERVICE POINT	DESCRIPTION
DAILY SAFETY CHECK	
General Appearance	• If any abnormal noises exist, notify a Ricon service technician immediately. • Inspect underside of vehicle to verify that nothing is out of the ordinary. • Verify that the bottom surfaces of the side channels are free of debris.
Ramp Mountings and Support Points.	• Verify that all ramp mounting and support points are in proper order and free from damage. • Verify that all mounting bolts are sufficiently tight.
Main Pivot Points	Verify carriage/ramp pivot pins are installed properly, free from damage and locked in position with proper fasteners.
4-MONTH SAFETY CHECK	
Ramp Enclosure	Vacuum inside the ramp enclosure using an industrial vacuum cleaner.
ANNUAL SAFETY CHECK	
Cam Followers	Grease all eight Cam Followers using low temperature grease such as Aeroshell Grease #22 Starfak EP, or equivalent. Grease fittings should be wiped clean prior to grease injection to prevent contamination.
Ball Screw Assembly	Grease Ball Screw using low temperature grease such as Aeroshell Grease #22 Starfak EP, or equivalent.
RAMP IN STOWED POSITION:	
Ramp Mounting and Support Points	• Verify that all ramp support points under vehicle are in proper working order and free from damage. • Verify that all mounting bolts are properly fastened.
DEPLOY RAMP TO FULL EXTENSION:	
General Operation	• Listen for any abnormal noises as the ramp deploys (i.e., grinding or scraping noises). • Carriage stops are in place and stop ramp squarely.
Main Pivots	Verify carriage/platform pivot pins are installed properly, free from damage and locked in position with proper fasteners.
Ramp Points	Verify ramp operates properly during deploy and stow modes without obstruction.
END OF TABLE	

B. TROUBLESHOOTING GUIDE

The troubleshooting guides are designed to provide logical starting points to locate general problems that could occur with the ramp. However, not all possible problems or combinations of problems are listed. The guides do not incorporate routine safety precautions or preliminary procedures and assume that the vehicle battery is fully charged and the battery terminals/connectors are clean and tight. For troubleshooting the ramp, refer to the following sections:

1. RAMP OPERATIONAL TROUBLESHOOTING

TABLE 3-2: OPERATIONAL TROUBLESHOOTING GUIDE

SYMPTOM	POSSIBLE CAUSE	REMEDY
No ramp operation.	Main circuit breaker tripped.	Reset circuit breaker.
	Manufacturer's interlock circuitry.	Check manufacturers interlock circuitry.
	Electrical harness not connected properly.	Verify proper connection of electrical harness to ramp controller.
Enclosure door does not fully close.	Obstruction in door.	Remove obstruction and check for any damage.
	Bent ramp cam pin.	Contact an authorized Ricon service technician for repair.
	Damaged door spring.	Inspect door springs and contact an authorized Ricon service technician for repair if necessary.
	Damaged and/or misaligned enclosure door.	Contact an authorized Ricon service technician for repair.
Excess noise during extend/deploy and/or retract/stow.	Faulty cam follower on traveling frame assembly and/or alignment plate assembly.	Contact an authorized Ricon service technician for repair.
	Debris in enclosure.	Remove debris.
	Improper alignment adjustment of traveling frame.	Contact an authorized Ricon service technician for repair.
	Improper alignment adjustment of drive system.	Contact an authorized Ricon service technician for repair.
Ramp motor operates, ramp does not deploy.	Broken drive belt.	Contact an authorized Ricon service technician for repair.

END OF TABLE

2. ELECTRICAL TROUBLESHOOTING

TABLE 3-3: ELECTRICAL TROUBLESHOOTING GUIDE

SYMPTOM	FAILURE	REMEDY
Ramp will not operate in one direction only.	Contact weld in the motor direction relay.	Replace controller.
Current limit cannot be set high enough, controller goes into current limit when there is no obstruction.	Current sense resistor has been overloaded and burned.	
Catastrophic failure, no functions, lights show erroneous pattern, or no lights at all.	EPROM damage.	
	Supply voltage exceeded 30VDC.	
Ramp will function when bus is moving, light pattern indicates bus is not moving.	Signal from speed sensor indicates the bus is not moving regardless of movement of the bus.	Correct/repair wiring to speed sensor.
No ramp functions work.	Signal indicates the brake is not set regardless of condition of brake.	Most probably the wire between the brake sensor and the controller is broken or nonexistent. Correct/repair wiring to brake sensor.
	Signal indicates bus is moving regardless of condition of bus.	Most probably the wire between the speed sensor and the controller is broken or nonexistent. Correct/repair wiring to speed sensor.
	Supply power not present.	Check vehicle circuit breaker.
		Correct/repair supply wire.
System does not hold vehicle parking brake when ramp is deployed.	Broken or missing signal to the brake hold circuit.	Correct/repair wiring.
	Stow sensor failure (continually provides signal that the ramp is stowed regardless of position of ramp).	Replace stow sensor.

END OF TABLE

3. RAMP CONTROLLER INDICATORS

The electronic ramp controller contains front panel LED's that may be used during electrical troubleshooting.

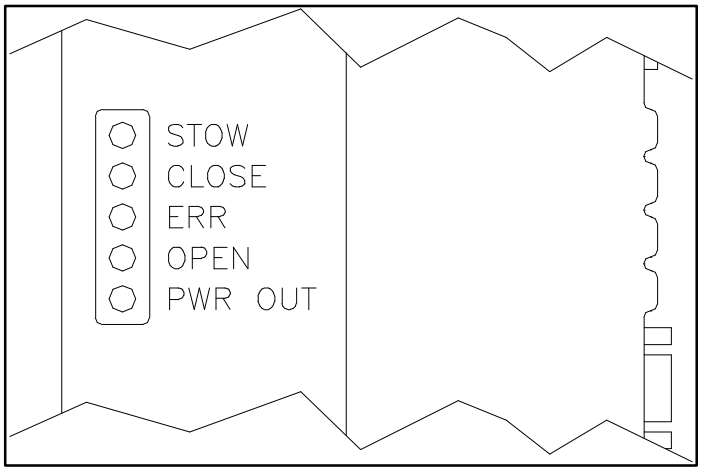

FIGURE 3-1: CONTROLLER INDICATORS

TABLE 3-4: CONTROLLER INDICATOR DESCRIPTIONS		
LED	**COLOR**	**DESCRIPTION**
STOW	Green	Ramp is not stowed.
CLOSE	Yellow	Ramp function switch is in STOW position.
ERR	Red	Fast Flash Rate (0.5-second OFF/ON cycles) = Controller internal error. Slow Flash Rate (1-second OFF/ON cycles) = Ramp is deployed and vehicle is stopped.
OPEN	Yellow	Ramp function switch is in DEPLOY position.
PWR OUT	Green	Sensor supply voltage (regulated +20VDC) is available.
END OF TABLE		

C. RAMP CONTROLLER ADJUSTMENTS

Refer to **Chapter II** of this manual for ramp controller adjustments.

D. RAMP CONTROLLER ELECTRICAL WIRING

1. DIAGRAM COLOR CODES

TABLE 3-5: COLOR CODE DEFINITIONS			
LETTER	**COLOR**	**LETTER**	**COLOR**
BK	Black	R	Red
BL	Blue	VI	Violet
BR	Brown	VI/BK	Violet w/ Black
GN	Green	W	White
GN/BK	Green w/ Black	W/O	White w/ Orange
O	Orange	Y	Yellow
O/BK	Orange w/ Black	Y/BK	Yellow w/ Black
END OF TABLE			

2. ELECTRICAL SIGNAL DESCRIPTIONS

a. Indication of NOT Stowed Output (ST OUT)

The Indication of Stowed Output is located at the DB 9 connector, pin-1. The pin goes to +24 volts direct current (VDC) when the ramp is off of the STOW sensor. The tolerance of the sensor is within approximately ½" of the fully stowed position. The signal is buffered and capable of driving a 250 milliamp (mA) inductive load, such as an automotive relay.

b. Close Overcurrent Output (CL_OV) (Controller part number 18334 only)

The close overcurrent output provided at pin-2 of the DB 9 connector is used to indicate when the system has reached an overcurrent condition in the STOW/retract direction. Overcurrent occurs either when the system encounters a resistance greater than the normal forces generated in travel or when the system comes to the end-of-travel within the enclosure. The signal is a 24-volt pulse approximately 500 milliseconds (ms) in duration. If the function is released, the signal is removed. The opposite function will reset the register that stores the last overcurrent event. The signal will reappear if the STOW function is pressed without pressing the DEPLOY function first.

c. Indication of Stowed Output (ST_Out) (Controller part number 18061 and 27625 only)

The Indication of Stowed Output is located at the DB 9 connector, pin-2. The pin goes to +24 volts direct current (VDC) when the ramp is completely stowed. The tolerance of the sensor is within approximately ½" of the fully stowed position. The signal is buffered and capable of driving a 250 milliamp (mA) inductive load, such as an automotive relay.

d. Vehicle Speed (SPEED) (Controller part number 18061 and 18334 only)

Input to the controller (pin-3) is zero VDC when the bus is moving, and 24VDC when the bus is stopped. When the signal is nonexistent (wire broken), the controller assumes zero VDC (the bus is moving)

e. Vehicle Parking Brake (BRAKE) (Controller part number 18061 and 18334 only)

Input to the controller (pin-4) is zero VDC when the vehicle parking brake is set and 24 VDC when the parking brake is released. When the signal is nonexistent (wire broken), the controller assumes that the parking brake is released.

f. Control Inputs (IN and OUT)

Two control inputs at the DB 9 connector are used. "Close" input (pin-5) is used to stow the ramp and "Open" input (pin-6) is used to deploy the ramp. Both inputs accept signals ranging from +12VDC to +24VDC, referenced to the controller's ground. The controller is provided with pull-down resistors, so the input signal is allowed to float when not being used.

g. Status Indicator Outputs (LED2 and LED1)

The status indicator outputs are from the controller and are used to light the ramp control panel status indicators. LED2 (pin-7) is used to light the indicator GREEN. LED1 (pin-8) lights the indicator RED.

h. Open Overcurrent Output (OP_OV) (Controller Part Number 18334 only)

The open overcurrent output provided at DB 9 connector pin-9, is used to indicate when the system has reached an overcurrent condition in the DEPLOY/extend direction. Overcurrent occurs either when the system encounters a resistance greater than the normal forces generated in travel or when the system comes to the end of travel at the fully deployed position. The signal is 24-volts continuous as long as the button is held. If the function is released, the signal is removed. The opposite function will reset the register that stores the last overcurrent event. The signal will reappear if the DEPLOY function is pressed without pressing the STOW function first.

i. Overcurrent Output (OVC) (Controller Part Number 18061 and 27625 only)

The overcurrent output provided at DB 9 connector pin-9, is used to indicate an overcurrent condition in either the STOW or DEPLOY direction. The signal is 24 volts continuous as long as the function button is depressed. The signal will reappear if the function is depressed again without depressing the opposite function. Pressing the opposite function will reset both the current limit condition and the OVC signal.

j. Power Connections (24V-20A and GND)

Power is inputted through the AMP 10-Pin connector. Power must be 20-30VDC protected with a 20 amp circuit interrupt. Pin 3 is used for the negative controller supply. Pin 1 is used for the positive supply.

k. Motor Connections (MOT- and MOT+)

The motor is connected to the module through the AMP 10-Pin connector, pins-5 and 7. During the DEPLOY function, pin-5 receives negative voltage and pin-7 receives positive voltage. During the ramp STOW function, pin-5 receives positive voltage and pin-7 receives negative voltage.

l. Stow Sensor Input and Power (SEN_IN and +20VREG)

Pin-9 is the controller input from the stow sensor. Pin-10 is a +20VDC regulated output to the stow sensor, only, and should not be used for any other purpose.

3. MANUAL OPERATIONAL FUNCTIONAL DESCRIPTION

The manual operation switch is double-pole, double-throw switch (two switches in the same package, actuated simultaneously) that enables the user to operate the ramp manually. When switched to manual operation it physically breaks the continuity of the motor lead with one pole and sends a signal to hold the parking brake with the other pole. Physically breaking the motor lead enables manual operation even when the power is lost.

When in the manual position, no function will operate the ramp and the vehicle parking brake will not disengage. The ramp can be easily operated by hand. When the switch is in the power position, all functions are available for use. The motor will be shunted; the dynamic braking effect will make it more difficult to back drive the motor and therefore will effectively hold the ramp from moving against anything but very high forces. The parking brake can be released, if no conditions are holding the parking brake.

4. WIRING DIAGRAMS

Refer to **Figures 3-2**, **3-3 and 3-4** on the following pages for ramp electrical wiring diagrams. **Figure 3-3** applies to ramps equipped with controller part number 18061, only. **Figure 3-4** applies to ramps equipped with controller part number 27625 only.

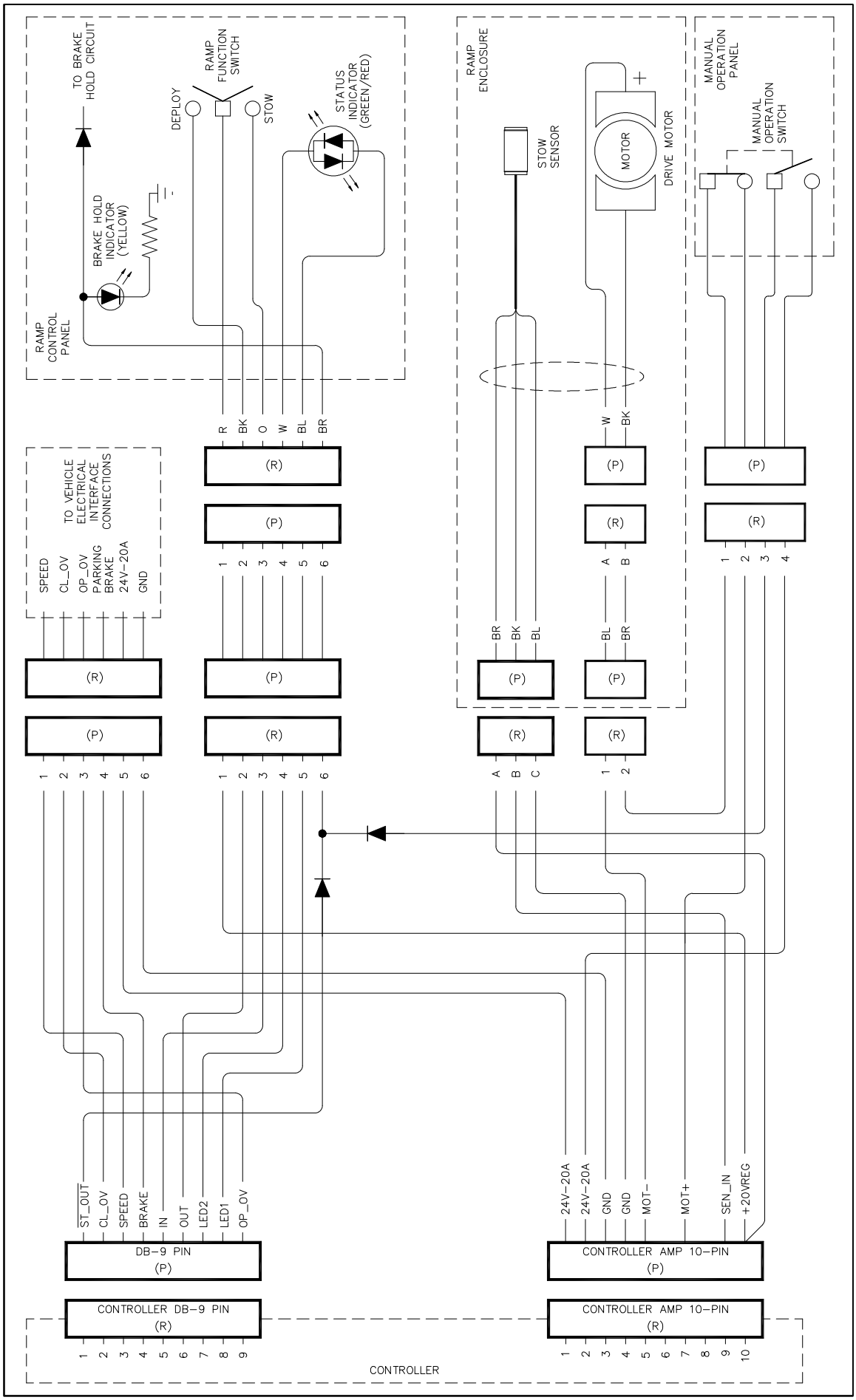

FIGURE 3-2: PF5000 RAMP ELECTRICAL WIRING DIAGRAM

32DPF502.B

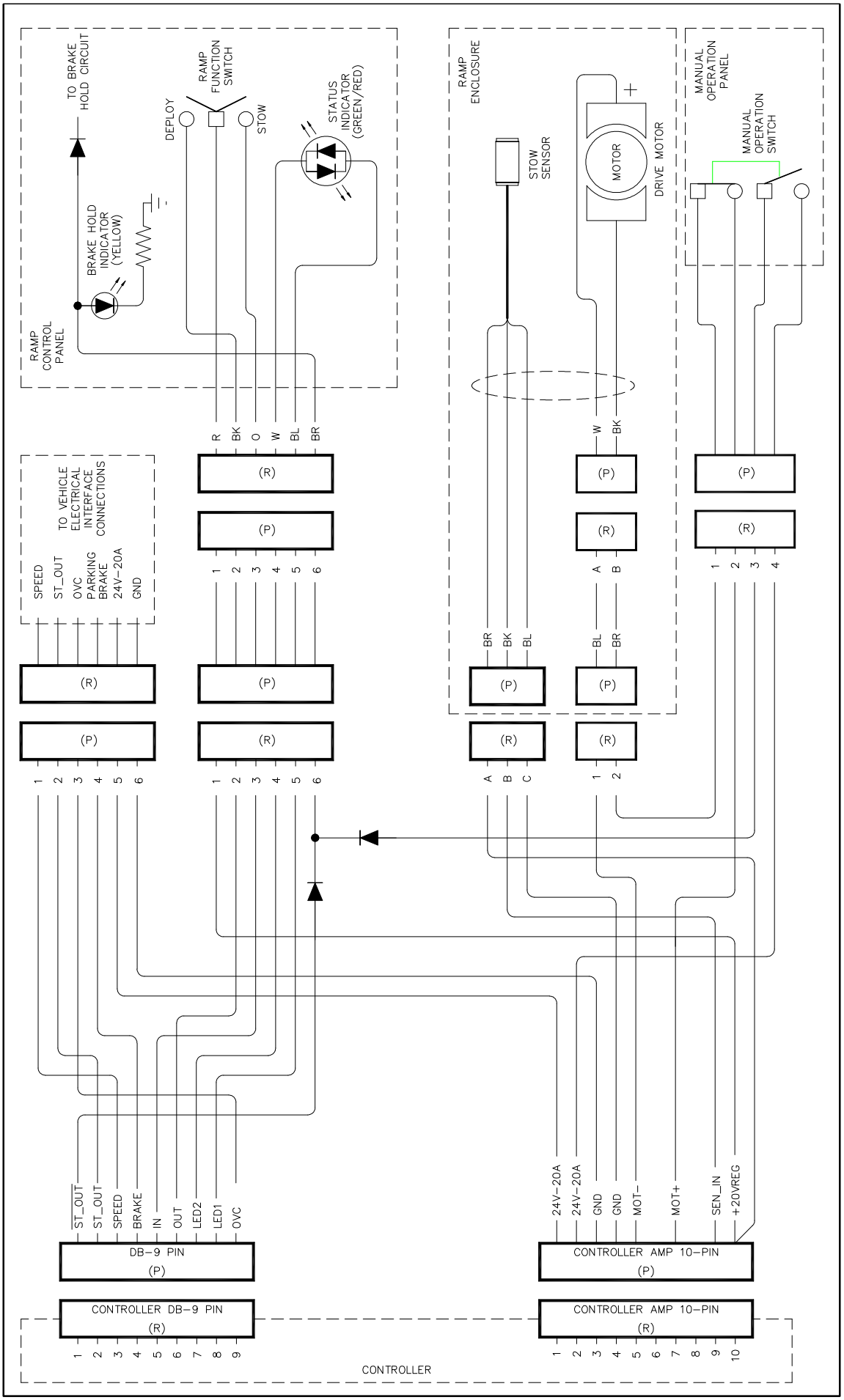

FIGURE 3-3: PF5000 RAMP ELECTRICAL WIRING DIAGRAM; CONTROLLER PART NUMBER 18061 ONLY

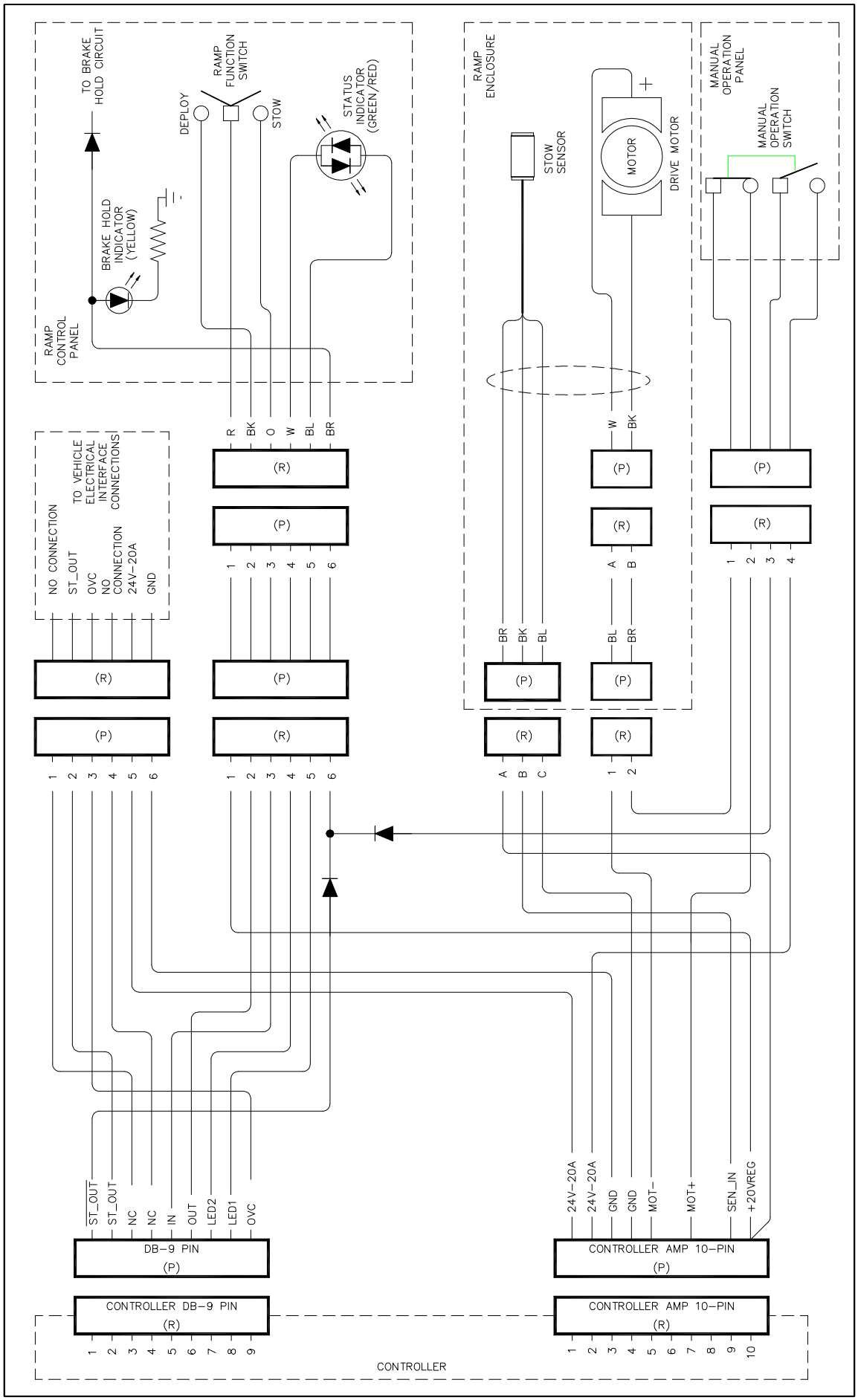

FIGURE 3-4: PF5000 RAMP ELECTRICAL WIRING DIAGRAM; CONTROLLER PART NUMBER 27625 ONLY

This page intentionally left blank.