SIEMENS

SIPROTEC 4

Breaker Management Device 7VK61

V4.7 and higher

Manual

Preface

Open Source Software

Table of Contents

Introduction 1

Functions 2

Mounting and Commissioning 3

Technical Data 4

Ordering Information and Accessories A

Terminal Assignments B

Connection Examples C

Default Settings and Protocol-dependent Functions D

Functions, Settings, Information E

Literature

Glossary

Index

C53000-G1176-C159-5



NOTE

For your own safety, observe the warnings and safety instructions contained in this document, if available.

Disclaimer of Liability

This document has been subjected to rigorous technical review before being published. It is revised at regular intervals, and any modifications and amendments are included in the subsequent issues. The content of this document has been compiled for information purposes only. Although Siemens AG has made best efforts to keep the document as precise and up-to-date as possible, Siemens AG shall not assume any liability for defects and damage which result through use of the information contained herein.

This content does not form part of a contract or of business relations; nor does it change these. All obligations of Siemens AG are stated in the relevant contractual agreements.

Siemens AG reserves the right to revise this document from time to time.

Document version: V04.21.00

Edition: 05.2018

Version of the product described: V4.7 and higher

Copyright

Copyright © Siemens AG 2018. All rights reserved.

The disclosure, duplication, distribution and editing of this document, or utilization and communication of the content are not permitted, unless authorized in writing. All rights, including rights created by patent grant or registration of a utility model or a design, are reserved.

Trademarks

SIPROTEC™, DIGSI™, SIGUARD™, SIMEAS™, and SICAM™ are registered trademarks of Siemens AG. Any unauthorized use is illegal. All other designations in this document can be trademarks whose use by third parties for their own purposes can infringe the rights of the owner.

Preface

Purpose of this Manual

This manual describes the functions, operation, installation, and commissioning of devices 7VK61. In particular, one will find:

- Information regarding the configuration of the scope of the device and a description of the device functions and settings → Chapter 2;
- Instructions for Installation and Commissioning → Chapter 3;
- Compilation of the Technical Data → Chapter 4;
- As well as a compilation of the most significant data for advanced users → Appendix.

General information with regard to design, configuration, and operation of SIPROTEC 4 devices are set out in the */1/ SIPROTEC 4 System Description*.

Target Audience

Protection-system engineers, commissioning engineers, persons entrusted with the setting, testing and maintenance of selective protection, automation and control equipment, and operating personnel in electrical installations and power plants.

Applicability of this Manual

This manual applies to: SIPROTEC 4 Breaker Management Device 7VK61; firmware version V4.7 and higher.

Angaben zur Konformität

CE	This product complies with the directive of the Council of the European Communities on the approximation of the laws of the Member States relating to electromagnetic compatibility (EMC Council Directive 2004/108/EC) and concerning electrical equipment for use within specified voltage limits (Low-voltage directive 2006/95 EC). This conformity is proved by tests conducted by Siemens AG in accordance with the Council Directives in agreement with the generic standards EN61000-6-2 and EN 61000-6-4 for the EMC directive, and with the standard EN 60255-27 for the low-voltage directive. The device has been designed and produced for industrial use. The product conforms with the international standard of the series IEC 60255 and the German standard VDE 0435.

Additional Standards IEEE Std C37.90 (see Chapter 4, Technical Data")

c UL us LISTED IND. CONT. EQ. 69CA

c UL us IND. CONT. EQ.

[ul-schutz-110602-kn, 1, --_--]

Additional Support

For questions about the system, please contact your Siemens sales partner.

Support

Our Customer Support Centre provides a 24-hour service.

Tel:	+49 (180) 524-7000
Fax:	+49 (180) 524-2471
E-Mail:	*support.energy@siemens.com*

Training Courses

Inquiries regarding individual training courses should be addressed to our Training Centre:

Siemens AG
Siemens Power Academy TD

Humboldtstraße 59
90459 Nürnberg
Germany

Tel:	+49 (911) 433-7415
Fax:	+49 (911) 433-7929
E-Mail:	*poweracademy@siemens.com*
Internet:	*www.siemens.com/poweracademy*

Notes on Safety

This document is not a complete index of all safety measures required for operation of the equipment (module or device). However, it comprises important information that must be followed for personal safety, as well as to avoid material damage. Information is highlighted and illustrated as follows according to the degree of danger:



DANGER

DANGER means that death or severe injury **will** result if the measures specified are not taken.

✧ Comply with all instructions, in order to avoid death or severe injuries.



WARNING

WARNING means that death or severe injury **may** result if the measures specified are not taken.

✧ Comply with all instructions, in order to avoid death or severe injuries.



CAUTION

CAUTION means that medium-severe or slight injuries **can** occur if the specified measures are not taken.

✧ Comply with all instructions, in order to avoid moderate or minor injuries.

NOTICE

NOTICE means that property damage **can** result if the measures specified are not taken.

✧ Comply with all instructions, in order to avoid property damage.



NOTE

Important information about the product, product handling or a certain section of the documentation which must be given particular attention.

Qualified Electrical Engineering Personnel

Only qualified electrical engineering personnel may commission and operate the equipment (module, device) described in this document. Qualified electrical engineering personnel in the sense of this manual are people who can demonstrate technical qualifications as electrical technicians. These persons may commission, isolate, ground and label devices, systems and circuits according to the standards of safety engineering.

Proper Use

The equipment (device, module) may be used only for such applications as set out in the catalogs and the technical description, and only in combination with third-party equipment recommended and approved by Siemens.

Problem-free and safe operation of the product depends on the following:

- Proper transport
- Proper storage, setup and installation
- Proper operation and maintenance

When electrical equipment is operated, hazardous voltages are inevitably present in certain parts. If proper action is not taken, death, severe injury or property damage can result:

- The equipment must be grounded at the grounding terminal before any connections are made.
- All circuit components connected to the power supply may be subject to dangerous voltage.
- Hazardous voltages may be present in equipment even after the supply voltage has been disconnected (capacitors can still be charged).
- Operation of equipment with exposed current-transformer circuits is prohibited. Before disconnecting the equipment, ensure that the current-transformer circuits are short-circuited.
- The limiting values stated in the document must not be exceeded. This must also be considered during testing and commissioning.

Typographic and Symbol Conventions

The following text formats are used when literal information from the device or to the device appear in the text flow:

`Parameter Names`

Designators of configuration or function parameters which may appear word-for-word in the display of the device or on the screen of a personal computer (with operation software DIGSI), are marked in bold letters in monospace type style. The same applies to titles of menus.

`1234A`

Parameter addresses have the same character style as parameter names. Parameter addresses contain the suffix **`A`** in the overview tables if the parameter can only be set in DIGSI via the option **Display additional settings**.

`Parameter Options`

Possible settings of text parameters, which may appear word-for-word in the display of the device or on the screen of a personal computer (with operation software DIGSI), are additionally written in italics. The same applies to the options of the menus.

Indications

Designators for information, which may be output by the relay or required from other devices or from the switch gear, are marked in a monospace type style in quotation marks.

Deviations may be permitted in drawings and tables when the type of designator can be obviously derived from the illustration.

The following symbols are used in drawings:

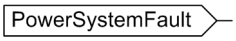

Device-internal logical input signal



Device-internal logical output signal

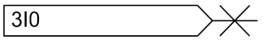

Internal input signal of an analog quantity

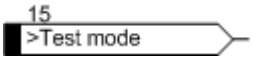

External binary input signal with number (binary input, input indication)

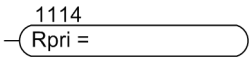

External binary output signal with number (example of a value indication)



External binary output signal with number (device indication) used as input signal

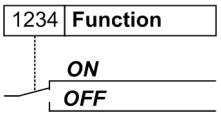

Example of a parameter switch designated **FUNCTION** with address 1234 and the possible settings ***ON*** and ***OFF***

Besides these, graphical symbols are used in accordance with IEC 60617-12 and IEC 60617-13 or similar. Some of the most frequently used are listed below:

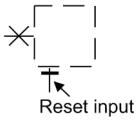

Analog input variable

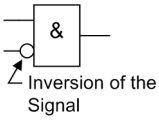

AND-gate operation of input values

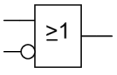

OR-gate operation of input values

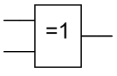

Exclusive OR gate (antivalence): output is active, if only **one** of the inputs is active

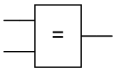

Coincidence gate: output is active, if **both** inputs are active or inactive at the same time

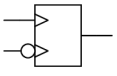

Dynamic inputs (edge-triggered) above with positive, below with negative edge

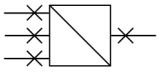

Formation of one analog output signal from a number of analog input signals

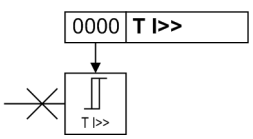

Limit stage with setting address and parameter designator (name)

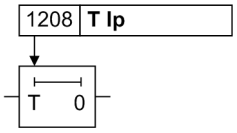

Timer (pickup delay T, example adjustable) with setting address and parameter designator (name)

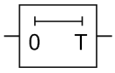

Timer (dropout delay T, example non-adjustable)

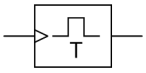

Dynamic triggered pulse timer T (monoflop)

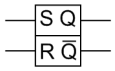

Static memory (SR flipflop) with setting input (S), resetting input (R), output (Q) and inverted output ($\overline{Q}$), setting input dominant

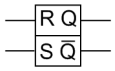

Static memory (RS-flipflop) with setting input (S), resetting input (R), output (Q) and inverted output ($\overline{Q}$), resetting input dominant

Open Source Software

The product contains, among other things, Open Source Software developed by third parties. The Open Source Software used in the product and the license agreements concerning this software can be found in the Readme_OSS. These Open Source Software files are protected by copyright. Your compliance with those license conditions will entitle you to use the Open Source Software as foreseen in the relevant license. In the event of conflicts between Siemens license conditions and the Open Source Software license conditions, the Open Source Software conditions shall prevail with respect to the Open Source Software portions of the software. The Open Source Software is licensed royalty-free. Insofar as the applicable Open Source Software License Conditions provide for it you can order the source code of the Open Source Software from your Siemens sales contact - against payment of the shipping and handling charges - for a period of at least 3 years since purchase of the Product. We are liable for the Product including the Open Source Software contained in it pursuant to the license conditions applicable to the Product. Any liability for the Open Source Software beyond the program flow intended for the Product is explicitly excluded. Furthermore any liability for defects resulting from modifications to the Open Source Software by you or third parties is excluded. We do not provide any technical support for the Product if it has been modified.

Table of Contents

Preface **3**

Open Source Software **9**

1 Introduction **17**

1.1 Overall Operation 18

1.2 Application Scope 20

1.3 Characteristics 22

2 Functions **25**

2.1 General 26

2.1.1 Functional Scope 26
2.1.1.1 Configuration of the Scope of Functions 26
2.1.1.2 Setting Notes 26
2.1.1.3 Settings 27

2.1.2 Device 28
2.1.2.1 Trip-Dependent Indications 28
2.1.2.2 Setting Notes 29
2.1.2.3 Settings 30
2.1.2.4 Information List 30

2.1.3 Power System Data 1 31
2.1.3.1 Setting Notes 32
2.1.3.2 Settings 35

2.1.4 Change Group 36
2.1.4.1 Purpose of the Setting Groups 36
2.1.4.2 Setting Notes 37
2.1.4.3 Settings 37
2.1.4.4 Information List 37

2.1.5 Power System Data 2 37
2.1.5.1 Setting Notes 37
2.1.5.2 Settings 39
2.1.5.3 Information List 40

2.1.6 Oscillographic Fault Records 41
2.1.6.1 Functional Description 41
2.1.6.2 Setting Notes 41
2.1.6.3 Settings 42
2.1.6.4 Information List 42

2.1.7 Ethernet EN100-Module 42
2.1.7.1 Functional Description 42
2.1.7.2 Setting Notes 42
2.1.7.3 Information List 43

2.2 Automatic reclosure function (optional) 44

2.2.1 Functional Description 44

2.2.2 Setting Notes 58

2.2.3 Settings 64

2.2.4 Information List ... 66
2.3 Overcurrent protection (optional) ... 69
2.3.1 General ... 69
2.3.2 Functional Description ... 69
2.3.3 Setting Notes ... 75
2.3.4 Settings ... 80
2.3.5 Information List ... 81
2.4 Synchronism and voltage check (optional) ... 83
2.4.1 Functional Description ... 83
2.4.2 Setting Notes ... 89
2.4.3 Settings ... 94
2.4.4 Information List ... 95
2.5 Under and over-voltage protection (optional) ... 97
2.5.1 Overvoltage Protection ... 97
2.5.2 Undervoltage protection ... 102
2.5.3 Setting Notes ... 107
2.5.4 Settings ... 110
2.5.5 Information List ... 112
2.6 Circuit breaker failure protection (optional) ... 115
2.6.1 Functional Description ... 115
2.6.2 Setting Notes ... 125
2.6.3 Settings ... 128
2.6.4 Information List ... 129
2.7 Monitoring Functions ... 131
2.7.1 Measurement Supervision ... 131
2.7.1.1 Hardware Monitoring ... 131
2.7.1.2 Software Monitoring ... 133
2.7.1.3 Monitoring External Transformer Circuits ... 133
2.7.1.4 Monitoring the Phase Angle of the Positive Sequence Power ... 138
2.7.1.5 Malfunction Reaction ... 140
2.7.1.6 Setting Notes ... 141
2.7.1.7 Settings ... 143
2.7.1.8 Information List ... 144
2.7.2 Trip circuit supervision ... 144
2.7.2.1 Functional Description ... 144
2.7.2.2 Setting Notes ... 147
2.7.2.3 Settings ... 147
2.7.2.4 Information List ... 147
2.8 Function Control and Circuit Breaker Test ... 149
2.8.1 Function Control ... 149
2.8.1.1 Closure Detection ... 149
2.8.1.2 Detection of the Circuit Breaker Position ... 151
2.8.1.3 Open Pole Detektor ... 153
2.8.1.4 Pickup Logic of the Entire Device ... 155
2.8.1.5 Tripping Logic of the Entire Device ... 155
2.8.2 Circuit breaker trip test ... 158
2.8.2.1 Function Description ... 159
2.8.2.2 Information List ... 159

2.9 Auxiliary Functions....161
2.9.1 Processing of Messages....161
2.9.1.1 Functional Description....161
2.9.2 Statistics....164
2.9.2.1 Functional Description....164
2.9.2.2 Setting Notes....164
2.9.2.3 Information List....164
2.9.3 Measurement....165
2.9.3.1 Functional Description....165
2.9.3.2 Information List....166
2.9.4 Energy....167
2.9.4.1 Energy Metering....167
2.9.4.2 Setting Notes....167
2.9.4.3 Information List....167
2.10 Command Processing....169
2.10.1 Control Authorization....169
2.10.1.1 Type of Commands....169
2.10.1.2 Sequence in the Command Path....169
2.10.1.3 Interlocking....170
2.10.1.4 Information List....173
2.10.2 Control Device....173
2.10.2.1 Functional Description....173
2.10.2.2 Information List....174
2.10.3 Process Data....174
2.10.3.1 Functional Description....174
2.10.3.2 Information List....175
2.10.4 Protocol....175
2.10.4.1 Information List....175

3 Mounting and Commissioning....177

3.1 Mounting and Connections....178
3.1.1 Configuration Information....178
3.1.2 Hardware Modifications....182
3.1.2.1 General....182
3.1.2.2 Disassembly....183
3.1.2.3 Switching Elements on Printed Circuit Boards....186
3.1.2.4 Interface Modules....195
3.1.2.5 Reassembly....199
3.1.3 Mounting....199
3.1.3.1 Panel Flush Mounting....199
3.1.3.2 Rack and Cubicle Mounting....200
3.1.3.3 Panel Mounting....202
3.2 Checking Connections....203
3.2.1 Checking Data Connections of Serial Interfaces....203
3.2.2 Checking the System Connections....205
3.3 Commissioning....208
3.3.1 Test Mode/Transmission Block....209
3.3.2 Checking the Time Synchronisation Interface....209
3.3.3 Test system interface....209
3.3.4 Checking the switching states of the binary Inputs/Outputs....211
3.3.5 Checking for Breaker Failure Protection....213
3.3.6 Current, Voltage, and Phase Rotation Testing....215

3.3.7 Directional Check with Load Current ... 216
3.3.8 Polarity Check for the Voltage Input U_4 ... 217
3.3.9 Polarity Check for the Current Input I_4 ... 219
3.3.10 Measuring the Operating Time of the Circuit Breaker ... 219
3.3.11 Check of the Signal Transmission for Breaker Failure Protection and/or End Fault Protection ... 220
3.3.12 Testing User-defined Functions ... 220
3.3.13 Trip and Close Test with the Circuit Breaker ... 220
3.3.14 Switching Test of the Configured Operating Equipment ... 221
3.3.15 Triggering Oscillographic Recording for Test ... 221
3.4 Final Preparation of the Device ... 223

4 Technical Data ... 225
4.1 General ... 226
4.1.1 Analogue Inputs and Outputs ... 226
4.1.2 Auxiliary Voltage ... 226
4.1.3 Binary Inputs and Outputs ... 227
4.1.4 Communication Interfaces ... 228
4.1.5 Electrical Tests ... 231
4.1.6 Mechanical Tests ... 233
4.1.7 Climatic Stress Tests ... 233
4.1.8 Deployment Conditions ... 234
4.1.9 Construction ... 234
4.2 Automatic reclosure function (optional) ... 235
4.3 Overcurrent protection (optional) ... 236
4.4 Synchronism and voltage check (optional) ... 243
4.5 Under and over-voltage protection (optional) ... 244
4.6 Circuit breaker failure protection (optional) ... 247
4.7 Monitoring Functions ... 248
4.8 User-defined Functions (CFC) ... 250
4.9 Auxiliary Functions ... 254
4.10 Dimensions ... 256
4.10.1 Panel Flush Mounting or Cubicle Mounting (housing size $^1/_3$) ... 256
4.10.2 Panel Flush Mounting or Cubicle Mounting (housing size $^1/_2$) ... 257
4.10.3 Panel surface mounting (housing size $^1/_3$) ... 258
4.10.4 Panel surface mounting (housing size $^1/_2$) ... 258

A Ordering Information and Accessories ... 259
A.1 Ordering information MLFB ordering code ... 260
A.2 Accessories ... 262

B Terminal Assignments ... 265
B.1 Housing for Panel Flush or Cubicle Mounting ... 266
B.2 Housing for Panel Surface Mounting ... 268

C Connection Examples ... 271
C.1 Current Transformer Connection Examples ... 272

C.2 Voltage Transformer Connection Examples ... 273

D Default Settings and Protocol-dependent Functions ... 277

D.1 LEDs ... 278
D.2 Binary input default settings ... 279
D.3 Binary output default settings ... 280
D.4 Function key default settings ... 281
D.5 Default Display ... 282
D.6 Pre-defined CFC Charts ... 283
D.7 Protocol-dependent Functions ... 284

E Functions, Settings, Information ... 285

E.1 Functional Scope ... 286
E.2 Settings ... 287
E.3 Information List ... 308
E.4 Group Indications ... 342
E.5 Measured Values ... 343

Literature ... 345

Glossary ... 347

Index ... 357

1 Introduction

The SIPROTEC 4 device 7VK61 is introduced in this chapter. The device is presented in its application, characteristics, and functional scope.

1.1	Overall Operation	18
1.2	Application Scope	20
1.3	Characteristics	22

1.1 Overall Operation

The digital breaker management relay SIPROTEC 4 7VK61 is equipped with a powerful microprocessor system. All tasks are processed fully digitally, from the acquisition of measured values up to sending commands to the circuit breakers. *Figure 1-1* shows the basic structure of the 7VK61.

Analog Inputs

The measuring inputs (MI) transform the currents and voltages from the instrument transformers and match them to the internal signal levels for processing in the device. The device has 4 current inputs and 4 voltage inputs. Three current inputs are provided for measuring the phase currents, a further measuring input (I_4) can be configured to detect the earth current (CT starpoint) or a separate earth current transformer. The analog input quantities are passed on to the input amplifiers (IA).

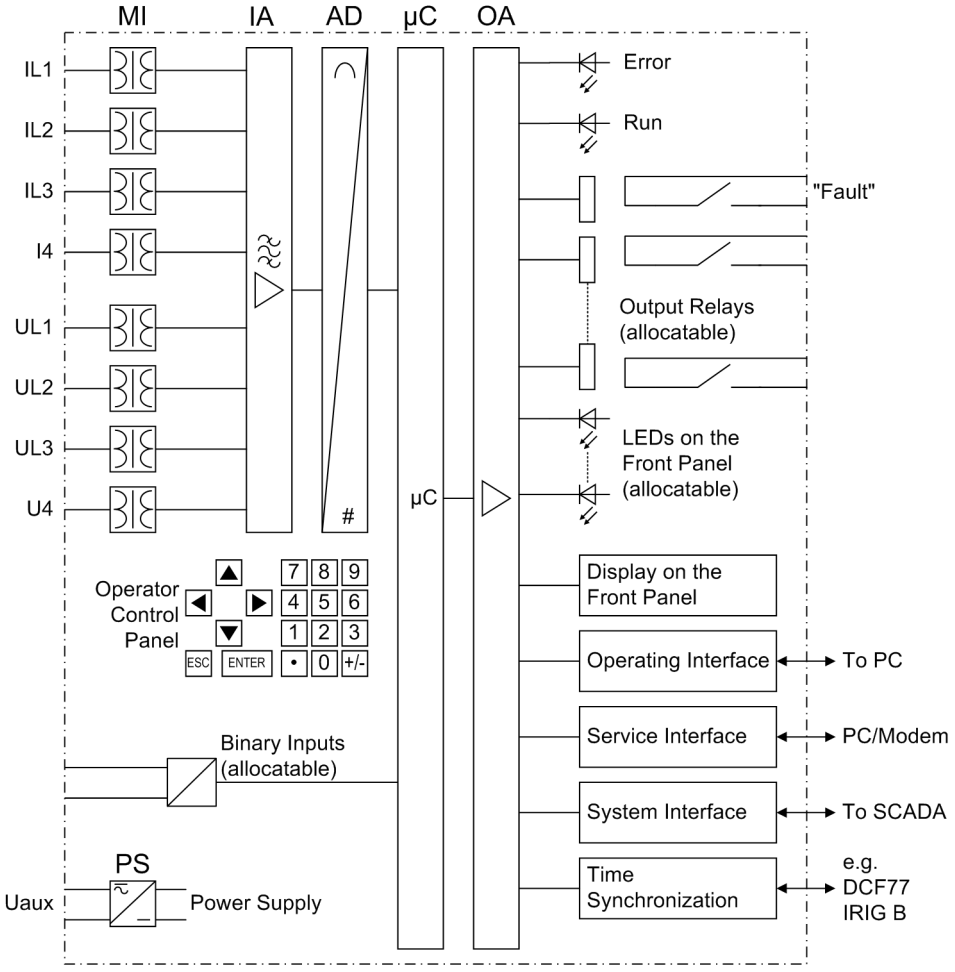

[hw-struktur-7vk61-oz-251102, 1, en_GB]

Figure 1-1 Hardware-Struktur des Breaker Management Devicees 7VK61

A voltage measuring input is provided for each phase-earth voltage. A further voltage input (U_4) may be selected to measure either the displacement voltage, or the additional voltage for synchronism and voltage check or for any other voltage U_X (for overvoltage protection). The analogue values are transferred to the IA input amplifier group.

The input amplifier group IA provides high-resistance termination for the analog input quantities. It consists of filters that are optimized for measured value processing with regard to bandwidth and processing speed.

The AD analog-to-digital converter group contains analog/digital converters and memory chips for data transfer to the microcomputer system.

Microcomputer System

Apart from processing the measured values, the microcomputer system µC also executes the actual protection and control functions. This especially includes:

- Filtering and conditioning of the measured signals
- Continuous monitoring of the measured quantities
- Monitoring of the pickup conditions for the individual protection functions
- Monitoring of limit values and time sequences
- Control of signals for logical functions
- Reaching trip and close command decisions
- Recording of messages, fault data and fault values for analysis
- Administration of the operating system and its functions, e.g. data storage, realtime clock, communication, interfaces, etc.

The information is provided via output amplifier OA.

Binary Inputs and Outputs

Binary inputs from and outputs to the computer system are routed via the I/O modules (inputs and outputs). The computer system obtains information from the system (e.g remote resetting) or from the external equipment (e.g. blocking commands). Outputs are commands that are issued to the switching devices and messages for remote signaling of important events and states.

Front Elements

LEDs and an LC display provide information on the function of the device and indicate events, states and measured values.

Integrated control and numeric keys in conjunction with the LCD facilitate local communication with the device. Thus, all information of the device, e.g. configuration and setting parameters, operating and fault messages, and measured values can be retrieved or changed (see also chapter 2 and SIPROTEC 4 System Description).

Serial Interfaces

The serial operator interface in the front cover enables communication with a personal computer when using the DIGSI operating program. This allows all device functions to be handled conveniently.

The serial service interface can also be used for communication with a personal computer using DIGSI. This port is especially well suited for a permanent connection of the devices to the PC or for operation via a modem.

All device data can be transmitted to a control center through the serial system interface. Various protocols and physical arrangements are available for this interface to suit a particular application.

An additional interface is provided for time synchronization of the internal clock through external synchronization sources.

Further communication protocols can be realized via additional interface modules.

Power Supply

The functional units described are powered by a power supply, PS, with adequate power in the different voltage levels. Brief supply voltage dips which may occur during short circuits in the auxiliary voltage supply of the substation, are usually bridged by a capacitor (see also Technical Data, Section *4.1 General*).

1.2 Application Scope

The 7VK61 breaker management relay is a multi-purpose starting and control device for automatic and manual closing of circuit breakers in electrical networks of all voltage levels.

The automatic reclose function may be used on overhead lines for single-pole, three-pole or single- and three-pole automatic reclosure as well as multi-shot automatic reclosure. The adaptive dead times can be set individually for single-pole, three-pole auto-reclosure and for additional (up to 8) reclose cycles.

Before reclosure after three-pole tripping, the validity of the reclosure can be checked by synchronism check by the device (can be ordered optionally). Alternatively, the de-energization of the line or of the busbar can be checked. If desired, asynchronous energization is also possible. In this case, the device calculates the moment of the energization command so that the two voltages at busbar and feeder are in phase the instant the circuit-breaker poles make contact.

The circuit breaker must be suitable for auto-reclosing. For single-pole auto-reclosure the poles must be individually controllable. The device considers whether the circuit breaker is ready for a trip and close cycle and its position - provided this information is supplied by the circuit breaker. The breaker recovery time can be monitored. During single-pole auto-reclosure the relay can either process the parallel connection or the series connection or both connections of the auxiliary contacts at the circuit breaker poles. The relay is furthermore capable of processing the auxiliary contact of each pole. But generally the relay can operate without such information from the circuit breaker.

7VK61 can work together with static and digital protection equipment requiring only pickup and trip operations from them. For single-pole auto-reclosure the trip signals must either be distinguished as to whether they are single-pole or three pole or they must be transmitted to the relay for each pole separately. In the event of three-pole auto-reclosure alone a general trip signal is sufficient.

Protective Functions

The 7VK61 features the following basic functions:

- Auto-Reclose function
- Synchronism and Voltage Check
- Circuit Breaker Failure Protection
- Under/Overvoltage Protection
- Backup overcurrent

Control Functions

The device is equipped with control functions which operate, close and open, switchgear devices via control keys, the system interface, binary inputs and a PC with DIGSI software. The status of the primary equipment can be transmitted to the device via auxiliary contacts connected to binary inputs. The present status (or position) of the primary equipment can be displayed on the device, and used for interlocking or plausibility monitoring. The number of the devices to be switched is limited by the binary inputs and outputs available in the device or the binary inputs and outputs allocated for the switch position feedbacks. Depending on the mode of operation, one binary input (single point indication) or two binary inputs (double point indication) can be used. The capability of switching primary equipment can be restricted by appropriate settings for the switching authority (remote or local), and by the operating mode (interlocked/non-interlocked, with or without password validation). Interlocking conditions for switching (e.g. switchgear interlocking) can be established using the integrated userdefined logic.

Indications and Measured Values; Fault Recording

The operational indications provide information about conditions in the power system and the device. Measurement quantities and values that are calculated can be displayed locally and communicated via the serial interfaces.

Device messages can be assigned to a number of LEDs on the front panel (programmable), can be externally processed via output contacts (programmable), linked with user-definable logic functions and/or issued via serial interfaces (see Communication below).

During a fault (system fault) important events and changes in conditions are saved in fault logs. Instantaneous fault values are also saved in the device and may be analyzed at a later time.

Communication

Serial interfaces are available for the communication with operating, control and memory systems.

A 9-pin DSUB socket on the front panel is used for local communication with a personal computer. By means of the SIPROTEC 4 operating software DIGSI, all operational and evaluation tasks can be executed via this operator interface, such as specifying and modifying configuration parameters and settings, configuring user-specific logic functions, retrieving operational and fault messages and measured values, reading out and displaying fault recordings, inquiring device conditions and measured values, issuing control commands.

To establish an extensive communication with other digital operating, control and memory components the device may be provided with further interfaces depending on the order variant.

The service interface can be operated via the RS232 or RS485 interface and also allows communication via modem. For this reason, remote operation is possible via PC and the DIGSI operating software, e.g. to operate several devices via a central PC.

The system interface is used for central communication between the device and a control center. It can be operated through the RS232, the RS485 or the FO port. Several standardized protocols are available for data transmission. An EN 100 module allows integrating the devices into 100 MBit Ethernet communication networks of the process control and automation system, using IEC 61850 protocols. In parallel to the link with the process control and automation system, this interface can also handle DIGSI communication and inter-relay communication using GOOSE messaging.

Another interface is provided for the time synchronization of the internal clock via external synchronization sources (IRIG-B or DCF77).

1.3 Characteristics

General Features

- Powerful 32-bit microprocessor system
- Complete digital processing of measured values and control, from the sampling and digitizing of the measure quantities up to the closing and tripping commands to the circuit breakers
- Complete galvanic separation and interference immunity of the internal processing circuits from the measurement, control, and power supply circuits by analog input transducers, binary inputs and outputs and the DC/DC or AC/DC converters
- Simple device operation using the integrated operator panel or a connected personal computer with operator guidance
- Storage of fault indications and instantaneous values for fault recording

Automatic reclosure function (optional)

- For reclosure after 1-pole, 3-pole or 1-pole and 3-pole tripping
- Single or multiple reclosure (up to eight reclosure attempts)
- With separate action time setting for the first 4 reclose attempts, optionally without action times
- With separate dead times after 1-pole and 3-pole tripping, separate for the first four reclosure attempts
- Controlled optionally by protection pickup with separate dead times after 1-pole , 2-pole or 3-pole pickup
- Optionally with adaptive dead time, reduced dead time and dead line check

Synchronism and voltage check (optional)

- Verification of the synchronous conditions before reclosing after three-pole tripping
- Fast measurement of the voltage difference U_{diff}, the phase angle difference φ_{diff} and the frequency difference f_{diff}
- Alternatively, check of the de-energized state before reclosing
- Closing at asynchronous system conditions with consideration of the CB closing time to achieve system re-connection when voltages are in phase
- Settable minimum and maximum voltage
- Verification of the synchronous conditions or de-energized state before manual closing of the circuit breaker is possible with separate setting thresholds and states
- Phase angle compensation for voltage measurement behind a transformer
- Measuring voltages optionally phase-phase or phase-earth

Time Overcurrent Protection (optional, available with breaker failure protection)

- Two definite time stages (DT) and one inverse time stage (IDMT), each for phase currents and earth current
- For inverse-time overcurrent protection select from various characteristics based on several standards
- Blocking capability e.g. for reverse interlocking with any stage
- Instantaneous tripping by any stage when switching onto a fault
- Additional stage, e.g. stub protection, for fast tripping of faults between the current transformer and line isolator (when the isolator switching status feedback is available); particularly well suited to substations with $1^1/_2$ circuit breaker arrangements.

Circuit Breaker Failure Protection (optional)

- With definite time current stages for monitoring the current flow through every pole of the circuit breaker
- Separate pickup thresholds for phase and earth currents
- Independent timers for single-pole and three-pole tripping
- Start by trip command of every internal protection function
- Start by external trip functions possible
- Single-stage or two-stage
- Short dropout and overshoot times

Voltage Protection (optional)

- Overvoltage and undervoltage detection with different stages
- Two overvoltage stages for the phase-earth voltages
- Two overvoltage stages for the phase-phase voltages
- Two overvoltage stages for the positive sequence voltage
- Two overvoltage stages for the negative sequence voltage
- Two overvoltage stages for the zero sequence voltage or any other single-phase voltage
- Settable dropout to pickup ratios
- Two undervoltage stages for the phase-earth voltages
- Two undervoltage stages for the phase-phase voltages
- Two undervoltage stages for the positive sequence voltage
- Settable current criterion for undervoltage protection functions

User-defined Logic Functions (CFC)

- Freely programmable combination of internal and external signals for the implementation of user-defined logic functions
- All typical logic functions
- Time delays and limit value inquiries

Command Processing

- Switchgear can be switched on and off manually via local control keys, the programmable function keys on the front panel, via the system interface (e.g. by SICAM or LSA), or via the operator interface (using a personal computer and the operating software DIGSI)
- Feedback on switching states via the circuit breaker auxiliary contacts (for commands with feedback)
- Monitoring of the circuit breaker position and of the interlocking conditions for switching operations.

Monitoring Functions

- Availability of the device is greatly increased because of self-monitoring of the internal measurement circuits, power supply, hardware and software
- Monitoring of the current and voltage transformer secondary circuits by means of summation and symmetry checks
- Trip circuit supervision
- Checking for the measured direction and the phase sequence.

Additional Functions

- Battery buffered real time clock, which may be synchronised via a synchronisation signal (e.g. DCF77, IRIGB via satellite receiver), binary input or system interface
- Continuous calculation and display of measured quantities on the front display.
- Fault event memory (trip log) for the last eight network faults (faults in the power system), with real time stamps
- Fault recording and data transfer for fault recording for a maximum time range of approx. 15 seconds
- Switching statistics: Counting of the trip and close commands issued by the device, as well as recording of the fault current data and accumulation of the interrupted fault currents
- Communication with central control and memory components possible via serial interfaces (depending on the options ordered), optionally via RS232, RS485, modem connection or fibre optic cable
- Commissioning aids such as connection and direction checks as well as circuit breaker test functions

2 Functions

This chapter describes the individual functions of the SIPROTEC 4 device 7VK61. It shows the setting possibilities for each function in maximum configuration. Guidelines for establishing setting values and, where required, formulae are given.

Based on the following information, it can also be determined which of the provided functions should be used.

2.1	General	26
2.2	Automatic reclosure function (optional)	44
2.3	Overcurrent protection (optional)	69
2.4	Synchronism and voltage check (optional)	83
2.5	Under and over-voltage protection (optional)	97
2.6	Circuit breaker failure protection (optional)	115
2.7	Monitoring Functions	131
2.8	Function Control and Circuit Breaker Test	149
2.9	Auxiliary Functions	161
2.10	Command Processing	169

2.1 General

A few seconds after the device is switched on, the initial display appears in the LCD. A selection of measured values is displayed.

Configuration of the device functions are made via the DIGSI software from your PC. The procedure is described in detail in the SIPROTEC 4 System Description. Entry of password No. 7 (for setting modification) is required to modify configuration settings. Without the password, the settings may be read, but may not be modified and transferred to the device.

The function parameters, i.e. settings of function options, threshold values, etc., can be entered via the keypad and display on the front of the device, or by means of a personal computer connected to the front or service interface of the device utilizing the DIGSI software package. The level 5 password (individual parameters) is required.

2.1.1 Functional Scope

2.1.1.1 Configuration of the Scope of Functions

The 7VK61 relay contains a series of protective and additional functions. The hardware and firmware provided is designed for this scope of functions. In addition, the command functions can be matched to the system conditions. Individual functions can be activated or deactivated during the configuration procedure. The interaction of functions may also be modified e.g., the reclosing function can be implemented with or without synchronization. If a function is not required, it can be deactivated during configuration.

The available protection functions and additional functions can be configured as ***Enabled*** or ***Disabled***. For some functions, a choice between several options is possible which are described below.

Functions configured as ***Disabled*** are not processed by the 7VK61. There are no indications, and corresponding settings (functions, limit values) are not displayed during setting.



NOTE

The functions and default settings available depend on the device version ordered.

2.1.1.2 Setting Notes

Configuring the functional scope

The scope of functions with the available options is set in the **Functional Scope** dialog box to match plant requirements.

Most settings are self-explanatory. Besonderheiten are described below.

Special Cases

If use of the setting group changeover function is desired, address 103 **Grp Chge OPTION** should be set to ***Enabled***. In this case, up to four different groups of settings may be changed (see also Section *2.1.4 Change Group*), quickly and easily during device operation. With the setting ***Disabled*** only one parameter group is available.

Address 106 **VT CONNECTION** determines how the voltage transformers are connected. **VT CONNECTION** = ***3phase*** implies that the three phase voltages are connected in wye connection. **VT CONNECTION** = ***1phase*** is selected, if the device is connected to only **one** voltage transformer. In this case, the voltage connected to voltage input U_4 is always interpreted as the voltage UU_{sy2} which is to be synchronized. Parameter 210 **U4 transformer** is then invariably set to ***Usy2 transf.*** and excludes other setting options. The parameter 212 **Usy2 connection** is then hidden. The setting **VT CONNECTION** = ***NO*** hides all voltage-relevant functions and parameters.

Parameter 107 **CT CONNECTION** is set to configure the current transformer connection. If the default setting **CT CONNECTION** = ***YES*** is active, all current-induced functions (current criterion of voltage protection, line status detection, measurements of currents and power, current-induced measured value monitoring) are

operational. The setting **CT CONNECTION** = ***NO*** allows the device to be operated without any current transformer connection; all current-induced functions and parameters are then hidden.

Address 110 **Trip mode** is only valid for devices that can trip single-pole or three-pole. Set ***1-/3pole*** to also enable single-pole tripping, i.e. if you want to utilize single-pole or single-pole/three-pole automatic reclosure. This requires that an internal automatic reclosure function exists or that an external reclosing device is used. Furthermore, the circuit breaker must be capable of single-pole tripping.

All functions are set to ***Disabled*** by default. This has no effect on the presetting of LEDs, binary inputs and binary outputs.



NOTE

If you have changed address 110, save your changes first via **OK** and reopen the dialog box since the other setting options depend on the selection in address 110.

If the device features an automatic reclosing function, address 133 and 134 are of importance. Automatic reclosure is only permitted for overhead lines. It must not be used in any other case. If the protected object consists of a combination of overhead lines and other equipment (e.g. overhead line in unit with a transformer or overhead line/cable), reclosure is only permissible if it can be ensured that it can only take place in the event of a fault on the overhead line. If no automatic reclosing function is desired for the feeder at which 7VK61operates, or if an external device is used for reclosure, set address 133 **Auto Reclose** to ***Disabled***.

Otherwise set the number of desired reclosing attempts there. You can select ***1 AR-cycle*** to ***8 AR-cycles***. You can also set ***ADT***(adaptive dead times); in this case the behavior of the automatic reclosure function is determined by the cycles of the remote end. The number of cycles must however be configured at least in one of the line ends which must have a reliable infeed. The other end — or other ends, if there are more than two line ends — may operate with adaptive dead time. Section provides detailed information on this topic *2.2 Automatic reclosure function (optional)* .

The **AR control mode** at address 134 allows a total of four options. On the one hand, it can be determined whether the auto reclose cycles are carried out according to the fault type detected by the **pickup** of the starting protection function(s) (only for three-pole tripping) or according to the type of **trip command**. On the other hand, the automatic reclosure function can be operated **with** or **without** action time.

The setting ***Trip with T-action / Trip without T-action ...*** (default setting = Trip with T-action) is preferred if 1-polige or 1-/3-polige auto reclose cycles are provided for and possible. In this case, different dead times (for every AR cycle) are possible after 1-pole tripping and after 3-pole tripping. The protection function that issues the trip command determines the type of trip: 1-pole or 3-pole. The dead time is controlled dependent on this.

The setting **PICKUP.** ... (With PICKUP ...) is only possible and visible, when only 3-pole tripping should occur, i.e., only 3-pole tripping is configured (address 110 **Trip mode** = ***3pole only***, see above). In this case you can set different dead times for the auto-reclose cycles following 1-, 2- and 3-phase. The decisive factor here is the **pickup** situation of the protective functions at the instant the trip command disappears. This control mode enables also the dead times to be made dependent on the type of fault in the case of three-pole reclosure cycles. Tripping is always three-pole.

The setting ***... and tact*** (with ... action time) provides an action time for every reclose cycle. The action time is started by a general pickup of all protection functions. If no trip command is present before the action time expires, the corresponding reclosure cycle is not carried out. Section provides detailed information on this topic *2.2 Automatic reclosure function (optional)* . This setting is recommended for time-graded protection. If the protection function which is to operate with automatic reclosure, does not have a general pickup signal for starting the action times, select ***Trip without T-action...*** (without action time).

For the trip circuit supervision set at address 140 **Trip Cir. Sup.** the number of trip circuits to be monitored: ***1 trip circuit***, ***2 trip circuits*** or ***3 trip circuits***, unless you omit it ***Disabled***).

2.1.1.3 Settings

Addr.	Parameter	Setting Options	Default Setting	Comments
103	Grp Chge OPTION	Disabled Enabled	Disabled	Setting Group Change Option

Addr.	Parameter	Setting Options	Default Setting	Comments
106	VT CONNECTION	3phase 1phase NO	3phase	Voltage transformer connection
107	CT CONNECTION	YES NO	YES	Current transformer connection
110	Trip mode	3pole only 1-/3pole	3pole only	Trip mode
126	Back-Up O/C	Disabled TOC IEC TOC ANSI TOC IEC /w 3ST	Disabled	Backup overcurrent
133	Auto Reclose	1 AR-cycle 2 AR-cycles 3 AR-cycles 4 AR-cycles 5 AR-cycles 6 AR-cycles 7 AR-cycles 8 AR-cycles ADT Disabled	Disabled	Auto-Reclose Function
134	AR control mode	Pickup w/ Tact Pickup w/o Tact Trip w/ Tact Trip w/o Tact	Trip w/ Tact	Auto-Reclose control mode
135	Synchro-Check	Disabled Enabled	Disabled	Synchronism and Voltage Check
137	U/O VOLTAGE	Disabled Enabled	Disabled	Under / Overvoltage Protection
139	BREAKER FAILURE	Disabled Enabled enabled w/ 3I0>	Disabled	Breaker Failure Protection
140	Trip Cir. Sup.	Disabled 1 trip circuit 2 trip circuits 3 trip circuits	Disabled	Trip Circuit Supervision

2.1.2 Device

The device requires some general information. This may be, for example, the type of indication to be issued in the event a power system fault occurs.

2.1.2.1 Trip-Dependent Indications

Spontaneous Fault Messages

After a fault, the essential fault data spontaneously appear on the device display. Under address 610 **FltDisp.LED/LCD** you can select whether the spontaneous fault indications are updated in every case of fault (***Target on PU***) or only in faults with tripping (***Target on TRIP***).

For devices with graphic display, you can specify in address 615 **Spont. FltDisp.** whether a spontaneous fault message appears automatically on the display (***YES***) or not (***NO***). For devices with text display such indications will appear anyway after a power system fault.

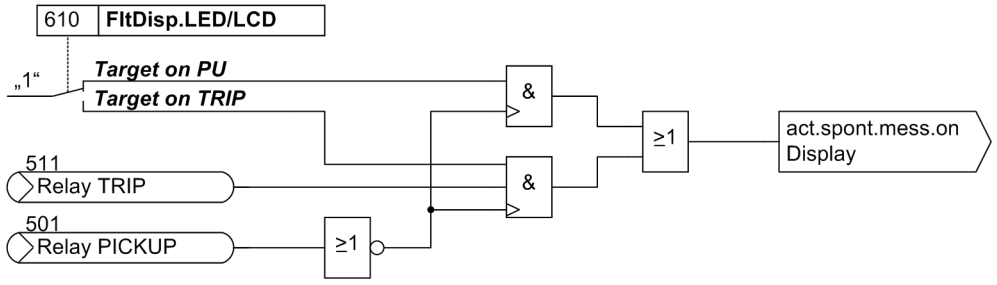

[logik-spondanmeld-display-081024, 1, en_GB]

Figure 2-1 Generation of spontaneous fault indications on the display

Reset of Stored LED / Relays

Pickup of a new protection function generally deletes all stored LED/relays so that only the information of the latest fault is displayed at a time. The deletion of the stored LED and relays can be inhibited for a settable time under address 625 **T MIN LED HOLD**. Any information occurring during this time are then combined with a logical OR function.

Under address 610 **FltDisp.LED/LCD** also the information of the latest fault stored on LED and relays can be deleted with the setting (***Target on TRIP***) unless this fault has lead to a trip command of the device.

NOTE

Setting the address 610 **FltDisp.LED/LCD** to (***Target on TRIP***) only makes sense if address 625 **T MIN LED HOLD** is set to 0.

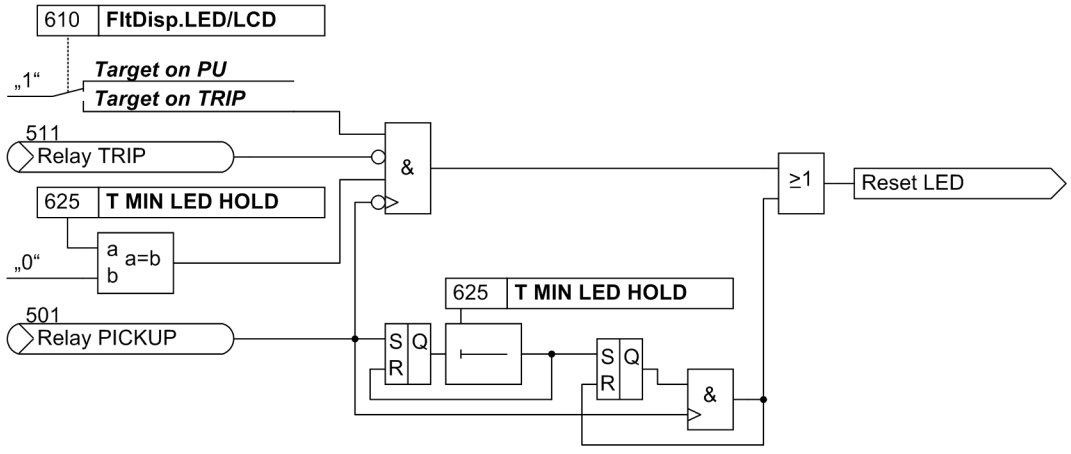

[logik-ruecksetz-gesp-led-081024, 1, en_GB]

Figure 2-2 Creation of the reset command for saved LED/relays

2.1.2.2 Setting Notes

Fault Annunciations

Pickup of a new protection function generally turns off any previously set displays, so that only the latest fault is displayed at any one time. It can be selected whether the stored LED displays and the spontaneous indications on the display appear upon renewed pickup, or only after a renewed trip signal is issued. In order to enter the desired type of display, select the submenu General Device Settings in the SETTINGS menu. At address 610 **FltDisp.LED/LCD** the two alternatives ***Target on PU*** and ***Target on TRIP*** (“No trip - no flag”) are offered.

After startup of the device featuring a 4-line display, default measured values are displayed. Use the arrow keys on the device front to select different measured value views to be used as the so-called default display. The start page of the default display, which will open after each startup of the device, can be selected via parameter 640 **`Start image DD`**. The available representation types for the measured value are listed in the Appendix.

2.1.2.3 Settings

Addresses which have an appended "A" can only be changed with DIGSI, under "Additional Settings".

Addr.	Parameter	Setting Options	Default Setting	Comments
610	FltDisp.LED/LCD	Target on PU Target on TRIP	Target on PU	Fault Display on LED / LCD
625A	T MIN LED HOLD	0 .. 60 min	0 min	Minimum hold time of latched LEDs
640	Start image DD	image 1 image 2 image 3 image 4 image 5 image 6	image 1	Start image Default Display

2.1.2.4 Information List

No.	Information	Type of Information	Comments
-	Test mode	IntSP	Test mode
-	DataStop	IntSP	Stop data transmission
-	UnlockDT	IntSP	Unlock data transmission via BI
-	Reset LED	IntSP	Reset LED
-	SynchClock	IntSP_Ev	Clock Synchronization
-	>Light on	SP	>Back Light on
-	HWTestMod	IntSP	Hardware Test Mode
-	Error FMS1	OUT	Error FMS FO 1
-	Error FMS2	OUT	Error FMS FO 2
-	Distur.CFC	OUT	Disturbance CFC
1	Not configured	SP	No Function configured
2	Non Existent	SP	Function Not Available
3	>Time Synch	SP	>Synchronize Internal Real Time Clock
5	>Reset LED	SP	>Reset LED
11	>Annunc. 1	SP	>User defined annunciation 1
12	>Annunc. 2	SP	>User defined annunciation 2
13	>Annunc. 3	SP	>User defined annunciation 3
14	>Annunc. 4	SP	>User defined annunciation 4
15	>Test mode	SP	>Test mode
16	>DataStop	SP	>Stop data transmission
51	Device OK	OUT	Device is Operational and Protecting
52	ProtActive	IntSP	At Least 1 Protection Funct. is Active
55	Reset Device	OUT	Reset Device
56	Initial Start	OUT	Initial Start of Device
67	Resume	OUT	Resume

No.	Information	Type of Information	Comments
68	Clock SyncError	OUT	Clock Synchronization Error
69	DayLightSavTime	OUT	Daylight Saving Time
70	Settings Calc.	OUT	Setting calculation is running
71	Settings Check	OUT	Settings Check
72	Level-2 change	OUT	Level-2 change
73	Local change	OUT	Local setting change
110	Event Lost	OUT_Ev	Event lost
113	Flag Lost	OUT	Flag Lost
125	Chatter ON	OUT	Chatter ON
126	ProtON/OFF	IntSP	Protection ON/OFF (via system port)
127	AR ON/OFF	IntSP	Auto Reclose ON/OFF (via system port)
140	Error Sum Alarm	OUT	Error with a summary alarm
144	Error 5V	OUT	Error 5V
160	Alarm Sum Event	OUT	Alarm Summary Event
177	Fail Battery	OUT	Failure: Battery empty
181	Error A/D-conv.	OUT	Error: A/D converter
183	Error Board 1	OUT	Error Board 1
184	Error Board 2	OUT	Error Board 2
185	Error Board 3	OUT	Error Board 3
186	Error Board 4	OUT	Error Board 4
187	Error Board 5	OUT	Error Board 5
188	Error Board 6	OUT	Error Board 6
189	Error Board 7	OUT	Error Board 7
190	Error Board 0	OUT	Error Board 0
191	Error Offset	OUT	Error: Offset
192	Error1A/5Awrong	OUT	Error:1A/5Ajumper different from setting
193	Alarm adjustm.	OUT	Alarm: Analog input adjustment invalid
194	Error neutralCT	OUT	Error: Neutral CT different from MLFB
320	Warn Mem. Data	OUT	Warn: Limit of Memory Data exceeded
321	Warn Mem. Para.	OUT	Warn: Limit of Memory Parameter exceeded
322	Warn Mem. Oper.	OUT	Warn: Limit of Memory Operation exceeded
323	Warn Mem. New	OUT	Warn: Limit of Memory New exceeded

2.1.3 Power System Data 1

The device requires some plant and power system data in order to be able to adapt its functions accordingly, depending on the actual application. The data required include for instance rated data of the substation and the measuring transformers, polarity and connection of the measured quantities, if necessary features of the circuit breakers, and others. Furthermore, there are several function parameters associated with several functions rather than one specific protection, control or monitoring function. The Power System Data 1 can only be changed from a PC running DIGSI and are discussed in this section.

2.1.3.1 Setting Notes

General

In DIGSI double-click on Settings to display the relevant selection. A dialog box with the tabs Transformers, Power System and Breaker will open under **`Power System Data 1`** in which you can configure the individual parameters. The following subsections are structured in the same way.

Current Transformer Polarity

In address 201 **`CT Starpoint`**, the polarity of the wye-connected current transformers is specified (the following figure also goes for only two current transformers). The setting determines the measuring direction of the device (forward = line direction). A change in this setting also results in a polarity reversal of the earth current inputs I_E.

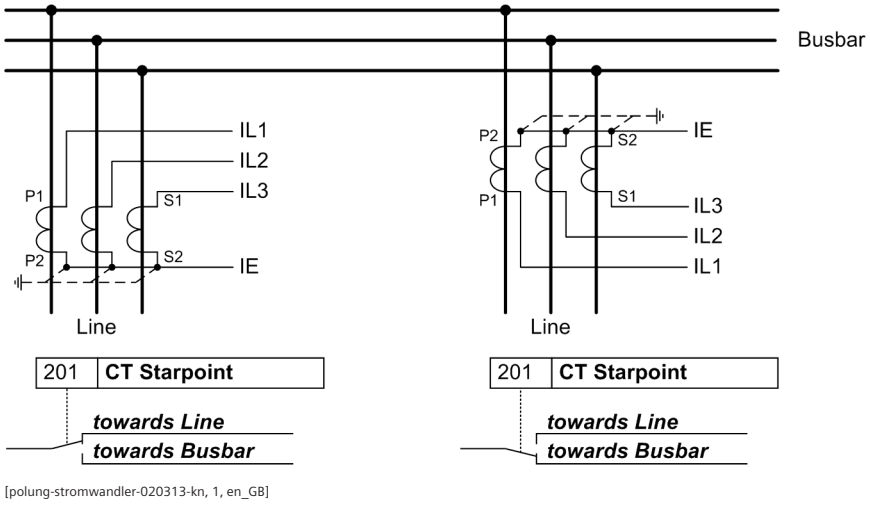

[polung-stromwandler-020313-kn, 1, en_GB]

Figure 2-3 Polarity of current transformers

Nominal Values of the Transformers

In the addresses 203 **`Unom PRIMARY`** and 204 **`Unom SECONDARY`** the device obtains information on the primary and secondary rated voltage (phase-to-phase voltage) of the voltage transformers; in addresses 205 **`CT PRIMARY`** and 206 **`CT SECONDARY`** the primary and secondary rated current transformers are set.

It is important to ensure that the secondary CT nominal current matches the rated current of the device, otherwise the device will be blocked. The nominal current is set with jumpers on the measuring module (see *3.1.2 Hardware Modifications*).

Correct entry of the primary data is a prerequisite for the correct computation of operational measured values with primary magnitude. If the settings of the device are performed with primary values using DIGSI, these primary data are an indispensable requirement for the correct function of the device.

Voltage Connection

The device features four voltage measuring inputs, three of which are connected to the set of voltage transformers. Various possibilities exist for the fourth voltage input U_4.

- Connection of the U_4 input to the open delta winding Ue–n of the voltage transformer set:

  Address 210 is then set to: **`U4 transformer`** = ***`Udelta transf.`***.

  When connected to the e-n winding of a set of voltage transformers, the voltage transformation ratio of the voltage transformers is usually:

  $$\frac{U_{Nprim}}{\sqrt{3}} / \frac{U_{Nsec}}{\sqrt{3}} / \frac{U_{Nsec}}{3}$$

  The factor Uph/Udelta (secondary voltage, address 211 **`Uph / Udelta`**) must be set to $3/\sqrt{3} = \sqrt{3} \approx$ **1.73**. For other transformation ratios, e.g. the formation of the displacement voltage via an interconnected transformer set, the factor must be corrected accordingly. This factor is important for monitoring the measured values and the scaling of the measured values and fault recording values.

- Connection of the U_4 input to perform the synchronism check:

  Address 210 is then set to: **`U4 transformer`** = ***`Usy2 transf.`***.

  If the voltage transformers for the protection functions U_{sy1} are located on the outgoing feeder side, the U_4 transformer has to be connected to a busbar voltage U_{sy2}. Synchronisation is also possible if the voltage transformers for the protection functions U_{sy1} are connected on busbar side, in which case the additional U_4 transformer must be connected to a feeder voltage.

  If the transformation ratio differs, this can be adapted with the setting in address 215 **`Usy1/Usy2 ratio`**. In address 212 **`Usy2 connection`**, the type of voltage connected to measuring point U_{sy2} for synchronism check is set. The device then automatically selects the voltage at measuring point U_{sy1}. If the two measuring points used for synchronism check — e.g. feeder voltage transformer and busbar voltage transformer — are not separated by devices that cause a relative phase shift, then the parameter in address 214 **`φ Usy2-Usy1`** is not required. This parameter can only be changed in DIGSI at Display **Additional Settings**. If, however, a power transformer is connected in between, its vector group must be adapted. The phase angle from $U_{sy1}1$ to U_{sy2} is evaluated with positive sense.

  Example: (see also *Figure 2-4*)

  Busbar 400 kV primary, 110 V secondary,

  Feeder 220 kV primary, 100 V secondary,

  Transformator 400 kV / 220 kV, vector group Dy(n) 5

  The transformer vector group is defined from the high voltage side to the low voltage side. In this example, the feeder transformers are those of the low voltage side of the transformer. Since the device "looks" from the direction of the feeder transformers, the angle is 5 · 30° (according to the vector group) negative, i.e. - 150°. A positive angle is obtained by adding 360°: Address 214: ϕ Usy2-Usy1 = 360° - 150° = 210°.

  Adresse 214: **`φ Usy2-Usy1`** = 360° - 150° = **210°**.

  The busbar transformers supply 110 V secondary for primary operation at nominal value while the feeder transformers supply 100 V secondary. Therefore, this difference must be balanced:

  Address 215: **`Usy1/Usy2 ratio`** = 100 V/110 V = **0,91**.

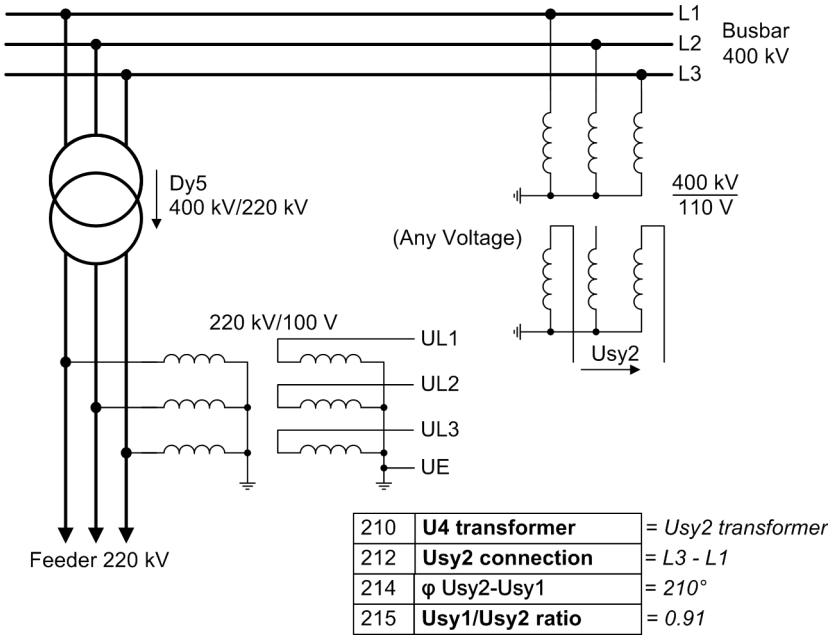

[sammelschienespg-trafo-wlk-200802, 1, en_GB]

Figure 2-4 Busbar voltage measured via transformer

- Connection of the U_4 input to any other voltage U_X, which can be processed by the overvoltage protection function:
  Address 210 is then set to: **U4 transformer** = ***Ux transformer***.
- If the input U_4 is not required, set:
  Address 210 **U4 transformer** = ***Not connected***.
  Factor **Uph / Udelta** (address 211, see above) is also of importance in this case, as it is used for scaling the measured data and fault recording data.

Current Connection

The device features four current measurement inputs, three of which are connected to the set of current transformers. Various possibilities exist for the fourth current input I_4:

- Connection of the I_4 input to the earth current in the starpoint of the set of current transformers on the protected feeder (normal connection):
  Address 220 is then set to: **I4 transformer** = ***In prot. line*** and address 221 **I4/Iph CT** = **1**.
- Connection of the I_4 input to a separate earth current transformer on the protected feeder (e.g. a summation CT or core balance CT):

  Address 220 is then set to: **I4 transformer** = ***In prot. line*** and address 221 **I4/Iph CT** is set:

$$I_4 / I_{ph\ CT} = \frac{\text{Ratio of earth current transformer}}{\text{Ratio of phase current transformers}}$$

[uebersetzung-erd-phase-260702-wlk, 1, en_GB]

Example:
Phase current transformers 500 A / 5 A
Earth current transformer 60 A / 1 A

$$I_4 / I_{ph\,CT} = \frac{60/1}{500/5} = 0.600$$

[formel-strmwdl-parallelschlt-270702-wlk, 1, en_GB]

- If the input I_4 is not required, set:

  Address 220 **I4 transformer** = ***Not connected***,

  Address 221 **I4/Iph CT** is then irrelevant.

  In this case, the neutral current is calculated from the sum of the phase currents.

Rated frequency

The rated frequency of the power system is set at address 230 **Rated Frequency**. The factory presetting according to the ordering code (MLFB) only needs to be changed if the device is applied in a region different from the one indicated when ordering. You can set ***50 Hz*** or ***60 Hz***

System Starpoint

The manner in which the system starpoint is earthed must be considered for the correct processing of earth faults and double earth faults. Accordingly, set for address 207 **SystemStarpoint** = ***Solid Earthed***, ***Peterson-Coil*** or ***Isolated***. For low-resistant earthed systems set ***Solid Earthed***.

Phase Sequence

Use address 235 **PHASE SEQ.** to change the default setting (***L1 L2 L3*** for clockwise rotation) if your power system has a permanent anti-clockwise phase sequence (***L1 L3 L2***).

Closing time of the circuit breaker

The circuit breaker closing time **T-CB close** at address 239 is required if the device is to close also under asynchronous system conditions, no matter whether for manual closing, for automatic reclosing after 3-pole tripping, or both. The device will then calculate the time for the close command such that the voltages are phase-synchronous the instant the breaker poles make contact.

Trip command duration

In address 240 the minimum trip command duration **TMin TRIP CMD** is set. It applies to all protection and control functions which may issue a trip command. It also determines the duration of the trip pulse when a circuit breaker test is initiated via the device. This parameter can only be altered in DIGSI at **Display Additional Settings**.

In address 241 the maximum close command duration **TMax CLOSE CMD** is set. It applies to all close commands issued by the device. It also determines the length of the close command pulse when a circuit breaker test cycle is issued via the device. It must be long enough to ensure that the circuit breaker has securely closed. There is no risk in setting this time too long, as the close command will in any event be terminated following a new trip command from a protection function. This parameter can only be altered in DIGSI at **Display Additional Settings**.

Circuit breaker test

7VK61 allows a circuit-breaker test during operation using a trip-and-close command entered on the front panel or from DIGSI. The duration of the trip command is set as explained above. Address 242 **T-CBtest-dead** determines the duration from the end of the trip command until the start of the close command for this test. It should not be less than 0.1 s.

2.1.3.2 Settings

Addresses which have an appended “A” can only be changed with DIGSI, under “Additional Settings”.

Addr.	Parameter	Setting Options	Default Setting	Comments
201	CT Starpoint	towards Line towards Busbar	towards Line	CT Starpoint
203	Unom PRIMARY	1.0 .. 1200.0 kV	400.0 kV	Rated Primary Voltage
204	Unom SECONDARY	80 .. 125 V	100 V	Rated Secondary Voltage (Ph-Ph)
205	CT PRIMARY	10 .. 5000 A	1000 A	CT Rated Primary Current
206	CT SECONDARY	1A 5A	1A	CT Rated Secondary Current
207	SystemStarpoint	Solid Earthed Peterson-Coil Isolated	Solid Earthed	System Starpoint is
210	U4 transformer	Not connected Udelta transf. Usy2 transf. Ux transformer	Not connected	U4 voltage transformer is
211	Uph / Udelta	0.10 .. 9.99	1.73	Matching ratio Phase-VT To Open-Delta-VT
212	Usy2 connection	L1-E L2-E L3-E L1-L2 L2-L3 L3-L1	L1-L2	VT connection for Usy2
214A	φ Usy2-Usy1	0 .. 360 °	0 °	Angle adjustment Usy2-Usy1
215	Usy1/Usy2 ratio	0.50 .. 2.00	1.00	Matching ratio Usy1 / Usy2
220	I4 transformer	Not connected In prot. line	In prot. line	I4 current transformer is
221	I4/Iph CT	0.010 .. 5.000	1.000	Matching ratio I4/Iph for CT's
230	Rated Frequency	50 Hz 60 Hz	50 Hz	Rated Frequency
235	PHASE SEQ.	L1 L2 L3 L1 L3 L2	L1 L2 L3	Phase Sequence
239	T-CB close	0.01 .. 0.60 sec	0.06 sec	Closing (operating) time of CB
240A	TMin TRIP CMD	0.02 .. 30.00 sec	0.10 sec	Minimum TRIP Command Duration
241A	TMax CLOSE CMD	0.01 .. 30.00 sec	0.10 sec	Maximum Close Command Duration
242	T-CBtest-dead	0.00 .. 30.00 sec	0.10 sec	Dead Time for CB test-autoreclosure

2.1.4 Change Group

2.1.4.1 Purpose of the Setting Groups

Up to four different setting groups can be created for establishing the device's function settings. During operation, the user can locally switch between setting groups using the operator panel, binary inputs (if so configured), the operator and service interface from a personal computer or via the system interface. For reasons of safety, it is not possible to change between setting groups during a power system fault.

A setting group includes the setting values for all functions that have been selected during configuration as ***Enabled*** or an other active option. In 7VK61devices, four independent setting groups (A to D) are available. Whereas setting values and options may vary, the selected scope of functions is the same for all groups.

Setting groups enable the user to save the corresponding settings for each application. When they are needed, settings may be loaded quickly. All setting groups are stored in the relay. Only one setting group may be active at a given time.

2.1.4.2 Setting Notes

General

If you do not want to change between several setting groups, then set only setting group A. Then, the rest of this section is not applicable.

If multiple setting groups are desired, the setting group change option must be set to **Grp Chge OPTION** = ***Enabled*** (address 103). Now the 4 setting groups A to D are available. They are configured individually as required in the following. To find out how to proceed, how to copy and to reset settings groups to the delivery state, and how to switch between setting groups during operation, please refer to the SIPROTEC 4 System Description.

Two binary inputs enable changing between the 4 setting groups from an external source.

2.1.4.3 Settings

Addr.	Parameter	Setting Options	Default Setting	Comments
302	CHANGE	Group A Group B Group C Group D Binary Input Protocol	Group A	Change to Another Setting Group

2.1.4.4 Information List

No.	Information	Type of Information	Comments
-	P-GrpA act	IntSP	Setting Group A is active
-	P-GrpB act	IntSP	Setting Group B is active
-	P-GrpC act	IntSP	Setting Group C is active
-	P-GrpD act	IntSP	Setting Group D is active
7	>Set Group Bit0	SP	>Setting Group Select Bit 0
8	>Set Group Bit1	SP	>Setting Group Select Bit 1

2.1.5 Power System Data 2

The general protection data (**P.System Data 2**) include settings associated with all functions rather than a specific protection, monitoring or control function. In contrast to the **P.System Data 1** as discussed before, these can be changed over with the setting groups and can be configured via the operator panel of the device.

2.1.5.1 Setting Notes

Rating of the Protected Object

The rated primary voltage (phase-to-phase) and rated primary current (phases) of the protected equipment are entered in the addresses 1103 **FullScaleVolt.** and 1104 **FullScaleCurr.**. These settings are required for indication of operational measured values in percent. If these rated values match the primary VT's and CT's, they correspond to the settings in address 203 and 205 (Section **Power System Data 1**).

General line data

The directional values (power, power factor, work and related min., max., mean and setpoint values), calculated in the operational measured values, are usually defined with positive direction towards the protected object. This requires that the connection polarity for the entire device was configured accordingly in the Power System Data 1 (compare also "Polarity of Current Transformers", address 201). But it is also possible to reverse the direction for the outputs without having to change the transformer connections e.g. so that the active power flow from the line to the busbar is indicated in the positive sense. Set under the address 1107 **P,Q sign** the option ***reversed***. If the setting is ***not reversed*** (default), the positive direction for energy flow from busbar to line are evaluated as being positive.

Circuit breaker status

Information regarding the circuit breaker position is required by various protection and supplementary functions to ensure their optimal functionality. The device has a circuit breaker status recognition which processes the status of the circuit breaker auxiliary contacts and contains also a detection based on the measured currents and voltages for opening and closing (see also Section *2.8.1 Function Control*).

In address 1130 the residual current **PoleOpenCurrent** is set, which will definitely not be exceeded when the circuit breaker pole is open. If parasitic currents (e.g. through induction) can be excluded when the circuit breaker is open, this setting may be very sensitive. Otherwise this setting must be increased. Usually the presetting is sufficient. This parameter can only be altered in DIGSI at Display **Additional Settings**.

The residual voltage **PoleOpenVoltage**, which will definitely not be exceeded when the circuit breaker pole is open, is set in address 1131. Voltage transformers must be on the line side. The setting should not be too sensitive because of possible parasitic voltages (e.g. due to capacitive coupling). It must in any event be set below the smallest phase-earth voltage which may be expected during normal operation. Usually the presetting is sufficient. This parameter can only be altered in DIGSI at Display **Additional Settings**.

Address 1135 **Reset Trip CMD** determines under which conditions a trip command is reset. If ***CurrentOpenPole*** is set, the trip command is reset as soon as the current disappears. It is important that the value set in address 1130 **PoleOpenCurrent** (see above) is undershot. If ***Current AND CB*** is set, the circuit breaker auxiliary contact must send a message that the circuit breaker is open. It is a prerequisite for this setting that the position of the auxiliary contacts is allocated via a binary input.

For special applications, in which the device trip command does not always lead to a complete cutoff of the current, the setting ***Pickup Reset*** can be chosen. In this case, the trip command is reset as soon as the pickup of the tripping protection function drops off and - just as with the other setting options- the minimum trip command duration (address 240) has elapsed. The setting ***Pickup Reset*** makes sense, for instance, during the test of the protection equipment, when the system-side load current cannot be cut off and the test current is injected in parallel to the load current.



NOTE

For CB Test and automatic reclosure the CB auxiliary contact status derived with the binary inputs >CB1 ... (No. 366 to 371, 410 and 411) is relevant to indicate the CB switching status. The other binary inputs >CB ... (No. 351 to 353, 379 and 380) are used for detecting the status of the line (address 1134) and for reset of the trip command (address 1135). Address 1135 is also used by other protection functions, e.g. by the echo function, energization in case of overcurrent etc. For use with one circuit breaker only, both binary input functions, e.g. 366 and 351, can be allocated to the same physical input. For applications with 2 circuit breakers per feeder (1.5 circuit breaker systems or ring bus), the binary inputs >CB1... must be connected to the correct circuit breaker. The binary inputs >CB... then need the correct signals for detecting the line status. In certain cases, an additional CFC logic may be necessary.

Address 1136 **OpenPoleDetect.** defines the criteria for operating the internal open-pole detector (see also Section *2.8.1 Function Control*, Subsection Open-Pole Detector). When using the default setting ***w/ measurement***, all available data are evaluated that indicate single-pole dead time. The internal trip command and pickup indications, the current and voltage measured values and the CB auxiliary contacts are used. To evaluate only the auxiliary contacts including the phase currents, set the address 1136 to ***Current AND CB***. If you do not wish to detect single-pole dead time, set **OpenPoleDetect.** to ***OFF***.

For manual closure of the circuit breaker via binary inputs, it can be specified in address 1151 **MAN. CLOSE** whether the integrated manual CLOSE detection checks the synchronism between the busbar voltage and the

voltage of the switched feeder. This setting does not apply for a close command via the integrated control functions. If the synchronism check is desired, the device must either feature the integrated synchronism check function or an external device for synchronism check must be connected.

If the internal synchronism check is to be used, the synchronism check function must be enabled; an additional voltage U_{sy2} for synchronism check has to be connected to the device and this must be correctly parameterised in the Power System Data 1 (address 210 **U4 transformer** = ***Usy2 transf.*** and the associated factors).

If no synchronism check is to be performed with manual closing, set **MAN. CLOSE** = ***w/o Sync-check***. If a check is desired, set ***with Sync-check***. To not use the MANUAL CLOSE function of the device, set **MAN. CLOSE** to ***NO***. This may be reasonable if the close command is output to the circuit breaker without involving the 7VK61, and the relay itself is not desired to issue a close command.

For commands via the integrated control (on site, DIGSI, serial interface) address 1152 **Man.Clos. Imp.** determines whether a close command via the integrated control regarding the MANUAL CLOSE handling for the protection functions (like instantaneous re-opening when switching onto a fault) is to act like a MANUAL CLOSE command via binary input. This address also informs the device to which switchgear this applies. You can select from the switching devices which are available to the integrated control. Select the circuit breaker which operates for manual closure and, if required, for automatic reclosure (usually Q0). If ***none*** is set here, a CLOSE command via the control will not generate a MANUAL CLOSE impulse for the protection function.

2.1.5.2 Settings

Addresses which have an appended "A" can only be changed with DIGSI, under "Additional Settings".

The table indicates region-specific presettings. Column C (configuration) indicates the corresponding secondary nominal current of the current transformer.

Addr.	Parameter	C	Setting Options	Default Setting	Comments
1103	FullScaleVolt.		1.0 .. 1200.0 kV	400.0 kV	Measurement: Full Scale Voltage (100%)
1104	FullScaleCurr.		10 .. 5000 A	1000 A	Measurement: Full Scale Current (100%)
1107	P,Q sign		not reversed reversed	not reversed	P,Q operational measured values sign
1130A	PoleOpenCurrent	1A	0.05 .. 1.00 A	0.10 A	Pole Open Current Threshold
		5A	0.25 .. 5.00 A	0.50 A	
1131A	PoleOpenVoltage		2 .. 70 V	30 V	Pole Open Voltage Threshold
1135	Reset Trip CMD		CurrentOpenPole Current AND CB Pickup Reset	CurrentOpenPole	RESET of Trip Command
1136	OpenPoleDetect.		OFF Current AND CB w/ measurement	w/ measurement	open pole detector
1150A	SI Time Man.Cl		0.01 .. 30.00 sec	0.30 sec	Seal-in Time after MANUAL closures
1151	MAN. CLOSE		with Sync-check w/o Sync-check NO	NO	Manual CLOSE COMMAND generation
1152	Man.Clos. Imp.		(Einstellmöglichkeiten anwendungsabhängig)	none	MANUAL Closure Impulse after CONTROL

2.1.5.3 Information List

No.	Information	Type of Information	Comments
301	Pow.Sys.Flt.	OUT	Power System fault
302	Fault Event	OUT	Fault Event
351	>CB Aux. L1	SP	>Circuit breaker aux. contact: Pole L1
352	>CB Aux. L2	SP	>Circuit breaker aux. contact: Pole L2
353	>CB Aux. L3	SP	>Circuit breaker aux. contact: Pole L3
356	>Manual Close	SP	>Manual close signal
357	>Blk Man. Close	SP	>Block manual close cmd. from external
361	>FAIL:Feeder VT	SP	>Failure: Feeder VT (MCB tripped)
362	>FAIL:U4 VT	SP	>Failure: Usy4 VT (MCB tripped)
366	>CB1 Pole L1	SP	>CB1 Pole L1 (for AR,CB-Test)
367	>CB1 Pole L2	SP	>CB1 Pole L2 (for AR,CB-Test)
368	>CB1 Pole L3	SP	>CB1 Pole L3 (for AR,CB-Test)
371	>CB1 Ready	SP	>CB1 READY (for AR,CB-Test)
378	>CB faulty	SP	>CB faulty
379	>CB 3p Closed	SP	>CB aux. contact 3pole Closed
380	>CB 3p Open	SP	>CB aux. contact 3pole Open
385	>Lockout SET	SP	>Lockout SET
386	>Lockout RESET	SP	>Lockout RESET
410	>CB1 3p Closed	SP	>CB1 aux. 3p Closed (for AR, CB-Test)
411	>CB1 3p Open	SP	>CB1 aux. 3p Open (for AR, CB-Test)
501	Relay PICKUP	OUT	Relay PICKUP
503	Relay PICKUP L1	OUT	Relay PICKUP Phase L1
504	Relay PICKUP L2	OUT	Relay PICKUP Phase L2
505	Relay PICKUP L3	OUT	Relay PICKUP Phase L3
506	Relay PICKUP E	OUT	Relay PICKUP Earth
507	Relay TRIP L1	OUT	Relay TRIP command Phase L1
508	Relay TRIP L2	OUT	Relay TRIP command Phase L2
509	Relay TRIP L3	OUT	Relay TRIP command Phase L3
510	Relay CLOSE	OUT	Relay GENERAL CLOSE command
511	Relay TRIP	OUT	Relay GENERAL TRIP command
512	Relay TRIP 1pL1	OUT	Relay TRIP command - Only Phase L1
513	Relay TRIP 1pL2	OUT	Relay TRIP command - Only Phase L2
514	Relay TRIP 1pL3	OUT	Relay TRIP command - Only Phase L3
515	Relay TRIP 3ph.	OUT	Relay TRIP command Phases L123
530	LOCKOUT	IntSP	LOCKOUT is active
533	IL1 =	VI	Primary fault current IL1
534	IL2 =	VI	Primary fault current IL2
535	IL3 =	VI	Primary fault current IL3
536	Definitive TRIP	OUT	Relay Definitive TRIP
545	PU Time	VI	Time from Pickup to drop out
546	TRIP Time	VI	Time from Pickup to TRIP
561	Man.Clos.Detect	OUT	Manual close signal detected
562	Man.Close Cmd	OUT	CB CLOSE command for manual closing
563	CB Alarm Supp	OUT	CB alarm suppressed

No.	Information	Type of Information	Comments
590	Line closure	OUT	Line closure detected
591	1pole open L1	OUT	Single pole open detected in L1
592	1pole open L2	OUT	Single pole open detected in L2
593	1pole open L3	OUT	Single pole open detected in L3

2.1.6 Oscillographic Fault Records

2.1.6.1 Functional Description

The 7VK61 is equipped with a fault recording function. The instantaneous values of the measured quantities i_{L1}, i_{L2}, i_{L3}, i_E or i_{EE}, i_p, i_y and u_{L1}, u_{L2}, u_{L3}, u_{en} or u_{sync} or u_x or $3 \cdot u_0$

i_{L1}, i_{L2}, i_{L3}, i_E and u_{L1}, u_{L2}, u_{L3}, u_4

(voltages depending on the connection) are sampled at intervals of 1 ms (for 50 Hz) and stored in a circulating buffer (20 samples per cycle). For a fault, the data are stored for an adjustable period of time, but no more than 5 seconds per fault. A total of 8 faults can be saved spanning a total time of 15 s maximum. The fault record memory is automatically updated with every new fault, so that no acknowledgment is required. The storage of fault values can be started by pickup of a protection function, as well as via binary input and via the serial interface.

The data can be retrieved via the serial interfaces by means of a personal computer and evaluated with the operating software DIGSI and the graphic analysis software SIGRA 4. The latter graphically represents the data recorded during the system fault and calculates additional information such as the impedance or r.m.s. values from the measured values. A selection may be made as to whether the currents and voltages are represented as primary or secondary values. Binary signal traces (marks) of particular events, e.g. “fault detection”, “tripping” are also represented.

If the device has a serial system interface, the fault recording data can be passed on to a central device via this interface. Data are evaluated by appropriate programs in the central device. Currents and voltages are referred to their maximum values, scaled to their rated values and prepared for graphic presentation. Binary signal traces (marks) of particular events e.g. “fault detection”, “tripping” are also represented.

In the event of transfer to a central device, the request for data transfer can be executed automatically and can be selected to take place after each fault detection by the protection, or only after a trip.

2.1.6.2 Setting Notes

General

Other settings pertaining to fault recording (waveform capture) are found in the submenu **Oscillographic Fault Records** submenu of the **Settings** menu. Waveform capture makes a distinction between the trigger instant for an oscillographic record and the criterion to save the record (address402 **WAVEFORMTRIGGER**). This parameter can only be altered in DIGSI at **Display Additional Settings**. Normally the trigger instant is the device pickup, i.e. the pickup of an arbitrary protection function is assigned the time. The criterion for saving may be both the device pickup(***Save w. Pickup***) or the device trip ***Save w. TRIP***). A trip command issued by the device can also be used as trigger instant (***Start w. TRIP***), in this case it is also the saving criterion.

An oscillographic fault record includes data recorded prior to the time of trigger, and data after the dropout of the recording criterion. Usually this is also the extent of a fault recording (address 403 **WAVEFORM DATA** = ***Fault event***). If automatic reclosure is implemented, the entire system disturbance — possibly with several reclose attempts — up to the ultimate fault clearance can be stored (address 403 **WAVEFORM DATA** = ***Pow.Sys.Flt.***). This facilitates the representation of the entire system fault history, but also consumes storage capacity during the auto reclosure dead time(s). This parameter can only be altered in DIGSI at **Display Additional Settings**.

The actual storage time encompasses the pre-fault time **PRE. TRIG. TIME** (address 411) ahead of the reference instant, the normal recording time and the post-fault time **POST REC. TIME** (address 412) after the

storage criterion has reset. The maximum recording duration to each fault **MAX. LENGTH** is set at address 410.

The fault recording can also be triggered via a binary input, via the keypad on the front of the device or with a PC via the operation or service interface. The storage is then dynamically triggered. The length of the fault recording is set in address 415 **BinIn CAPT.TIME** (maximum length however is **MAX. LENGTH**, address 410). Pre-fault and post-fault times will be included. If the binary input time is set for ∞ , then the length of the record equals the time that the binary input is activated (static), or the **MAX. LENGTH** setting in address 410, whichever is shorter.

2.1.6.3 Settings

Addresses which have an appended "A" can only be changed with DIGSI, under "Additional Settings".

Addr.	Parameter	Setting Options	Default Setting	Comments
402A	WAVEFORMTRIGGER	Save w. Pickup Save w. TRIP Start w. TRIP	Save w. Pickup	Waveform Capture
403A	WAVEFORM DATA	Fault event Pow.Sys.Flt.	Fault event	Scope of Waveform Data
410	MAX. LENGTH	0.30 .. 5.00 sec	2.00 sec	Max. length of a Waveform Capture Record
411	PRE. TRIG. TIME	0.05 .. 0.50 sec	0.25 sec	Captured Waveform Prior to Trigger
412	POST REC. TIME	0.05 .. 0.50 sec	0.10 sec	Captured Waveform after Event
415	BinIn CAPT.TIME	0.10 .. 5.00 sec	0.50 sec	Capture Time via Binary Input

2.1.6.4 Information List

No.	Information	Type of Information	Comments
-	FltRecSta	IntSP	Fault Recording Start
4	>Trig.Wave.Cap.	SP	>Trigger Waveform Capture
30053	Fault rec. run.	OUT	Fault recording is running

2.1.7 Ethernet EN100-Module

2.1.7.1 Functional Description

An Ethernet EN100-Modul allows to integrate the 7VK61 into 100 Mbit communication networks used by process control and automation systems in accordance with IEC 61850. This standard provides consistent inter-relay communication without gateways or protocol converters. This allows open and interoperable use of SIPROTEC 4 devices even in heterogeneous environments. In parallel to the process control integration of the device, this interface can also be used for communication with DIGSI and for inter-relay communication via GOOSE.

2.1.7.2 Setting Notes

Interface selection

No settings are required for operation of the Ethernet system interface module (IEC 61850 Ethernet EN100-Modul). If the device is equipped with such a module (see MLFB), the module is automatically configured to the interface available for it.

2.1.7.3 Information List

No.	Information	Type of Information	Comments
009.0100	Failure Modul	IntSP	Failure EN100 Modul
009.0101	Fail Ch1	IntSP	Failure EN100 Link Channel 1 (Ch1)
009.0102	Fail Ch2	IntSP	Failure EN100 Link Channel 2 (Ch2)

2.2 Automatic reclosure function (optional)

Experience shows that about 85% of the arc faults on overhead lines are extinguished automatically after being tripped by the protection. The line can therefore be re-energized. Reclosure is performed by an automatic reclose function (AR).

Automatic reclosure function is only permitted on overhead lines because the possibility of extinguishing a fault arc automatically only exists there. It must not be used in any other case. If the protected object consists of a mixture of overhead lines and other equipment (e.g. overhead line in block with a transformer or overhead line/cable), it must be ensured that reclosure can only be performed in the event of a fault on the overhead line.

If the circuit breaker poles can be operated individually, a 1-pole automatic reclosure is usually initiated in the case of 1-phase faults and a 3-pole automatic reclosure in the case of multi-phase faults in the network with earthed system star point. If the fault still exists after reclosure (arc not extinguished or metallic short-circuit), the protection issues a final trip. In some systems several reclosing attempts are performed.

7VK61 allows reclosure after 3-pole, 1-pole and 1-pole /3-pole tripping. It is possible to execute several reclosing attempts.

1-pole or 1-pole/3-pole auto-reclosure requires the fault protection function of the feeder to issue phase-segregated trip commands.

Signals between the feeder protection and 7VK61 are exchanged via the binary inputs and outputs of the relay.

7VK61 may also be controlled by several protective installations (e.g. main and backup protection). In this case 7VK61 is capable of tripping both protective installations in all 3 poles if only one device trips multi-pole or if both protective installations attempt to trip 1-pole in different phases.

Using two 7VK61 with two feeder protection installations is also possible (see margin heading “2 Protection Relays with 2 Automatic Reclosure Circuits”).

2.2.1 Functional Description

Reclosure is performed by an automatic reclosure circuit (ARC). An example of the normal time sequence of a double reclosure is shown in the figure below.

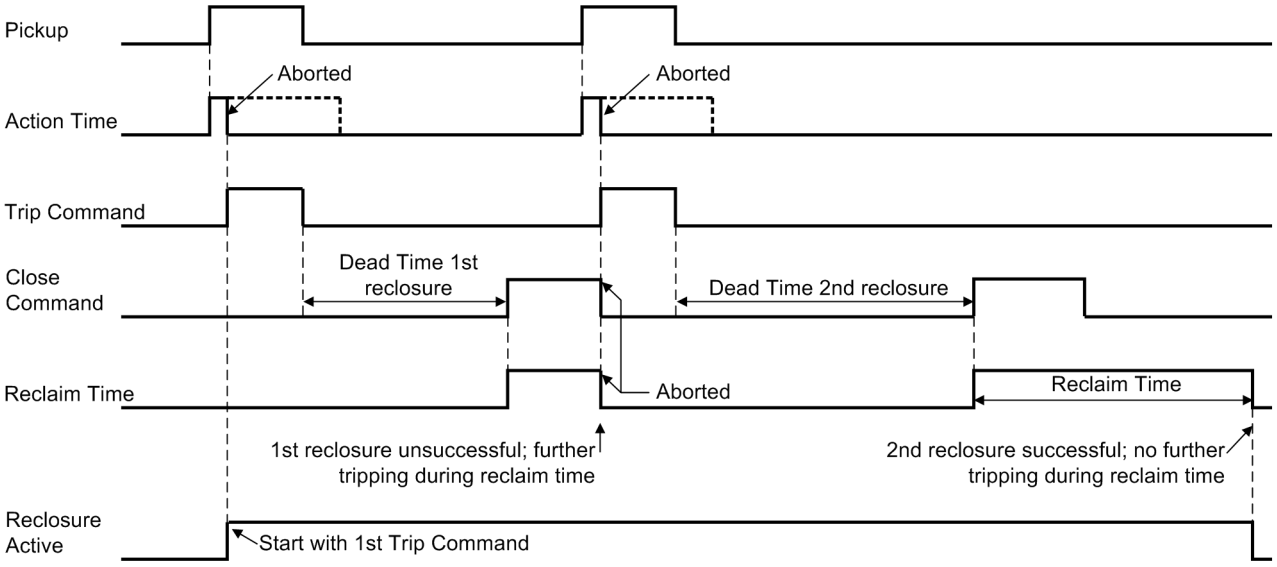

[ablaufdia-2-mal-we-wirkzeit-wlk-310702, 1, en_GB]

Figure 2-5 Timing diagram of a double-shot reclosure with action time (2nd reclosure successful)

The integrated automatic reclosing function allows up to 8 reclosing attempts. The first four reclose cycles may operate with different parameters (action and dead times, 1-/3-pole). The parameters of the fourth cycle apply to the fifth cycle and onwards.

Activation and deactivation

The automatic reclosure function can be switched on and off by means of the parameter 3401 **AUTO RECLOSE** via the system interface (if available) and via binary inputs (if allocated). The switch states are saved internally (refer to *Figure 2-6*) and secured against loss of auxiliary supply. Basically, it can only be switched on from where it had previously been switched off. To be active, the function must be switched on from all three switching sources.

Alteration of the switching state via setting or system interface is not possible during a running fault.

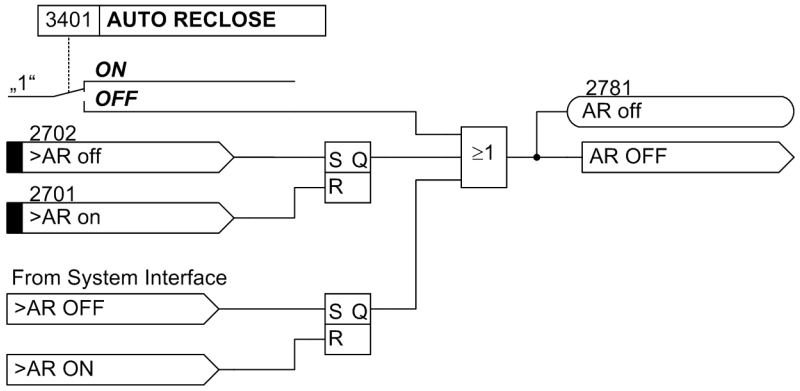

[logik-ein-aus-wiedereinschaltautomatik-st-290803, 1, en_GB]

Figure 2-6 Activation and deactivation of the auto-reclosure function

Selectivity before Reclosure

In order for automatic reclosing to be successful, all faults occurring on the entire line length must be cleared at both line ends simultaneously — as quickly as possible. Therefore, an instantaneous protection element is usually set to operate before the automatic reclose function initiates a reclosure. (*Figure 2-7*). A limited unselectivity in favor of fast simultaneous tripping is accepted here because reclosing will be performed in any case.

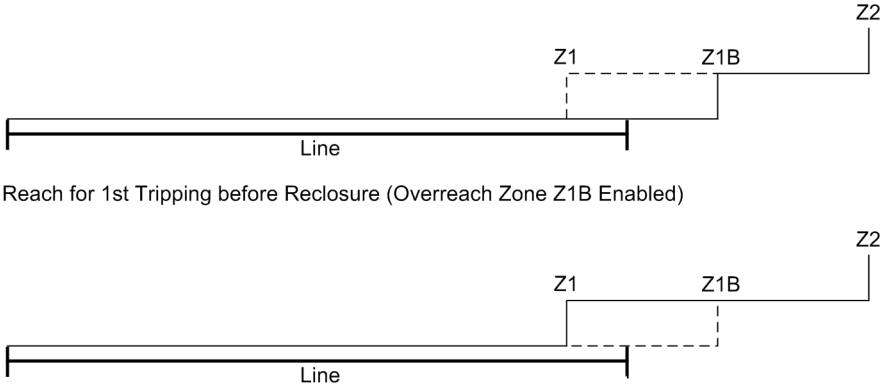

[reichweitenstrg-vor-we-dis-wlk-310702, 1, en_GB]

Figure 2-7 Reach control before first reclosure, using distance protection

If the fault protection features a so-called reclose stage, 7VK61 generates the signal *AR 1.CycZoneRel* for its release for as long as the reclose function is ready for reclosure after tripping.

If the feeder protection is capable of activating its reclose stage for 1-pole faults but not for multi-pole faults, the automatic reclose function can supply the signal *AR 1.CycZoneRel* in addition to the signal *AR Program1pole*. This signal indicates that the automatic reclose function initiates reclosure only after 1-pole tripping, but not after 3-pole tripping i.e., the reclose function is only programmed to 1-pole reclosure.

Initiation

Initiation of the automatic reclosure function means storing the first trip signal of a power system fault that was generated by a protection function which operates with the automatic reclosure function. In case of multiple reclosure, initiation therefore only takes place once, with the first trip command. This storing of the first trip signal is the prerequisite for all subsequent activities of the automatic reclosure function. The starting is important when the first trip command has not appeared before expiry of an action time (see below under "Action times").

Automatic reclosure function is not started if the circuit breaker has not been ready for at least one OPEN-CLOSE- OPEN–cycle at the instant of the first trip command. This can be achieved by setting parameters. For further information, please refer to "Interrogation of Circuit Breaker Ready State".

Each short-circuit protection function can be parameterized as to whether it should operate with the automatic reclose function or not, i.e. whether it should start the reclose function or not. The same goes for external trip commands applied via binary input and/or the trip commands generated by the teleprotection via permissive or intertrip signals.

Those protection and monitoring functions in the device which do not respond to short-circuits or similar conditions (e.g. an overload protection) do not initiate the automatic reclosure function because a reclosure will be of no use here. The circuit breaker failure protection must not start the automatic reclosure function either.

Action Times

It is often desirable to neutralise the ready–for–reclosure–state if the short-circuit condition was sustained for a certain time, e.g. because it is assumed that the arc has burned in to such an extent that there is no longer any chance of automatic arc extinction during the reclose dead time. Also for the sake of selectivity (see above), faults that are usually cleared after a time delay should not lead to reclosure.

The automatic reclosure function of the 7VK61 can be operated with or without action times (configuration parameter **AR control mode**, address 134). No starting signal is necessary from the protection functions or external protection devices that operate without action time. Initiation takes place as soon as the first trip command appears.

When operating with action time, an action time is available for each reclose cycle. The action times are always started by the general starting signal (with logic OR combination of all internal and external protection functions which can start the automatic reclose function). If no trip command is present before the action time expires, the corresponding reclosure cycle is not carried out.

For each reclosure cycle, it can be specified whether or not it should allow the initiation. Following the first general pickup, only those action times are relevant whose cycles allow starting because the other cycles are not allowed to initiate. By means of the action times and the permission to start the recloser (permission to be the first cycle that is executed), it is possible to determine which reclose cycles are executed depending on the time it takes the protection function to trip.

Example 1: 3 cycles are set. Starting of the automatic reclosure function is allowed for at least the first cycle. The action times are set as follows:

- 1st Reclosure: T Action = 0.2 s;
- 2nd Reclosure: T Action = 0.8 s;
- 3rd Reclosure: T Action = 1.2 s;

Since reclosure is ready before the fault occurs, the first trip of a time overcurrent protection following a fault is fast, i.e. before the end of any action time. This starts the automatic reclose function. After unsuccessful reclosure, the 2nd cycle would then become active; but the time overcurrent protection does not trip in this example until after 1s according to its grading time. Since the action time for the second cycle was exceeded here, the second cycle is blocked. The 3rd cycle with its parameters is therefore carried out now. If the trip command appeared more than 1.2 s after the 1st reclosure, there would be no further reclosure.

Example 2: 3 cycles are set. Starting is only allowed for the first. The action times are set as in example 1. The first protection trip takes place 0.5 s after starting. Since the action time for the 1st cycle has already expired at this time, this cannot start the automatic reclose function. As the 2nd and 3rd cycles are not permitted to start the reclose function they will also not be initiated. Therefore no reclosure takes place as no starting took place.

Example 3: 3 cycles are set. At least the first two cycles are set such that they can start the recloser. The action times are set as in example 1. The first protection trip takes place 0.5 s after starting. Since the action time for the 1st cycle has already expired at this time, it cannot start the automatic reclosure function, but the 2nd cycle, for which initiating is allowed, is activated immediately. This 2nd cycle therefore starts the automatic reclosure function, the 1st cycle is practically skipped.

Operating modes of the automatic reclosure function

The dead times — these are the times from elimination of the fault (drop off of the trip command or signaling via auxiliary contacts) to the initiation of the automatic close command — may vary depending on the automatic reclosure function operating mode selected when determining the function scope and the resulting signals of the starting protection functions.

In control mode ***TRIP...*** (With TRIP command ...), 1-pole or 1-/3-pole reclose cycles are possible if the device and the circuit breaker are suitable. In this case, different dead times (for every AR cycle) are possible after 1-pole tripping and after 3-pole tripping. The protection function that issues the trip command determines the type of trip: 1-pole or 3-pole. The dead time is controlled dependent on this.

In control mode ***PICKUP ... ...*** (With PICKUP...), different dead times can be set for every reclose cycle after 1-, 2- and 3-phase faults. The pickup diagram of the protection functions at the instant when the trip command disappears is the decisive factor. This mode allows the dead time to be made dependent on the type of fault in the case of 3-pole tripping applications.

Blocking reclosure

Different conditions lead to blocking of the automatic reclosure function. No reclosure is possible, for example, if it is blocked via a binary input. If the automatic reclosure function has not yet been started, it cannot be started at all. If a reclosure cycle is already in progress, dynamic blocking takes place (see below).

Each individual cycle may also be blocked via binary input. In this case the cycle concerned is declared as invalid and will be skipped in the sequence of permissible cycles. If blocking takes place while the cycle concerned is already running, this leads to aborting of the reclosure, i.e. no reclosure takes place even if other valid cycles have been parameterized.

Internal blocking signals, with a limited duration, arise during the course of the reclose cycles:

The reclaim time **T-RECLAIM** (address 3403) is started with each automatic reclosure command, the only exception is the ADT mode where the reclaim time can be disabled by setting it to 0 s. If the reclosure is successful, all functions of the automatic reclosure function return to the idle state at the end of the reclaim time; a fault after expiry of the reclaim time is treated as a new fault in the power system. If the reclaim time is disabled in ADT mode, each new trip after reclosing is considered as a new fault. If one of the protection functions causes another trip during the reclaim time, the next reclosure cycle will be started if multiple reclosure has been set. If no further reclosure attempts are permitted, the last reclosure is regarded as unsuccessful in case of another trip during the reclaim time. The automatic reclosure function is blocked dynamically.

The dynamic lock-out locks the reclosure for the duration of the dynamic lock-out time (0.5 s). This occurs, for example, after a final trip or other events which block the auto reclose function after it has been started. Restarting is blocked during this time. When this time expires, the automatic reclosure function returns to its quiescent state and is ready for a new fault in the network.

If the circuit breaker is closed manually (by the control discrepancy switch connected to a binary input, the local control functions or via one of the serial interfaces), the automatic reclosure function is blocked for a manual-close-blocking time **T-BLOCK MC**, address 3404. If a trip command occurs during this time, it can be assumed that a metallic short-circuit is present (e.g. closed earth switch). Every trip command within this time is therefore final. With the user definable logic functions (CFC) further control functions can be processed in the same way as a manual–close command.

Interrogation of the Circuit Breaker Ready State

A precondition for automatic reclosure function following clearance of a short-circuit is that the circuit breaker is ready for at least one OPEN-CLOSE-OPEN-cycle when the automatic reclosure circuit is started (i.e. at the time of the first trip command). The readiness of the circuit breaker is signaled to the device via the binary input *>CB1 Ready* (No. 371). If no such signal is available, the circuit breaker interrogation can be suppressed (presetting of address 3402) as automatic reclosure function would otherwise not be possible at all.

In the event of a single cycle reclosure this interrogation is usually sufficient. Since, for example, the air pressure or the spring tension for the circuit breaker mechanism drops after the trip, no further interrogation should take place.

For multiple reclosing attempts it is highly recommended to monitor the circuit breaker condition not only prior to the first, but also before each following reclosing attempt. Reclosure will be blocked until the binary input indicates that the circuit breaker is ready to complete another CLOSE-TRIP cycle.

The time needed by the circuit breaker to regain the ready state can be monitored by the 7VK61. This monitoring time **CB TIME OUT** (address 3409) starts as soon as the CB indicates the not ready state. The dead time may be extended if the ready state is not indicated when it expires. However, if the circuit breaker does not indicate its ready status for a longer period than the monitoring time, reclosure is dynamically blocked (see also above under margin heading "Reclosure Blocking").

Processing the circuit breaker auxiliary contacts

If the circuit breaker auxiliary contacts are connected to the device, the reaction of the circuit breaker is also checked for plausibility.

In the case of 1-pole tripping this applies to each individual circuit breaker pole. This assumes that the auxiliary contacts are connected to the appropriate binary inputs for each pole (*>CB1 Pole L1*, No. 366; *>CB1 Pole L2*, No. 367; *>CB1 Pole L3*, No. 368).

If, instead of the individual pole auxiliary contacts, the series connections of the normally open and normally closed contacts are used, the CB is assumed to have all three poles open when the series connection of the normally closed contacts is closed (binary input *>CB1 3p Open*, No 411). All three poles are assumed closed when the series connection of the normally open contacts is closed (binary input *>CB1 3p Closed*, No. 410). If none of these input indications is active, it is assumed that the circuit breaker is open at one pole (even if this condition also exists theoretically when two poles are open).

The device continuously checks the position of the circuit breaker: As long as the auxiliary contacts indicate that the CB is not closed (3-pole), the automatic reclosure function cannot be started. This ensures that a close command can only be issued if the CB has previously tripped (out of the closed state).

The valid dead time begins when the trip command disappears or, in addition, when signals taken from the CB auxiliary contacts indicate that the CB (pole) has opened.

If, after a **1-**pole trip command, the CB has opened **3-**pole, this is considered as a 3-pole tripping. If 3-pole reclose cycles are allowed, the dead time for 3-pole tripping becomes active in the operating mode with **trip command** (see margin heading "Operating modes of the automatic reclosure", above). If 3-pole cycles are not allowed, the reclosure is blocked dynamically. The trip command is final.

The latter also applies if the CB trips two poles following a 1-pole trip command. The device can only detect this if the auxiliary contacts of each pole are connected individually. The device immediately initiates 3-pole coupling which results in a 3-pole trip command.

If the CB auxiliary contacts indicate that at least one further pole has opened during the dead time after 1-pole tripping, a 3-pole reclose cycle is initiated with the dead time for 3-pole reclosure provided that this is permitted. If the auxiliary contacts are connected for each pole individually, the device can detect a two-pole open CB. In this case the device immediately sends a 3-pole trip command provided that the forced 3-pole trip is activated (see Section *2.2.2 Setting Notes* at margin heading "Forced 3-pole trip").

Sequence of a 3-pole reclose cycle

If the automatic reclosure function is ready, the fault protection trips 3-pole for all faults inside the stage selected for reclosure. The automatic reclosure function is started. When the trip command resets or the circuit breaker opens (auxiliary contact criterion) an adjustable dead time starts. At the end of this dead time, the circuit breaker receives a close command. At the same time, the (adjustable) dead time is started. If, when configuring the protection functions, at address 134 **AR control mode** = ***with Pickup*** was set, different dead times can be parameterised depending on the type of fault recognised by the protection.

If the fault is cleared (successful reclosure), the reclaim time expires and all functions return to their quiescent state. The fault is cleared.

If the fault has not been eliminated (unsuccessful reclosure), the short-circuit protection initiates a final trip following a protection stage active without reclosure. Any fault during the reclaim time leads to a final trip.

After unsuccessful reclosure (final tripping) the automatic reclosure function is blocked dynamically (see also margin heading "Reclose Block", above).

The sequence above applies for single reclosure cycles. In 7VK61 multiple reclosure (up to 8 shots) is also possible (see below).

Sequence of a 1-pole reclose cycle

1-pole reclose cycles are only possible if the external protection device and the Breaker Management Device 7VK61 relay are suitable for 1-pole tripping and if 1-pole tripping was enabled during configuration of the protection functions (address 110 **Trip mode** = ***1-/3pole***, see also Section *2.1.1.2 Setting Notes*). Of course, the circuit-breaker must also be suitable for 1-pole tripping.

If the automatic reclosure function is ready, the short-circuit protection trips 1-pole for all 1-phase faults inside the stage selected for reclosure. 1-pole tripping is of course only possible by fault protection functions which can determine the faulted phase.

If multiple-phase faults occur, the fault protection issues a final 3-pole trip with the stage that is valid without reclosure. Any 3-pole trip is final. The automatic reclosure function is blocked dynamically (see also margin heading “Blocking reclosure”, above).

The automatic reclosure function is started in the case of 1-pole tripping. The (adjustable) dead time for the 1-pole reclose cycle starts with reset of the trip command or opening of the circuit breaker pole (auxiliary contact criterion). After expiry of the dead time, the circuit breaker receives a close command. At the same time, the (adjustable) reclaim time is started. If the reclosure is blocked during the dead time following a 1-pole trip, immediate 3-pole tripping can take place as an option (forced 3-pole trip).

If the fault is cleared (successful reclosure), the reclaim time expires and all functions return to their quiescent state. The fault is cleared.

If the fault has not been eliminated (unsuccessful reclosure), the short-circuit protection initiates a final 3-pole trip with the protection stage that is valid without reclosure. All faults during the reclaim time also lead to a final 3-pole trip.

After unsuccessful reclosure (final tripping), the automatic reclosure function is blocked dynamically (see also margin heading “Reclose Block”, above).

The sequence above applies for single reclosure cycles. In 7VK61 multiple reclosure (up to 8 shots) is also possible (see below).

Sequence of a 1-pole and 3-pole Reclose Cycle

This operating mode is only possible if the responsible protection device and the Breaker Management Device 7VK61 are suitable for 1-pole tripping and if 1-pole tripping was enabled during configuration (address 110, see also Section *2.1.1.2 Setting Notes*). Of course, the circuit-breaker must also be suitable for 1-pole tripping.

If the automatic reclosure function is ready, the fault protection trips single-pole for 1-phase faults and 3-pole for multi-phase faults. 1-pole tripping is of course only possible with fault protection functions that can determine the faulted phase. The valid protective element selected for reclosure ready state applies for all fault types.

The automatic reclosure function is started at the moment of tripping. Depending on the type of fault, the (adjustable) dead time for the 1-pole reclose cycle or the (separately adjustable) dead time for the 3-pole reclose cycle starts following the reset of the trip command or opening of the circuit breaker (pole) (auxiliary contact criterion). After expiry of the dead time, the circuit breaker receives a close command. At the same time, the (adjustable) reclaim time is started. If the reclosure is blocked during the dead time following a 1-pole trip, immediate 3-pole tripping can take place as an option (forced 3-pole trip).

If the fault is cleared (successful reclosure), the reclaim time expires and all functions return to their quiescent state. The fault is cleared.

If the fault has not been eliminated (unsuccessful reclosure), the short-circuit protection initiates a final 3-pole trip with the protection stage that is valid without reclosure. All faults during the reclaim time also lead to a final 3-pole trip.

After unsuccessful reclosure (final tripping), the automatic reclosure function is blocked dynamically (see also margin heading “Reclose Block”, above).

The sequence above applies for single reclosure cycles. In 7VK61 multiple reclosure (up to 8 shots) is also possible (see below).

Multiple reclosure

If a short-circuit still exists after a reclosure attempt, further reclosure attempts can be made. Up to 8 reclosure attempts are possible with the automatic reclosure function integrated in the 7VK61.

The first four reclosure cycles are independent of each other. Each one has separate action and dead times, can operate with 1- or 3-pole trip and can be blocked separately via binary inputs. The parameters and intervention possibilities of the fourth cycle also apply to the fifth cycle and onwards.

The sequence is the same in principle as in the different reclosure programs described above. However, if the first reclosure attempt was unsuccessful, the reclosure function is not blocked, but instead the next reclose cycle is started. The appropriate dead time starts with the reset of the trip command or opening of the circuit breaker (pole) (auxiliary contact criterion). The circuit breaker receives a new close command after expiry of the dead time. At the same time the reclaim time is started.

The reclaim time is reset with each new trip command after reclosure and is started again with the next close command until the set maximum number of permissible auto-reclose cycles has been reached.

If one of the reclosing attempts is successful, i.e. the fault disappeared after reclosure, the blocking time expires and the automatic reclosing system is reset. The fault is cleared.

If none of the cycles is successful, the short-circuit protection initiates a final 3-pole trip after the last permissible reclosure, following a protection stage that is valid without auto-reclosure. The automatic reclosing function is blocked dynamically (see also above under margin heading “Blocking the Reclosing Function”).

Handling Evolving Faults

When 1-pole or 1-and 3-pole reclose cycles are executed in the network, particular attention must be paid to sequential faults.

Evolving faults are faults which occur during the dead time after clearance of the first fault.

There are various ways of handling sequential faults in the 7VK61depending on the requirements of the network:

To **detect** an evolving fault, you can select either the trip command of a protection function during the dead time or every further pickup as the criterion for an evolving fault.

There are also various selectable possibilities for the **response** of the internal auto- reclose function to a detected evolving fault.

- **`EV. FLT. MODE`** ***`blocks AR`***:

  The reclosure is blocked as soon as a sequential fault is detected. The tripping by the sequential fault is always 3-pole. This applies irrespective of whether 3-pole cycles have been permitted or not. There are no further reclosure attempts; the automatic reclosure function is blocked dynamically (see also margin heading “Blocking reclosure”, above).

- **`EV. FLT. MODE`** ***`starts 3p AR`***:

  As soon as a sequential fault is detected, the recloser switches to a 3-pole cycle. Each trip command is 3-pole. The separately settable dead time for sequential faults starts with the clearance of the sequential fault; after the dead time the circuit breaker receives a close command. The further sequence is the same as for 1- and 3-pole cycles.

  The complete dead time in this case consists of the part of the dead time for the 1-pole reclosure up to the clearance of the sequential fault plus the dead time for the sequential fault. This makes sense because the duration of the 3-pole dead time is most important for the stability of the network.

If reclosure is blocked due to a sequential fault without the protection issuing a 3-pole trip command (e.g. for sequential fault detection with starting), the device can send a 3-pole trip command so that the circuit breaker does not remain open with one pole (forced 3-pole trip).

Dead Line Check (DLC)

If the voltage of a disconnected phase does not disappear following a trip, reclosure can be prevented. A prerequisite for this function is that the voltage transformers are connected on the line side of the circuit breaker. To select this function the dead line check must be activated. The automatic reclosure function then checks the disconnected line for no-voltage: the line must have been without voltage for at least an adequate measuring time during the dead time. If this was not the case, the reclosure is blocked dynamically.

This no-voltage check on the line is of advantage if a small generator (e.g. wind generator) is connected along the line.

Reduced Dead Time (RDT)

If automatic reclosure function is performed in connection with time-graded protection, non-selective tripping before reclosure is often unavoidable in order to achieve fast, simultaneous tripping at all line ends. 7VK61 has a "reduced dead time (RDT" procedure which reduces the effect of the short-circuit on healthy line sections to a minimum. All phase-to-phase and phase-to-earth voltages are measured for the reduced dead time procedure. These voltages must rise above the threshold **U-live>** (address 3440) for the voltage measuring time **T U-stable** (address 3438). The value set for **U-live>** is appropriately converted for the phase-to-phase voltages. The voltage transformers must be located on the line side of the circuit breaker.

In the event of a short-circuit close to one of the line ends, the surrounding lines can initially be tripped because, for example, a distance protection detects the fault in its overreaching zone Z1B (*Figure 2-8*, mounting location III). If the network is meshed and there is at least one other infeed on busbar B, the voltage there returns immediately after clearance of the fault. For 1-pole tripping it is sufficient if there is an earthed transformer with delta winding connected at busbar B which ensures symmetry of the voltages and thus induces a return voltage in the open phase. This allows a distinction between the faulty line and the unfaulted line to be made as follows:

Since line B - C is only tripped singled-ended at C, it receives a return voltage from the end B which is not tripped so that at C the open phase(s) also has(have) voltage. If the device detects this at position III, reclosure can take place immediately or in a shorter time (to ensure sufficient voltage measuring time). The healthy line B - C is then back in operation.

Line A–B is tripped at both ends. No voltage is therefore present identifying the line as the faulted one at both ends. The normal dead time comes into service here.

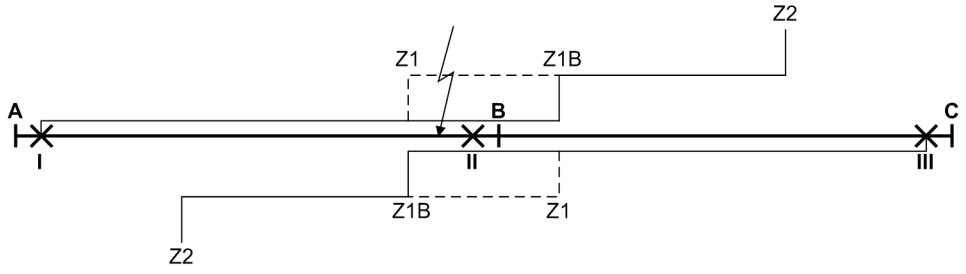

[beispiel-verkuerzte-we-wlk-310702, 1, en_GB]

Figure 2-8 Example of a reduced dead time (RDT)

A, B, C	Busbars
I, II, III	Relay locations
X	Tripped circuit breakers

Adaptive Dead Time (ADT)

In all the previous alternatives it was assumed that defined and equal dead times were set at both line ends, if necessary for different fault types and/or reclose cycles.

It is also possible to set the dead times (if necessary different for various fault types and/or reclose cycles) at one line end only and to configure the adaptive dead time at the other end (or ends). This requires the voltage transformers to be connected to the device and to be located on the line side of the circuit breaker. This functionality is only available if the device is connected across 3 voltage transformers.

Figure 2-9 shows an example with voltage measurement. It is assumed that device I operates with defined dead times whereas the adaptive dead time is configured at position II. It is important that the line is at least fed from busbar A, i.e. the side with the defined dead times.

When using the adaptive dead time, the automatic reclosing function at line end II decides autonomously whether to allow reclosing or not. Its decision is based on the line voltage at end II, which was reapplied from end I following reclosure. Device II will thus initiate reclosing as soon as it is evident that the line has been reenergized from end I. All phase-to-phase and phase-to-earth voltages are monitored.

In the illustrated example, the lines are disconnected at positions I, II and III. In I reclosure takes place after the configured dead time. At position III a reduced dead time can be used (see above) if there is also an infeed on busbar B.

If the fault has been cleared (successful reclosure), line A - B is re-connected to the voltage at busbar A through position I. Device II detects this voltage and also recloses after a short delay (to ensure a sufficient voltage measuring time). The fault is cleared.

If the fault has not been cleared after reclosure at I (unsuccessful reclosure), the line will be disconnected again in position I with the result that no healthy voltage is detected at location II so that the circuit breaker there does not reclose.

In the case of multiple reclosure the sequence may be repeated several times following an unsuccessful reclosure until one of the reclosure attempts is successful or a final trip takes place.

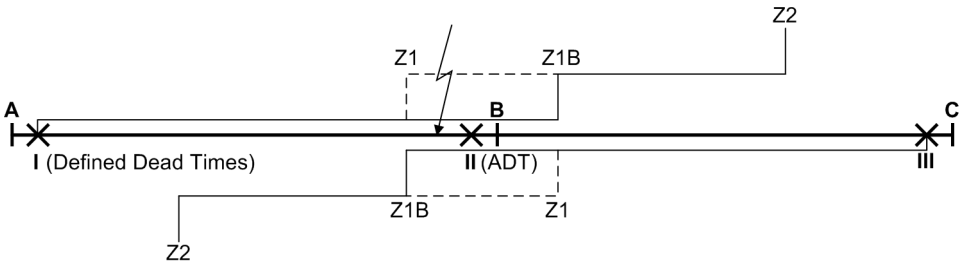

[beispiel-asp-wlk-310702, 1, en_GB]

Figure 2-9 Example of adaptive dead time (ADT)

A, B, C	Busbars
I, II, III	Relay locations
X	Tripped circuit breakers

As is shown by the example, the adaptive dead time has the following advantages:

- The circuit breaker at position II is not reclosed if the fault persists and is not unnecessarily stressed as a result.
- With non-selective tripping by overreach at position III no further trip and reclose cycles occur here because the short-circuit path via busbar B and position II remains interrupted even in the event of several reclosure attempts.
- At position I overreach is allowed in the case of multiple reclosures and even in the event of final tripping because the line remains open at position II and therefore no actual overreach can occur at I.

The adaptive dead time also includes the reduced dead time because the criteria are the same. There is no need to set the reduced dead time as well.

CLOSE Command Transmission (Remote-CLOSE)

With close command transmission the dead times are also only set at one line end. The other (or the others in lines with more than two ends) are set to "Adaptive Dead Time (ADT)". The latter just responds to the received close commands from the transmitting end.

At the sending line end, the transmission of the close command is delayed until it is sure that the local reclosure was successful. This means that the device waits whether a local pickup still occurs after reclosing. This delay prevents unnecessary closing at the remote end on the one hand but also increases the time until reclosure takes place there. This is not critical for a 1-pole interruption or in radial or meshed networks if no stability problems are expected under these conditions.

The close command can be transmitted using any suitable teleprotection scheme.

Control of the internal automatic reclosure by an external protection device

It must be decided whether the internal auto-reclosure is to be controlled by the starting (pickup) or by the trip command of the external protection (see also above under “Control Mode of the Automatic Reclosure”).

If the automatic reclosure function is controlled by the **trip command**, the following inputs and outputs are recommended:

The automatic reclosure function is started via the Binary inputs:

2711 *>AR Start*	General fault detection for the automatic reclosure circuit (only required for action time),
2712 *>Trip L1 AR*	Trip command L1 for the automatic reclosure circuit,
2713 *>Trip L2 AR*	Trip command L2 for the automatic reclosure circuit,
2714 *>Trip L3 AR*	Trip commandL3 for the automatic reclosure circuit.

The general pickup is decisive for starting the action times. It is also required if the automatic reclosing function has to detect sequential faults via pickup. In other cases, this input information is irrelevant.

The trip commands decide whether the dead time is activated for 1-pole or 3-pole reclose cycles or whether the reclosure is blocked in the event of a 3-pole trip (depending on the configured dead times).

Figure 2-10 shows the interconnection between the internal automatic reclosure function of the 7VK61 and an external protection device, as a connection example for 1-pole cylces.

To achieve 3-pole coupling of the external protection and to release, if necessary, its accelerated stages before reclosure, the following output functions are suitable:

2864 *AR 1p Trip Perm*	Internal automatic reclosure function ready for 1-pole reclose cycle, i.e. allows 1-pole tripping (logic inversion of the 3-pole coupling).
2889 *AR 1.CycZoneRel*	Internal automatic reclosure function ready for the first reclose cycle, i.e. releases the stage of the external protection device for reclosure, the corresponding outputs can be used for other cycles. This output can be omitted if the external protection does not require an overreaching stage (e.g. differential protection or comparison mode with distance protection).
2820 *AR Program1pole*	Internal automatic reclosure function is programmed for one pole, i.e. only recloses after 1-pole tripping. This output can be omitted if no overreaching stage is required (e.g. differential protection or comparison mode with distance protection).

Instead of the 3-phase-segregated trip commands, the 1-pole and 3-pole tripping may also be signalled to the internal automatic reclosure function - provided that the external protection device is capable of this -, i.e. assign the following binary inputs of the 7VK61:

2711 *>AR Start*	General fault detection for the internal automatic reclosure function (only required for action time),
2715 *>Trip 1pole AR*	Trip command 1-pole for the internal automatic reclosure function,
2716 *>Trip 3pole AR*	Trip command 3-pole for the internal automatic reclosure function.

If only 3-pole reclosure cycles are to be executed, it is sufficient to assign the binary input *>Trip 3pole AR* (No. 2716) for the trip signal. *Figure 2-11* shows an example. Any overreaching stages of the external protection are enabled again by *AR 1.CycZoneRel* (No. 2889) and of further cycles, if applicable.

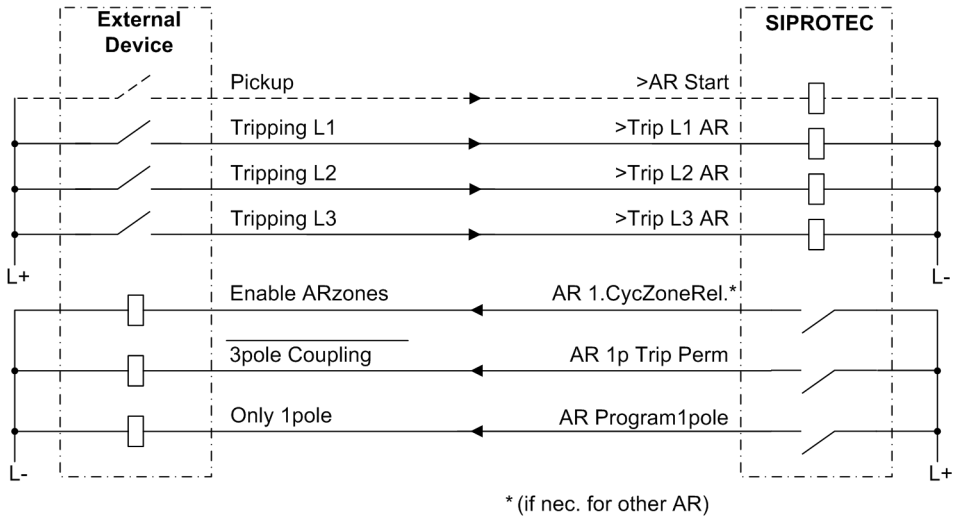

[anschlussbsp-ext-schutzger-1-o-3-pol-we-wlk-310702, 1, en_GB]

Figure 2-10 Connection example with external protection device for 1-/3-pole reclosure; AR control mode = with TRIP

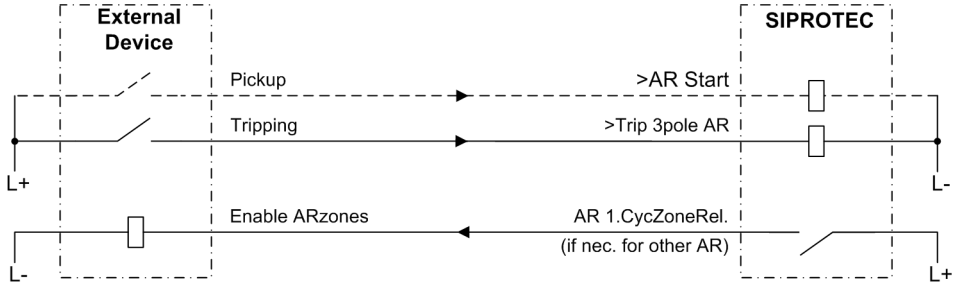

[anschlussbsp-ext-schutzger-3-pol-we-wlk-310702, 1, en_GB]

Figure 2-11 Connection example with external protection device for 3-pole reclosure; AR control mode = with TRIP

But if the internal automatic reclose function is controlled by the **pickup** (only possible for 3-pole tripping: 110 **Trip mode** = ***3pole only***), the phase-selective pickup signals of the external protection must be connected if distinction shall be made between different types of fault. The general trip command then suffices for tripping (No. 2746). *Figure 2-12* shows a connection example.

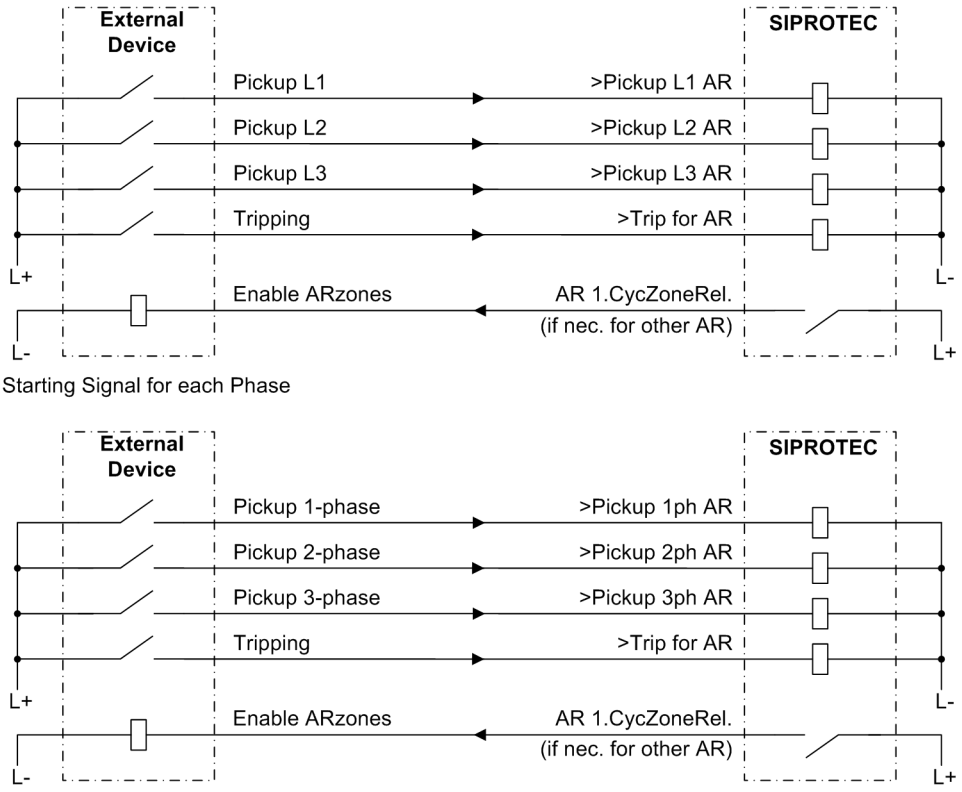

[anschlussbsp-ext-schutzger-fehlerab-pause-wlk-310702, 1, en_GB]

Figure 2-12 Connection example with external protection device for fault detection dependent dead time — dead time control by pickup signals of the protection device; AR control mode = with PICKUP

2 Protection Relays with 2 Automatic Reclosure Circuits

If redundant protection is provided for a line and each protection operates with its own automatic reclosure function, a certain signal exchange between the two combinations is necessary. The connection example in *Figure 2-13* shows the necessary cross-connections.

If the auxiliary contacts of the circuit breaker are connected to the correct phases, a 3-pole coupling by the 7VK61 is ensured when more than one CB pole is tripped. This requires the activation of the forced 3-pole trip (see Section *2.2.2 Setting Notes* at margin heading “Forced 3-pole trip”). An external automatic 3-pole coupling is therefore unnecessary if the above conditions are met. This prevents 2-pole tripping under all circumstances.

For the connection according to *Figure 2-13* it must be considered that the cross connections to the second protection must be interrupted during the check of one of the two protection systems with protection monitoring equipment. This is done, for example, by means of a test switch installed in between.

Alternatively, the variant with a minimum cross connection according to *Figure 2-14* can be applied. In this case, the following information should be considered:

- The switching state of the circuit breaker must be connected in a phase-selective way via the auxiliary contacts to the corresponding binary inputs of both protection systems in case of a 1-pole reclosure. If only 3- pole tripping is possible, the 3-pole status is sufficient.
- In order to prevent that a very quick response (1-pole) of a protection leads to an undesired 3-pole coupling of a second protection, a “software filter time” for the binary inputs of the auxiliary contacts is to be set (refer to *Figure 2-15*).

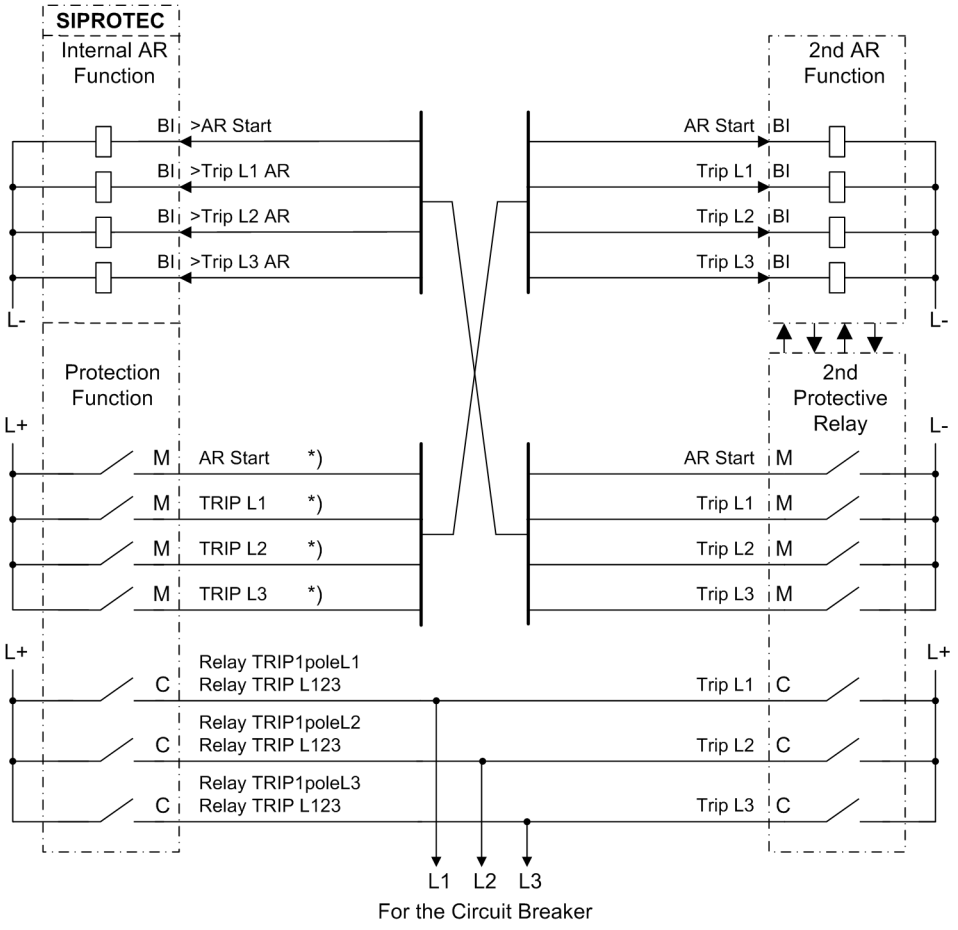

[anschlussbsp-2-schutzeinri-2-wes-wlk-310702, 1, en_GB]

Figure 2-13 Connection example for 2 protection devices with 2 automatic reclosure functions

BI	Binary inputs
M	Signal output
K	Command
*)	for all protection functions operating with AR.

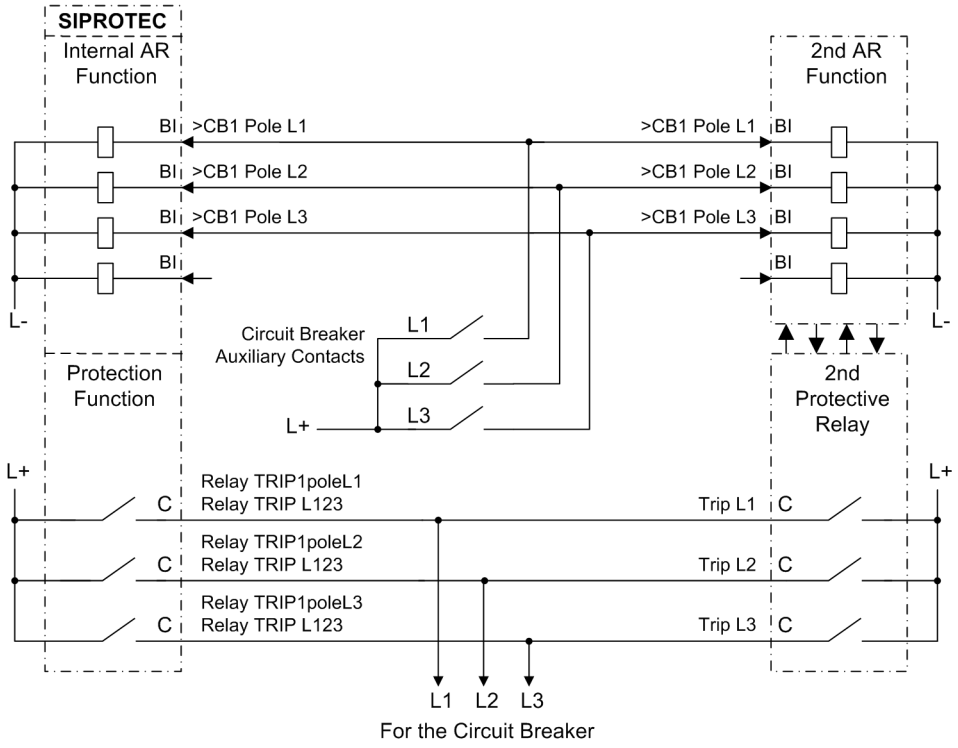

[anschlussbsp-2-schutzger-int-awe-100413, 1, en_GB]

Figure 2-14 Connection example for 2 protection devices with internal automatic reclosure function and minimum cross connection

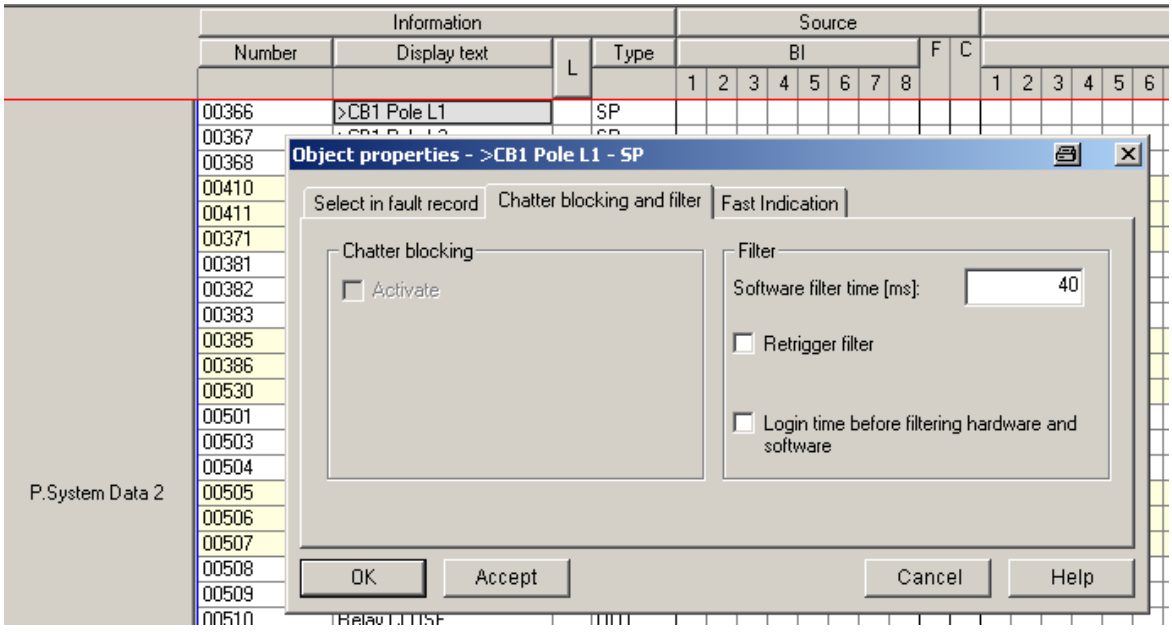

[digsi-einstellung-sw-filterzeit-090410-wlk, 1, en_GB]

Figure 2-15 Setting of the software filter time

2.2.2 Setting Notes

General

If the internal automatic reclosure function is to be used, the type of reclosure must be selected during the configuration of the functions (Section *2.1.1.2 Setting Notes*) in address 133 **Auto Reclose** and in address 134 the **AR control mode**.

Up to 8 reclosure attempts are allowed with the integrated automatic reclosure function. Whereas the settings in the addresses 3401 to 3441 are common to all reclosure cycles, the individual settings of the cycles are made from address 3450 onwards. It is therefore possible to set different individual parameters for the first four reclose cycles. From the fifth cycle onwards the parameters for the fourth cycle apply.

At address 3401 **AUTO RECLOSE** the automatic reclosure function can be turned ***ON*** or ***OFF***.

A prerequisite for automatic reclosure taking place after a trip due to a short-circuit is that the circuit breaker is ready for at least one OPEN-CLOSE-OPEN cycle at the time the automatic reclosure circuit is started, i.e. at the time of the first trip command. The readiness of the circuit breaker is signaled to the device via the binary input *>CB1 Ready* (No. 371). If no such signal is available, leave the setting under address 3402 **CB? 1.TRIP** = ***NO***, as automatic reclosure function would otherwise not be possible at all. If circuit breaker interrogation is possible, you should set **CB? 1.TRIP** = ***YES***.

Furthermore, the circuit breaker ready state can also be interrogated prior to every reclosure. This is set when setting the individual reclose cycles (see below).

To check that the ready status of the circuit breaker is regained during the dead times, you can set a circuit breaker ready monitoring time under address 3409 **CB TIME OUT**. The time is set slightly longer than the recovery time of the circuit breaker after an OPEN-CLOSE-OPEN cycle. If the circuit breaker is not ready again by the time this timer expires, no reclosure takes place and the automatic reclosure function is blocked dynamically.

Waiting for the circuit breaker to be ready can cause an increase of the dead times. Interrogation of a synchronism check (if used) can also delay reclosure. To avoid uncontrolled prolongation, it is possible to set a maximum prolongation of the dead time in this case in address 3411 **T-DEAD EXT.**. This prolongation is unlimited if the setting ∞ is applied. This parameter can only be altered in DIGSI at **Display Additional Settings**. Remember that longer dead times are only permissible after 3-pole tripping when no stability problems occur or a synchronism check takes place before reclosure.

The restraint time **T-RECLAIM** (address 3403) is the time after which the fault is considered eliminated following erfolgreichenreclosure. If a protection function provokes a new trip before this time has elapsed, the next reclosing cycle is started in case of multiple reclosure. If no further reclosing attempt is allowed, the last reclosure will be considered failed in the event of a new trip. The reclaim time must therefore be longer than the longest response time of a protection function which can start the automatic reclosure function. When operating the AR in ADT mode, it is possible to deactivate the reclaim time by setting it to 0 s.

A few seconds are generally sufficient. In areas with frequent thunderstorms or storms, a shorter blocking time may be necessary to avoid feeder lockout due to sequential lightning strikes or cable flashovers.

A longer reclaim time should be chosen where circuit breaker supervision is not possible (see above) during multiple reclosures, e.g. because of missing auxiliary contacts and information on the circuit breaker ready status. In this case, the reclaim time should be longer than the time required for the circuit breaker mechanism to be ready.

The blocking duration following manual close detection **T-BLOCK MC**(address 3404) must guarantee the circuit breaker to open and close reliably (0.5 s to 1 s). If a fault is detected by a protection function within this time after closing of the circuit breaker was detected, no reclosure takes place and a final 3-pole trip command is issued. If this is not desired, set address 3404 to **0**.

The options for handling evolving faults are described in Section *2.2 Automatic reclosure function (optional)* at margin heading “Handling evolving faults”. The treatment of sequential faults is not necessary on line ends where the adaptive dead time is applied (address 133 **Auto Reclose** = ***ADT***). The addresses 3406 and 3407 are then of no consequence and therefore not accessible.

You can define recognition of an evolving fault at address 3406 **EV. FLT. RECOG.**. **EV. FLT. RECOG. *with PICKUP*** means that during a dead time each pickup of a protection function will be interpreted as an evolving fault. With **EV. FLT. RECOG. *with TRIP*** a fault during a dead time is only interpreted as an evolving fault if it has led to a trip command by a protection function. The evolving fault detection with pickup

presupposes that a pickup signal of the external device is also connected to the 7VK61; otherwise an evolving fault can only be detected with the external trip command even if with ***with PICKUP*** was set here.

The reaction in response to sequential faults can be selected at address 3407. **EV. FLT. MODE** ***blocks AR*** means that no reclosure is performed after detection of a sequential fault. This is always useful when only 1-pole reclosure is to take place or when stability problems are expected due to the subsequent 3-pole dead time. If a 3-pole reclose cycle is to be initiated by tripping of the evolving fault, set **EV. FLT. MODE** = ***starts 3p AR***. In this case a separately adjustable 3-pole dead time is started with the 3-pole trip command due to the sequential fault. This is only useful if 3-pole reclosure is also permitted.

Address 3408 **T-Start MONITOR** monitors the reaction of the circuit breaker after a trip command. If the CB has not opened during this time (from the beginning of the trip command), the automatic reclosure is blocked dynamically. The criterion for circuit breaker opening is the position of the circuit breaker auxiliary contact or the disappearance of the trip command. If a circuit breaker failure protection (internal or external) is used on the feeder, this time should be shorter than the delay time of the circuit breaker failure protection so that no reclosure takes place if the circuit breaker fails.



NOTE

If the circuit breaker failure protection (BF) should perform a 1-pole TRIP repetition, the time setting of parameter 3408 **T-Start MONITOR** must be longer than the time set for parameter 3903 **1p-RETRIP (T1)**.

To enable that the busbar is tripped by the circuit breaker failure protection without preceding 3-pole coupling of the trip command (by AR or BF), the time set for 3408 **T-Start MONITOR** also has to be longer than the time set for 3906 **T2**. In this case, the AR must be blocked by a signal from the BF to prevent the AR from reclosing after a busbar TRIP. It is recommended to connect the signal 1494 *BF T2-TRIP(bus)* to the AR input 2703 *>AR block* via CFC.

If the reclosure command is transmitted to the opposite end, this transmission can be delayed by the time setting in address 3410 **T RemoteClose**. This transmission is only possible if the device operates with adaptive dead time at the Gegenende (address133 **Auto Reclose** = ***ADT***). This parameter is otherwise irrelevant. On the one hand, this delay serves to prevent the remote end device from reclosing unnecessarily when local reclosure is unsuccessful. On the other hand, it should be noted that the line is not available for energy transport until the remote end has also closed. Therefore this delay must be added to the dead time for consideration of the network stability.

Configuring the Automatic Reclosing Function

This configuration concerns the interaction between the protection and supplementary functions of the device and the auto reclose function. Here you can select which device functions will start the automatic reclosing function and which not.

Address 3425 **AR w/ BackUpO/C** i.e. with time overcurrent protection

For the functions which are to start the automatic reclosing function, the corresponding address is set to ***YES***, for the others to ***NO***. The other functions cannot start the automatic reclosing function because reclosing is not relevant here.

Forced 3-pole trip

If a blocking of the auto-reclosure occurs during the dead time of a 1-pole cycle without a previous 3-pole trip command, the circuit breaker remains open at one pole. With address 3430 **AR TRIP 3pole** it is possible to determine that the tripping logic of the device issues a 3-pole trip command in this case (pole discrepancy prevention for the CB poles). Set this address to ***YES*** if the CB can be tripped 1-pole and if it has no pole discrepancy protection. Nevertheless, the device preempts the pole discrepancy supervision of the CB because the forced 3-pole trip of the device is immediately initiated as soon as the reclosure is blocked following a 1-pole trip or if the CB auxiliary contacts report an implausible circuit breaker state (see also Section *2.2 Automatic reclosure function (optional)* at margin heading “Processing the circuit breaker auxiliary contacts”). The forced 3-pole trip is also activated when only 3-pole cycles are allowed, but a 1-pole trip is signaled externally via a binary input.

The forced 3-pole trip is unnecessary if only a common 3-pole control of the CB is possible.

Dead line check / Reduced dead time

Under 3431 the dead line check or the reduced dead time function can be activated. Either the one or the other can be used as the two options are contradictory. The voltage transformers must be connected to the line side of the circuit breaker if either of these modes is to be used. If this is not the case or if neither of the two functions is used, set **DLC or RDT** = ***WITHOUT***. If the adaptive dead time is used (see below), the parameters mentioned here are omitted because the adaptive dead time implies the properties of the reduced dead time.

DLC or RDT = ***DLC*** means that the dead line check of the line voltage is used. It only allows reclosing after it has been verified in advance that the line is dead. In this case, the phase-to-earth voltage limit is set in address 3441 **U-dead<** below which the line is considered voltage-free (disconnected). The setting is applied in Volts secondary. This value can be entered as a primary value when parameterizing with a PC and DIGSI. Address 3438 **T U-stable** determines the measuring time available for determining the no-voltage condition. Address 3440 is irrelevant here.

DLC or RDT = ***RDT*** means that the reduced dead time is used. This is described in detail in Section *2.2 Automatic reclosure function (optional)* at margin heading "Reduced Dead Time (RDT)". In this case, the phase-to-earth voltage limit is set in address 3440 **U-live>** above which the line is considered fault-free. The setting must be smaller than the lowest expected operating voltage. The setting is applied in Volts secondary. This value can be entered as a primary value when parameterizing with a PC and DIGSI. Address 3438 **T U-stable** defines the measuring time used to determine the voltage. It should be longer than any transient oscillations resulting from line energization. Address 3441 is irrelevant here.

Adaptive dead time (ADT)

When operating with adaptive dead time, it must be ensured in advance that **one** end per line operates with defined dead times and has an infeed. The other (or the others in multi-branch lines) may operate with adaptive dead time. It is essential that the voltage transformers are located on the line side of the circuit breaker. Details about this function can be found in Section *2.2 Automatic reclosure function (optional)* at margin heading "Adaptive Dead Time (ADT) and Close Command-transfer (Remote-CLOSE)".

For the line end with defined dead times the number of desired reclose cycles must be set during the configuration of the protection functions (Section *2.1.1 Functional Scope*) in address 133 **Auto Reclose**. For the devices operating with adaptive dead time **Auto Reclose** = ***ADT*** must be set during the configuration of the protection functions under address 133. Only the parameters described below are interrogated in the latter case. No settings are then made for the individual reclosure cycles. The adaptive dead time implies functionality of reduced dead time.

The adaptive dead time may be voltage-controlled or Remote–CLOSE–controlled. Both are possible at the same time. In the first case, reclosure takes place as soon as the returning voltage, after reclosure at the remote end, is detected. For this purpose the device must be connected to voltage transformers located on the line side. In the case of Remote-CLOSE, the autoreclosure waits until the Remote-CLOSE command is received from the remote end.

The action time **T-ACTION ADT** (address 3433) is started after any protection function has triggered the automatic reclosing function. The trip command must occur during this time. If no trip command is issued until the action time has expired, reclosing will not be initiated. Depending on the configuration of the protection functions, the action time may also be omitted; this applies especially when an initiating protection function has no fault detection signal.

The dead times are determined by the reclosure command of the device at the line end with the defined dead times. In cases where this reclosure command does not appear, e.g. because the reclosure was in the meantime blocked at this end, the readiness of the local device must return to the quiescent state at some time. This takes place after the maximum wait time **T-MAX ADT** (address 3434). It must be long enough to include the last reclosure of the remote end. In the case of single-shot reclosing, the sum of the maximum dead time plus reclaim time of the other device is sufficient. In the case of multiple reclosure, the worst case is that all reclosures of the other end except the last one are unsuccessful. The time of all these cycles must be taken into account. To save having to make exact calculations, it is possible to use the sum of all dead times and all protection operating times plus one reclaim time.

Under address 3435 **ADT 1p allowed** allowed it can be determined whether 1-pole tripping is allowed (provided that 1-pole tripping is possible). If ***NO***, the protection trips 3-pole for all fault types. If ***YES***, the actual trip signal of the starting protection functions is decisive. If the reclaim time is unequal to 0 s and 1-pole trip-

ping is allowed, 1- pole tripping will be prevented during the reclaim time. Each fault is thus disconnected in three poles while the reclaim time is active.

Address 3403 **T-RECLAIM** allows disabling the reclaim time in ADT mode. In doing so, the ADT cycle including its settings and release conditions is restarted after unsuccessful automatic reclosing. If the reclaim time is activated, the 1-pole trip permission at address 3435 and the protection releases are disabled while the reclaim time is running.

Under address 3436 **ADT CB? CLOSE** it can be determined whether circuit breaker ready is interrogated before reclosure after an adaptive dead time. With the setting ***YES***, the dead time may be extended if the circuit breaker is not ready for a CLOSE–OPEN–cycle when the dead time expires. The maximum extension that is possible is the circuit breaker monitoring time; this was set for all reclosure cycles under address 3409 (see above). Details about the circuit breaker monitoring can be found in the function description, Section *2.2 Automatic reclosure function (optional)*, at margin heading “Interrogation of the Circuit Breaker Ready State”.

If there is a danger of stability problems in the network during a 3-pole reclosure cycle, set address 3437 **ADT SynRequest** to ***YES***. In this case a check is made before reclosure following a 3-pole trip whether the voltages of feeder and busbar are sufficiently synchronous. This is only done on condition that either the internal synchronism and voltage check functions are available, or that an external device is available for synchronism and voltage check. If only 1-pole reclose cycles are executed or if no stability problems are expected during 3-pole dead times (e.g. due to closely meshed networks or in radial networks), set address 3437 to ***NO***.

Addresses 3438 and 3440 are only significant if the voltage-controlled adaptive dead time is used. 3440 **U-live>** is the phase-to-earth voltage limit above which the line is considered to be fault-free. The setting must be smaller than the lowest expected operating voltage. The setting is applied in volts secondary. This value can be entered as a primary value when parameterising with a PC and DIGSI. Address 3438 **T U-stable** defines the measuring time used to determine the voltage. It should be longer than any transient oscillations resulting from line energization.

The adaptive dead time is only available if address 106 **VT CONNECTION** is set to ***dreiphasig***.

1st reclose cycle

If working on a line with adaptive dead time, no further parameters are needed for the individual reclose cycles in this case. All the following parameters assigned to the individual cycles are then superfluous and inaccessible.

Address3450 **1.AR: START**is only available if the automatic reclosing function works in the operating mode with action time, i.e. is set during configuration of the protection functions at address 134 **AR control mode** = ***Pickup w/ Tact*** or ***Trip w/ Tact*** (the first setting only applies to 3-pole tripping). It determines whether automatic reclosure should be started at all with the first cycle. This address is included mainly due to the uniformity of the parameters for every reclosure attempt and is set to ***YES*** for the first cycle. If several cycles are performed, you can (at **AR control mode** = ***Trip ...***) set this parameter and different action times to control the effectiveness of the cycles. In Section *2.2 Automatic reclosure function (optional)* notes and examples are at margin heading “Action times”.

The action time **1.AR: T-ACTION** (address 3451) is started after a protection function has triggered the automatic reclosing function. The trip command must occur during this time. If no trip command is issued until the action time has expired, reclosing will not be initiated. Depending on the configuration of the protection functions, the action time may also be omitted; this applies especially when an initiating protection function has no fault detection signal.

Depending on the configured operating mode of the automatic reclosure (address 134 **AR control mode**) only the addresses 3456 and 3457 (if **AR control mode** = ***TRIP...***) or the addresses 3453 to 3455 are available (if **AR control mode** = ***Pickup. ...***).

In **AR control mode** = ***TRIP ...*** you can set different dead times for 1-pole and 3-pole reclose cycles. Whether 1-pole or 3-pole tripping is triggered depends solely on the initiating protection functions. 1-pole tripping is of course only possible if the device and the corresponding protection function are also capable of 1-pole tripping:

Table 2-1 **AR control mode** = TRIP ...

3456	**1.AR Tdead1Trip**	is the dead time after 1-pole tripping.

3457	**1.AR Tdead3Trip**	is the dead time after 3-pole tripping.

If you only want to allow a 1-pole reclose cycle, set the dead time for 3-pole tripping to ∞. If you only want to allow a 3-pole reclose cycle, set the dead time for 1-pole tripping to ∞, the protection then trips 3-pole for each fault type.

The dead time after 1-pole tripping (if set) **1.AR Tdead1Trip** (address 3456) should be long enough for the short-circuit arc to be extinguished and the surrounding air to be de-ionized so that the reclosure promises to be successful. The longer the line, the longer is this time due to the charging of the conductor capacitances. Standard durations are between 0.9 s and 1.5 s.

For 3-pole tripping (address 3457 **1.AR Tdead3Trip**) the network stability is the main concern. Since the disconnected line cannot transfer any synchronizing forces, only a short dead time is often permitted. Usual values are 0.3 s to 0.6 s. If the device is operating with a synchronism check (compare Section *2.4 Synchronism and voltage check (optional)*) a longer time may be tolerated under certain circumstances. Longer 3-pole dead times are also possible in radial networks.

For **AR control mode** = ***TRIP ...*** it is possible to make the dead times dependent on the type of fault detected by the initiating protection function(s).

Table 2-2 **AR control mode** = Trip ...

3453	**1.AR Tdead 1Flt**	is the dead time after 1-phase pickup.
3454	**1.AR Tdead 2Flt**	is the dead time after 2-phase pickup.
3455	**1.AR Tdead 3Flt**	is the dead time after 3-phase pickup.

If the dead time is to be the same for all fault types, set all three parameters the same. Note that these settings only cause different dead times for different pickups. The tripping can only be 3-pole.

If, when setting the reaction to sequential faults (see above at "General") you have set address 3407 **EV. FLT. MODE** ***starts 3p AR*** you can set a separate dead time for the 3-pole dead time after clearance of the sequential fault **1.AR: Tdead EV.** (address 3458). Stability aspects are also decisive here. Normally the setting constraints are similar to address3457 **1.AR Tdead3Trip**.

Under address 3459 **1.AR: CB? CLOSE** it can be determined whether the readiness of the circuit breaker ("circuit breaker ready") is interrogated before this first reclosure. With the setting ***YES***, the dead time may be extended if the circuit breaker is not ready for a CLOSE–OPEN–cycle when the dead time expires. The maximum extension that is possible is the circuit breaker monitoring time; this was set for all reclosure cycles under address 3409 **CB TIME OUT** (see above). Details about the circuit breaker monitoring can be found in the function description, Section *2.2 Automatic reclosure function (optional)*, at margin heading "Interrogation of the Circuit Breaker Ready State".

If there is a danger of stability problems in the network during a 3-pole reclosure cycle, set address3460 **1.AR SynRequest** to ***YES***. In this case, it is verified before each reclosure following a 3-pole trip whether the voltages of feeder and busbar are sufficiently synchronous. This is only done on condition that either the internal synchronism and voltage check functions are available, or that an external device is available for synchronism and voltage check. If only 1-pole reclose cycles are executed or if no stability problems are expected during 3-pole dead times (e.g. due to closely meshed networks or in radial networks), set address3460 to ***NO***.

2nd to 4th Reclose Cycle

If several cycles have been set in the configuration of the scope of protection functions, you can set individual reclosure parameters for the 2nd to 4th cycles. The same options are available as for the first cycle. Again, only some of the parameters shown below will be available depending on the selections made during configuration of the scope of protection functions.

For the 2nd cycle:

3461	**2.AR: START**	Start in 2nd cycle generally allowed
3462	**2.AR: T-ACTION**	Action time for the 2nd cycle
3464	**2.AR Tdead 1Flt**	Dead time after 1-phase pickup
3465	**2.AR Tdead 2Flt**	Dead time after 2-phase pickup
3466	**2.AR Tdead 3Flt**	Dead time after 3-phase pickup

3467	**2.AR Tdead1Trip**	Dead time after 1-pole tripping
3468	**2.AR Tdead3Trip**	Dead time after 3-pole tripping
3469	**2.AR: Tdead EV.**	Dead time after evolving fault
3470	**2.AR: CB? CLOSE**	CB ready interrogation before reclosing
3471	**2.AR SynRequest**	Sync. check after 3-pole tripping

For the 3rd cycle:

3472	**3.AR: START**	Start in 3rd cycle generally allowed
3473	**3.AR: T-ACTION**	Action time for the 3rd cycle
3475	**3.AR Tdead 1Flt**	Dead time after 1-phase pickup
3476	**3.AR Tdead 2Flt**	Dead time after 2-phase pickup
3477	**3.AR Tdead 3Flt**	Dead time after 3-phase pickup
3478	**3.AR Tdead1Trip**	Dead time after 1-pole tripping
3479	**3.AR Tdead3Trip**	Dead time after 3-pole tripping
3480	**3.AR: Tdead EV.**	Dead time after evolving fault
3481	**3.AR: CB? CLOSE**	CB ready interrogation before reclosing
3482	**3.AR SynRequest**	Sync. check after 3-pole tripping

For the 4th cycle:

3483	**4.AR: START**	Start in 4th cycle generally allowed
3484	**4.AR: T-ACTION**	Action time for the 4th cycle
3486	**4.AR Tdead 1Flt**	Dead time after 1-phase pickup
3487	**4.AR Tdead 2Flt**	Dead time after 2-phase pickup
3488	**4.AR Tdead 3Flt**	Dead time after 3-phase pickup
3489	**4.AR Tdead1Trip**	Dead time after 1-pole tripping
3490	**4.AR Tdead3Trip**	Dead time after 3-pole tripping
3491	**4.AR: Tdead EV.**	Dead time after evolving fault
3492	**4.AR: CB? CLOSE**	CB ready interrogation before reclosing
3493	**4.AR SynRequest**	Sync. check after 3-pole tripping

5th to 8th Reclose Cycle

If more than four cycles were set during configuration of the functional scope, the dead times preceding the fifth (5th) through the ninth (9th) reclosing attempts are equal to the open circuit breaker time which precedes the fourth (4th) reclosing attempt.

Notes on the Information List

The most important information about automatic reclosure is briefly explained insofar as it was not mentioned in the following lists or described in detail in the preceding text.

>BLK 1.AR-cycle (No. 2742) to *>BLK 4.-n. AR* (No. 2745)

The respective auto-reclose cycle is blocked. If the blocking state already exists when the automatic reclosure function is initiated, the blocked cycle is not executed and may be skipped (if other cycles are permitted). The same applies if the automatic reclosure function is started (running), but not internally blocked. If the block signal of a cycle appears while this cycle is being executed (in progress), the automatic reclosure function is blocked dynamically; no further automatic reclosures cycles are then executed.

AR 1.CycZoneRel (No. 2889) to *AR 4.CycZoneRel* (No. 2892)

The automatic reclosure is ready for the respective reclosure cycle. This information indicates which cycle will be run next. For example, external protection functions can use this information to release accelerated or overreaching trip stages prior to the corresponding reclose cycle.

AR is blocked (No. 2783)

The automatic reclosure is blocked (e.g. circuit breaker not ready). This information indicates to the operational information system that in the event of an upcoming system fault there will be a final trip, i.e. without reclosure. If the automatic reclosure has been started, this information does not appear.

AR not ready (No. 2784)

The automatic reclosure is not ready for reclosure at the moment. In addition to the *AR is blocked* mentioned above (No. 2783)there are also obstructions during the course of the auto-reclosure cycles such as "action time" elapsed or "last reclaim time running". This information is particularly helpful during testing because no protection test cycle with reclosure may be initiated during this state.

AR in progress (No. 2801)

This information appears following the start of the automatic reclosure function, i.e. with the first trip command that can start the automatic reclosure function. If this reclosure was successful (or any in the case of multiple cycles), the information is reset with the expiry of the last reclaim time. If no reclosure was successful or if reclosure was blocked, it ends with the last – the final – trip command.

AR Sync.Request (No. 2865)

Measuring request to an external synchronism check device. The information appears at the end of a dead time subsequent to 3-pole tripping if a synchronism request was parameterized for the corresponding cycle. Reclosure only takes place when the synchronism check device has provided the release signal *>Sync.release* (No. 2731.

>Sync.release (No. 2731)

Release of reclosure by an external synchronism check device if this was requested by the output information *AR Sync.Request* (No. 2865).

2.2.3 Settings

Addresses which have an appended "A" can only be changed with DIGSI, under "Additional Settings".

Addr.	Parameter	Setting Options	Default Setting	Comments
3401	AUTO RECLOSE	OFF ON	ON	Auto-Reclose function
3402	CB? 1.TRIP	YES NO	NO	CB ready interrogation at 1st trip
3403	T-RECLAIM	0.50 .. 300.00 sec	3.00 sec	Reclaim time after successful AR cycle
3403	T-RECLAIM	0.50 .. 300.00 sec	3.00 sec	Reclaim time after successful AR cycle
3404	T-BLOCK MC	0.50 .. 300.00 sec	1.00 sec	AR blocking duration after manual close
3406	EV. FLT. RECOG.	with PICKUP with TRIP	with TRIP	Evolving fault recognition
3407	EV. FLT. MODE	blocks AR starts 3p AR	starts 3p AR	Evolving fault (during the dead time)
3408	T-Start MONITOR	0.01 .. 300.00 sec	0.20 sec	AR start-signal monitoring time
3409	CB TIME OUT	0.01 .. 300.00 sec	3.00 sec	Circuit Breaker (CB) Supervision Time
3410	T RemoteClose	0.00 .. 300.00 sec	2147483647 sec	Send delay for remote close command
3411A	T-DEAD EXT.	0.50 .. 300.00 sec	2147483647 sec	Maximum dead time extension
3425	AR w/ BackUpO/C	YES NO	YES	AR with back-up overcurrent
3430	AR TRIP 3pole	YES NO	YES	3pole TRIP by AR

Addr.	Parameter	Setting Options	Default Setting	Comments
3430	AR TRIP 3pole	YES NO	YES	3pole TRIP by AR
3431	DLC or RDT	WITHOUT RDT DLC	WITHOUT	Dead Line Check or Reduced Dead Time
3433	T-ACTION ADT	0.01 .. 300.00 sec	0.20 sec	Action time
3434	T-MAX ADT	0.50 .. 3000.00 sec	5.00 sec	Maximum dead time
3435	ADT 1p allowed	YES NO	NO	1pole TRIP allowed
3436	ADT CB? CLOSE	YES NO	NO	CB ready interrogation before reclosing
3437	ADT SynRequest	YES NO	NO	Request for synchro-check after 3pole AR
3438	T U-stable	0.10 .. 30.00 sec	0.10 sec	Supervision time for dead/ live voltage
3438	T U-stable	0.10 .. 30.00 sec	0.10 sec	Supervision time for dead/ live voltage
3440	U-live>	30 .. 90 V	48 V	Voltage threshold for live line or bus
3440	U-live>	30 .. 90 V	48 V	Voltage threshold for live line or bus
3441	U-dead<	2 .. 70 V	30 V	Voltage threshold for dead line or bus
3441	U-dead<	2 .. 70 V	30 V	Voltage threshold for dead line or bus
3450	1.AR: START	YES NO	YES	Start of AR allowed in this cycle
3451	1.AR: T-ACTION	0.01 .. 300.00 sec	0.20 sec	Action time
3453	1.AR Tdead 1Flt	0.01 .. 1800.00 sec	1.20 sec	Dead time after 1phase faults
3454	1.AR Tdead 2Flt	0.01 .. 1800.00 sec	1.20 sec	Dead time after 2phase faults
3455	1.AR Tdead 3Flt	0.01 .. 1800.00 sec	0.50 sec	Dead time after 3phase faults
3456	1.AR Tdead1Trip	0.01 .. 1800.00 sec	1.20 sec	Dead time after 1pole trip
3457	1.AR Tdead3Trip	0.01 .. 1800.00 sec	0.50 sec	Dead time after 3pole trip
3458	1.AR: Tdead EV.	0.01 .. 1800.00 sec	1.20 sec	Dead time after evolving fault
3459	1.AR: CB? CLOSE	YES NO	NO	CB ready interrogation before reclosing
3460	1.AR SynRequest	YES NO	NO	Request for synchro-check after 3pole AR
3461	2.AR: START	YES NO	NO	AR start allowed in this cycle
3462	2.AR: T-ACTION	0.01 .. 300.00 sec	0.20 sec	Action time
3464	2.AR Tdead 1Flt	0.01 .. 1800.00 sec	1.20 sec	Dead time after 1phase faults
3465	2.AR Tdead 2Flt	0.01 .. 1800.00 sec	1.20 sec	Dead time after 2phase faults
3466	2.AR Tdead 3Flt	0.01 .. 1800.00 sec	0.50 sec	Dead time after 3phase faults
3467	2.AR Tdead1Trip	0.01 .. 1800.00 sec	2147483647 sec	Dead time after 1pole trip
3468	2.AR Tdead3Trip	0.01 .. 1800.00 sec	0.50 sec	Dead time after 3pole trip
3469	2.AR: Tdead EV.	0.01 .. 1800.00 sec	1.20 sec	Dead time after evolving fault

Addr.	Parameter	Setting Options	Default Setting	Comments
3470	2.AR: CB? CLOSE	YES NO	NO	CB ready interrogation before reclosing
3471	2.AR SynRequest	YES NO	NO	Request for synchro-check after 3pole AR
3472	3.AR: START	YES NO	NO	AR start allowed in this cycle
3473	3.AR: T-ACTION	0.01 .. 300.00 sec	0.20 sec	Action time
3475	3.AR Tdead 1Flt	0.01 .. 1800.00 sec	1.20 sec	Dead time after 1phase faults
3476	3.AR Tdead 2Flt	0.01 .. 1800.00 sec	1.20 sec	Dead time after 2phase faults
3477	3.AR Tdead 3Flt	0.01 .. 1800.00 sec	0.50 sec	Dead time after 3phase faults
3478	3.AR Tdead1Trip	0.01 .. 1800.00 sec	2147483647 sec	Dead time after 1pole trip
3479	3.AR Tdead3Trip	0.01 .. 1800.00 sec	0.50 sec	Dead time after 3pole trip
3480	3.AR: Tdead EV.	0.01 .. 1800.00 sec	1.20 sec	Dead time after evolving fault
3481	3.AR: CB? CLOSE	YES NO	NO	CB ready interrogation before reclosing
3482	3.AR SynRequest	YES NO	NO	Request for synchro-check after 3pole AR
3483	4.AR: START	YES NO	NO	AR start allowed in this cycle
3484	4.AR: T-ACTION	0.01 .. 300.00 sec	0.20 sec	Action time
3486	4.AR Tdead 1Flt	0.01 .. 1800.00 sec	1.20 sec	Dead time after 1phase faults
3487	4.AR Tdead 2Flt	0.01 .. 1800.00 sec	1.20 sec	Dead time after 2phase faults
3488	4.AR Tdead 3Flt	0.01 .. 1800.00 sec	0.50 sec	Dead time after 3phase faults
3489	4.AR Tdead1Trip	0.01 .. 1800.00 sec	2147483647 sec	Dead time after 1pole trip
3490	4.AR Tdead3Trip	0.01 .. 1800.00 sec	0.50 sec	Dead time after 3pole trip
3491	4.AR: Tdead EV.	0.01 .. 1800.00 sec	1.20 sec	Dead time after evolving fault
3492	4.AR: CB? CLOSE	YES NO	NO	CB ready interrogation before reclosing
3493	4.AR SynRequest	YES NO	NO	Request for synchro-check after 3pole AR

2.2.4 Information List

No.	Information	Type of Information	Comments
2701	>AR on	SP	>AR: Switch on auto-reclose function
2702	>AR off	SP	>AR: Switch off auto-reclose function
2703	>AR block	SP	>AR: Block auto-reclose function
2711	>AR Start	SP	>External start of internal Auto reclose
2712	>Trip L1 AR	SP	>AR: External trip L1 for AR start
2713	>Trip L2 AR	SP	>AR: External trip L2 for AR start
2714	>Trip L3 AR	SP	>AR: External trip L3 for AR start
2715	>Trip 1pole AR	SP	>AR: External 1pole trip for AR start
2716	>Trip 3pole AR	SP	>AR: External 3pole trip for AR start
2727	>AR RemoteClose	SP	>AR: Remote Close signal
2731	>Sync.release	SP	>AR: Sync. release from ext. sync.-check

No.	Information	Type of Informa-tion	Comments
2737	>BLOCK 1pole AR	SP	>AR: Block 1pole AR-cycle
2738	>BLOCK 3pole AR	SP	>AR: Block 3pole AR-cycle
2739	>BLK 1phase AR	SP	>AR: Block 1phase-fault AR-cycle
2740	>BLK 2phase AR	SP	>AR: Block 2phase-fault AR-cycle
2741	>BLK 3phase AR	SP	>AR: Block 3phase-fault AR-cycle
2742	>BLK 1.AR-cycle	SP	>AR: Block 1st AR-cycle
2743	>BLK 2.AR-cycle	SP	>AR: Block 2nd AR-cycle
2744	>BLK 3.AR-cycle	SP	>AR: Block 3rd AR-cycle
2745	>BLK 4.-n. AR	SP	>AR: Block 4th and higher AR-cycles
2746	>Trip for AR	SP	>AR: External Trip for AR start
2747	>Pickup L1 AR	SP	>AR: External pickup L1 for AR start
2748	>Pickup L2 AR	SP	>AR: External pickup L2 for AR start
2749	>Pickup L3 AR	SP	>AR: External pickup L3 for AR start
2750	>Pickup 1ph AR	SP	>AR: External pickup 1phase for AR start
2751	>Pickup 2ph AR	SP	>AR: External pickup 2phase for AR start
2752	>Pickup 3ph AR	SP	>AR: External pickup 3phase for AR start
2781	AR off	OUT	AR: Auto-reclose is switched off
2782	AR on	IntSP	AR: Auto-reclose is switched on
2783	AR is blocked	OUT	AR: Auto-reclose is blocked
2784	AR not ready	OUT	AR: Auto-reclose is not ready
2787	CB not ready	OUT	AR: Circuit breaker not ready
2788	AR T-CBreadyExp	OUT	AR: CB ready monitoring window expired
2796	AR on/off BI	IntSP	AR: Auto-reclose ON/OFF via BI
2801	AR in progress	OUT	AR: Auto-reclose in progress
2809	AR T-Start Exp	OUT	AR: Start-signal monitoring time expired
2810	AR TdeadMax Exp	OUT	AR: Maximum dead time expired
2818	AR evolving Flt	OUT	AR: Evolving fault recognition
2820	AR Program1pole	OUT	AR is set to operate after 1p trip only
2821	AR Td. evol.Flt	OUT	AR dead time after evolving fault
2839	AR Tdead 1pTrip	OUT	AR dead time after 1pole trip running
2840	AR Tdead 3pTrip	OUT	AR dead time after 3pole trip running
2841	AR Tdead 1pFlt	OUT	AR dead time after 1phase fault running
2842	AR Tdead 2pFlt	OUT	AR dead time after 2phase fault running
2843	AR Tdead 3pFlt	OUT	AR dead time after 3phase fault running
2844	AR 1stCyc. run.	OUT	AR 1st cycle running
2845	AR 2ndCyc. run.	OUT	AR 2nd cycle running
2846	AR 3rdCyc. run.	OUT	AR 3rd cycle running
2847	AR 4thCyc. run.	OUT	AR 4th or higher cycle running
2848	AR ADT run.	OUT	AR cycle is running in ADT mode
2851	AR CLOSE Cmd.	OUT	AR: Close command
2852	AR Close1.Cyc1p	OUT	AR: Close command after 1pole, 1st cycle
2853	AR Close1.Cyc3p	OUT	AR: Close command after 3pole, 1st cycle
2854	AR Close 2.Cyc	OUT	AR: Close command 2nd cycle (and higher)
2857	AR CLOSE RDT TD	OUT	AR: RDT Close command after TDEADxTRIP
2861	AR T-Recl. run.	OUT	AR: Reclaim time is running

No.	Information	Type of Information	Comments
2862	AR successful	OUT	AR successful
2864	AR 1p Trip Perm	OUT	AR: 1pole trip permitted by internal AR
2865	AR Sync.Request	OUT	AR: Synchro-check request
2871	AR TRIP 3pole	OUT	AR: TRIP command 3pole
2889	AR 1.CycZoneRel	OUT	AR 1st cycle zone extension release
2890	AR 2.CycZoneRel	OUT	AR 2nd cycle zone extension release
2891	AR 3.CycZoneRel	OUT	AR 3rd cycle zone extension release
2892	AR 4.CycZoneRel	OUT	AR 4th cycle zone extension release
2893	AR Zone Release	OUT	AR zone extension (general)
2894	AR Remote Close	OUT	AR Remote close signal send

2.3 Overcurrent protection (optional)

The device 7VK61 features a time overcurrent protection function with four independent stages that can be combined freely with one another.

2.3.1 General

The overcurent protection has a total of 4 stages for each phase current and four stages for the earth current, these are:

- 2 overcurrent stages with a definite time characteristic (O/C with DT),
- 1 overcurrent stage with inverse time characteristic (IDMT),
- 1 additional overcurrent stage which is preferably used as a stub protection, but which can be applied as an additional normal definite time delayed stage. With the device variants for the region Germany (10th digit of ordering code = A) this stage is only available if the setting 126 ***TOC IEC /w 3ST*** is active.

These 4 stages are independent from each other and are freely combinable. Blocking by external criteria via binary input is possible as well as rapid (non-delayed) tripping (e.g. by an external automatic reclose device). During energization of the protected feeder onto a dead fault it is also possible to release any stage, or also several, for non-delayed tripping. If you do not need all stages, each individual stage can be deactivated by setting the pickup threshold to ∞.

2.3.2 Functional Description

Measured Values

The phase currents are fed to the device via the input transformers of the measuring input. Earth current $3 \cdot I_0$ is either measured directly or calculated depending on the ordered device version and usage of the fourth current input I_4 of the device.

If I_4 is connected to the starpoint of the current transformer set, the earth current will be available directly as measured quantity.

If the fourth current input I_4 is not connected as earth current transformer, the device will calculate the earth current from the phase currents. This requires, of course, all three phase currents from a set of three star-connected current transformers to be available and connected to the device.

Definite time high set current stage I>>

Each phase current is compared with the setting value **Iph>>** (address 2610) the earth current is compared with **3I0>> PICKUP** (address2612). A trip command is issued after pickup of an element and expiration of the associated time delays **T Iph>>** (address 2611) or **T 3I0>>** (address 2613). The dropout value is about 7 % below the pickup value, but at least 1,8 % of the rated current.

The figure below shows the logic diagram of the I stages. They can be blocked via binary input *>BLOCK O/C I>>*. The binary input *>O/C InstTRIP* and the function block "switch-onto-fault" are common to all stages and described below. They may, however, separately affect the phase and/or ground current elements. This is accomplished with the following setting parameters:

- **I>> InstTrip BI** (Address 2614) determines whether a non-delayed trip of this element via binary input *>O/C InstTRIP* is possible (***YES***) or not possible (***NO***) and
- **I>> SOTF** (address2615) whether during switching onto a fault tripping shall be instantaneous (***YES***) or not (***NO***).

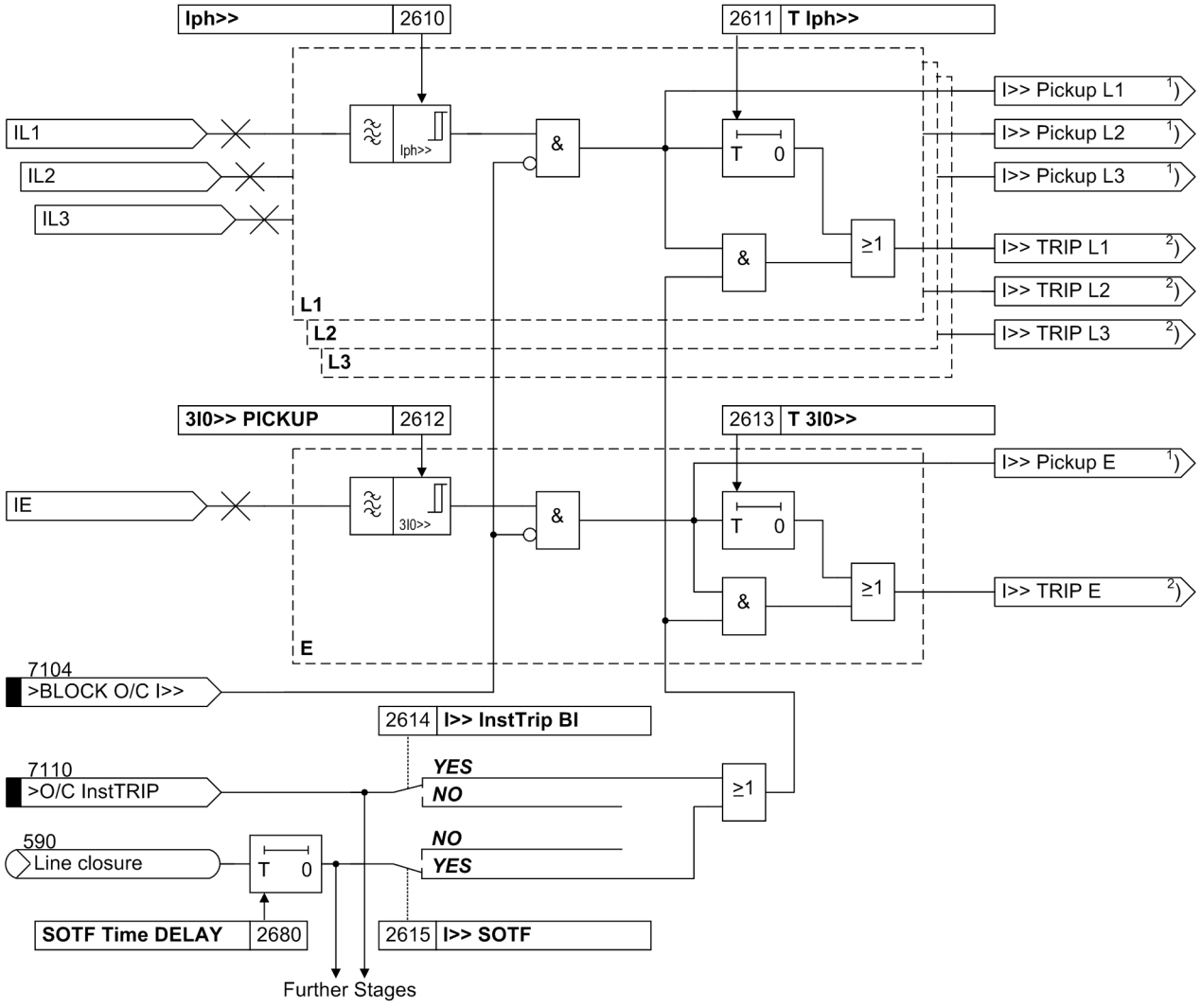

[logikdiagramm-i-vg-stufe-wlk-310702, 1, en_GB]

Figure 2-16 Logic diagram of the I stage

1) The output indications associated with the pickup signals can be found in *Table 2-3*
2) The output indications associated with the trip signals can be found in *Table 2-4*

Definite time overcurrent stage I>

The logic of the overcurrent stage I is the same as that of the I stages. In all references **Iph>>** must merely be replaced by **Iph>** or **3I0>> PICKUP** by **3I0>**. In all other respects *Figure 2-16* applies.

Inverse time overcurrent stage I_p

The logic of the inverse overcurrent stage also operates chiefly in the same way as the remaining stages. However, the time delay is calculated here based on the type of the set characteristic, the intensity of the current and a time multiplier (following figure). A pre-selection of the available characteristics was already carried out during the configuration of the protection functions. Furthermore, an additional constant time delay **T Ip Add** (address 2646) or **T 3I0p Add** (address 2656) may be selected, which is added to the inverse time. The possible characteristics are shown in the Technical Data.

The following figure shows the logic diagram. The setting addresses of the IEC characteristic curves are shown by way of example. In the setting notes, the different setting addresses are described in detail.

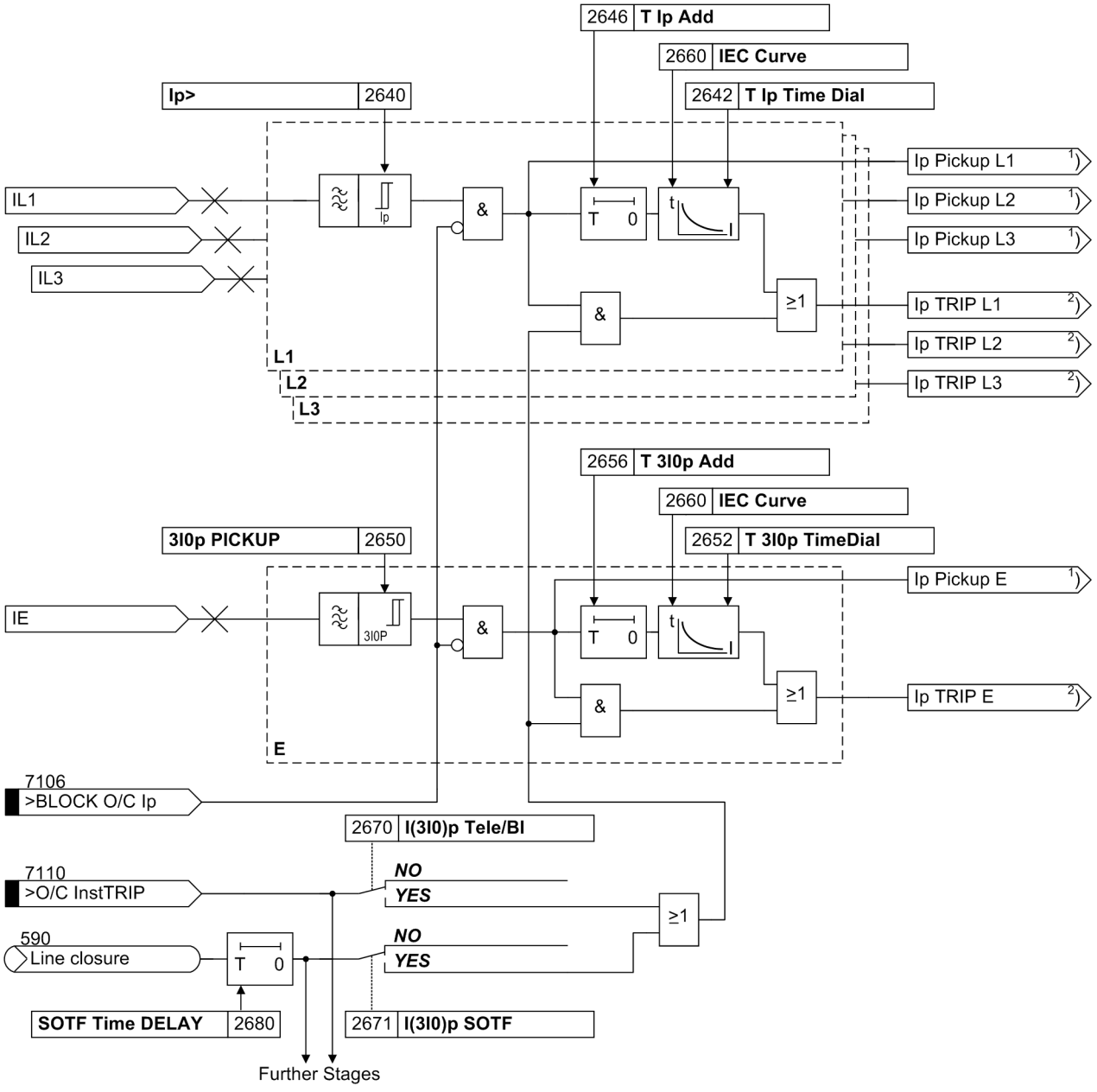

[logikdia-ip-stufe-amz-iec-wlk-310702, 1, en_GB]

Figure 2-17 Logic diagram of the I_p stage (inverse time overcurrent protection), for example IEC characteristics

1) The output indications associated with the pickup signals can be found in *Table 2-3*
2) The output indications associated with the trip signals can be found in *Table 2-4*

End fault stage

A further overcurrent stage is the stub protection. It can, however, also be used as a normal additional definite time overcurrent stage, as it functions independently of the other stages.

A stub fault is a short-circuit located between the current transformer set and the line isolator. It is of particular importance with the $1^1/_2$ circuit breaker arrangements.

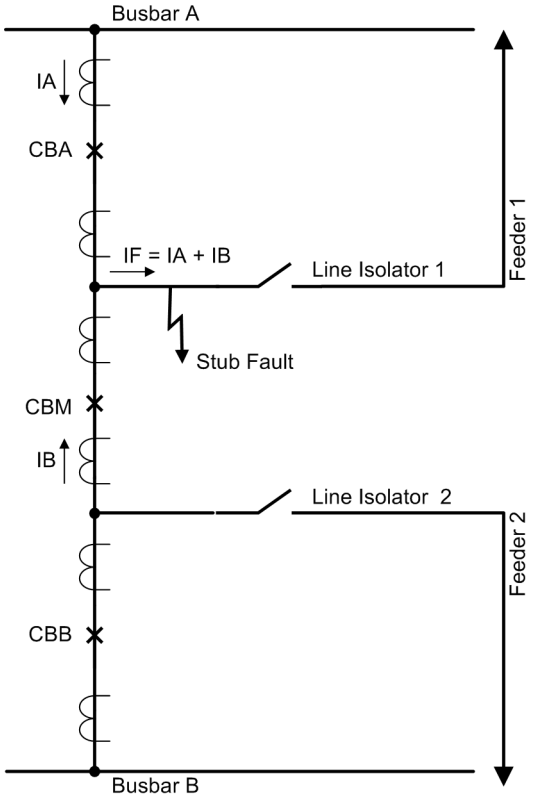

[endfehler-eineinhalb-ls-wlk-0702, 1, en_GB]

Figure 2-18 Stub fault at an $1^1/_2$ circuit breaker arrangement

If a short circuit current $\underline{I}_A$ and/or $\underline{I}_B$ flows while the line isolator 1 is open, this implies that a fault in the stub range between the current transformers $\underline{I}_A$, $\underline{I}_B$ and the line isolator exists. The circuit breakers CBA and CBC that carry the short-circuit current can be tripped without delay. The two sets of current transformers are connected in parallel such that the current sum $\underline{I}_A + \underline{I}_B$ represents the current flowing towards the line isolator.

The stub protection is an overcurrent protection which is only in service when the state of the line isolator indicates the open condition via a binary input *>I-STUB ENABLE*. The binary input must therefore be operated via an auxiliary contact of the isolator. In the case of a closed line isolator, the stub protection is out of service. For more information see the next logic diagram.

If the stub protection stage is to be used as a normal definite time overcurrent stage, the binary input *>BLOCK I-STUB* should be left without allocation or routing (matrix). However the release input *>I-STUB ENABLE* must be continually activated (either via a binary input or via the user definable logic functions CFC).

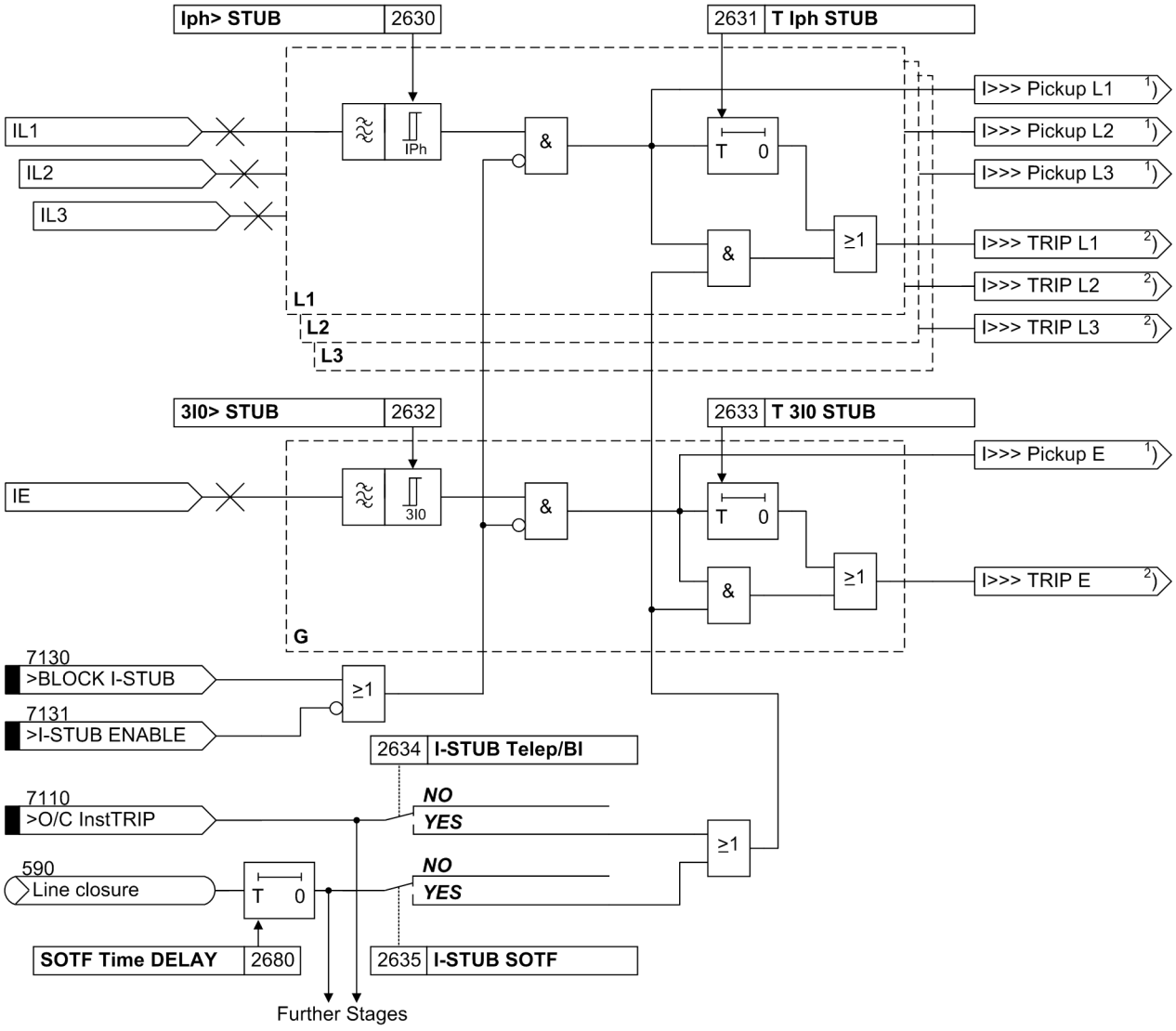

[logikdiagramm-endfehlerschutz-wlk-310702, 1, en_GB]

Figure 2-19 Logic diagram of stub fault protection

1) The output indications associated with the pickup signals can be found in *Table 2-3*
2) The output indications associated with the trip signals can be found in *Table 2-4*

Instantaneous tripping before automatic reclosure

If automatic reclosure is to be carried out, quick fault clearance before reclosure is usually desirable. A release signal from an external automatic reclosure device can be injected via binary input*>O/C InstTRIP*. The interconnection of the internal automatic reclose function is performed via an additional CFC logic, which typically connects the output signal 2889 *AR 1.CycZoneRel* with the input signal *>O/C InstTRIP*. Any stage of the overcurrent protection can thus perform an instantaneous trip before reclosure via the parameter ***Telep / BI ....***

Switching onto a fault

To achieve fast tripping of the circuit breaker in the event of an earth fault, the manual CLOSE detection function can be used. The time overcurrent protection can then trip three-pole without delay or with a reduced delay. It can be determined via parameter settings for which stage(s) the instantaneous tripping following energization applies (see also the logic diagrams *Figure 2-16*, *Figure 2-17* and *Figure 2-19*).

Pickup logic and tripping logic

The pickup signals of the individual phases (or the ground) and of the stages are linked in such a way that both the phase information and the stage which has picked up are output (*Table 2-3*).

Table 2-3 Pickup signals of the individual phases

Internal Indication	Figure	Output Indication	No.
I>> Trip L1 I> Trip L1 Ip Trip L1 I>>> Trip L1	*Figure 2-16* *Figure 2-17* *Figure 2-19*	*O/C Pickup L1*	7162
I>> Trip L2 I> Trip L2 Ip Trip L2 I>>> Trip L2	*Figure 2-16* *Figure 2-17* *Figure 2-19*	*O/C Pickup L2*	7163
I>> Trip L3 I> Trip L3 Ip Trip L3 I>>> Trip L3	*Figure 2-16* *Figure 2-17* *Figure 2-19*	*O/C Pickup L3*	7164
I>> Trip E I> Trip E Ip TripE I>>> Trip E	*Figure 2-16* *Figure 2-17* *Figure 2-19*	*O/C Pickup E*	7165
I>> Trip L1 I>> Trip L2 I>> Trip L3 I>> Trip E	*Figure 2-16* *Figure 2-16* *Figure 2-16* *Figure 2-16*	*O/C PICKUP I>>*	7191
I> Trip L1 I> Trip L2 I> Trip L3 I> Trip E		*O/C PICKUP I>*	7192
Ip Trip L1 Ip Trip L2 Ip Trip L3 Ip Trip E	*Figure 2-17* *Figure 2-17* *Figure 2-17* *Figure 2-17*	*O/C PICKUP Ip*	7193
I>>> Trip L1 I>>> Trip L2 I>>> Trip L3 I>>> Trip E	*Figure 2-19* *Figure 2-19* *Figure 2-19* *Figure 2-19*	*I-STUB PICKUP*	7201
(All pickups)		*O/C PICKUP*	7161

For the tripping signals (*Table 2-4*) the stage which caused the tripping is also output. If the device has the option to trip single-pole and if this option has been activated, the pole which has been tripped is also indicated in case of single-pole tripping (refer also to Section *2.8.1 Function Control* "Tripping Logic of the Entire Device").

Table 2-4 Trip signals of the single phases

Internal Indication	Figure	Output Indication	No.
I>> OFF L1 I> OFF L1 Ip OFF L1 I>>> OFF L1	*Figure 2-16* *Figure 2-17* *Figure 2-19*	*O/C TRIP 1p.L1* or *O/C TRIP L123*	7212 or 7215
I>> OFF L2 I> OFF L2 Ip OFF L2 I>>> OFF L2	*Figure 2-16* *Figure 2-17* *Figure 2-19*	*O/C TRIP 1p.L2* or *O/C TRIP L123*	7213 or 7215
I>> OFF L3 I> OFF L3 Ip OFF L3 I>>> OFF L3	*Figure 2-16* *Figure 2-17* *Figure 2-19*	*O/C TRIP 1p.L3* or *O/C TRIP L123*	7214 or 7215
I>> OFF E I> OFF E Ip OFFE I>>> OFF E	*Figure 2-16* *Figure 2-17* *Figure 2-19*	*O/C TRIP L123*	7215
I>> OFF L1 I>> OFF L2 I>> OFF L3 I>> OFF E	*Figure 2-16* *Figure 2-16* *Figure 2-16* *Figure 2-16*	*O/C TRIP I>>*	7221
I> OFF L1 I> OFF L2 I> OFF L3 I> OFF E		*O/C TRIP I>*	7222
Ip OFF L1 Ip OFF L2 Ip OFF L3 Ip OFF E	*Figure 2-17* *Figure 2-17* *Figure 2-17* *Figure 2-17*	*O/C TRIP Ip*	7223
I>>> OFF L1 I>>> OFF L2 I>>> OFF L3 I>>> OFF E	*Figure 2-19* *Figure 2-19* *Figure 2-19* *Figure 2-19*	*I-STUB TRIP*	7235
(General TRIP)		*O/C TRIP*	7211

2.3.3 Setting Notes

General

During configuration of the scope of functions for the device (address 126) the available characteristics were determined. Depending on the configuration and the order variant, only those parameters that apply to the selected characteristics are accessible in the procedures described below.

At address 2601 **Operating Mode** you switch time overcurrent protection ***ON*** or ***OFF***.

If not all stages are required, each individual stage can be deactivated by setting the pickup threshold to ∞. But if you set only an associated time delay to ∞ this does not suppress the pickup signals but prevents the timers from running.

One or several stages can be set as instantaneous tripping stages when switching onto a fault. This is chosen during the setting of the individual stages (see below). To avoid a spurious pick-up due to transient overcurrents, the delay **SOTF Time DELAY** (address 2680) can be set. Typically, the presetting of **0**s is correct. A

short delay can be useful in case of long cables for which high inrush currents can be expected, or for transformers. This delay depends on the intensity and the duration of the transient overcurrents as well as on which stages were selected for the fast switch onto fault clearance.

High current stages Iph>>, 3I0>>

The I>>-stages **Iph>>** (address 2610) and **3I0>> PICKUP** (address 2612) together with the I>-stages or the Ip stages from a two0stage characteristic curve. Of course, all three stages can be combined as well. If one stage is not required, the pickup value has to be set to ∞. The I>> stages always operate with a defined delay time.

If the I>> stages are used for instantaneous tripping before the automatic reclosure (via CFC interconnection), the current setting corresponds to the I> or Ip stages (see below). In this case, only the different delay times are of interest. The times **T Iph>>** (address 2611) and **T 3I0>>** (address 2613) can then be set to **0** s or a very low value, as the fast clearance of the fault takes priority over the selectivity before the automatic reclosure is initiated. These stages have to be blocked before final trip in order to achieve the selectivity.

For very long lines with a small source impedance or on applications with large reactances (e.g. transformers, series reactors), theI>> stages can also be used for current grading. In this case, they must be set in such a way that they do not pick up in case of a fault at the end of the line. The times can then be set to **0**s or to a small value.

When using a personal computer and DIGSI to apply the settings, these can be optionally entered as primary or secondary values. For settings with secondary values the currents will be converted for the secondary side of the current transformers.

Calculation Example:

110 kV overhead line 150 mm²:

s (length)	= 60 km
R_1/s	= 0.19 Ω/km
X_1/s	= 0.42 Ω/km

Short-circuit power at the beginning of the line:

S_k'	= 2.5 GVA
Current Transformer	600 A/5 A

From that the line impedance Z_L and the source impedance Z_S are calculated:

$$\frac{Z_L}{s} = \sqrt{0.19^2 + 0.42^2}\ \frac{\Omega}{km} = 0.46\ \frac{\Omega}{km}$$

[fo_7sa6_fkt-UMZ_bsp, 1, en_GB]

$$Z_L = 0.46\ \Omega/km \cdot 60\ km = 27.66\ \Omega$$

$$Z_S = \frac{(110\ kV)^2}{2500\ MVA} = 4.84\ \Omega$$

[formel-ueberstromzeit-hochstrom-1-oz-010802, 1, en_GB]

The 3-phase short-circuit current at the end of the line is $I_{k\,end}$:

$$I_{F\,End} = \frac{1.1 \cdot U_N}{\sqrt{3} \cdot (Z_S + Z_L)} = \frac{1.1 \cdot 110\ kV}{\sqrt{3} \cdot (4.84\ \Omega + 27.66\ \Omega)} = 2150\ A$$

[formel-ueberstromzeit-hochstrom-2-oz-010802, 1, en_GB]

With a safety factor of 10%, the following primary setting value is calculated:

Setting value I>> = 1.1 · 2150 A = 2365 A

or the secondary setting value:

$$\text{Setting value I>>} = 1.1 \cdot \frac{2150\ \text{A}}{600\ \text{A}} \cdot 5\ \text{A} = 19.7\ \text{A}$$

[formel-ueberstromzeit-hochstrom-3-oz-010802, 1, en_GB]

If short-circuit currents exceed 2365 A (primary) or 19.7 A (secondary), there is a short circuit on the line to be protected. This fault can immediately be cleared by the time overcurrent protection.

Note: the calculation was carried out with absolute values, which is sufficiently precise for overhead lines. If the angles of the source impedance and the line impedance vary considerably, a complex calculation must be carried out.

A similar calculation must be carried out for earth faults, with the maximum earth current occurring at the line end during a short-circuit being decisive.

The set time delays are pure additional delays, which do not include the operating time (measuring time).

The parameter **I>> InstTrip BI** (address 2614) determines, whether the time delays *>O/C InstTRIP* (No 7110) or the automatic reclosure in ready state can be bypassed by the binary input **T Iph>>** (address 2611) and **T 3I0>>** (address2613) is possible. The binary input (if allocated) is applied to all stages of the time-overcurrent protection. With **I>> InstTrip BI** = ***YES*** you define that the I>> stages trip without delay after pickup if the binary input was activated. For **I>> InstTrip BI** = ***NO*** the set delays are always active

If the I>>-stage, when switching the line onto a fault, is to trip without delay or with a short delay, **SOTF Time DELAY** (address 2680, see above under margin heading “General”) set the parameter **I>> SOTF** (address 2615) to ***YES***. Any other stage can be selected as well for this instantaneous tripping.

Overcurrent Stages Iph>, 3I0> in Definite-time Overcurrent Protection

For the setting of the current pickup value, **Iph>** (address 2620), the maximum operating current is most decisive. Pickup due to overload should never occur, since the device in this operating mode operates as fault protection with correspondingly short tripping times and not as overload protection. For this reason, a pickup value of about 10 % above the expected peak load is recommended for line protection, and a setting of about 20 % above the expected peak load is recommended for transformers and motors.

When using a personal computer and DIGSI to apply the settings, these can be optionally entered as primary or secondary values. For settings with secondary values the currents will be converted for the secondary side of the current transformers.

Calculation Example:

110 kV overhead line 150 mm^2

maximum transmittable power

P_{max}	= 120 MVA

corresponding to

I_{max}	= 630 A
Current Transformer	600 A/5 A
Safety factor	1.1

With settings in primary quantities the following setting value is calculated:

Set value I> = 1.1 · 630 A = 693 A

With settings in secondary quantities the following setting value is calculated:

$$\text{Setting value I>} = 1.1 \cdot \frac{630\ \text{A}}{600\ \text{A}} \cdot 5\ \text{A} = 5.8\ \text{A}$$

[formel-ueberstromzeit-ueberstrom-oz-310702, 1, en_GB]

The earth current stage **3I0>** (address 2622), should be set to detect the smallest earth fault current to be expected.

The settable time delay **T Iph>** (address 2621) results from the grading coordination chart defined for the system.

The time **T 3I0>** (address 2623) can normally be set shorter, according to a separate time grading schedule for earth currents.

The set times are mere additional delays for the independent stages, which do not include the inherent operating time of the protection. If only the phase currents are to be monitored, set the pickup value of the earth fault stage to ∞.

The parameter **I> Telep/BI** (address 2624) defines whether the time delays **T Iph>** (address 2621) and **T 3I0>** (address 2623) can be bypassed by the binary input *>O/C InstTRIP*. The binary input (if allocated) is applied to all stages of the time-overcurrent protection. With **I> Telep/BI** = ***YES*** you define that the I> stages trip without delay after pickup if the binary input was activated. For **I> Telep/BI** = ***NO*** the set delays are always active.

If the I> stage, when switching the line onto a fault, is to retrip without delay or with a short delay **SOTF Time DELAY** (address 2680, see above under side title "General"), set parameter **I> SOTF** (address 2625) to ***YES***. We recommend, however, not to choose the sensitive setting for the fast tripping as switching onto a fault typically causes a solid short circuit. It is important to avoid that the selected stage picks up due to transients during line energization.

Overcurrent Stages Ip, 3I0p for Inverse-time Overcurrent Protection with IEC Characteristics

In the case of the inverse time overcurrent stages, various characteristics can be selected, depending on the ordering version of the device and the configuration (address 126). With IEC characteristics (address 126 **Back-Up O/C** = ***TOC IEC***) the following options are available in address 2660 **IEC Curve**:

Normal Inverse (inverse, type A according to IEC 60255-3),

Very Inverse (very inverse, type B according to IEC 60255-3),

Extremely Inv. (extremely inverse, type C according to IEC 60255-3) and

LongTimeInverse (longtime, type B according to IEC 60255-3).

The characteristics and equations they are based on are listed in the „Technical Data".

For the setting of the current thresholds **Ip>** (address 2640) and **3I0p PICKUP** (address 2650) the same considerations as for the overcurrent stages of the definite time protection (see above) apply. In this case, it must be noted that a safety margin between the pickup threshold and the set value has already been incorporated. Pickup only occurs at a current which is approximately 10 % above the set value.

The above example shows that the maximum expected operating current may directly be applied as setting here.

Primary: Set value IP = 630 A,

Secondary: Set value IP = 5.25 A, d.h. (630 A/600 A) · 5 A.

The time multiplier to be set **T Ip Time Dial** (address 2642) results from the grading coordination chart created for the system.

The time multiplier setting **T 3I0p TimeDial** (address 2652) can usually be set smaller according to a separate earth fault grading plan. If only the phase currents are to be monitored, set the pickup value of the earth fault stage to ∞.

In addition to the current-dependent delays, a time fixed delay can be set, if necessary. The settings **T Ip Add** (address 2646 for phase currents) and **T 3I0p Add** (address 2656 for earth currents) are in addition to the time delays resulting from the set curves.

The parameter **I(3I0)p Tele/BI** (address 2670) defines whether the time delays **T Ip Time Dial** (address 2642), including the additional delay **T Ip Add** (address 2646), and **T 3I0p TimeDial** (address 2652), including the additional delay **T 3I0p Add** (address 2656), can be bypassed by the binary input *>O/C InstTRIP* (No. 7110). The binary input (if allocated) is applied to all stages of the time-overcurrent protection. With **I(3I0)p Tele/BI** = ***YES*** you define that the IP stages trip without delay after pickup if the binary input was activated. For **I(3I0)p Tele/BI** = ***NO*** the set delays are always active.

If the IP stage, when switching the line onto a fault, is to retrip without delay or with a short delay **SOTF Time DELAY** (address 2680, see above under side title "General"), set parameter **I(3I0)p SOTF** (address 2671) to ***YES***. We recommend, however, not to choose the sensitive setting for the fast tripping as switching onto a fault typically causes a solid short circuit. It is important to avoid that the selected stage picks up due to transients during line energization.

Overcurrent Stages Ip, 3I0p for inverse-time O/C protection with ANSI characteristic

In the case of the inverse time overcurrent stages, various characteristics can be selected, depending on the ordering version of the device and the configuration (address 126). With ANSI characteristics (address 126 **Back-Up O/C** = ***TOC ANSI***) the following options are available in address 2661 **ANSI Curve**:

Inverse,

Short Inverse,

Long Inverse,

Moderately Inv.,

Very Inverse,

Extremely Inv. and

Definite Inv..

For the setting of the current thresholds **Ip>** (address 2640) and **3I0p PICKUP** (address 2650) the same considerations as for the overcurrent stages of the definite time protection (see above) apply. In this case, it must be noted that a safety margin between the pickup threshold and the set value has already been incorporated. Pickup only occurs at a current which is approximately 10 % above the set value.

For the setting of the current thresholds **Ip>** (address 2640) and **3I0p PICKUP** (address 2650), the same considerations as for the overcurrent stages of the definite time protection (see above) apply. In this case, it must be noted that a safety margin between the pickup threshold and the set value has already been incorporated. Pickup only occurs at a current which is approximately 10°% above the set value.

The above example shows that the maximum expected operating current may directly be applied as setting here.

Primary: Set value IP = 630 A,

Secondary: Setting value IP = 5.25 A, d.h. (630 A/600 A) · 5 A.

The time multiplier to be set **Time Dial TD Ip** (address 2643) results from the grading coordination chart created for the system.

The time multiplier setting **TimeDial TD3I0p** (address 2653) can usually be set smaller according to a separate earth fault grading plan. If only the phase currents are to be monitored, set the pickup value of the earth fault stage to ∞.

In addition to the inverse-time delays, a delay of constant length can be set, if necessary. The settings **T Ip Add** (address 2646 for phase currents) and **T 3I0p Add** (address 2656 for ground current) are added to the times of the set characteristic curves.

The parameter **I(3I0)p Tele/BI** (address 2670) defines whether the time delays **Time Dial TD Ip** (address 2643), including the additional delay **T Ip Add** (address 2646), and **TimeDial TD3I0p** (address 2653), including the additional delay **T 3I0p Add** (address 2656), can be bypassed by the binary input *>O/C InstTRIP* (No. 7110). The binary input (if allocated) is applied to all stages of the time-overcurrent protection. With **I(3I0)p Tele/BI** = ***YES*** you define that the IP stages trip without delay after pickup if the binary input was activated. For **I(3I0)p Tele/BI** = ***NO*** the set delays are always active.

If the IP stage, when switching the line onto a fault, is to retrip without delay or with a short delay **SOTF Time DELAY** (address 2680, see above under side title "General"), set parameter **I(3I0)p SOTF** (address 2671) to ***YES***. We recommend, however, not to choose the sensitive setting for the fast tripping as switching onto a fault typically causes a solid short circuit. It is important to avoid that the selected stage picks up due to transients during line energization.

Additional stage Iph>>>

When using the I>>> stage as stub fault protection, the pickup values **Iph> STUB** (address 2630) and **3I0> STUB** (address 2632) are usually not critical since the protection function is only activated when the line isolator is open, which implies that each measured current should be a fault current. With a $1^1/_2$ circuit breaker arrangement, however, it is possible that high short circuit currents flow from busbar A to busbar B or to feeder 2 via the current transformers. These currents could cause different transformation errors in the two current transformer sets $\underline{I}_A$ and $\underline{I}_B$, especially in the saturation range. The protection should therefore not be set unnecessarily sensitive. If the minimum short circuit currents on the busbars are known, the pickup value **Iph> STUB** is set somewhat (approx. 10 %) below the minimum two-phase short-circuit current, **3I0> STUB**

is set below the minimum single-phase current. If only the phase currents are to be monitored, set the pickup value of the residual current stage to ∞ .

The times **T Iph STUB** (address 2631) and **T 3I0 STUB** (address 2633) are set to **0** s for this application, so that the protection triggers with open isolator.

If this stage is applied differently, similar considerations as for the other overcurrent stages apply.

The parameter **I-STUB Telep/BI** (address 2634) determines, whether the time delays *>O/C InstTRIP* can be bypassed by the binary input **T Iph STUB** (address 2631) and **T 3I0 STUB** (address 2633) is possible. The binary input (if allocated) is applied to all stages of the time-overcurrent protection. With **I-STUB Telep/BI** = ***YES*** you determine that the I>>>-stages trip without delay after pickup if the binary input was activated. For **I-STUB Telep/BI** = ***NO*** the set delays are always active

If the I>>>-stage, when switching the line onto a fault, is to trip without delay or with a short delay, **SOTF Time DELAY** (address 2680, see above under margin heading "General") set the parameter **I-STUB SOTF** (address 2635) to ***YES***. When used as stub fault protection, select the setting ***NO*** since the effect of this protection function solely depends on the position of the isolator.

2.3.4 Settings

The table indicates region-specific presettings. Column C (configuration) indicates the corresponding secondary nominal current of the current transformer.

Addr.	Parameter	C	Setting Options	Default Setting	Comments
2601	Operating Mode		ON OFF	ON	Operating mode
2610	Iph>>	1A	0.05 .. 50.00 A	2.00 A	Iph>> Pickup
		5A	0.25 .. 250.00 A	10.00 A	
2611	T Iph>>		0.00 .. 30.00 sec	0.30 sec	T Iph>> Time delay
2612	3I0>> PICKUP	1A	0.05 .. 25.00 A	0.50 A	3I0>> Pickup
		5A	0.25 .. 125.00 A	2.50 A	
2613	T 3I0>>		0.00 .. 30.00 sec	2.00 sec	T 3I0>> Time delay
2614	I>> InstTrip BI		NO YES	YES	Instantaneous trip via BI
2615	I>> SOTF		NO YES	NO	Instantaneous trip after SwitchOnToFault
2620	Iph>	1A	0.05 .. 50.00 A	1.50 A	Iph> Pickup
		5A	0.25 .. 250.00 A	7.50 A	
2621	T Iph>		0.00 .. 30.00 sec	0.50 sec	T Iph> Time delay
2622	3I0>	1A	0.05 .. 25.00 A	0.20 A	3I0> Pickup
		5A	0.25 .. 125.00 A	1.00 A	
2623	T 3I0>		0.00 .. 30.00 sec	2.00 sec	T 3I0> Time delay
2624	I> Telep/BI		NO YES	NO	Instantaneous trip via Teleprot./BI
2625	I> SOTF		NO YES	NO	Instantaneous trip after SwitchOnToFault
2630	Iph> STUB	1A	0.05 .. 50.00 A	1.50 A	Iph> STUB Pickup
		5A	0.25 .. 250.00 A	7.50 A	
2631	T Iph STUB		0.00 .. 30.00 sec	0.30 sec	T Iph STUB Time delay
2632	3I0> STUB	1A	0.05 .. 25.00 A	0.20 A	3I0> STUB Pickup
		5A	0.25 .. 125.00 A	1.00 A	
2633	T 3I0 STUB		0.00 .. 30.00 sec	2.00 sec	T 3I0 STUB Time delay

Addr.	Parameter	C	Setting Options	Default Setting	Comments
2634	I-STUB Telep/BI		NO YES	NO	Instantaneous trip via Tele-prot./BI
2635	I-STUB SOTF		NO YES	NO	Instantaneous trip after SwitchOnToFault
2640	Ip>	1A	0.10 .. 4.00 A	2147483647 A	Ip> Pickup
		5A	0.50 .. 20.00 A	2147483647 A	
2642	T Ip Time Dial		0.05 .. 3.00 sec	0.50 sec	T Ip Time Dial
2643	Time Dial TD Ip		0.50 .. 15.00	5.00	Time Dial TD Ip
2646	T Ip Add		0.00 .. 30.00 sec	0.00 sec	T Ip Additional Time Delay
2650	3I0p PICKUP	1A	0.05 .. 4.00 A	2147483647 A	3I0p Pickup
		5A	0.25 .. 20.00 A	2147483647 A	
2652	T 3I0p TimeDial		0.05 .. 3.00 sec	0.50 sec	T 3I0p Time Dial
2653	TimeDial TD3I0p		0.50 .. 15.00	5.00	Time Dial TD 3I0p
2656	T 3I0p Add		0.00 .. 30.00 sec	0.00 sec	T 3I0p Additional Time Delay
2660	IEC Curve		Normal Inverse Very Inverse Extremely Inv. LongTimeInverse	Normal Inverse	IEC Curve
2661	ANSI Curve		Inverse Short Inverse Long Inverse Moderately Inv. Very Inverse Extremely Inv. Definite Inv.	Inverse	ANSI Curve
2670	I(3I0)p Tele/BI		NO YES	NO	Instantaneous trip via Tele-prot./BI
2671	I(3I0)p SOTF		NO YES	NO	Instantaneous trip after SwitchOnToFault
2680	SOTF Time DELAY		0.00 .. 30.00 sec	0.00 sec	Trip time delay after SOTF

2.3.5 Information List

No.	Information	Type of Informa-tion	Comments
7104	>BLOCK O/C I>>	SP	>BLOCK Backup OverCurrent I>>
7105	>BLOCK O/C I>	SP	>BLOCK Backup OverCurrent I>
7106	>BLOCK O/C Ip	SP	>BLOCK Backup OverCurrent Ip
7110	>O/C InstTRIP	SP	>Backup OverCurrent InstantaneousTrip
7130	>BLOCK I-STUB	SP	>BLOCK I-STUB
7131	>I-STUB ENABLE	SP	>Enable I-STUB-Bus function
7151	O/C OFF	OUT	Backup O/C is switched OFF
7152	O/C BLOCK	OUT	Backup O/C is BLOCKED
7153	O/C ACTIVE	OUT	Backup O/C is ACTIVE
7161	O/C PICKUP	OUT	Backup O/C PICKED UP
7162	O/C Pickup L1	OUT	Backup O/C PICKUP L1

No.	Information	Type of Information	Comments
7163	O/C Pickup L2	OUT	Backup O/C PICKUP L2
7164	O/C Pickup L3	OUT	Backup O/C PICKUP L3
7165	O/C Pickup E	OUT	Backup O/C PICKUP EARTH
7171	O/C PU only E	OUT	Backup O/C Pickup - Only EARTH
7172	O/C PU 1p. L1	OUT	Backup O/C Pickup - Only L1
7173	O/C Pickup L1E	OUT	Backup O/C Pickup L1E
7174	O/C PU 1p. L2	OUT	Backup O/C Pickup - Only L2
7175	O/C Pickup L2E	OUT	Backup O/C Pickup L2E
7176	O/C Pickup L12	OUT	Backup O/C Pickup L12
7177	O/C Pickup L12E	OUT	Backup O/C Pickup L12E
7178	O/C PU 1p. L3	OUT	Backup O/C Pickup - Only L3
7179	O/C Pickup L3E	OUT	Backup O/C Pickup L3E
7180	O/C Pickup L31	OUT	Backup O/C Pickup L31
7181	O/C Pickup L31E	OUT	Backup O/C Pickup L31E
7182	O/C Pickup L23	OUT	Backup O/C Pickup L23
7183	O/C Pickup L23E	OUT	Backup O/C Pickup L23E
7184	O/C Pickup L123	OUT	Backup O/C Pickup L123
7185	O/C PickupL123E	OUT	Backup O/C Pickup L123E
7191	O/C PICKUP I>>	OUT	Backup O/C Pickup I>>
7192	O/C PICKUP I>	OUT	Backup O/C Pickup I>
7193	O/C PICKUP Ip	OUT	Backup O/C Pickup Ip
7201	I-STUB PICKUP	OUT	O/C I-STUB Pickup
7211	O/C TRIP	OUT	Backup O/C General TRIP command
7212	O/C TRIP 1p.L1	OUT	Backup O/C TRIP - Only L1
7213	O/C TRIP 1p.L2	OUT	Backup O/C TRIP - Only L2
7214	O/C TRIP 1p.L3	OUT	Backup O/C TRIP - Only L3
7215	O/C TRIP L123	OUT	Backup O/C TRIP Phases L123
7221	O/C TRIP I>>	OUT	Backup O/C TRIP I>>
7222	O/C TRIP I>	OUT	Backup O/C TRIP I>
7223	O/C TRIP Ip	OUT	Backup O/C TRIP Ip
7235	I-STUB TRIP	OUT	O/C I-STUB TRIP

2.4 Synchronism and voltage check (optional)

The synchronism and voltage check function ensures, when switching a line onto a busbar, that the stability of the network is not endangered. The voltage of the feeder to be energized is compared to that of the busbar to check conformances in terms of magnitude, phase angle and frequency within certain tolerances. Optionally, deenergization of the feeder can be checked before it is connected to an energized busbar (or vice versa).

The synchronism check can either be conducted only for automatic reclosure, only for manual closure (this includes also closing via control command) or in both cases. Different close permission (release) criteria can also be programmed for automatic and manual closure.

Synchro check is also possible without external matching transformers if a power transformer is located between the measuring points.

Closing is released for synchronous or asynchronous system conditions. In the latter case, the device determines the time for issuing the close command such that the voltages are identical the instant the breaker poles make contact.

2.4.1 Functional Description

General

For comparing the two voltages, the synchro check uses the voltages U_{sy1} and U_{sy2}. If the voltage transformers for the protection functions (U_{sy1}) are connected to the feeder side, U_{sy2} has to be connected to a busbar voltage. If, however, the voltage transformers for the protection functions U_{sy1} are connected to the busbar side, the U_{sy2} has to be connected to a feeder voltage.

U_{sy2} can be any phase-to-earth or phase-to-phase voltage (see Section *2.1.3.1 Setting Notes* margin heading "Voltage Connection").

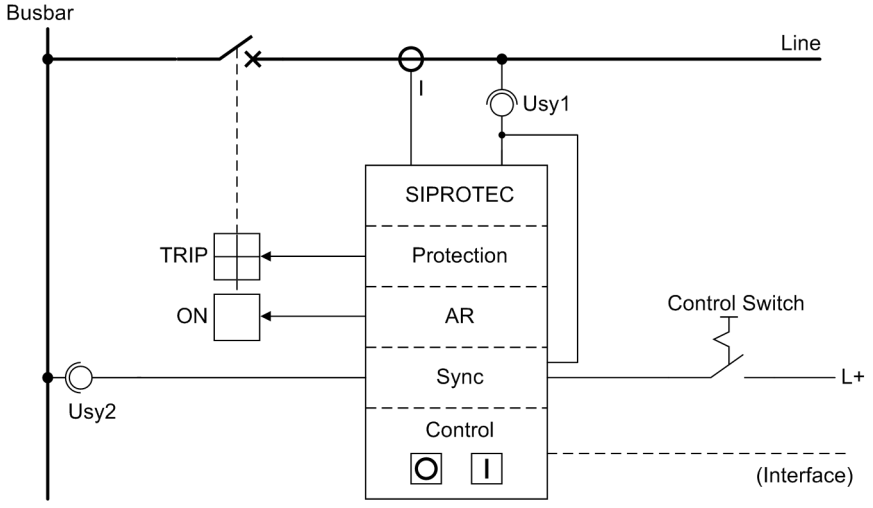

[synchronkontr-einschalten-wlk-310702, 1, en_GB]

Figure 2-20 Synchronism check on closing - example

If a power transformer is located between the feeder voltage transformers and the busbar voltage transformers (*Figure 2-21*), its vector group can be compensated for by the 7VK61 relay, so that no external matching transformers are necessary.

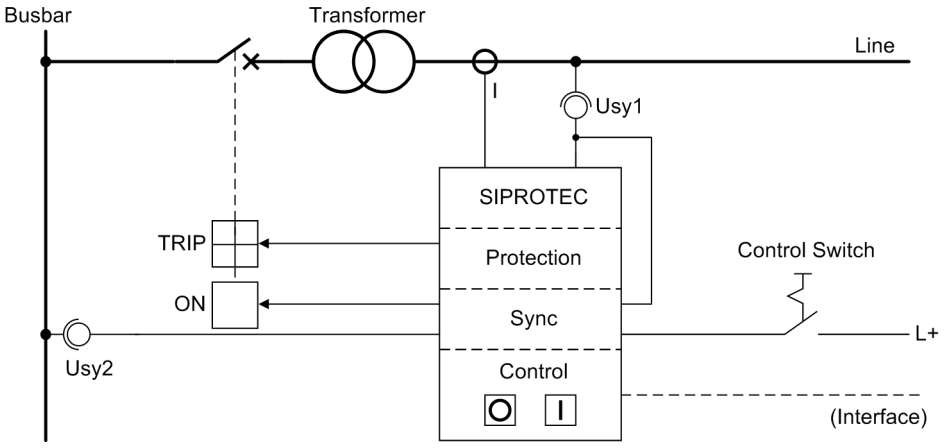

[synchronkontr-trafo-wlk-310702, 1, en_GB]

Figure 2-21 Synchronism check across a transformer - example

The synchronism check function in the 7VK61 usually operates in conjunction with the integrated automatic reclose, manual close, and the control functions of the relay. It is also possible to employ an external automatic reclosing system. In such a case signal exchange between the devices is accomplished via binary inputs and outputs (see *Figure 2-22*).

When closing via the integrated control function, the configured interlocking conditions may have to be verified before checking the conditions for synchronism. After the synchronism check grants the release, the interlocking conditions are not checked a second time.

Furthermore, switching is possible under synchronous or asynchronous system conditions or both.

Synchronous switching means that the closing command is issued as soon as the following critical values lie within the set tolerances:

- Voltage magnitude difference **`AR maxVolt.Diff`** (address 3511) or **`MC maxVolt.Diff`** (address 3531)
- Angle difference **`AR maxAngleDiff`** (address 3513) or **`MC maxAngleDiff`** (Adresse 3533)
- Frequency difference **`AR maxFreq.Diff`** (address 3512) or **`MC maxFreq.Diff`** (address 3532)

For switching under asynchronous system conditions, the device determines the time for issuing the ON command from the current angle and frequency difference such that the angle difference of the voltages (between busbar and feeder) is almost 0° at the instant the poles make contact. For this purpose, the device requires the parameter (address 239 **`T-CB close`**) with the set circuit breaker closing time. Different frequency limit thresholds apply to switching under synchronous and asynchronous conditions. If closing is permitted exclusively under synchronous system conditions, the frequency difference limit for this condition can be set. If closing is permitted under synchronous as well as under asynchronous system conditions, a frequency difference below 0.01 Hz is treated as a synchronous condition, a higher frequency difference value can then be set for closing under asynchronous system conditions.

The synchro check function only operates when it is requested to do so. Various possibilities exist for this purpose:

- Measuring request from the internal automatic reclosure device. If the internal automatic reclosing function is set accordingly (one or more reclosing attempts set to synchronism check, see also Section *2.2.2 Setting Notes*), the measuring request is accomplished internally. The release conditions for automatic reclosing apply (parameter AR...).
- Request to execute a check synchronism measurement from an external automatic reclosure device. The measuring request must be activated via the binary input *`>Sync. Start AR`* (No. 2906). The release conditions for automatic reclosing apply (parameter AR...).
- Measuring request from the manual CLOSE detection. The manual CLOSE detection of the central function control (Section *2.8.1 Function Control*) issues a measuring request provided that this was configured in the power system data 2 (address 1151). This requires that the device is informed of the manual closing via binary input *`>Manual Close`* (No. 356). The release conditions for manual closure apply (parameter MC...).

- Request to execute a check synchronism measurement from an external closing command. Binary input *>Sync. Start MC* (No. 2905) fulfills this purpose. Unlike *>Manual Close* (see previous paragraph), this merely affects the measuring request to the synchronism check function, but not other integrated manual CLOSE functions such as instantaneous tripping when switching onto a fault (e.g. accelerated tripping of a time overcurrent stage). The release conditions for manual closure apply (parameter MC...).
- Measuring request from the integrated control function via control keys or via the serial interface using DIGSI on a PC or from a control centre. The release conditions for manual closure apply (parameter MC...).

The synchronism-check function gives permission for passage *Sync. release* (No. 2951) of the closing command to the required function. Furthermore, a separate closing command is available as output indication *Sync.CloseCmd* (No. 2961).

The check of the release conditions is limited by an adjustable synchronous monitoring time **T-SYN. DURATION**. The configured conditions must be fulfilled within this time. If they are not, the synchronism will not be checked. A new synchronism check sequence requires a new request.

The device generates messages if, after a request to check synchronism, the conditions for release are not fulfilled, i.e. if the absolute voltage difference **AR maxVolt.Diff** or **MC maxVolt.Diff**, frequency difference **AR maxFreq.Diff** or **MC maxFreq.Diff** or angle difference **AR maxAngleDiff** or **MC maxAngleDiff** lie outside the permissible limit values. A precondition for these indications is that voltages within the operating range of the relay are available. When a closing command originates from the integrated control function and the conditions for synchronism are not fulfilled, the command is cancelled, i.e. the control function outputs “CO– ” (refer also to Section *2.10.1 Control Authorization*).

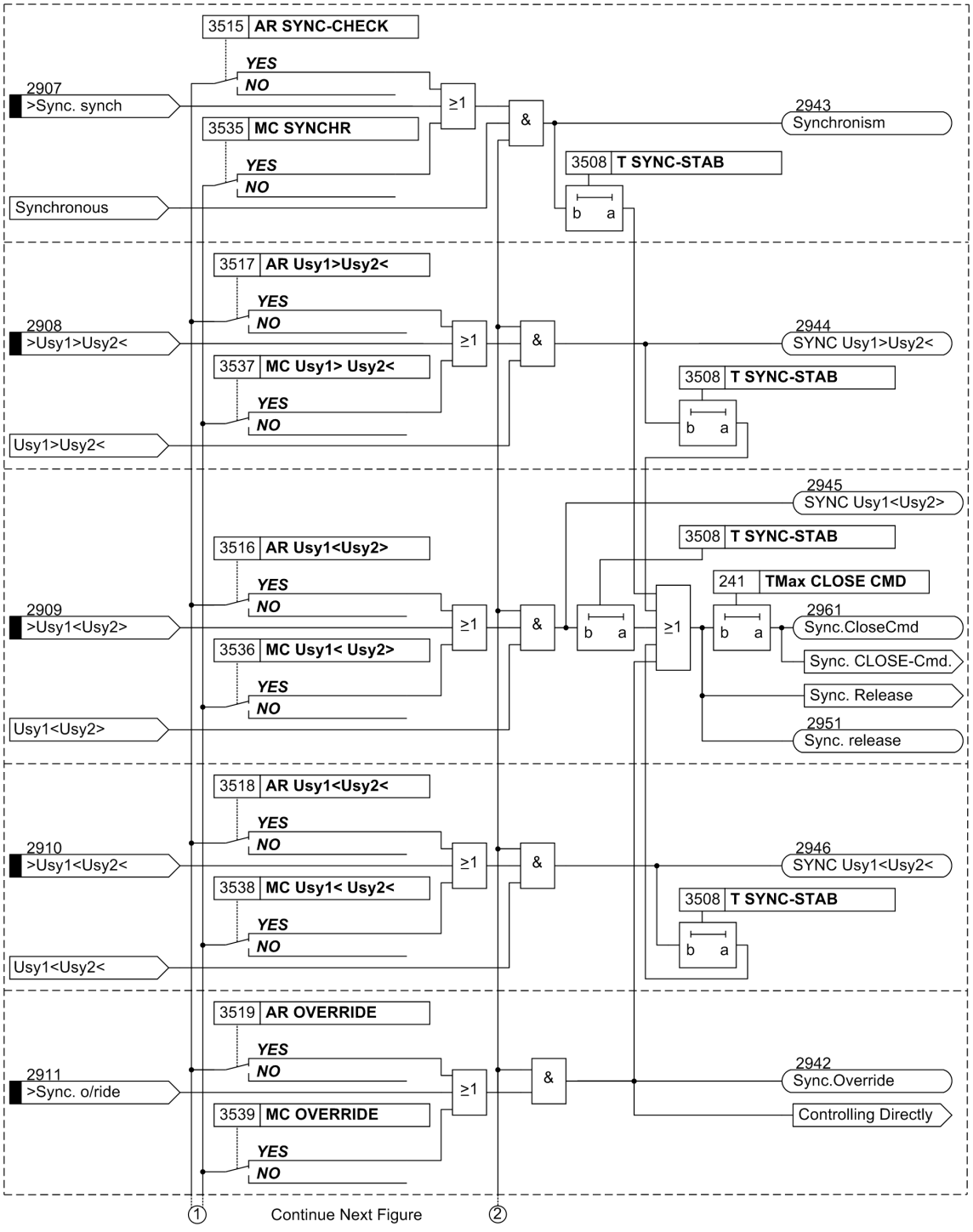

[logik-synchrocheck-seite1, 1, en_GB]

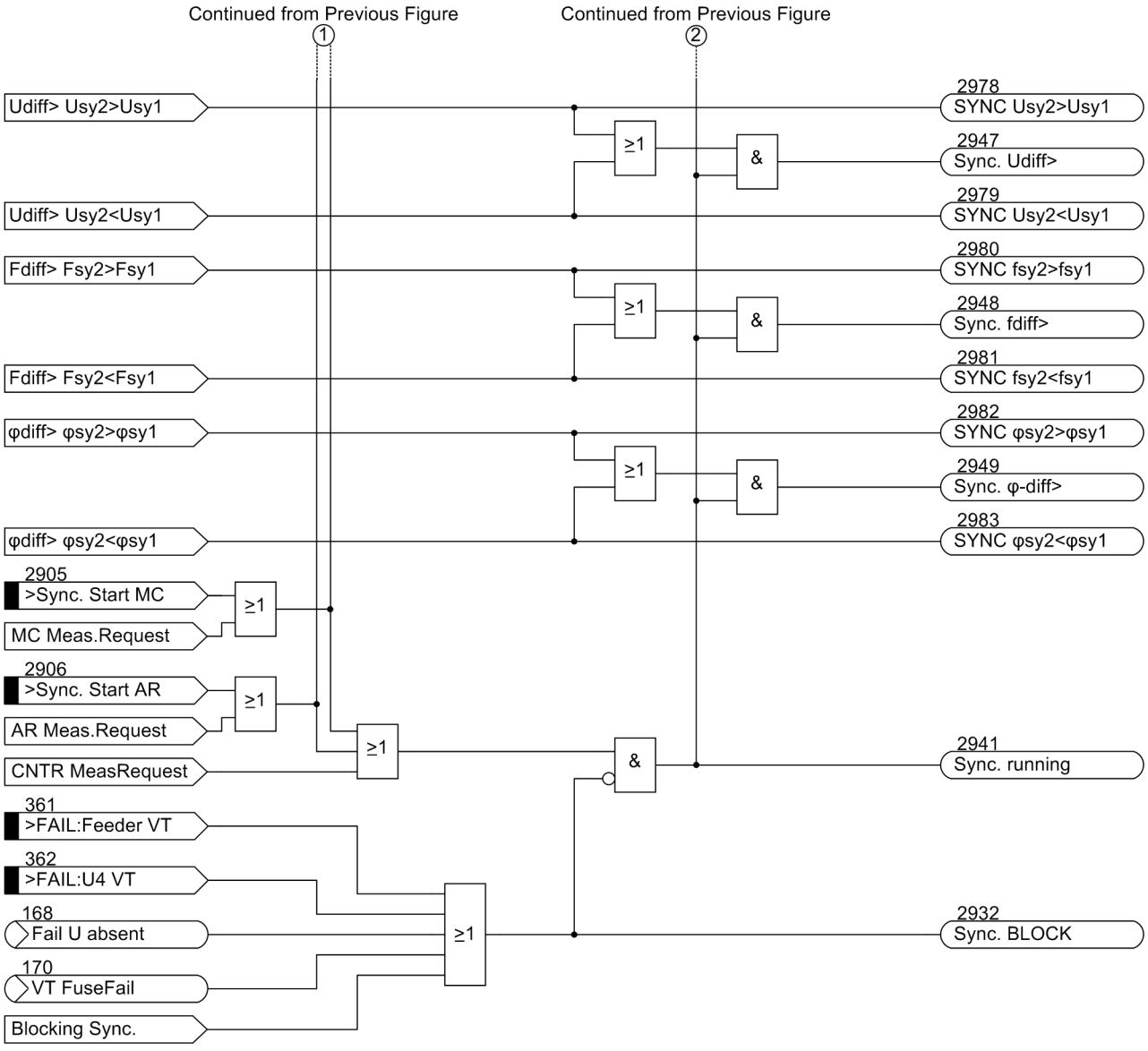

[logik-synchrocheck-seite2-280404-st, 1, en_GB]

Figure 2-22 Synchro check logic

Operating modes

The closing check for automatic reclosing is possible in one of the following operating modes:

AR SYNC-CHECK	Released at synchronism, that is when the critical values **AR maxVolt.Diff**, **AR maxFreq.Diff**, **AR maxAngleDiff** are within the set limits.
AR Usy1<Usy2>	Released if measuring point Usy1< is de-energized and the measuring point Usy2> is energized.
AR Usy1>Usy2<	Released if measuring point Usy1> is energized and the measuring point Usy2< is de-energized.
AR Usy1<Usy2<	Released if measuring point Usy1< is de-energized and the measuring point Usy2< is also de-energized.
AR OVERRIDE	Released without any check.

The closing check for manual reclosing is possible in one of the following operating modes:

MC SYNCHR	Released at synchronism, that is when the critical values **MC maxVolt.Diff**, **MC maxFreq.Diff**, **MC maxAngleDiff** are within the set limits.
MC Usy1< Usy2>	Released if measuring point Usy1< is de-energized and the measuring point Usy2> is energized.
MC Usy1> Usy2<	Released if measuring point Usy1> is energized and the measuring point Usy2< is de-energized.
MC Usy1< Usy2<	Released if measuring point Usy1< is de-energized and the measuring point Usy2< is also de-energized.
MC OVERRIDE	Released without any check.

Each of these conditions can be enabled or disabled individually; combinations are also possible, e.g. release if **AR Usy1<Usy2>** or **AR Usy1>Usy2<** are fulfilled). Combination of **AR OVERRIDE** with other parameters is, of course, not reasonable (see also *Figure 2-22*).

The release conditions can be configured individually for automatic reclosing or for manual closing or for closing via control commands. For example, manual closing and closing via control command can be allowed in cases of synchronism or dead line, while, before an automatic reclose attempt dead line conditions are only checked at one line end and after the automatic reclose attempt only synchronism at the other end.

Non-energized switching

To release the closing command to couple a dead overhead line to a live busbar, the following conditions are checked:

- Is the feeder voltage below the set value **Dead Volt. Thr.**?
- Is the busbar voltage above the setting value **Live Volt. Thr.**, but below the maximum voltage **Umax**?
- Is the frequency within the permitted operating range $f_N \pm 3$ Hz?

After successful check the closing command is released.

Corresponding conditions apply when switching a live line onto a dead busbar or a dead line onto a dead busbar.

Closing under synchronous system conditions

Before releasing a closing command under synchronous conditions, the following conditions are checked:

- Is the busbar voltage above the setting value **Live Volt. Thr.**, but below the maximum voltage **Umax**?
- Is the feeder voltage above the setting value **Live Volt. Thr.** but below the maximum voltage **Umax**?
- Is the voltage difference $|U_{sy1} - U_{sy2}|$ within the permissible tolerance **AR maxVolt.Diff** or **MC maxVolt.Diff**?
- Are the two frequencies f_{sy1} and f_{sy2} within the permitted operating range $f_N \pm 3$ Hz?
- Does the frequency difference $|f_{sy1} - f_{sy2}|$ lie within the permissible tolerance **AR maxFreq.Diff** or **MC maxFreq.Diff**?
- Is the angle difference $|\varphi_{sy1} - \varphi_{sy2}|$ within the permissible tolerance **AR maxAngleDiff** or **MC maxAngleDiff**?

To check whether these conditions are fulfilled for a certain minimum time, you can set this minimum time as **T SYNC-STAB** Checking the synchronism conditions can also be confined to the a maximum monitoring time **T-SYN. DURATION**. This implies that the conditions must be fulfilled within the time **T-SYN. DURATION** for the duration of **T SYNC-STAB**. If this is the case, the closing release is granted.

Closing under asynchronous system conditions

Before releasing a closing command under asynchronous conditions, the following conditions are checked:

- Is the busbar voltage above the setting value **Live Volt. Thr.**, but below the maximum voltage **Umax**?
- Is the feeder voltage above the setting value **Live Volt. Thr.** but below the maximum voltage **Umax**?
- Is the voltage difference $|U_{sy1} - U_{sy2}|$within the permissible tolerance **AR maxVolt.Diff** or **MC maxVolt.Diff**?
- Are the two frequencies f_{sy1} and f_{sy2}within the permitted operating range $f_N \pm 3$ Hz?
- Is the frequency difference $|f_{sy1} - f_{sy2}|$ within the permissible tolerance **AR maxFreq.Diff** or **MC maxFreq.Diff**?

When the check has been terminated successfully, the device determines the next synchronizing time from the angle difference and the frequency difference. The close command is issued at synchronization time minus the operating time of the circuit breaker.

Measured values

The measured values of the synchronism check are displayed in separate boxes for primary and secondary measured values and percentages.

The following is displayed:

- Value of reference voltage U_{sy1}
- Value of the voltage to be synchronized U_{sy2}
- Frequency values f_{sy1} and f_{sy2}
- Differences of voltage, frequency and angle between U_{sy1} and U_{sys2}.

The primary measured values of the synchronism check are summarized in one of the preset default displays (see Appendix *D Default Settings and Protocol-dependent Functions*).

2.4.2 Setting Notes

Preconditions

When setting the general power system data a number of parameters regarding the measured quantities and the operating mode of the synchronism check function must be applied.

This concerns the following parameters:

203 **Unom PRIMARY**	primary rated voltage of the voltage transformers of the protection functions (phase-to-phase) in kV, measuring point U_{sy1};
204 **Unom SECONDARY**	secondary rated voltage of the protection functions (phase-to-phase) in V, measuring point U_{sy1};
210 **U4 transformer**	voltage measurement input U_4 must be set to ***Usy2 transf.***;
212 **Usy2 connection**	voltage connection of measuring point U_{sy2} (e.g. U_{L1-L2}),
214 **φ Usy2-Usy1**	phase displacement between the voltages U_{sy2} and U_{sy1} if a transformer is switched in between;
215 **Usy1/Usy2 ratio**	ratio between the secondary voltage U_{sy1} and voltage U_{sy2} under nominal condition;

230 **Rated Frequency**	the operating range of the synchronism check refers to the nominal frequency of the power system (f_N±3 Hz);
1103 **FullScaleVolt.**	nominal operational voltage of the primary power system (phase-phase) in kV;

and, if switching under asynchronous system conditions is allowed,

239 **T-CB close**	the closing time of the circuit breaker.



WARNING

Switching under Asynchronous System Conditions!

Closing under asynchronous system conditions requires the closing time of the circuit breaker to be set correctly in the Power System Data 1 (address 239).

✧ Otherwise, faulty synchronization may occur.

General

The synchronism check can only operate if during the configuration of the device scope (address 135) it has been set to ***Enabled*** and the parameter **U4 transformer** (address 210) to ***Usy2 transf.***.

The measured values of the synchronism check (636 *Udiff =*, 637 *Usy1=*, 638 *Usy2=*, 647 *F-diff=*, 649 *F-sy1 =*, 646 *F-sy2 =* and 648 *ϕdif=*) are only available if the synchronism check is in service.

Different interrogation conditions can be parameterized for automatic reclosure on the one hand and for manual closure on the other hand. Each closing command is considered a manual reclosure if it was initiated via the integrated control function or via a serial interface.

The general limit values for synchronism check are set at address 3501 to 3508. Additionally, addresses 3510 to 3519 are relevant for automatic reclosure, addresses 3530 to 3539 are relevant for manual closure. Moreover, address 3509 is relevant for closure via the integrated control function.

At address 3501 **FCT Synchronism** you switch the entire synchronism check function ***ON***- or ***OFF***. If switched off, the synchronism check does not verify the synchronization conditions and it finds keine Freigabe. You can also set ***ON:w/o CloseCmd***: The CLOSE command is in this case not included in the common device alarm *Relay CLOSE* (No 510); but the alarm *Sync.CloseCmd* (No 2961) is issued.

Address 3502 **Dead Volt. Thr.** indicates the voltage threshold below which the feeder or the busbar can safely be considered de-energized (for checking a de-energized feeder or busbar). The setting is applied in Volts secondary. This value can be entered as a primary value when parameterising with a PC and DIGSI. Depending on the VT connection these are phase-to-earth voltages or phase-to-phase voltages.

Address 3503 **Live Volt. Thr.** indicates the voltage above which the feeder or busbar is regarded as being definitely energized (for energized line or busbar check and for the lower limit of synchronism check). It must be set below the minimum operational undervoltage to be expected. The setting is applied in Volts secondary. This value can be entered as a primary value when parameterising with a PC and DIGSI. Depending on the VT connection these are phase-to-earth voltages or phase-to-phase voltages.

The maximum permissible voltage for the operating range of the synchronism check function is set in address 3504 **Umax**. The setting is applied in Volts secondary. This value can be entered as a primary value when parameterising with a PC and DIGSI. Depending on the VT connection these are phase-to-earth voltages or phase-to-phase voltages.

Verification of the release conditions via synchronism check can be limited to a configurable synchronous monitoring time **T-SYN. DURATION** (address 3507). The configured conditions must be fulfilled within this time. If not, closure will not be released. If this time is set to ∞ , the conditions will be checked until they are fulfilled or the measurement request is cancelled.

For switching under synchronous conditions you can specify a delay time **T SYNC-STAB** (address 3508). During this time the voltage criteria must at least be fulfilled before closing is released.

Synchronism conditions for automatic reclosure

Addresses 3510 to 3519 are relevant to the check conditions before automatic reclosure of the circuit breaker. When setting the parameters for the internal automatic reclosing function (Section *2.2.2 Setting Notes* it is decided with which automatic reclosing cycle synchronism and voltage check should be carried out.

Address 3510 **Op.mode with AR** determines whether closing under asynchronous system conditions is allowed for automatic reclosure. Set this parameter to ***with T-CB close*** to allow asynchronous closing; the relay will then consider the circuit breaker closing time before determining the correct instant for the close command. Remember that closing under asynchronous system conditions is allowed only if the circuit breaker closing time is set correctly (see above under "Preconditions")! If you wish to permit automatic reclosure only under synchronous system conditions, set this address to ***w/o T-CB close***.

The permissible difference between the voltages is set in address 3511 **AR maxVolt.Diff**. The setting is applied in Volts secondary. This value can be entered as a primary value when parameterising with a PC and DIGSI. Depending on the VT connection these are phase-to-earth voltages or phase-to-phase voltages.

The permissible frequency difference between the voltages is set at address 3512 **AR maxFreq.Diff**the permissible phase angle difference at address 3513 **AR maxAngleDiff**.

The further release conditions for automatic reclosing are set at addresses 3515 to 3519.

The following addresses mean:

3515 **AR SYNC-CHECK**	both measuring points U_{sy1} and U_{sy2} must be energized (**Live Volt. Thr.**, address 3503); the synchronism conditions are checked, i.e. **AR maxVolt.Diff** (address 3511), **AR maxFreq.Diff** (address 3512) and **AR maxAngleDiff** (address 3513). This parameter can only be altered in DIGSI at **Display Additional Settings**;
3516 **AR Usy1<Usy2>**	the measuring point U_{sy1} must be de-energized **Dead Volt. Thr.**, address 3502), the measuring point U_{sy2} must be energized (**Live Volt. Thr.**, address 3503) ;
3517 **AR Usy1>Usy2<**	the measuring point U_{sy1} must be energized (**Live Volt. Thr.**, address 3503), the measuring point U_{sy2} must be de-energized (**Dead Volt. Thr.**, address 3502);
3518 **AR Usy1<Usy2<**	both measuring points U_{sy1} and U_{sy2} must be de-energized (**Dead Volt. Thr.**, address 3502);
3519 **AR OVERRIDE**	automatic reclosure is released without any check.

The five possible release conditions are independent of one another and can be combined.

Synchronism conditions for manual closure and control command

Addresses 3530 to 3539 are relevant to the check conditions before manual closure and closing via control command of the circuit breaker. When setting the general protection data (Power System Data 2, Section *2.1.1.2 Setting Notes* it was already decided at address 1151 whether synchronism and voltage check should be carried out before manual closing. With the following setting in address **MAN. CLOSE** = ***w/o Sync-check***, no checks are performed before manual closing.

For commands through the integrated control (local, DIGSI, serial interface), address 3509 **SyncCB** determines whether synchronism checks will be performed or not. This address also informs the device to which switching device of the control the synchronizing request refers. You can select from the switching devices which are available for the integrated control. Choose the circuit breaker to be operated via the synchronism check. This is usually the circuit breaker which is operated in case of manual closing or automatic reclosure. If you set **SyncCB** = ***none*** here, a CLOSE command via the integrated control will be carried out without synchronism check.

Address 3530 **Op.mode with MC** determines whether closing under asynchronous system conditions is allowed for manual closing or reclosure via control command. Set this parameter to ***with T-CB close*** to

allow asynchronous closing; the relay will then consider the circuit breaker closing time before determining the correct instant for closing. Remember that closing under asynchronous system conditions is allowed only if the circuit breaker closing time is set correctly (see above under "Preconditions")! If you wish to permit manual closure or closing via control command only under synchronous system conditions, set this address to ***w/o T-CB close***.

The permissible difference between the voltages is set in address 3531 **MC maxVolt.Diff**. The setting is applied in Volts secondary. This value can be entered as a primary value when parameterising with a PC and DIGSI. Depending on the VT connection these are phase-to-earth voltages or phase-to-phase voltages.

The permissible frequency difference between the voltages is set at address 3532 **MC maxFreq.Diff**the permissible phase angle difference at address 3533 **MC maxAngleDiff**.

The further release conditions for manual reclosing or reclosure via control command are set under addresses 3535 to 3539.

The following addresses mean:

3535 **MC SYNCHR**	both measuring points U_{sy1} and U_{sy2} must be energized (**Live Volt. Thr.**, address 3503); the synchronism conditions are checked, i.e. **MC maxVolt.Diff** (address 3531), **MC maxFreq.Diff** (address 3532) and **MC maxAngleDiff** (address 3533). This parameter can only be altered in DIGSI at **Display Additional Settings**;
3536 **MC Usy1< Usy2>**	the measuring point U_{sy1} must be de-energized **Dead Volt. Thr.**, address 3502), the measuring point U_{sy2} must be energized (**Live Volt. Thr.**, address 3503) ;
3537 **MC Usy1> Usy2<**	the measuring point U_{sy1} must be energized (**Live Volt. Thr.**, address 3503), the measuring point U_{sy2} must be de-energized (**Dead Volt. Thr.**, address 3502);
3538 **MC Usy1< Usy2<**	both measuring points U_{sy1} and U_{sy2} must be de-energized (**Dead Volt. Thr.**, address 3502);
3539 **MC OVERRIDE**	manual closing or closing via control command is released without any check.

The five possible release conditions are independent of one another and can be combined.

NOTE

The closing functions of the device issue individual output indications for the corresponding close command. Be sure that the output indications are assigned to the correct output relays.

No 2851 *AR CLOSE Cmd.* for CLOSE via command of the automatic reclosure,

No 562 *Man.Close Cmd* for manual CLOSE via binary input,

No. 2961 *Sync.CloseCmd* for CLOSE via synchronism check (not required if synchronism check releases the other CLOSE commands),

No 7329 *CB1-TEST close* for CLOSE by circuit breaker test

additionally CLOSE command via control, e.g. *Brk Close*

No 510 *Relay CLOSE* general CLOSE command. It comprises all CLOSE commands described above.

Connections

The 7VK61 provides three voltage inputs for connection of the reference voltage U_{sy1} and one voltage input for the voltage $U_{sy2}$to be synchronized (see example in *Figure 2-23*). If the connection is to all three phases, the phase-to-earth voltages are always connected for U_{sy1} whereas all connection types (phase-to-earth, phase-to-phase) are allowed for the single-phase connection of U_{sy1}. The latter holds also for the voltage U_{sy2}

to be synchronized. If the connections U_{sy1} and U_{sy2} differ with regard to the phase angle, parameter 214 **φ Usy2-Usy1** is to be set to adjust the angle.

Connection, multiple-phase

If the phase-to-earth voltages are connected to all three phases, parameter 106 is set to **VT CONNECTION** = ***3phase*** during configuration. The following figure shows a connection example. In this example, the phase-to-earth voltage U_{L1-E} is the voltage to be synchronized. Accordingly for the parameter 212 **Usy2 connection** = ***L1-E*** must be selected, so that corresponding voltages will be compared.

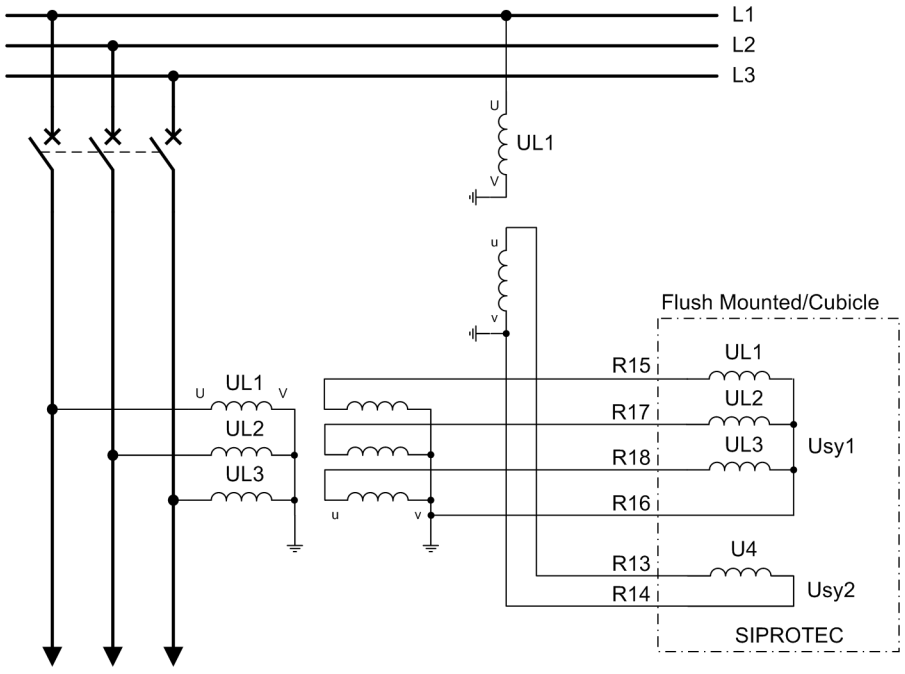

[sync-dreiphasenanschluss-l-e-131102-kn, 1, en_GB]

Figure 2-23 Example of a three-phase phase-to-earth connection

Connection, single-phase

If only a single-phase voltage is available as reference voltage U_{sy1}, parameter 106 is set to **VT CONNECTION** = ***1phase*** during configuration. If this type of connection is used, the reference voltage U_{sy1} must always be connected to the voltage input U_{L1} of the 7VK61, regardless of the phase actually used at the primary voltage transformer. In this case, parameter 212 will be hidden since only two voltages are available. As the example in the following figure shows, the reference voltage U_{sy1} does not necessarily have to assume the same phase angle as the voltage U_{sy2} to be synchronized. The reference voltage on primary side is UL2–E, the voltage to be synchronized on primary side is UL3–E. The necessary phase-angle adjustment is here accomplished via parameter 214 **φ Usy2-Usy1**. Should also the amplitudes of the two voltages differ from each other, parameter 215 **Usy1/Usy2 ratio** can be set to adjust them.

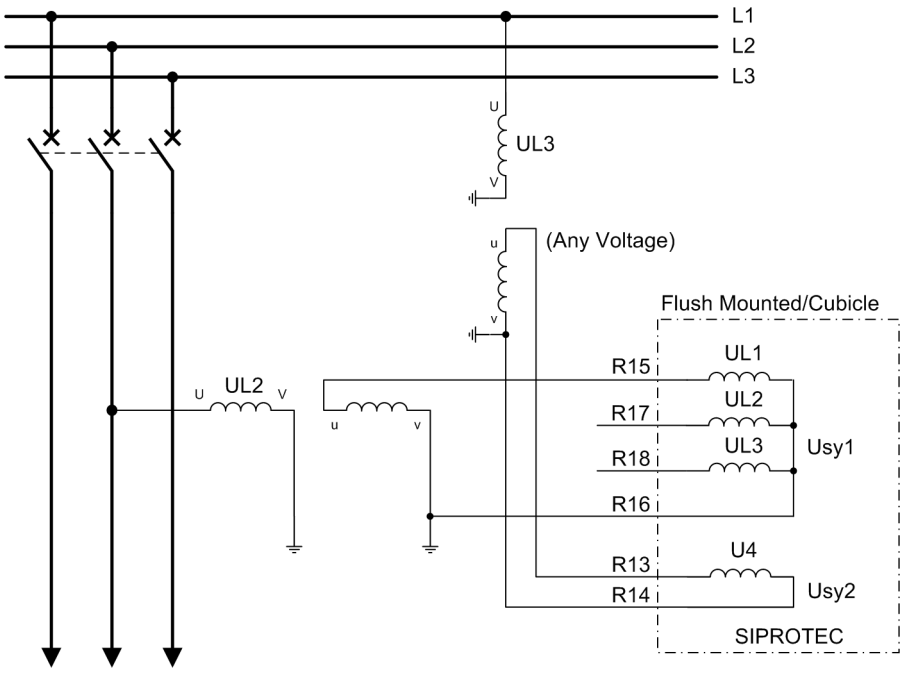

[sync-einphasenanschluss-l-e-131102-kn, 1, en_GB]

Figure 2-24 Example of a single-phase phase-to-earth connection

Notes on the Information List

The most important information messages of the device are briefly explained below, except those already detailed in the following lists or in the previous paragraphs.

>Sync. Start MC (No. 2905)

Binary input which enables direct initiation of the synchronism check with setting parameters for manual close. This initiation with setting parameters for manual close always has precedence if binary inputs *>Sync. Start MC* (No 2905) and *>Sync. Start AR* (No 2906, see below), are activated at the same time.

>Sync. Start AR (No. 2906)

Measuring request from an external automatic reclosure device. The parameters of synchronism check set for automatic reclosure are valid here.

Sync. req.CNTRL (No. 2936)

Measurement request of the control function; this request is evaluated on event-triggered basis and only generated if the control issues a measurement request.

Sync. release (No. 2951)

Release signal to an external automatic reclosure device.

2.4.3 Settings

Addresses which have an appended "A" can only be changed with DIGSI, under "Additional Settings".

Addr.	Parameter	Setting Options	Default Setting	Comments
3501	FCT Synchronism	ON OFF ON:w/o CloseCmd	ON	Synchronism and Voltage Check function
3502	Dead Volt. Thr.	1 .. 100 V	5 V	Voltage threshold dead line / bus
3503	Live Volt. Thr.	20 .. 125 V	90 V	Voltage threshold live line / bus
3504	Umax	20 .. 140 V	110 V	Maximum permissible voltage

Addr.	Parameter	Setting Options	Default Setting	Comments
3507	T-SYN. DURATION	0.01 .. 600.00 sec	1.00 sec	Maximum duration of synchronism-check
3508	T SYNC-STAB	0.00 .. 30.00 sec	0.00 sec	Synchronous condition stability timer
3509	SyncCB	(Einstellmöglichkeiten anwendungsabhängig)	none	Synchronizable circuit breaker
3510	Op.mode with AR	with T-CB close w/o T-CB close	w/o T-CB close	Operating mode with AR
3511	AR maxVolt.Diff	1.0 .. 60.0 V	2.0 V	Maximum voltage difference
3512	AR maxFreq.Diff	0.03 .. 2.00 Hz	0.10 Hz	Maximum frequency difference
3513	AR maxAngleDiff	2 .. 80 °	10 °	Maximum angle difference
3515A	AR SYNC-CHECK	YES NO	YES	AR at Usy2>, Usy1>, and Synchr.
3516	AR Usy1<Usy2>	YES NO	NO	AR at Usy1< and Usy2>
3517	AR Usy1>Usy2<	YES NO	NO	AR at Usy1> and Usy2<
3518	AR Usy1<Usy2<	YES NO	NO	AR at Usy1< and Usy2<
3519	AR OVERRIDE	YES NO	NO	Override of any check before AR
3530	Op.mode with MC	with T-CB close w/o T-CB close	w/o T-CB close	Operating mode with Man.Cl
3531	MC maxVolt.Diff	1.0 .. 60.0 V	2.0 V	Maximum voltage difference
3532	MC maxFreq.Diff	0.03 .. 2.00 Hz	0.10 Hz	Maximum frequency difference
3533	MC maxAngleDiff	2 .. 80 °	10 °	Maximum angle difference
3535A	MC SYNCHR	YES NO	YES	Manual Close at Usy2>, Usy1>, and Synchr
3536	MC Usy1< Usy2>	YES NO	NO	Manual Close at Usy1< and Usy2>
3537	MC Usy1> Usy2<	YES NO	NO	Manual Close at Usy1> and Usy2<
3538	MC Usy1< Usy2<	YES NO	NO	Manual Close at Usy1< and Usy2<
3539	MC OVERRIDE	YES NO	NO	Override of any check before Man.Cl

2.4.4 Information List

No.	Information	Type of Informa-tion	Comments
2901	>Sync. on	SP	>Switch on synchro-check function
2902	>Sync. off	SP	>Switch off synchro-check function
2903	>BLOCK Sync.	SP	>BLOCK synchro-check function
2905	>Sync. Start MC	SP	>Start synchro-check for Manual Close
2906	>Sync. Start AR	SP	>Start synchro-check for AR
2907	>Sync. synch	SP	>Sync-Prog. Live bus / live line / Sync

No.	Information	Type of Informa-tion	Comments
2908	>Usy1>Usy2<	SP	>Sync-Prog. Usy1>Usy2<
2909	>Usy1<Usy2>	SP	>Sync-Prog. Usy1<Usy2>
2910	>Usy1<Usy2<	SP	>Sync-Prog. Usy1<Usy2<
2911	>Sync. o/ride	SP	>Sync-Prog. Override (bypass)
2930	Sync. on/off BI	IntSP	Synchro-check ON/OFF via BI
2931	Sync. OFF	OUT	Synchro-check is switched OFF
2932	Sync. BLOCK	OUT	Synchro-check is BLOCKED
2934	Sync. faulty	OUT	Synchro-check function faulty
2935	Sync.Tsup.Exp	OUT	Synchro-check supervision time expired
2936	Sync. req.CNTRL	OUT	Synchro-check request by control
2941	Sync. running	OUT	Synchronization is running
2942	Sync.Override	OUT	Synchro-check override/bypass
2943	Synchronism	OUT	Synchronism detected
2944	SYNC Usy1>Usy2<	OUT	SYNC Condition Usy1>Usy2< true
2945	SYNC Usy1<Usy2>	OUT	SYNC Condition Usy1<Usy2> true
2946	SYNC Usy1<Usy2<	OUT	SYNC Condition Usy1<Usy2< true
2947	Sync. Udiff>	OUT	Sync. Voltage diff. greater than limit
2948	Sync. fdiff>	OUT	Sync. Freq. diff. greater than limit
2949	Sync. φ-diff>	OUT	Sync. Angle diff. greater than limit
2951	Sync. release	OUT	Synchronism release (to ext. AR)
2961	Sync.CloseCmd	OUT	Close command from synchro-check
2970	SYNC fsy2>>	OUT	SYNC frequency fsy2 > (fn + 3Hz)
2971	SYNC fsy2<<	OUT	SYNC frequency fsy2 < (fn + 3Hz)
2972	SYNC fsy1>>	OUT	SYNC frequency fsy1 > (fn + 3Hz)
2973	SYNC fsy1<<	OUT	SYNC frequency fsy1 < (fn + 3Hz)
2974	SYNC Usy2>>	OUT	SYNC voltage Usy2 >Umax (P.3504)
2975	SYNC Usy2<<	OUT	SYNC voltage Usy2 < U> (P.3503)
2976	SYNC Usy1>>	OUT	SYNC voltage Usy1 >Umax (P.3504)
2977	SYNC Usy1<<	OUT	SYNC voltage Usy1 < U> (P.3503)
2978	SYNC Usy2>Usy1	OUT	SYNC Udiff too large (Usy2>Usy1)
2979	SYNC Usy2<Usy1	OUT	SYNC Udiff too large (Usy2<Usy1)
2980	SYNC fsy2>fsy1	OUT	SYNC fdiff too large (fsy2>fsy1)
2981	SYNC fsy2<fsy1	OUT	SYNC fdiff too large (fsy2<fsy1)
2982	SYNC φsy2>φsy1	OUT	SYNC PHIdiff too large (PHIsy2>PHIsy1)
2983	SYNC φsy2<φsy1	OUT	SYNC PHIdiff too large (PHIsy2<PHIsy1)

2.5 Under and over-voltage protection (optional)

Voltage protection has the function of protecting electrical equipment against undervoltage and overvoltage. Both operational states are unfavourable as overvoltage may cause, for example, insulation problems or undervoltage may cause stability problems.

The overvoltage protection in the 7VK61 detects the phase voltages U_{L1-E}, U_{L2-E} and U_{L3-E}, the phase-to-phase voltages U_{L1-L2}, U_{L2-L3} and U_{L3-L1}, as well as the displacement voltage $3U_0$. Instead of the displacement voltage any other voltage that is connected to the fourth voltage input U_4 of the device can be detected. Furthermore, the device calculates the positive sequence system voltage and the negative sequence system voltage so that the symmetrical components are also monitored.

If there is only **one** voltage transformer in the system, the parameter 106 **VT CONNECTION** must be set accordingly during configuration. Also, it is indispensable in this case that the secondary winding of the voltage transformer is connected to the input U_{L1} of the 7VK61.

The undervoltage protection can also use the phase voltages U_{L1-E}, U_{L2-E} and U_{L3-E}, the phase-to-phase voltages U_{L1-L2}, U_{L2-L3} and U_{L3-L1}, as well as the positive sequence components.

These voltage protection functions can be combined according to the user's requirements. They can be switched on or off separately, or used for alarm purposes only. In the latter case, the respective trip commands do not appear. Each voltage protection function is dual-stage, i.e. it is provided with two threshold settings each with the appropriate times delay.

Abnormally high voltages often occur e.g. in low loaded, long distance transmission lines, in islanded systems when generator voltage regulation fails, or after full load shutdown of a generator with the generator disconnected from the system. Even if compensation reactors are used to avoid line overvoltages by compensation of the line capacitance and thus reduction of the overvoltage, the overvoltage will endanger the insulation if the reactors fail (e.g. due to fault clearance). The line must be de-energised within a very short time.

The undervoltage protection can be applied, for example, for disconnection or load shedding tasks in a system. Furthermore, this protection scheme can detect impending stability problems. With induction machines undervoltages have an effect on the stability and permissible torque thresholds.

2.5.1 Overvoltage Protection

Phase-to-earth overvoltage

Figure 2-25 depicts the logic diagram of the phase voltage stages. The fundamental component is numerically filtered from each of the three measuring voltages so that harmonics or transient voltage peaks are largely eliminated. Two threshold stages **Uph-e>** (address3702) and **Uph-e>>** (address 3704) are compared with the voltages. If a phase voltage exceeds these thresholds, it is indicated in a phase-segregated way. In addition there is a general pickup indication for each stage *Uph-e> Pickup* and *Uph-e>> Pickup*. The drop out to pick up ratio can be set (**Uph-e>(>) RESET** (address3709)).

Every stage starts a time delay which is common to all phases. Expiry of the respective time delay **T Uph-e>** (address3703) or **T Uph-e>>** (address3705) is signaled and normally results in the trip command *Uph-e>(>) TRIP*.

The phase-to-earth overvoltage protection can be blocked via a binary input *>Uph-e>(>) BLK*.

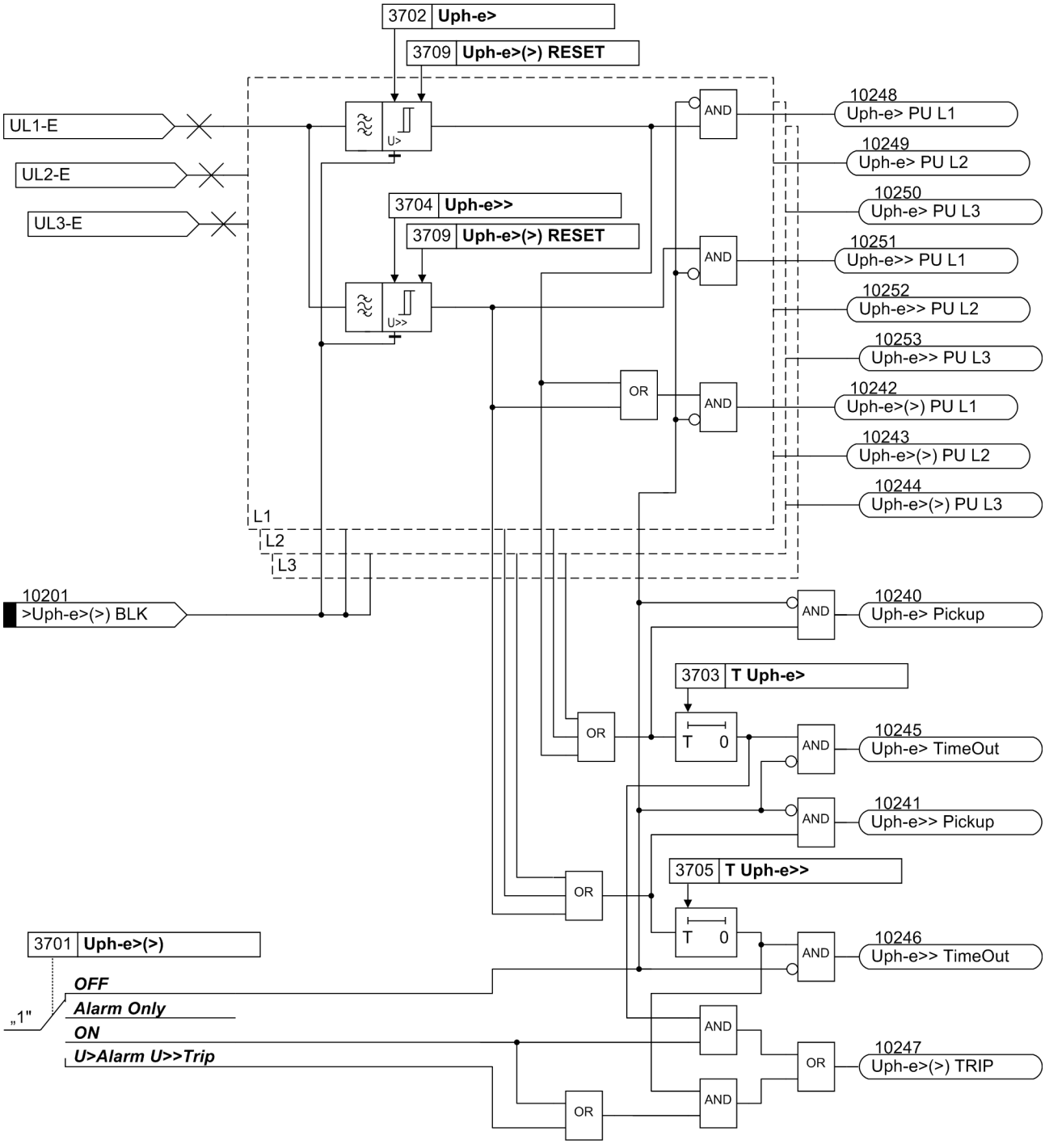

[logikdia-ueberspgschutz-phasenspg-wlk-310702, 1, en_GB]

Figure 2-25 Logic diagram of the overvoltage protection for phase voltage

Phase-to-phase overvoltage

The phase-to-phase overvoltage protection operates just like the phase-to-earth protection except that it detects phase-to-phase voltages. Accordingly, phase-to-phase voltages which have exceeded one of the stage thresholds **Uph-ph>** (address 3712) or **Uph-ph>>** (address3714 are also indicated. Beyond this, applies in principle. *Figure 2-25*.

The phase-to-phase overvoltage protection can also be blocked via a binary input *>Uph-ph>(>) BLK*.

Overvoltage positive sequence system U_1

The device calculates the positive sequence system according to its defining equation

$$\underline{U}_1 = {}^1/_3 \cdot (\underline{U}_{L1} + \underline{a} \cdot \underline{U}_{L2} + \underline{a}^2 \cdot \underline{U}_{L3})$$

where $\underline{a} = e^{j120°}$.

The resulting positive sequence voltage is fed to the two threshold stages **U1>** (address 3732) and **U1>>** (address 3734) (see *Figure 2-26*). Combined with the associated time delays **T U1>** (address 3733) and **T U1>>** (address 3735), these stages form a two-stage overvoltage protection based on the positive sequence system. Here too, the drop-out to pickup ratio can be set.

The overvoltage protection for the positive sequence system can also be blocked via a binary input *>U1>(>) BLK*.

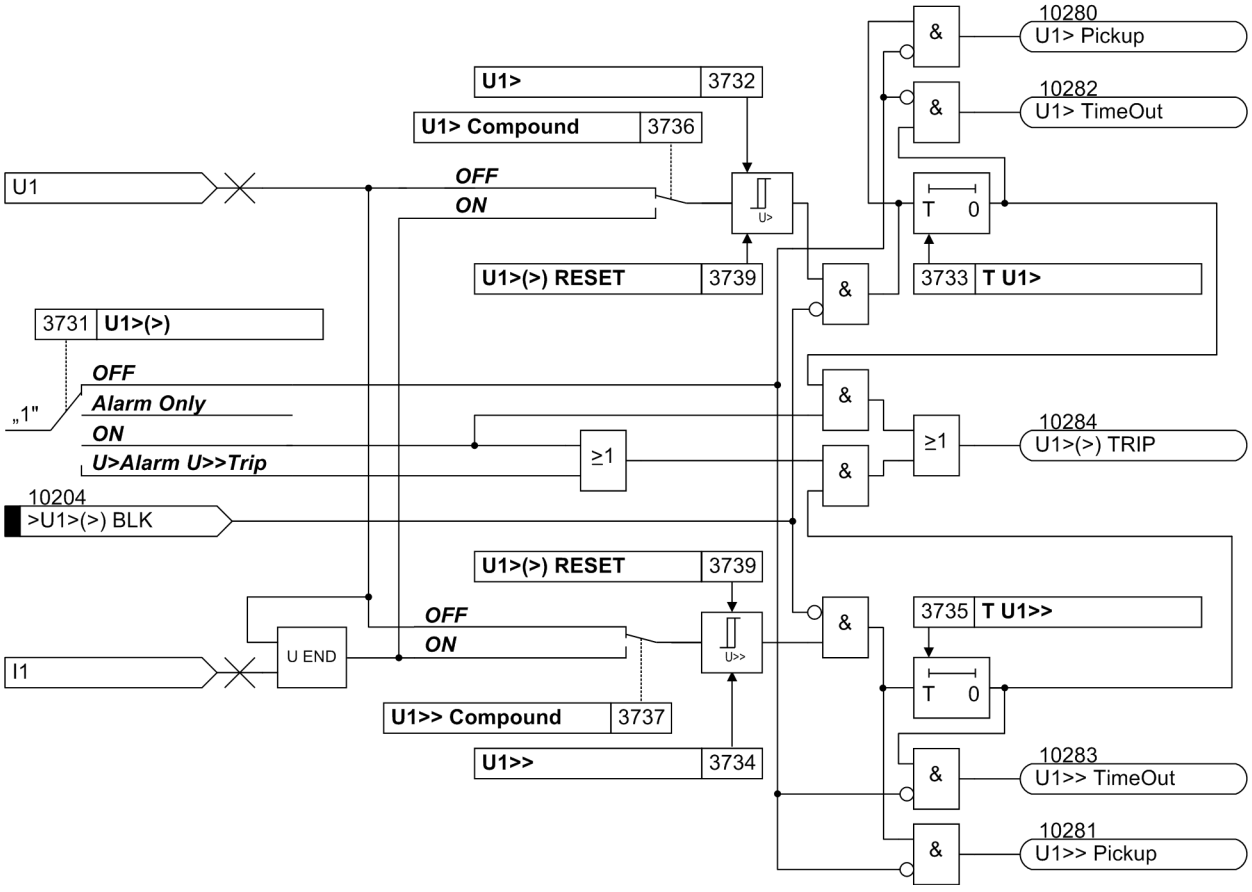

[logikdia-ueberspgschutz-spgmitsys-wlk-310702, 1, en_GB]

Figure 2-26 Logic diagram of the overvoltage protection for the positive sequence voltage system

Please bear in mind that the device is designed for a three-phase voltage connection. Single-phase connection is also possible but no adjustments have been made in this respect. This must be taken into consideration when setting the pickup value.

Overvoltage negative sequence system U_2

The device calculates the negative sequence system voltages according to its defining equation:

$$\underline{U}_2 = {}^1/_3 \cdot (\underline{U}_{L1} + \underline{a}^2 \cdot \underline{U}_{L2} + \underline{a} \cdot \underline{U}_{L3})$$

where $\underline{a} = e^{j120°}$.

The resulting negative sequence voltage is fed to the two threshold stages **U2>** (address 3742) and **U2>>** (address 3744). *Figure 2-27* shows the logic diagram. Combined with the associated time delays **T U2>** (address 3743) and **T U2>>** (address 3745), these stages form a two-stage overvoltage protection for the negative sequence system. Here too, the drop-out to pickup ratio can be set.

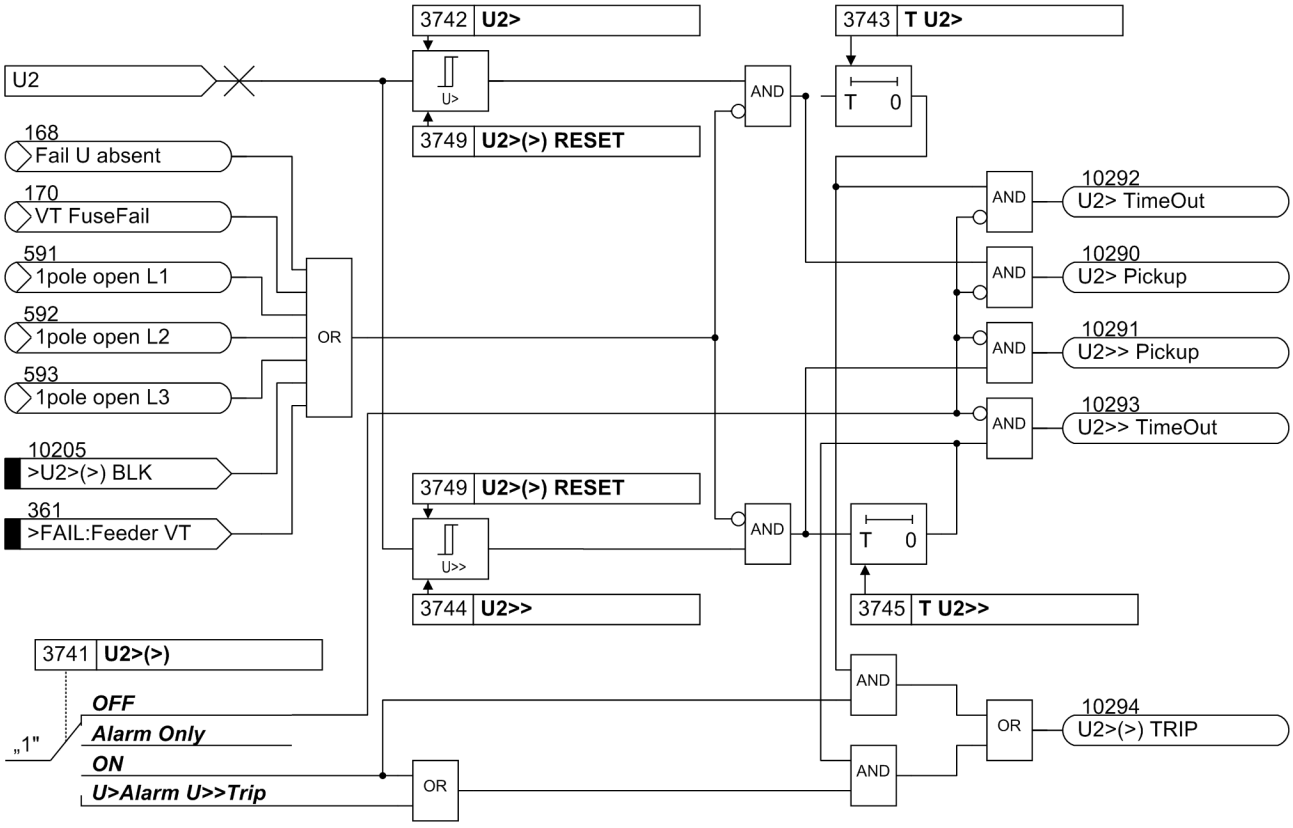

[logikdia-ueberspgschutz-u2-spggegsys-wlk-280802, 1, en_GB]

Figure 2-27 Logic diagram of the overvoltage protection for the negative sequence voltage system U_2

The overvoltage protection for the negative sequence system can also be blocked via a binary input *>U2>(>) BLK*. The stages of the negative sequence voltage protection are automatically blocked as soon as an asymmetrical voltage failure was detected ("Fuse-Failure-Monitor", also see Section *2.7.1 Measurement Supervision*, margin heading "Fast Fuse Failure Monitor (Non-symmetrical Voltages)") or when tripping of the MCB for voltage transformers has been signalled via the binary input *>FAIL:Feeder VT*.

During the single-pole dead time, the stages of the negative-sequence overvoltage protection are automatically blocked since the occurring negative sequence values are only influenced by the asymmetrical power flow, not by the fault in the system. If the device cooperates with an external automatic reclosure function, or if a singlepole tripping can be triggered by a different protection system (working in parallel), the overvoltage protection for the negative sequence system must be blocked via a binary input during single-pole tripping.

Please bear in mind that the device is designed for a three-phase voltage connection. Single-phase connection is also possible but no adjustments have been made in this respect. This must be taken into consideration when setting the pickup value.

Overvoltage zero-sequence system $3U_0$

Figure 2-28 depicts the logic diagram of the zero-sequence voltage stage. The fundamental component is numerically filtered from the measuring voltage so that the harmonics or transient voltage peaks remain largely eliminated.

The triple zero-sequence voltage $3 \cdot U_0$ is fed to the two threshold stages **3U0>** (address 3722) and **3U0>>** (address 3724). Combined with the associated time delays **T 3U0>** (address 3723) and **T 3U0>>** (address 3725), these stages form a two-stage overvoltage protection for the zero-sequence system. Here too, the dropout to pickup ratio can be set (**3U0>(>) RESET**, address **3U0>(>) RESET**). Furthermore, a restraint delay can be configured which is implemented by repeated measuring (approx. 3 periods).

The overvoltage protection for the zero-sequence system can also be blocked via a binary input *>3U0>(>) BLK*. The stages of the zero-sequence voltage protection are automatically blocked as soon as an asymmetrical voltage failure was detected ("Fuse-Failure-Monitor", also see Section *2.7.1 Measurement Supervision*, margin

heading “Fuse Failure Monitor (Non-symmetrical Voltages)”) or when the trip of the mcb for voltage transformers has been signalled via the binary input *>FAIL:Feeder VT* (internal indication “internal blocking”).

The stages of the zero-sequence voltage protection are automatically blocked during single-pole automatic reclose dead time to avoid pickup with the asymmetrical power flow arising during this state. If the device cooperates with an external automatic reclosure function, or if a single-pole tripping can be triggered by a different protection system (working in parallel), the overvoltage protection for the zero-sequence system must be blocked via a binary input during single-pole tripping.

This automatic blocking function requires the condition of the system to be detected without doubt. This means that it is only active if all three current and voltage transformers are connected.

According to *Figure 2-28* the device calculates the voltage to be monitored:

$3 \cdot \underline{U}_0 = \underline{U}_{L1} + \underline{U}_{L2} + \underline{U}_{L3}$.

This applies if no suitable voltage is connected to the fourth measuring input U_4.

However, if the displacement voltage U_{delta} of the voltage transformer set is directly connected to the fourth measuring input U_4 of the device and this information was entered during configuration, the device will automatically use this voltage and calculate the triple zero-sequence voltage.

$3 \cdot U_0 =$ **Uph / Udelta** $\cdot U_4$

Since the voltage transformation ratio of the voltage transformer set is usually

$$\frac{U_{N\,prim}}{\sqrt{3}} / \frac{U_{N\,sec}}{\sqrt{3}} / \frac{U_{N\,sec}}{3}$$

[spguebersetz-spgwdlr-wlk-310702, 1, en_GB]

the factor is set to **Uph / Udelta** = $3/\sqrt{3} = \sqrt{3} = 1.73$. For more details, refer to Power System Data 1 at margin heading “Voltage Connections” via address 211.

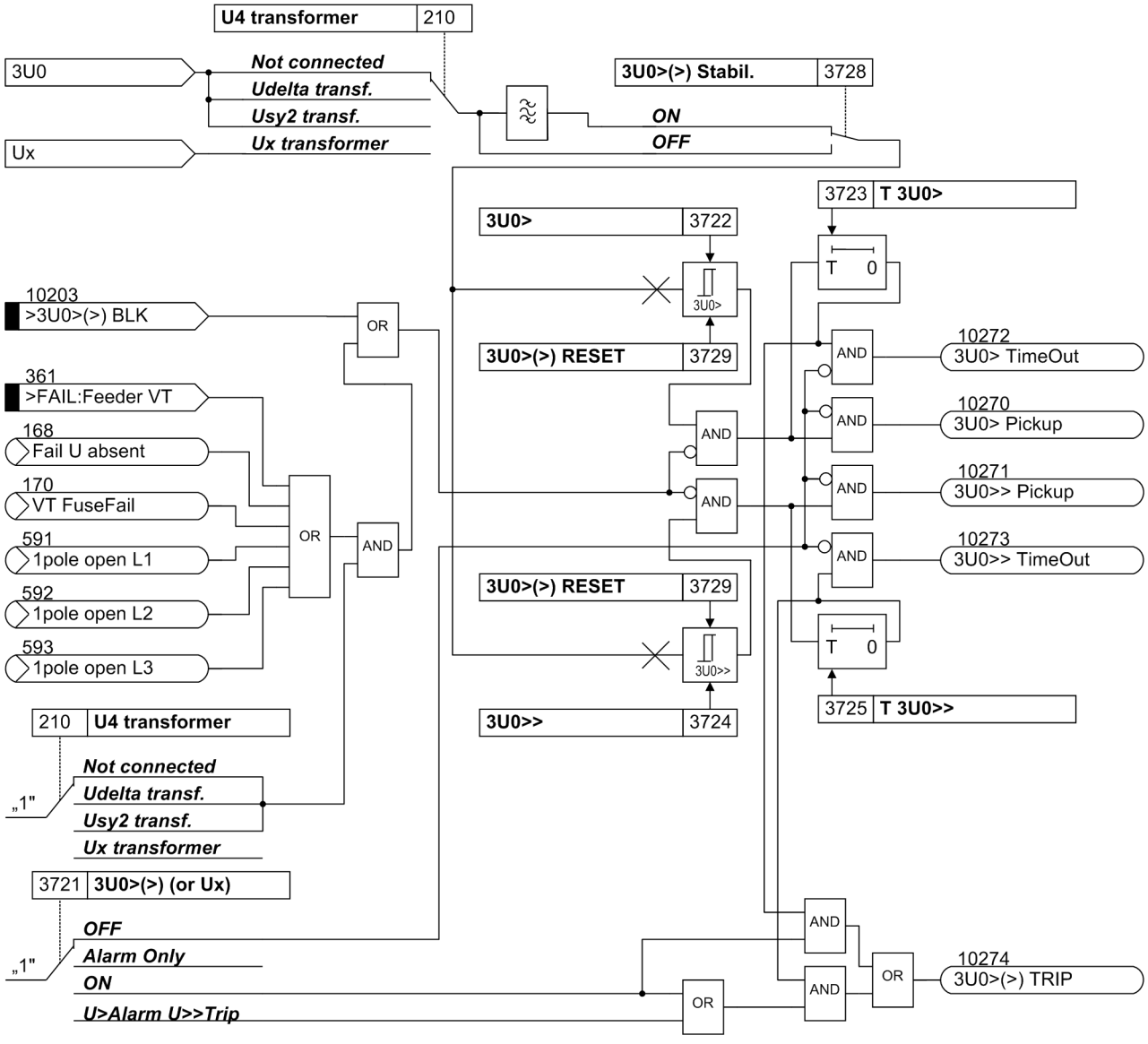

[logikdia-ueberspgschutz-nullspg-wlk-310702, 1, en_GB]

Figure 2-28 Logic diagram of the overvoltage protection for zero sequence voltage

Freely selectable single-phase voltage

As the zero-sequence voltage stages operate separately and independently of the other protection overvoltage functions, they can be used for any other single-phase voltage. Therefore the fourth voltage input U_4 of the device must be assigned accordingly (also see Section *2.1.3 Power System Data 1* "Voltage Connection").

The stages can be blocked via a binary input *>3U0>(>) BLK*. Internal blocking is not accomplished in this application case.

2.5.2 Undervoltage protection

Undervoltage Phase-to-earth

Figure 2-29 depicts the logic diagram of the phase voltage stages. The fundamental component is numerically filtered from each of the three measuring voltages so that harmonics or transient voltage peaks are largely eliminated. Two threshold stages **Uph-e<** (address 3752) and **Uph-e<<** (address 3754) are compared with the voltages. If the phase voltage falls below a threshold it is indicated in a phase-segregated way. Further-

more, a general pickup indication *Uph-e< Pickup* and *Uph-e<< Pickup* is given. The drop-out to pickup ratio can be set (**Uph-e<(<) RESET**, address 3759).

Every stage starts a time delay which is common to all phases. The expiry of the respective time delay **T Uph-e<** (address 3753) or **T Uph-e<<** (address 3755) is signalled and usually results in the trip command *Uph-e<(<) TRIP*.

Depending on the configuration of the substations, the voltage transformers are located on the busbar side or on the outgoing feeder side. This results in a different behaviour of the undervoltage protection when the line is de-energised. While the voltage usually remains present or reappears on the busbar side after a trip command and opening of the circuit breaker, it becomes zero on the outgoing side. For the undervoltage protection, this results in a pickup state being present if the voltage transformers are on the outgoing side. If this pickup must be reset, the current can be used as an additional criterion (current supervision **CURR.SUP. Uphe<**, address 3758) to achieve this result. Undervoltage will then only be detected if, together with the undervoltage condition, the minimum current **PoleOpenCurrent** of the corresponding phase is also exceeded. This condition is communicated by the central function control of the device.

The undervoltage protection phase-to-earth can be blocked via a binary input *Uph-e<(<) BLK*. The stages of the undervoltage protection are then automatically blocked if a voltage failure is detected ("Fuse-Failure-Monitor", also see Section *2.7.1 Measurement Supervision*) or if the trip of the mcb of the voltage transformers is indicated (internal blocking) via the binary input *>FAIL:Feeder VT*.

Also during a single-pole automatic reclose dead time the stages of the undervoltage protection are automatically blocked in the pole open state. If necessary, the current criterion will be considered, so that the stages do not respond to the undervoltage of the disconnected phase when voltage transformers are located on the outgoing side. Only such stages are blocked during the single-pole dead time that can actually generate a trip command according to their setting.

This automatic blocking function requires the condition of the system to be detected without doubt. This means that it is only active if all three current and voltage transformers are connected.

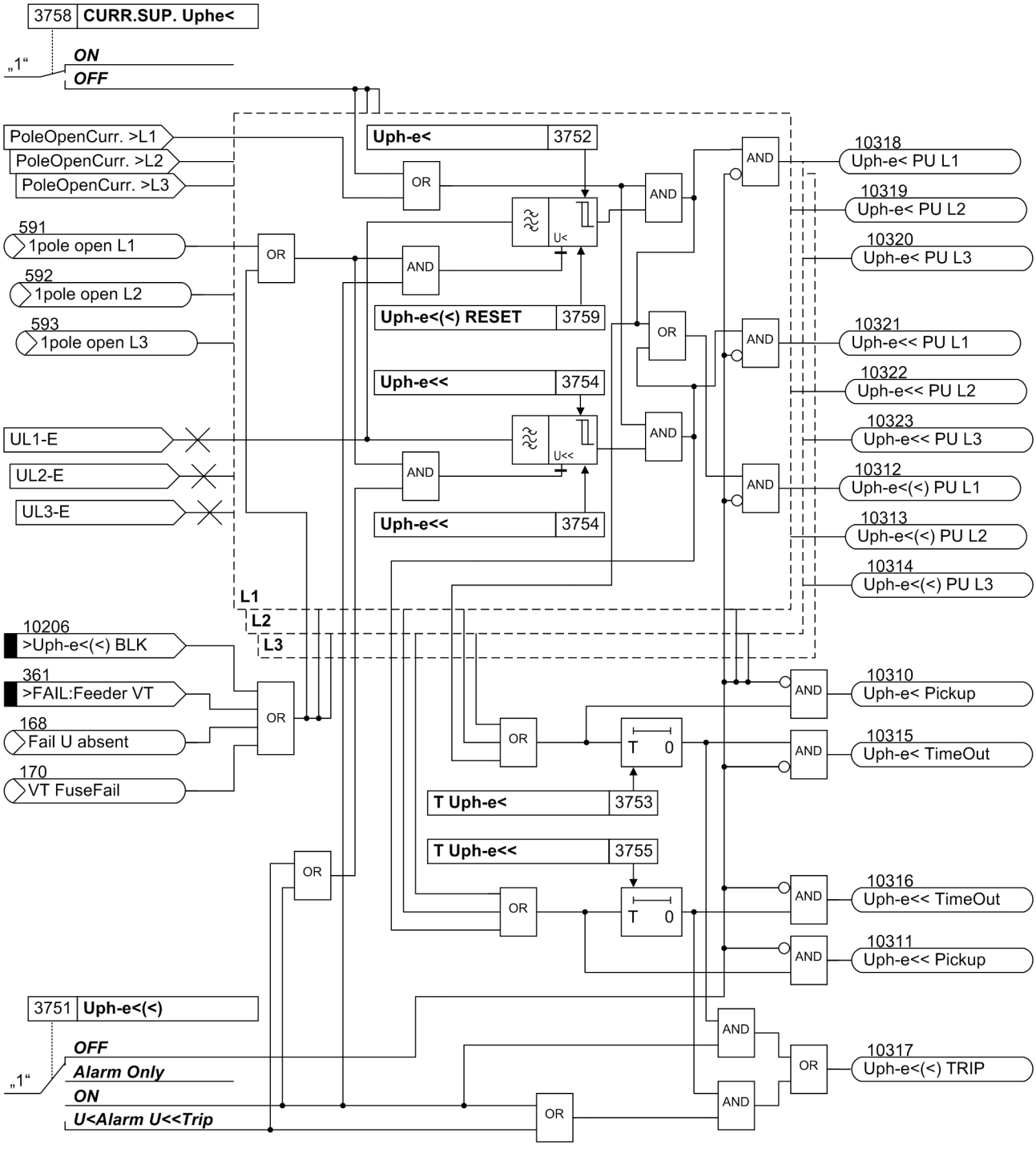

[logikdia-unterspgschutz-phasenspg-wlk-310702, 1, en_GB]

Figure 2-29 Logic diagram of the undervoltage protection for phase voltages

Phase-to-phase undervoltage

Basically, the phase-to-phase undervoltage protection operates like the phase-to-earth protection except that it detects phase-to-phase voltages. Accordingly, both phases are indicated during pickup of an undervoltage stage the value fell below one of the stage thresholds **Uph-ph<** (address 3762) or **Uph-ph<<** (address 3764). Beyond this, *Figure 2-29* applies in principle.

It is sufficient for the current criterion that current flow is detected in one of the involved phases.

The phase-to-phase undervoltage protection can also be blocked via a binary input *>Uphph<(<) BLK*. There is an automatic blocking if the measuring voltage failure was detected or voltage mcb tripping was indicated (internal blocking of the phases affected by the voltage failure).

During single-pole dead time for automatic reclosure the stages of the undervoltage protection are automatically blocked in the disconnected phase so that they do not respond to the undervoltage of the disconnected phase provided that the voltage transformers are located on the outgoing side. Only such stages are blocked during the single-pole dead time that can actually initiate tripping according to their setting.

This automatic blocking function requires the condition of the system to be detected without doubt. This means that it is only active if all three current and voltage transformers are connected.

Undervoltage positive sequence system U_1

The device calculates the positive sequence system according to its defining equation

$$\underline{U}_1 = {}^1/_3 \cdot (\underline{U}_{L1} + \underline{a} \cdot \underline{U}_{L2} + \underline{a}^2 \cdot \underline{U}_{L3})$$

where $\underline{a} = e^{j120°}$.

The resulting positive sequence voltage is fed to the two threshold stages **U1<** (address 3772) and **U1<<** (address 3774 (see *Figure 2-30*). Combined with the associated time delays **T U1<** (address 3773) and **T U1<<** (address 3775). these stages form a two-stage undervoltage protection for the positive sequence system.

The current can be used as an additional criterion for the undervoltage protection of the positive sequence system (current supervision **CURR.SUP.U1<**, address 3778). An undervoltage is only detected if the current flow is detected in at least one phase together with the undervoltage criterion.

The undervoltage protection for the positive sequence system can be blocked via the binary input *>U1<(<) BLK*. The stages of the undervoltage protection are automatically blocked if voltage failure is detected ("Fuse-Failure-Monitor", also see Section *2.7.1 Measurement Supervision*) or, if the trip of the mcb for the voltage transformer is indicated via the binary input *>FAIL:Feeder VT*.

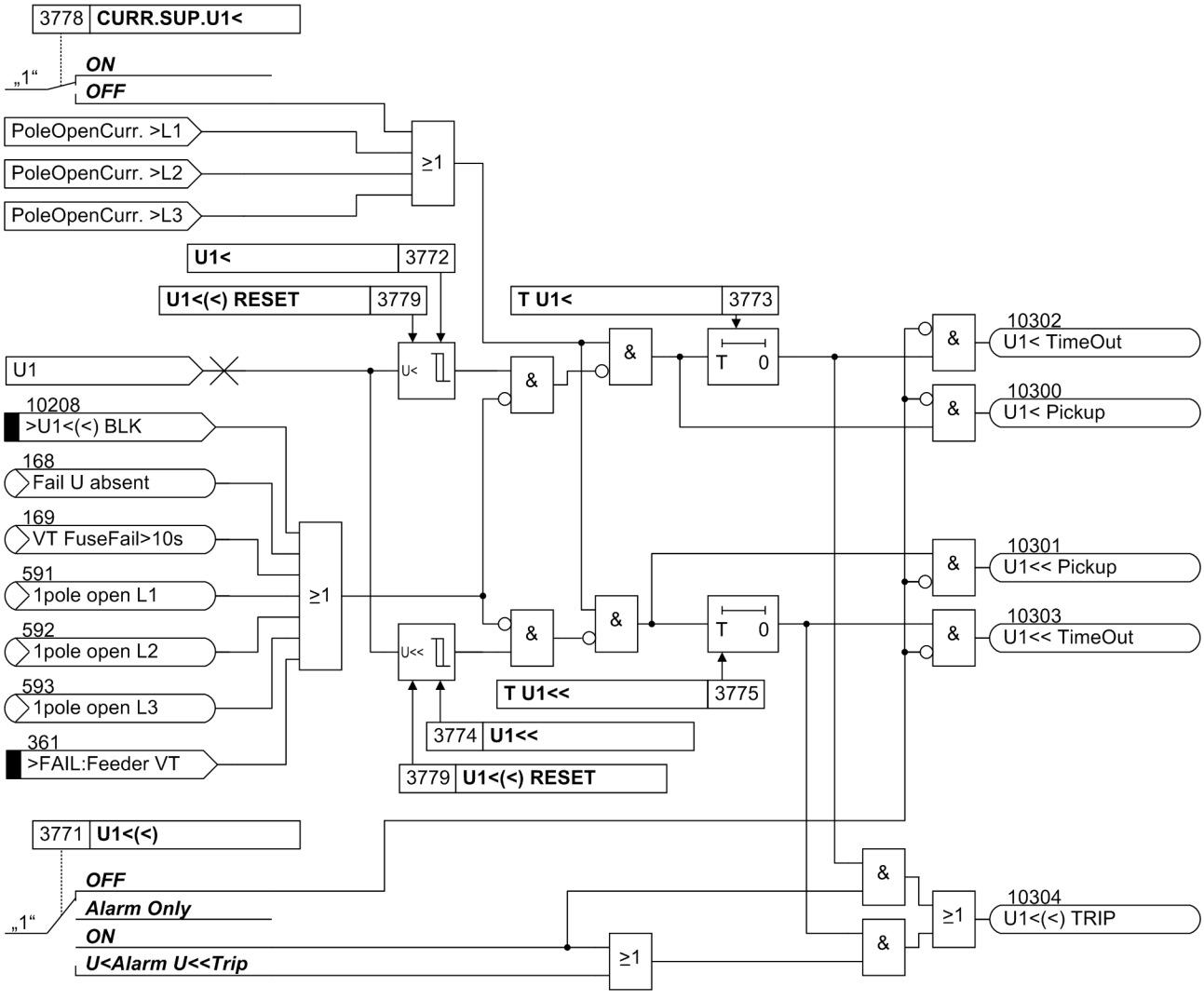

[logikdia-unterspgschutz-spgmitsys-wlk-310702, 1, en_GB]

Figure 2-30 Logic diagram of the undervoltage protection for positive sequence voltage system

During single-pole dead time for automatic reclosure, the stages of positive sequence undervoltage protection are automatically blocked. In this way, the stages do not respond to the reduced positive sequence voltage caused by the disconnected phase in case the voltage transformers are located on the outgoing side.

This automatic blocking function requires the condition of the system to be detected without doubt. This means that it is only active if all three current and voltage transformers are connected.

Please bear in mind that the device is designed for a three-phase voltage connection. Single-phase connection is also possible but no adjustments have been made in this respect. This must be taken into consideration when selecting the stage and the pickup value.

Operation Without Current Transformer Connections

The 7VK61 relay can also be operated without current transformer connections. This is achieved by setting parameter 107 **CT CONNECTION** = ***NO*** during configuration. For the undervoltage protection this has the consequence that the current criterion cannot become active and associated parameters are hidden.

2.5.3 Setting Notes

General

The voltage protection can only operate if, when configuring the device scope (address 137), it has been set to ***Enabled***.

The overvoltage and undervoltage stages can detect phase-to-earth voltages, phase-to-phase voltages or the positive sequence voltages; for overvoltage also the negative sequence voltage, zero-sequence voltage or a different single-phase voltage can be used. Any combination is possible. Stages that are not required are switched ***OFF***.



NOTE

For overvoltage protection it is particularly important to observe the setting notes: NEVER set an overvoltage stage (U_{L-E}, U_{L-L}, U_1)lower than an undervoltage stage. This would put the device immediately into a state of permanent pickup which cannot be reset by any measured value operation. As a result, operation of the device would be impossible!

Please bear in mind that the device is designed for a three-phase voltage transformer connection. If the connection is only single-phase, internal matching of the measured quantities will not take place. The positive-sequence component for example is only one third when the connection is to one phase as compared to the three-phase symmetrical connection. Since it is the smallest of the connected voltages which is relevant for the phase-earth or phase-phase stages of the undervoltage protection, these stages are not suitable for a single-phase connection.

Phase-to-earth overvoltage

The phase voltage stages can be switched ***ON*** or ***OFF*** in address 3701 **Uph-e> (>)**. In addition to this, you can set ***Alarm Only***, i.e. these stages operate and send alarms but do not generate any trip command. The setting ***U>Alarm U>>Trip*** creates in addition also a trip command only for the U>> stage.

The settings of the voltage threshold and the timer values depend on the type of application. To detect steady-state overvoltages on long lines carrying no load, set the **Uph-e>** stage (address 3702) to at least 5 % above the maximum stationary phase-to-earth voltage expected during operation. Additionally, a high dropout to pickup ratio is required (address 3709 **Uph-e> (>) RESET** = ***0.98*** presetting). This parameter can only be changed in DIGSI at Display **Additional Settings**. The delay time **T Uph-e>** (address 3703) should be a few seconds so that overvoltages with short duration do not cause tripping.

The U_{ph}>> stage (address 3704) is provided for high overvoltages with short duration. Here an adequately high pickup value is set, e.g. the $1^1/_2$-fold of the nominal phase-to-earth voltage. 0.1 s to 0.2 s are sufficient for the delay time **T Uph-e>>** (address 3705).

Phase-to-phase overvoltage

Basically, the same considerations apply as for the phase voltage stages. These stages can be used instead of the phase voltage stages or additionally. Depending on your choice, set address 3711 **Uph-ph> (>)** to ***ON***, ***OFF***, ***Alarm Only*** or ***U>Alarm U>>Trip***.

As phase-to-phase voltages are monitored, the phase-to-phase values are used for the settings **Uph-ph>** (address 3712) and **Uph-ph>>** (address 3714).

For the delay times **T Uph-ph>** (address 3713) and **T Uph-ph>>** (address 3715) the same considerations apply as above. The same is true for the pickup ratios (address 3719 **Uphph> (>) RESET**). The latter setting can only be altered in DIGSI at **Display Additional Settings**.

Overvoltage positive sequence system U_1

You can use the positive sequence voltage stages instead of or in addition to previously mentioned overvoltage stages. Depending on your choice, set address 3731 **U1> (>)** to ***ON***, ***OFF***, ***Alarm Only*** or ***U>Alarm U>>Trip***.

For symmetrical voltages an increase of the positive sequence system corresponds to an AND gate of the voltages. These stages are particularly suited to the detection of steady-state overvoltages on long, weak-loaded transmission lines (Ferranti effect). Here too, the **U1>** stage (address 3732) with a longer delay time **T U1>** (address 3733) is used for the detection of steady-state overvoltages (some seconds), the **U1>>** stage (address 3734) with the short delay time **T U1>>** (address 3735) is used for the detection of high overvoltages that may jeopardise insulation.

Note that the positive sequence system is established according to its defining equation

$U_1 = {}^1/_3 \cdot |\underline{U}_{L1} + \underline{a} \cdot \underline{U}_{L2} + \underline{a}^2 \cdot \underline{U}_{L3}|$. For symmetrical voltages this is equivalent to a phase-to-earth voltage.

The dropout to pickup ratio (address 3739 **U1>(>) RESET**) is set as high as possible with regard to the detection of even small steady-state overvoltages. This parameter can only be altered in DIGSI at Display **Additional Settings**.

Overvoltage negative sequence system U_2

The negative sequence voltage stages detect asymmetrical voltages. If such voltages should cause tripping, set address 3741 **U2>(>)** to ***ON***. If such conditions will only be reported, set address 3741 **U2>(>)** to ***Alarm Only***. If only one stage is desired to generate a trip command, choose the setting ***U>Alarm U>>Trip***. With this setting a trip command is output by the 2nd stage only. If negative sequence voltage protection is not required, set ***OFF***.

This protection function also has two stages, one being **U2>** stage (address 3742) with a longer time delay **T U2>** (address 3743) for steady-state asymmetrical voltages and the other being **U2>>** stage (address 3744) with a short delay time **T U2>>** (address 3745) for high asymmetrical voltages.

Note that the negative sequence system is calculated according to its defining equation $U_2 = {}^1/_3 \cdot |$ $\underline{U}_{L1} + \underline{a}^2 \cdot \underline{U}_{L2} + \underline{a} \cdot \underline{U}_{L3}|$. For symmetrical voltages and two swapped phases this is equivalent to the phase-to-earth voltage value.

The resetting ratio can be changed **U2>(>) RESET** using the address 3749. This parameter can only be altered in DIGSI at **Display Additional Settings**.

Overvoltage zero-sequence system

The zero-sequence voltage stages can be switched in address 3721 **3U0>(>) (or Ux)** ***ON*** or ***OFF***. In addition to this, you can set ***Alarm Only***, i.e. these stages operate and also send alarms but do not generate any trip command. If a trip command of the 2nd stage is still desired, the setting must be ***U>Alarm U>>Trip***. This protection function can be used for any other single-phase voltage which is connected to the fourth voltage measurement input U_4. Also see section *2.1.3.1 Setting Notes* at margin heading "Voltage Connection".

This protection function also has two stages. The settings of the voltage threshold and the timer values depend on the type of application. Therefore, no general guidelines can be established. The stage **3U0>** (address 3722) is usually set with a high sensitivity and a longer delay time **T 3U0>** (address 3723). The **3U0>>** stage (address 3724) and its delay time **T 3U0>>** (address 3725) enables a second stage to be implemented with less sensitivity and a shorter delay time.

Similar considerations apply if this voltage stage is used for a different voltage at the measuring input U_4.

The zero-voltage stages feature a special time stabilization due to repeated measurements allowing them to be set rather sensitive. This stabilization can be disabled in address 3728 **3U0>(>) Stabil.** if a shorter pickup time is required. This parameter can only be altered in DIGSI at **Display Additional Settings**. Please consider that sensitive settings combined with short pickup times are not recommended.

The drop out to pick up ratio can be changed **3U0>(>) RESET** using the address 3729. This parameter can only be altered in DIGSI at **Display Additional Settings**.

When setting the voltage values please observe the following:

- If U_4 is connected with U_{en} voltage of the set of voltage transformers and this is set as with the Power System Data 1 (see Section *2.1.3.1 Setting Notes* at margin heading "Voltage Connection", address 210 **U4 transformer** = ***Udelta transf.***), the device multiplies this voltage by the matching ratio **Uph / Udelta** (address 211), usually with 1.73. Therefore the voltage measured is $\sqrt{3}\cdot U_{en} = 3\cdot U_0$. When the voltage triangle is fully displaced, the voltage will be $\sqrt{3}$ times the phase-to-phase voltage.
- If any other voltage is connected to U_4 which is not used for voltage protection, and if this was already set in the Power System Data 1 (refer also to Section *2.1.3.1 Setting Notes* at margin heading "Voltage Connection", e.g. **U4 transformer** = ***Usy2 transf.*** or **U4 transformer** = ***Not connected***), the device calculates the zero-sequence voltage from the phase voltages according to its definition $3\cdot U_0 = |\underline{U}_{L1} + \underline{U}_{L2} + \underline{U}_{L3}|$. When the voltage triangle is fully displaced, the voltage will thus be $\sqrt{3}$ times the phase-to-phase voltage.
- If any other AC voltage is connected to U_4 which is used for voltage protection, and if this was already set in the Power System Data 1 (Section *2.1.3.1 Setting Notes* at margin heading "Voltage Connection", **U4 transformer** = ***Ux transformer***), this voltage will be used for the voltage stages without any further factors. This "zero-sequence voltage protection" is then, in reality, a single-phase voltage protection for any kind of voltage at U_4. Note that with a sensitive setting, i.e. close to operational values that are to be expected, not only the time delay **T 3U0>** (address 3723) must be set high, but also the reset ratio **3U0>(>) RESET**(address 3729) must be set as high as possible.

Phase-to-earth undervoltage

The phase voltage stages can be switched ***ON*** or ***OFF*** in address 3751 **Uph-e<(<)**. In addition to this, you can set ***Alarm Only***, i.e. these stages operate and send alarms but do not generate any trip command. You can generate a trip command for the 2nd stage only in addition to the alarm by setting ***U<Alarm U<<Trip***.

This undervoltage protection function has two stages. The **Uph-e<** stage (address 3752) with a longer setting of the time **T Uph-e<** (address 3753) operates in the case of minor undervoltages. However, the value set here must not be higher than the undervoltage permissible in operation. In the presence of higher voltage dips, the **Uph-e<<** stage (address 3754) with the delay **T Uph-e<<** (address 3755) becomes active.

The dropout to pickup ratio **Uph-e<(<) RESET** can be set in address 3759. This parameter can only be altered in DIGSI at Display **Additional Settings**.

The settings of the voltages and times depend on the intended use; therefore no general recommendations for the settings can be given. For load shedding, for example, the values are often determined by a priority grading coordination chart. In case of stability problems, the permissible levels and durations of overvoltages must be observed. With induction machines undervoltages have an effect on the permissible torque thresholds.

If the voltage transformers are located on the line side, the measuring voltages will be missing when the line is disconnected. To avoid that the undervoltage levels in these cases are or remain picked up, the current criterion **CURR.SUP. Uphe<** (address 3758) is switched ***ON***. With busbar side voltage transformers it can be switched ***OFF***. However, if the busbar is dead, the undervoltage protection will pick up and expire and then remain in a picked-up state. It must therefore be ensured in such cases that the protection is blocked by a binary input.

If the 7VK61 is operated without current transformer connection, the current criterion is of no use and associated parameters are hidden.

Phase-to-phase undervoltage

Basically, the same considerations apply as for the phase voltage stages. These stages may replace the phase voltage stages or be used additionally. Depending on your choice, set address 3761 **Uph-ph<(<)** to ***ON***, ***OFF***, ***Alarm Only*** or ***U<Alarm U<<Trip***.

As phase-to-phase voltages are monitored, the phase-to-phase values are used for the settings **Uph-ph<** (address 3762) and **Uph-ph<<** (address 3764).

The corresponding time delays are **T Uph-ph<** (address 3763) and **T Uphph<<** (address 3765).

The dropout to pickup ratio **Uphph<(<) RESET** can be set in address 3769. This parameter can only be altered in DIGSI at Display **Additional Settings**.

If the voltage transformers are located on the line side, the measuring voltages will be missing when the line is disconnected. To avoid that the undervoltage levels in these cases are or remain picked up, the current criterion **CURR. SUP. Uphph<** (address 3768) is switched ***ON***. With busbar side voltage transformers it can be switched ***OFF***. However, if the busbar is dead, the undervoltage protection will pick up and expire and then remain in a picked-up state. It must therefore be ensured in such cases that the protection is blocked by a binary input.

If the 7VK61 is operated without current transformer connection, the current criterion is of no use and associated parameters are hidden.

Undervoltage positive sequence systemU_1

The positive sequence undervoltage stages can be used instead of or in addition to previously mentioned undervoltage stages. Depending on your choice, set address 3771 **U1<(<)** to ***ON***, ***OFF***, ***Alarm Only*** or ***U<Alarm U<<Trip***.

Basically, the same considerations apply as for the other undervoltage stages. Especially in case of stability problems, the positive sequence system is advantageous, since the positive sequence system is relevant for the limit of the stable energy transmission.

To achieve the two-stage condition, the **U1<** stage (address 3772) is combined with a greater time delay **T U1<** (address 3773), and the **U1<<** stage (address **U1<<**) with a shorter time delay T**T U1<<** (address 3775).

Note that the positive sequence system is calculated according to its defining equation

$U_1 = {}^1\!/_3 \cdot |\underline{U}_{L1} + \underline{a} \cdot \underline{U}_{L2} + \underline{a}^2 \cdot \underline{U}_{L3}|$. For symmetrical voltages this is equivalent to a phase-to-earth voltage.

The dropout to pickup ratio **U1<(<) RESET** can be set in address 3779. This parameter can only be altered in DIGSI at Display **Additional Settings**.

If the voltage transformers are located on the line side, the measuring voltages will be missing when the line is disconnected. To avoid that the undervoltage levels in these cases are or remain picked up, the current criterion **CURR. SUP. U1<** (address 3778) is switched ***ON***. With busbar side voltage transformers it can be switched ***OFF***. However, if the busbar is dead, the undervoltage protection will pick up and expire and then remain in a pickedup state. It must therefore be ensured in such cases that the protection is blocked by a binary input.

If the 7VK61 is operated without current transformer connection, the current criterion is of no use and associated parameters are hidden.

2.5.4 Settings

Addresses which have an appended “A” can only be changed with DIGSI, under “Additional Settings”.

Addr.	Parameter	Setting Options	Default Setting	Comments
3701	Uph-e>(>)	OFF Alarm Only ON U>Alarm U>>Trip	OFF	Operating mode Uph-e overvoltage prot.
3702	Uph-e>	1.0 .. 170.0 V	85.0 V	Uph-e> Pickup
3703	T Uph-e>	0.00 .. 100.00 sec	2.00 sec	T Uph-e> Time Delay
3704	Uph-e>>	1.0 .. 170.0 V	100.0 V	Uph-e>> Pickup
3705	T Uph-e>>	0.00 .. 100.00 sec	1.00 sec	T Uph-e>> Time Delay
3709A	Uph-e>(>) RESET	0.30 .. 0.99	0.98	Uph-e>(>) Reset ratio
3711	Uph-ph>(>)	OFF Alarm Only ON U>Alarm U>>Trip	OFF	Operating mode Uph-ph overvoltage prot.
3712	Uph-ph>	2.0 .. 220.0 V	150.0 V	Uph-ph> Pickup
3713	T Uph-ph>	0.00 .. 100.00 sec	2.00 sec	T Uph-ph> Time Delay
3714	Uph-ph>>	2.0 .. 220.0 V	175.0 V	Uph-ph>> Pickup
3715	T Uph-ph>>	0.00 .. 100.00 sec	1.00 sec	T Uph-ph>> Time Delay

Addr.	Parameter	Setting Options	Default Setting	Comments
3719A	Uphph>(>) RESET	0.30 .. 0.99	0.98	Uph-ph>(>) Reset ratio
3721	3U0>(>) (or Ux)	OFF Alarm Only ON U>Alarm U>>Trip	OFF	Operating mode 3U0 (or Ux) over-voltage
3722	3U0>	1.0 .. 220.0 V	30.0 V	3U0> Pickup (or Ux>)
3723	T 3U0>	0.00 .. 100.00 sec	2.00 sec	T 3U0> Time Delay (or T Ux>)
3724	3U0>>	1.0 .. 220.0 V	50.0 V	3U0>> Pickup (or Ux>>)
3725	T 3U0>>	0.00 .. 100.00 sec	1.00 sec	T 3U0>> Time Delay (or T Ux>>)
3728A	3U0>(>) Stabil.	ON OFF	ON	3U0>(>): Stabilization 3U0-Measurement
3729A	3U0>(>) RESET	0.30 .. 0.99	0.95	3U0>(>) Reset ratio (or Ux)
3731	U1>(>)	OFF Alarm Only ON U>Alarm U>>Trip	OFF	Operating mode U1 overvoltage prot.
3732	U1>	2.0 .. 220.0 V	150.0 V	U1> Pickup
3733	T U1>	0.00 .. 100.00 sec	2.00 sec	T U1> Time Delay
3734	U1>>	2.0 .. 220.0 V	175.0 V	U1>> Pickup
3735	T U1>>	0.00 .. 100.00 sec	1.00 sec	T U1>> Time Delay
3739A	U1>(>) RESET	0.30 .. 0.99	0.98	U1>(>) Reset ratio
3741	U2>(>)	OFF Alarm Only ON U>Alarm U>>Trip	OFF	Operating mode U2 overvoltage prot.
3742	U2>	2.0 .. 220.0 V	30.0 V	U2> Pickup
3743	T U2>	0.00 .. 100.00 sec	2.00 sec	T U2> Time Delay
3744	U2>>	2.0 .. 220.0 V	50.0 V	U2>> Pickup
3745	T U2>>	0.00 .. 100.00 sec	1.00 sec	T U2>> Time Delay
3749A	U2>(>) RESET	0.30 .. 0.99	0.98	U2>(>) Reset ratio
3751	Uph-e<(<)	OFF Alarm Only ON U<Alarm U<<Trip	OFF	Operating mode Uph-e under-voltage prot.
3752	Uph-e<	1.0 .. 100.0 V	30.0 V	Uph-e< Pickup
3753	T Uph-e<	0.00 .. 100.00 sec	2.00 sec	T Uph-e< Time Delay
3754	Uph-e<<	1.0 .. 100.0 V	10.0 V	Uph-e<< Pickup
3755	T Uph-e<<	0.00 .. 100.00 sec	1.00 sec	T Uph-e<< Time Delay
3758	CURR.SUP. Uphe<	ON OFF	ON	Current supervision (Uph-e)
3759A	Uph-e<(<) RESET	1.01 .. 1.20	1.05	Uph-e<(<) Reset ratio
3761	Uph-ph<(<)	OFF Alarm Only ON U<Alarm U<<Trip	OFF	Operating mode Uph-ph under-voltage prot.
3762	Uph-ph<	1.0 .. 175.0 V	50.0 V	Uph-ph< Pickup
3763	T Uph-ph<	0.00 .. 100.00 sec	2.00 sec	T Uph-ph< Time Delay

Addr.	Parameter	Setting Options	Default Setting	Comments
3764	Uph-ph<<	1.0 .. 175.0 V	17.0 V	Uph-ph<< Pickup
3765	T Uphph<<	0.00 .. 100.00 sec	1.00 sec	T Uph-ph<< Time Delay
3768	CURR.SUP.Uphph<	ON OFF	ON	Current supervision (Uph-ph)
3769A	Uphph<(<) RESET	1.01 .. 1.20	1.05	Uph-ph<(<) Reset ratio
3771	U1<(<)	OFF Alarm Only ON U<Alarm U<<Trip	OFF	Operating mode U1 undervoltage prot.
3772	U1<	1.0 .. 100.0 V	30.0 V	U1< Pickup
3773	T U1<	0.00 .. 100.00 sec	2.00 sec	T U1< Time Delay
3774	U1<<	1.0 .. 100.0 V	10.0 V	U1<< Pickup
3775	T U1<<	0.00 .. 100.00 sec	1.00 sec	T U1<< Time Delay
3778	CURR.SUP.U1<	ON OFF	ON	Current supervision (U1)
3779A	U1<(<) RESET	1.01 .. 1.20	1.05	U1<(<) Reset ratio

2.5.5 Information List

No.	Information	Type of Information	Comments
234.2100	U<, U> blk	IntSP	U<, U> blocked via operation
10201	>Uph-e>(>) BLK	SP	>BLOCK Uph-e>(>) Overvolt. (phase-earth)
10202	>Uph-ph>(>) BLK	SP	>BLOCK Uph-ph>(>) Overvolt (phase-phase)
10203	>3U0>(>) BLK	SP	>BLOCK 3U0>(>) Overvolt. (zero sequence)
10204	>U1>(>) BLK	SP	>BLOCK U1>(>) Overvolt. (positive seq.)
10205	>U2>(>) BLK	SP	>BLOCK U2>(>) Overvolt. (negative seq.)
10206	>Uph-e<(<) BLK	SP	>BLOCK Uph-e<(<) Undervolt (phase-earth)
10207	>Uphph<(<) BLK	SP	>BLOCK Uphph<(<) Undervolt (phase-phase)
10208	>U1<(<) BLK	SP	>BLOCK U1<(<) Undervolt (positive seq.)
10215	Uph-e>(>) OFF	OUT	Uph-e>(>) Overvolt. is switched OFF
10216	Uph-e>(>) BLK	OUT	Uph-e>(>) Overvolt. is BLOCKED
10217	Uph-ph>(>) OFF	OUT	Uph-ph>(>) Overvolt. is switched OFF
10218	Uph-ph>(>) BLK	OUT	Uph-ph>(>) Overvolt. is BLOCKED
10219	3U0>(>) OFF	OUT	3U0>(>) Overvolt. is switched OFF
10220	3U0>(>) BLK	OUT	3U0>(>) Overvolt. is BLOCKED
10221	U1>(>) OFF	OUT	U1>(>) Overvolt. is switched OFF
10222	U1>(>) BLK	OUT	U1>(>) Overvolt. is BLOCKED
10223	U2>(>) OFF	OUT	U2>(>) Overvolt. is switched OFF
10224	U2>(>) BLK	OUT	U2>(>) Overvolt. is BLOCKED
10225	Uph-e<(<) OFF	OUT	Uph-e<(<) Undervolt. is switched OFF
10226	Uph-e<(<) BLK	OUT	Uph-e<(<) Undervolt. is BLOCKED
10227	Uph-ph<(<) OFF	OUT	Uph-ph<(<) Undervolt. is switched OFF
10228	Uph-ph<(<) BLK	OUT	Uphph<(<) Undervolt. is BLOCKED
10229	U1<(<) OFF	OUT	U1<(<) Undervolt. is switched OFF
10230	U1<(<) BLK	OUT	U1<(<) Undervolt. is BLOCKED

No.	Information	Type of Information	Comments
10231	U</> ACTIVE	OUT	Over-/Under-Voltage protection is ACTIVE
10240	Uph-e> Pickup	OUT	Uph-e> Pickup
10241	Uph-e>> Pickup	OUT	Uph-e>> Pickup
10242	Uph-e>(>) PU L1	OUT	Uph-e>(>) Pickup L1
10243	Uph-e>(>) PU L2	OUT	Uph-e>(>) Pickup L2
10244	Uph-e>(>) PU L3	OUT	Uph-e>(>) Pickup L3
10245	Uph-e> TimeOut	OUT	Uph-e> TimeOut
10246	Uph-e>> TimeOut	OUT	Uph-e>> TimeOut
10247	Uph-e>(>) TRIP	OUT	Uph-e>(>) TRIP command
10248	Uph-e> PU L1	OUT	Uph-e> Pickup L1
10249	Uph-e> PU L2	OUT	Uph-e> Pickup L2
10250	Uph-e> PU L3	OUT	Uph-e> Pickup L3
10251	Uph-e>> PU L1	OUT	Uph-e>> Pickup L1
10252	Uph-e>> PU L2	OUT	Uph-e>> Pickup L2
10253	Uph-e>> PU L3	OUT	Uph-e>> Pickup L3
10255	Uphph> Pickup	OUT	Uph-ph> Pickup
10256	Uphph>> Pickup	OUT	Uph-ph>> Pickup
10257	Uphph>(>)PU L12	OUT	Uph-ph>(>) Pickup L1-L2
10258	Uphph>(>)PU L23	OUT	Uph-ph>(>) Pickup L2-L3
10259	Uphph>(>)PU L31	OUT	Uph-ph>(>) Pickup L3-L1
10260	Uphph> TimeOut	OUT	Uph-ph> TimeOut
10261	Uphph>> TimeOut	OUT	Uph-ph>> TimeOut
10262	Uphph>(>) TRIP	OUT	Uph-ph>(>) TRIP command
10263	Uphph> PU L12	OUT	Uph-ph> Pickup L1-L2
10264	Uphph> PU L23	OUT	Uph-ph> Pickup L2-L3
10265	Uphph> PU L31	OUT	Uph-ph> Pickup L3-L1
10266	Uphph>> PU L12	OUT	Uph-ph>> Pickup L1-L2
10267	Uphph>> PU L23	OUT	Uph-ph>> Pickup L2-L3
10268	Uphph>> PU L31	OUT	Uph-ph>> Pickup L3-L1
10270	3U0> Pickup	OUT	3U0> Pickup
10271	3U0>> Pickup	OUT	3U0>> Pickup
10272	3U0> TimeOut	OUT	3U0> TimeOut
10273	3U0>> TimeOut	OUT	3U0>> TimeOut
10274	3U0>(>) TRIP	OUT	3U0>(>) TRIP command
10280	U1> Pickup	OUT	U1> Pickup
10281	U1>> Pickup	OUT	U1>> Pickup
10282	U1> TimeOut	OUT	U1> TimeOut
10283	U1>> TimeOut	OUT	U1>> TimeOut
10284	U1>(>) TRIP	OUT	U1>(>) TRIP command
10290	U2> Pickup	OUT	U2> Pickup
10291	U2>> Pickup	OUT	U2>> Pickup
10292	U2> TimeOut	OUT	U2> TimeOut
10293	U2>> TimeOut	OUT	U2>> TimeOut
10294	U2>(>) TRIP	OUT	U2>(>) TRIP command
10300	U1< Pickup	OUT	U1< Pickup

No.	Information	Type of Information	Comments
10301	U1<< Pickup	OUT	U1<< Pickup
10302	U1< TimeOut	OUT	U1< TimeOut
10303	U1<< TimeOut	OUT	U1<< TimeOut
10304	U1<(<) TRIP	OUT	U1<(<) TRIP command
10310	Uph-e< Pickup	OUT	Uph-e< Pickup
10311	Uph-e<< Pickup	OUT	Uph-e<< Pickup
10312	Uph-e<(<) PU L1	OUT	Uph-e<(<) Pickup L1
10313	Uph-e<(<) PU L2	OUT	Uph-e<(<) Pickup L2
10314	Uph-e<(<) PU L3	OUT	Uph-e<(<) Pickup L3
10315	Uph-e< TimeOut	OUT	Uph-e< TimeOut
10316	Uph-e<< TimeOut	OUT	Uph-e<< TimeOut
10317	Uph-e<(<) TRIP	OUT	Uph-e<(<) TRIP command
10318	Uph-e< PU L1	OUT	Uph-e< Pickup L1
10319	Uph-e< PU L2	OUT	Uph-e< Pickup L2
10320	Uph-e< PU L3	OUT	Uph-e< Pickup L3
10321	Uph-e<< PU L1	OUT	Uph-e<< Pickup L1
10322	Uph-e<< PU L2	OUT	Uph-e<< Pickup L2
10323	Uph-e<< PU L3	OUT	Uph-e<< Pickup L3
10325	Uph-ph< Pickup	OUT	Uph-ph< Pickup
10326	Uph-ph<< Pickup	OUT	Uph-ph<< Pickup
10327	Uphph<(<)PU L12	OUT	Uphph<(<) Pickup L1-L2
10328	Uphph<(<)PU L23	OUT	Uphph<(<) Pickup L2-L3
10329	Uphph<(<)PU L31	OUT	Uphph<(<) Pickup L3-L1
10330	Uphph< TimeOut	OUT	Uphph< TimeOut
10331	Uphph<< TimeOut	OUT	Uphph<< TimeOut
10332	Uphph<(<) TRIP	OUT	Uphph<(<) TRIP command
10333	Uphph< PU L12	OUT	Uph-ph< Pickup L1-L2
10334	Uphph< PU L23	OUT	Uph-ph< Pickup L2-L3
10335	Uphph< PU L31	OUT	Uph-ph< Pickup L3-L1
10336	Uphph<< PU L12	OUT	Uph-ph<< Pickup L1-L2
10337	Uphph<< PU L23	OUT	Uph-ph<< Pickup L2-L3
10338	Uphph<< PU L31	OUT	Uph-ph<< Pickup L3-L1

2.6 Circuit breaker failure protection (optional)

The circuit breaker failure protection provides rapid back-up fault clearance in the event that the circuit breaker fails to respond to a trip command from a protection function of the local circuit breaker.

2.6.1 Functional Description

General

Whenever e.g. a short-circuit protection relay of a feeder issues a trip command to the circuit breaker, this is repeated to the circuit breaker failure protection (*Figure 2-31*). A timer T–BF in the circuit breaker failure protection is started. The timer runs as long as a trip command is present and current continues to flow through the circuit breaker poles.

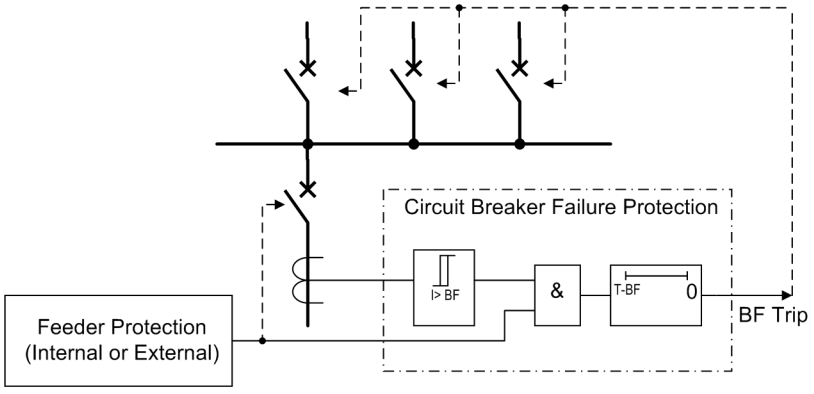

[funktionsschema-lvs-ueberwach-wlk-010802, 1, en_GB]

Figure 2-31 Simplified function diagram of circuit breaker failure protection with current flow monitoring

Normally, the circuit breaker will open and interrupt the fault current. The current monitoring stage quickly resets (typical 10 ms) and stops the timer T–BF.

If the trip command is not carried out (circuit breaker failure case), current continues to flow and the timer runs to its set limit. The circuit breaker failure protection then issues a command to trip the backup circuit breakers and interrupt the fault current.

The reset time of the feeder protection is not relevant because the circuit breaker failure protection itself recognizes the interruption of the current.

For protection functions where the tripping criterion is not dependent on current (e.g. Buchholz protection), current flow is not a reliable criterion for proper operation of the circuit breaker. In such cases, the circuit breaker position can be derived from the auxiliary contacts of the circuit breaker. Therefore, instead of monitoring the current, the position of the auxiliary contacts is monitored (*Figure 2-32*). For this purpose, the outputs from the auxiliary contacts must be fed to binary inputs on the relay (refer also to Section *2.8.1 Function Control*).

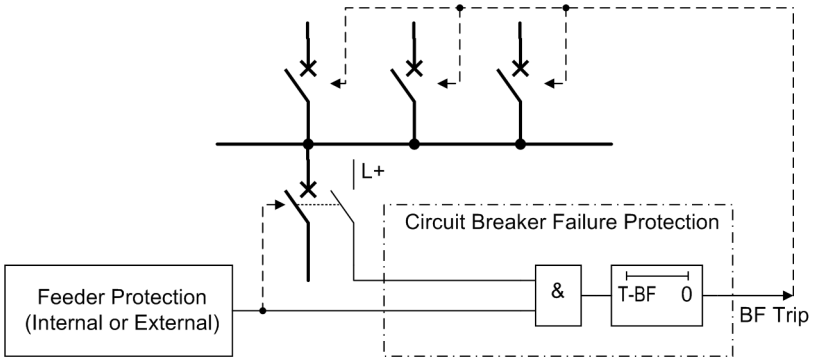

[funktionsschema-lvs-lshiko-wlk-010802, 1, en_GB]

Figure 2-32 Simplified function diagram of circuit breaker failure protection controlled by circuit breaker auxiliary contact

Current flow monitoring

Each of the phase currents and an additional plausibility current (see below) are filtered by numerical filter algorithms so that only the fundamental component is used for further evaluation.

Special features recognize the instant of current interruption. In case of sinusoidal currents the current interruption is detected after approximately a $^3/_4$ cycle. With aperiodic DC current components in the fault current and/or in the current transformer secondary circuit after interruption (e.g. current transformers with linearized core), or saturation of the current transformers caused by the DC component in the fault current, it can take up to 1 $^1/_4$ AC cycles before the interruption of the primary current is reliably detected.

The currents are monitored and compared with the set limit value. Besides the three phase currents, two further current thresholds are provided in order to allow a plausibility check. If configured correspondingly, a separate threshold value can be used for this plausibility check (see *Figure 2-33*).

The earth current I_E ($3 \cdot I_0$) is preferably used as plausibility current. The earth current from the starpoint of the current transformer set will be used if it is connected to the device. If this current is not available, the device will calculate it from the phase currents using this formula:

$$3 \cdot \underline{I}_0 = \underline{I}_{L1} + \underline{I}_{L2} + \underline{I}_{L3}$$

Additionally, the value calculated by 7VK61 of three times the negative sequence current $3 \cdot I_2$ is used for plausibility check. This is calculated according to the equation:

$$3 \cdot \underline{I}_2 = \underline{I}_{L1} + \underline{a}^2 \cdot \underline{I}_{L2} + \underline{a} \cdot \underline{I}_{L3}$$

mit

$$\underline{a} = e^{j120°}.$$

These plausibility currents do not have any direct influence on the basic functionality of the circuit breaker failure protection but they allow a plausibility check in that at least two current thresholds must have been exceeded before any of the circuit breaker failure delay times can be started, thus providing high security against false operation.

In case of high-resistance earth faults it may occur that the earth current exceeds the sensitively parameterized threshold value **3I0> BF** (address 3912), the phase current involved in the short-circuit, however, does not exceed the threshold value **I> BF** (address 3902).The plausibility monitoring would prevent the breaker failure protection from being initiated. In this case the pickup threshold of the phase current monitoring **I> BF** can be switched over to the threshold value **3I0> BF**. For this purpose, use the binary input 1404 *>BFactivate3I0>*. This binary input is linked to an external signal which indicates a high resistance fault, e.g. earth fault detection, or detection of displacement voltage. With this method, the more sensitively parameterized earth current threshold is also used for the phase current monitoring (*Figure 2-33*).

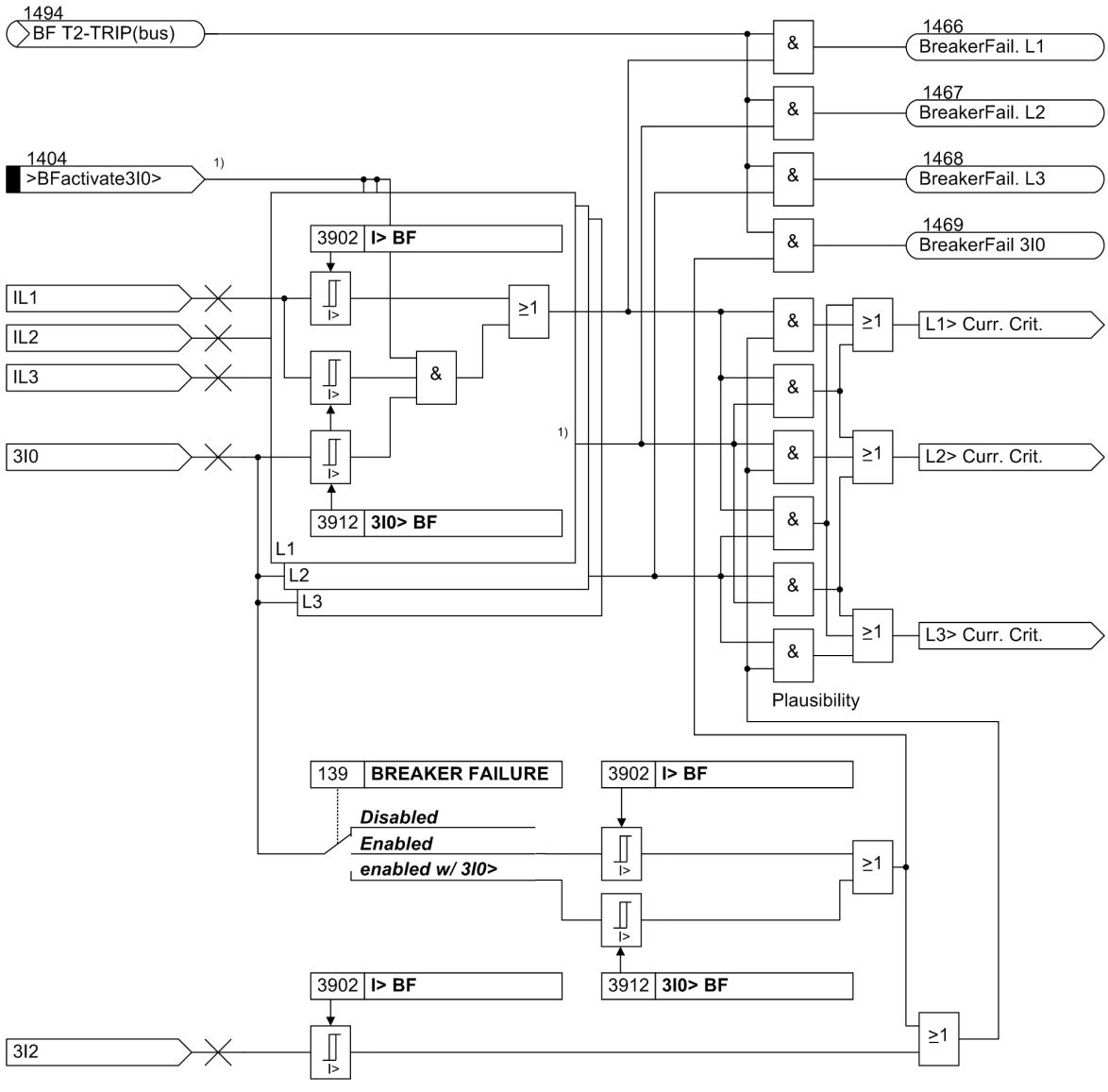

[logik-strmflsueberw-plausibilitaet-110113, 1, en_GB]

Figure 2-33 Current flow monitoring with plausibility currents $3{\cdot}I_0$ and $3{\cdot}I_2$

1) only available/visible if 139 is set to ***enabled w/ 3I0>***

Monitoring the circuit breaker auxiliary contacts

It is the central function control of the device that informs the circuit breaker failure protection on the position of the circuit breaker (see Section *2.8.1 Function Control*). The evaluation of the circuit breaker auxiliary contacts is carried out in the circuit breaker failure protection function only when the current flow monitoring has not picked up. Once the current flow criterion has picked up during the trip signal from the feeder protection, the circuit breaker is assumed to be open as soon as the current disappears, even if the associated auxiliary contact does not (yet) indicate that the circuit breaker has opened (*Figure 2-34*). This gives preference to the more reliable current criterion and avoids overfunctioning due to a defect e.g. in the auxiliary contact mechanism or circuit. This interlock feature is provided for each individual phase as well as for 3-pole tripping.

It is possible to disable the auxiliary contact criterion. If you set the parameter switch **Chk BRK CONTACT** (*Figure 2-36* top) to ***NO*** the circuit breaker failure protection can only be started when current flow is detected. The position of the auxiliary contacts is then not evaluated even if the auxiliary contacts are connected to the device.

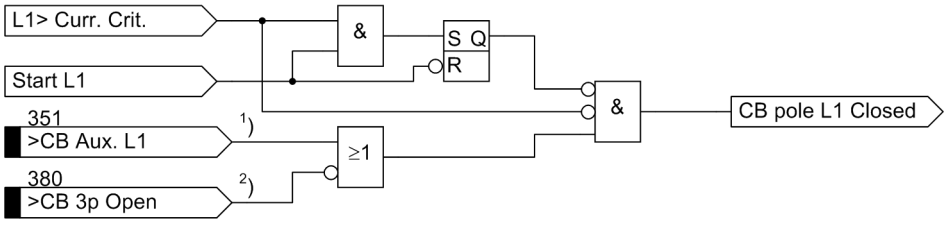

[logik-verriegel-hikos-wlk-010802, 1, en_GB]

Figure 2-34 Interlock of the auxiliary contact criterion - example for phase L1

1) if phase-segregated auxiliary contacts are available

2) if series-connected NC contacts are available

On the other hand, current flow is not a reliable criterion for proper operation of the circuit breaker for faults which do not cause detectable current flow (e.g. Buchholz protection). Information regarding the position of the circuit breaker auxiliary contacts is required in these cases to check the correct response of the circuit breaker. For this purpose, the binary input *>BF Start w/o I* No. 1439 (*Figure 2-36* left). This input initiates the circuit breaker failure protection even if no current flow is detected.

Common phase initiation

Common phase initiation is used, for example, in systems with only 3-pole tripping, for transformer feeders, or if the busbar protection trips. It is the only available initiation mode when using the 7VK61 version capable of 3- pole tripping only.

If the circuit breaker failure protection is intended to be initiated by further external protection devices, it is recommended, for security reasons, to connect two binary inputs to the device. Besides the trip command of the external protection to the binary input *>BF Start 3pole* No. 1415 it is recommended to connect also the general device pickup to binary input *>BF release* No. 1432. For Buchholz protection it is recommended that both inputs are connected to the device by two separate wire pairs.

Nevertheless, it is possible to initiate the circuit breaker failure protection in single-channel mode should a separate release criterion not be available. The binary input *>BF release* (No. 1432) must then not be assigned to any physical input of the device during configuration.

Figure 2-36 shows the operating principle. When the trip signal appears from any internal or external feeder protection and at least one current flow criterion according to *Figure 2-33* is present, the circuit breaker failure protection is initiated and the corresponding delay time(s) is (are) started.

If the current criterion is not fulfilled for any of the phases, the position of the circuit breaker auxiliary contact can be queried as shown in *Figure 2-35*. If the circuit breaker poles have individual auxiliary contacts, the series connection of the three normally closed (NC) auxiliary contacts is used. After a 3-pole trip command the circuit breaker has only operated correctly if no current is flowing via any phase or alternatively all three auxiliary contacts indicate the CB is open.

Figure 2-35 illustrates how the internal signal “CB pole ≥L1 closed” is created (see *Figure 2-36* left) if at least one circuit breaker pole is closed.

By means of the binary input 1424 *>BF STARTonlyT2*, the tripping delay 3906 **T2** can be started. After this time stage has elapsed, the circuit breaker failure TRIP command 1494 *BF T2-TRIP(bus)* is issued.

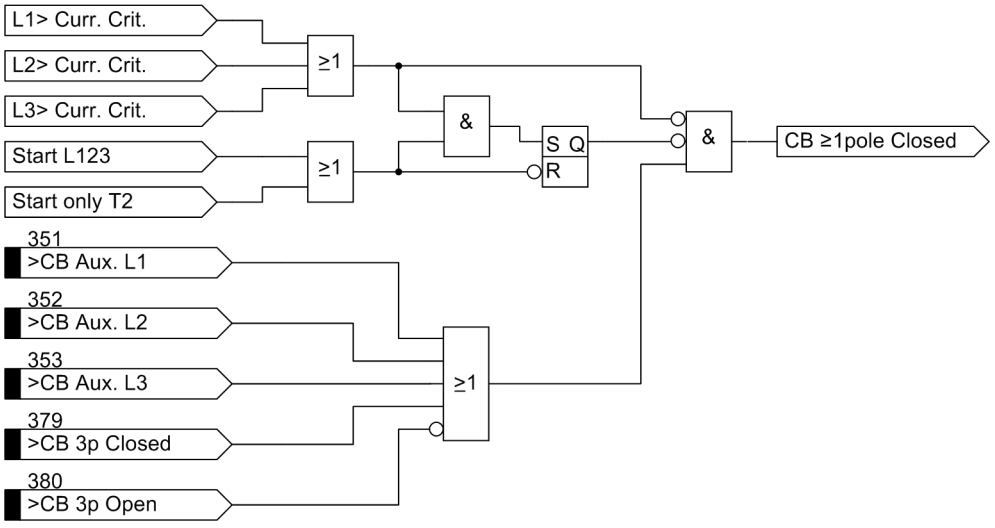

[logik-entsteh-signal-ls-hiko-wlk-010802, 1, en_GB]

Figure 2-35 Creation of signal "CB ≥ any pole closed"

If an internal protection function or an external protection device trips without current flow, the circuit breaker failure protection is initiated by the internal input "Start internal w/o I", if the trip signal comes from the internal voltage protection or frequency protection, or by the external input *>BF Start w/o I*. In this case the start signal is maintained until the circuit breaker is reported to be open by the auxiliary contact criterion.

Initiation can be blocked via the binary input*>BLOCK BkrFail* (e.g. during test of the feeder protection relay).

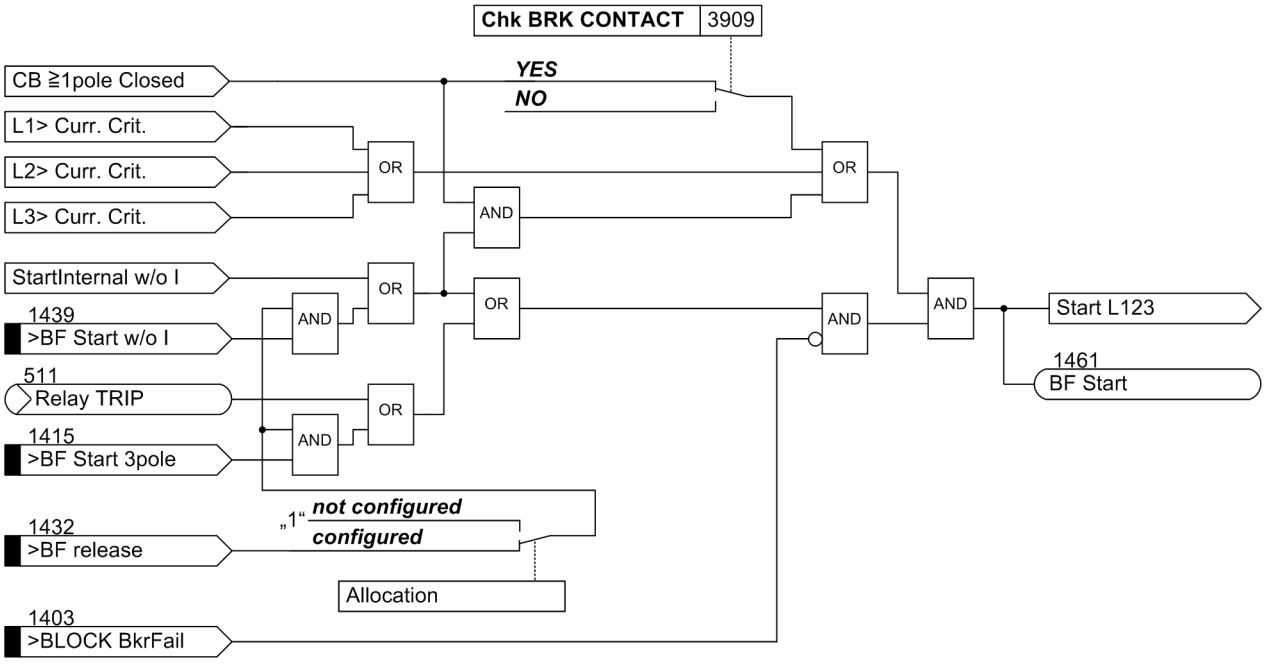

[logik-svs-phasengem-anwurf-wlk-010802, 1, en_GB]

Figure 2-36 Breaker failure protection with common phase initiation

Phase-segregated initiation

Phase segregated initiation of the circuit breaker failure protection is necessary if the circuit breaker poles are operated individually, e.g. if 1-pole automatic reclosure is used. This is possible if the device is able to trip 1-pole.

If the circuit breaker failure protection is intended to be initiated by further external protection devices, it is recommended, for security reasons, to connect two binary inputs to the device. Besides the three trip commands of the external relay to the binary input *>BF Start L1*, *>BF Start L2* and *>BF Start L3* it is recommended to connect also, for example, the general device pickup to binary input *>BF release*. *Figure 2-37* shows this connection.

Nevertheless, it is possible to initiate the circuit breaker failure protection in single-channel mode should a separate release criterion not be available. The binary input *>BF release* must then not be assigned to any physical input of the device during configuration.

If the external protection device does not provide a general fault detection signal, a general trip signal can be used instead. Alternatively, the parallel connection of a separate set of trip contacts can produce such a release signal as shown in *Figure 2-38*.

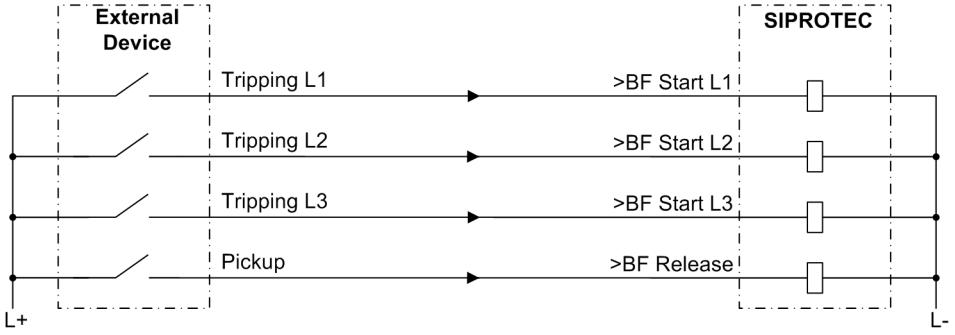

[svs-phasegetr-anwurf-ext-geraet-wlk-010802, 1, en_GB]

Figure 2-37 Breaker failure protection with phase segregated initiation — example for initiation by an external protection device with release by a fault detection signal

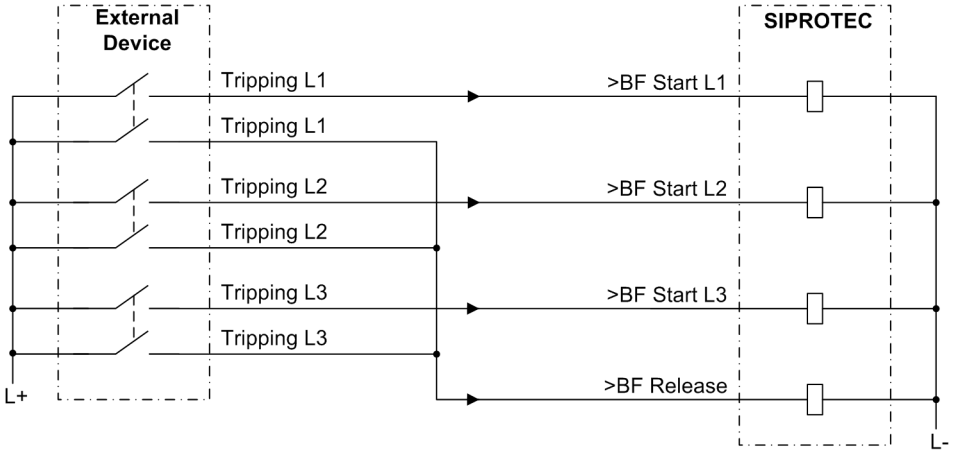

[svs-phasegetr-anwurf-ext-geraet-frei-ausloese-wlk-010802, 1, en_GB]

Figure 2-38 Schalterversagerschutz mit phasengetrenntem Anwurf — Beispiel für Anwurf von externem Schutzgerät mit Freigabe durch einen getrennten Satz Auslösekontakte

In principle, the starting condition logic for the delay time(s) is designed similar to that for the common phase initiation, however, individually for each of the three phases (as shown in *Figure 2-39*). Thus, current and initiation conditions are processed for each CB pole. Also during a 1-pole automatic reclosure, the current interruption is reliably monitored for the tripped CB pole only.

Initiation of an individual phase, e.g. “Start L1”, is only valid if the starting signal (= tripping signal of the feeder protection) appears for this phase and if the current criterion is met for at least this phase. If it is not met, the circuit breaker auxiliary contact can be interrogated according to *Figure 2-34* – if parameterised (**Chk BRK CONTACT** = ***YES***).

The auxiliary contact criterion is also processed for each individual circuit breaker pole. If, however, the circuit breaker auxiliary contacts are not available for each individual circuit breaker pole, then a 1-pole trip command is assumed to be executed only if the series connection of the normally open (NO) auxiliary

contacts is interrupted. This information is provided to the circuit breaker failure protection by the central function control of the device (refer to Section *2.8.1 Function Control*).

The 3-phase starting signal “Start L123” is generated if there are start signals for more than one phase. The input "BF Start w/o I" (e.g. from Buchholz protection) operates only in 3-phase mode. The function is the same as with common phase initiation.

The additional release-signal *>BF release* (if assigned to a binary input) affects all external initiation conditions. Initiation can be blocked via the binary input *>BLOCK BkrFail* (e.g. during test of the feeder protection relay).

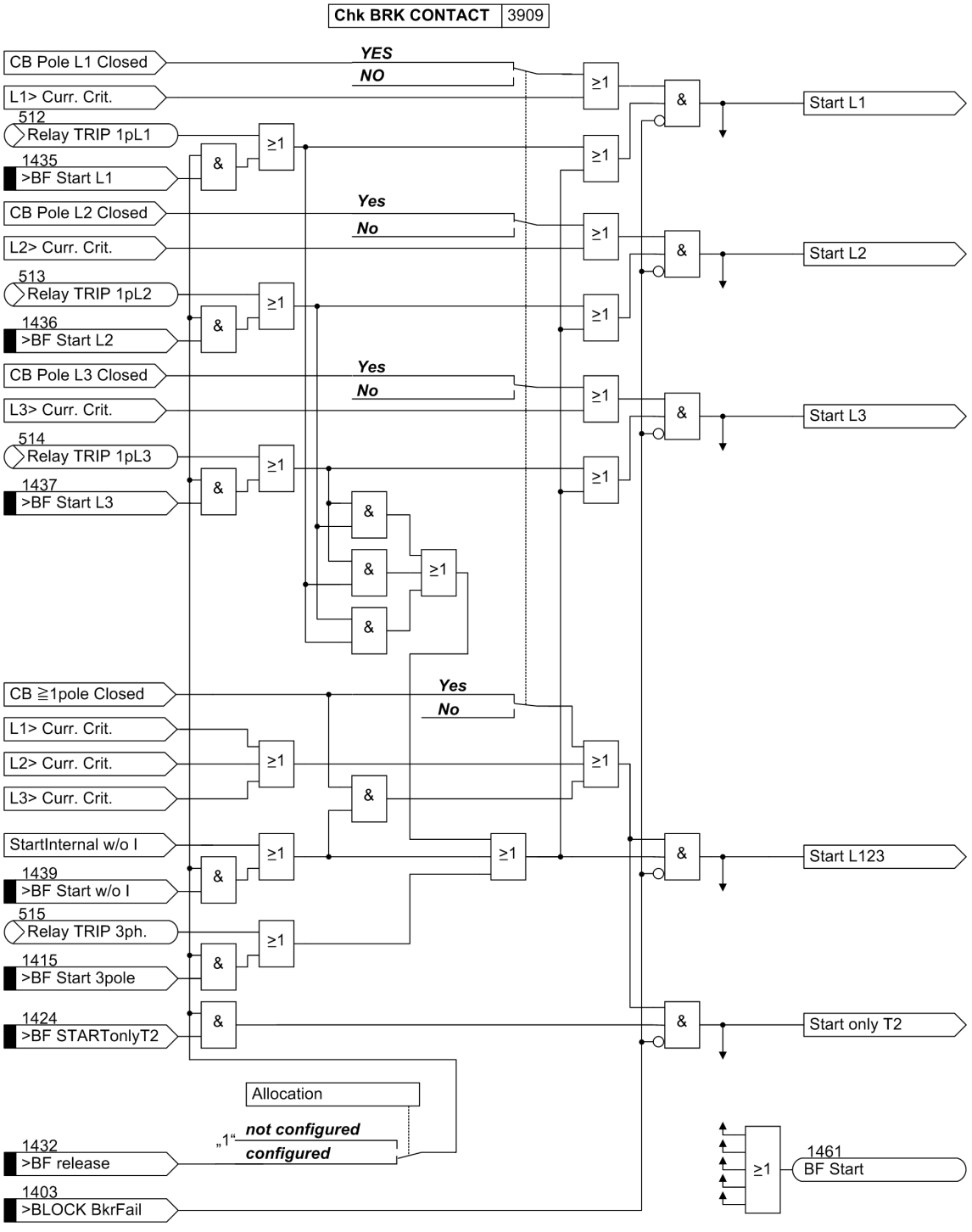

[logik-7vk61-anwurfbed-1-pol-ausloese, 1, en_GB]

Figure 2-39 Initiation conditions for single-pole trip commands

Delay times

When the initiatiation conditions are fulfilled, the associated timers are started. The circuit breaker pole(s) must open before the associated time has elapsed.

Different delay times are possible for 1-pole and 3-pole initiation. An additional delay time can be used for twostage circuit breaker failure protection.

With single-stage circuit breaker failure protection, the trip command is relayed to the adjacent circuit breakers which interrupt the fault current if the local feeder breaker fails (see *Figure 2-31* and *Figure 2-32*). The adjacent circuit breakers are those located at the busbar or busbar section to which the feeder under consideration is connected. The possible initiation conditions for the circuit breaker failure protection are those discussed above. Depending on the application of the feeder protection, common phase or phase-segregated initiation conditions may occur. The circuit breaker failure protection always trips 3-pole.

The simplest solution is to start the delay timer **T2** (*Figure 2-40*). The phase-segregated initiation signals are omitted if the feeder protection always trips 3-pole or if the circuit breaker is not capable of 1-pole tripping.

If different delay times are required after a 1-pole trip or 3-pole trip it is possible to use the timer stages **T1-3pole** and **T1-1pole** according to *Figure 2-41*.

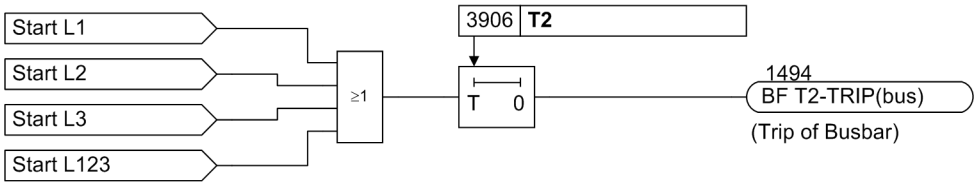

[logik-1-stufiger-svs-phgem-anwurf-wlk-010802, 1, en_GB]

Figure 2-40 Single-stage breaker failure protection with common phase initiation

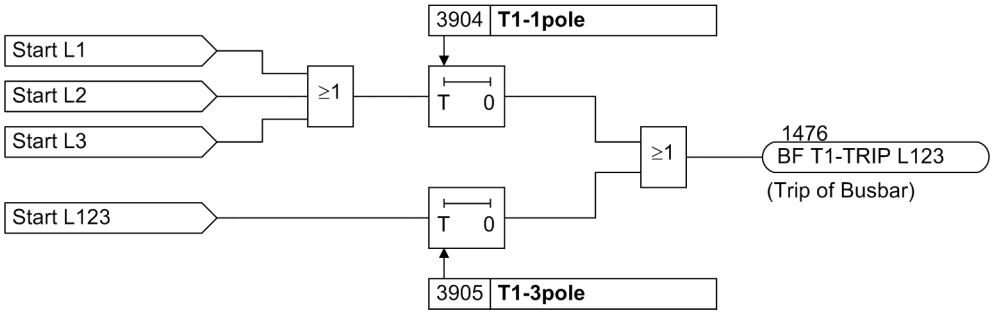

[logik-1-stufiger-svs-unterscht-verz-t-wlk-010802, 1, en_GB]

Figure 2-41 Single-stage breaker failure protection with different delay times

With two-stage circuit breaker failure protection the trip command of the feeder protection is usually repeated, after a first time stage, to the feeder circuit breaker, often via a second trip coil or set of trip coils, if the circuit breaker has not responded to the original trip command. A second time stage monitors the response to this repeated trip command and trips the circuit breakers of the relevant busbar section if the fault has not yet been cleared after this second time.

For the first stage, a different delay **T1-1pole** can be set for 1-pole trip than for 3-pole trip by the feeder protection. Additionally, you can select (by setting parameter **1p-RETRIP (T1)**) whether this repeated trip should be 1-pole or 3-pole. In case of a multi-pole tripping of the feeder protection, **T1-1pole** and **T1-3pole** are started simultaneously. By means of **T1-3pole**, the tripping of the circuit breaker failure protection can be accelerated in comparison to **T1-1pole**.

Address 3913 **T2StartCriteria** is used to set whether the delay time **T2** will be started after expiry of T1 (**T2StartCriteria** = ***With exp. of T1***) or simultaneously with it (**T2StartCriteria** = ***Parallel withT1***). The time **T2** can also be initiated via a separate binary input 1424 *>BF STARTonlyT2*.

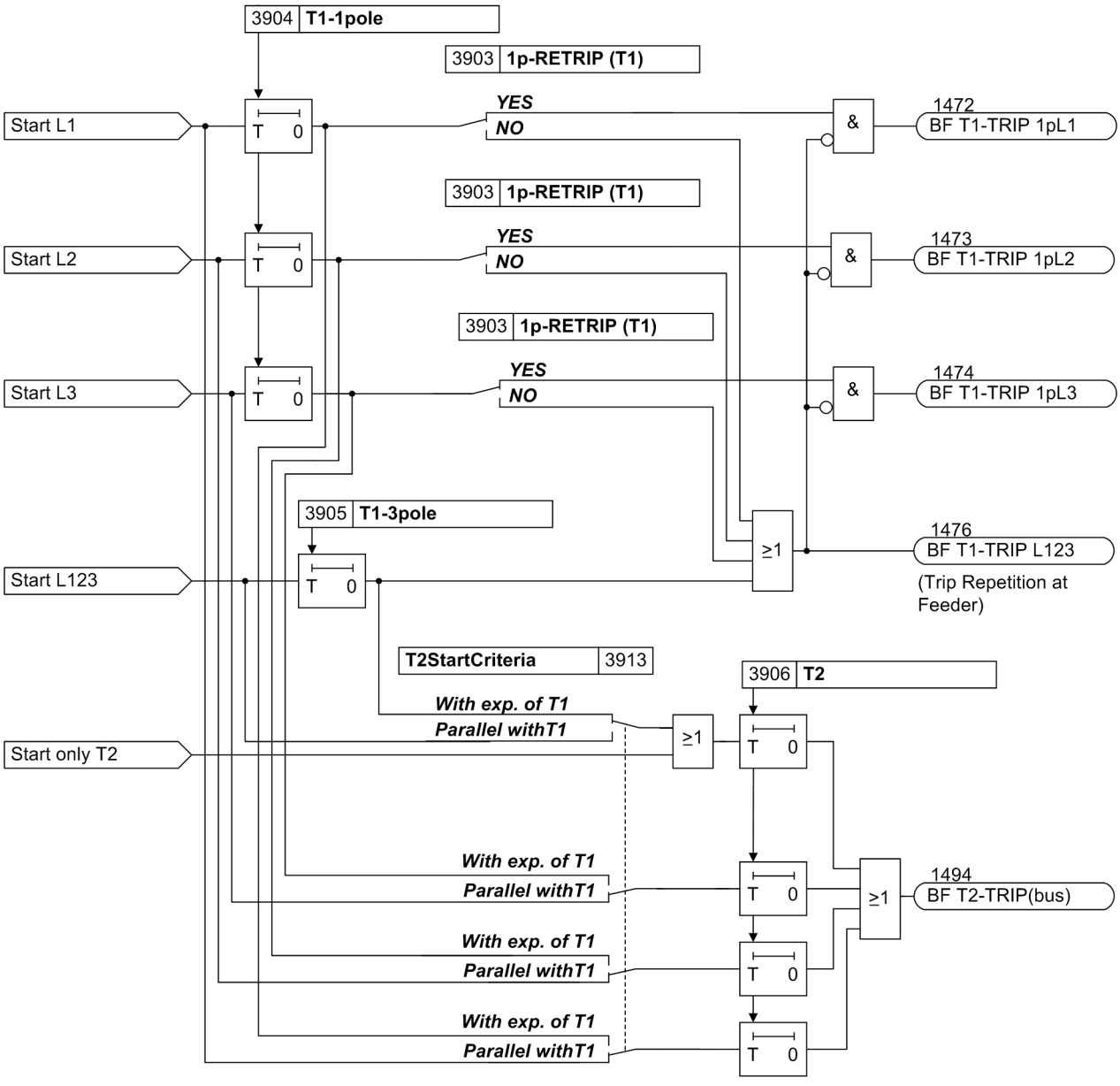

[logik-7vk61-2-stufiger-svs-phgem-anwurf, 1, en_GB]

Figure 2-42 Logic diagram of the two-stage breaker failure protection

Circuit breaker not operational

There may be cases when it is already obvious that the circuit breaker associated with a feeder protection relay cannot clear a fault, e.g. when the tripping voltage or the tripping energy is not available.

In such a case it is not necessary to wait for the response of the feeder circuit breaker. If provision has been made for the detection of such a condition (e.g. control voltage monitor or air pressure monitor), the monitor alarm signal can be fed to the binary input *>CB faulty* of the 7VK61. On occurrence of this alarm and a trip command by the feeder protection, a separate timer **T3-BkrDefective** is started (see *Figure 2-43*), which is normally set to 0. Thus, the adjacent circuit breakers (bus-bar) are tripped immediately in case the feeder circuit breaker is not operational.

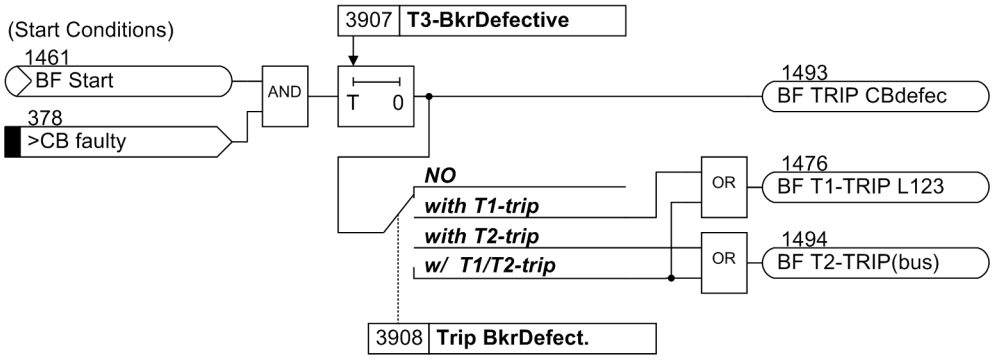

[logik-ls-gestoert-wlk-010802, 1, en_GB]

Figure 2-43 Circuit breaker faulty

Transfer trip to the remote end circuit breaker

The device has the facility to provide an additional intertrip signal to the circuit breaker at the remote line end in the event that the local feeder circuit breaker fails. For this, a suitable protection signal transmission link is required (e.g. via communication cable, power line carrier transmission, radio transmission, or optical fibre transmission).

To realise this intertrip, the desired command — usually the trip command which is intended to trip the adjacent circuit breakers — is assigned to a binary output of the device. The contact of this output triggers the transmission device.

End fault protection

An end fault is defined here as a short–circuit which has occurred at the end of a line or protected object, between the circuit breaker and the current transformer set.

Figure 2-44 shows the situation. The fault is located — as seen from the current transformer (= measurement location) — on the busbar side, it will thus not be regarded as a feeder fault by the feeder protection relay. It can only be detected by either a reverse stage of the feeder protection or by the busbar protection. However, a trip command given to the feeder circuit breaker does not clear the fault since the opposite end continues to feed the fault. Thus, the fault current does not stop flowing even though the feeder circuit breaker has properly responded to the trip command.

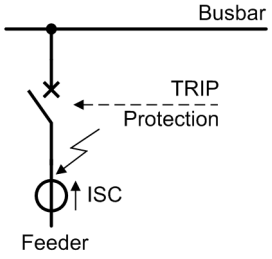

[endfehler-ls-strwdlr-wlk-010802, 1, en_GB]

Figure 2-44 End fault between circuit breaker and current transformers

The end fault protection has the task to recognize this situation and to transmit a trip signal to the remote end(s) of the protected object to clear the fault. For this purpose, the output command *BF EndFlt TRIP* is available to trigger a signal transmission device (e.g. power line carrier, radio wave, or optical fibre) — if applicable, together with other commands that need to be transferred.

The end fault is recognized when the current continues flowing although the circuit breaker auxiliary contacts indicate that the circuit breaker is open. An additional criterion is the presence of any circuit breaker failure protection initiate signal. *Figure 2-45* illustrates the functional principle. If the circuit breaker failure protection is initiated and current flow is detected (current criteria "L*> current criterion" according to *Figure 2-33*), but no circuit breaker pole is closed (auxiliary contact criterion "any pole closed"), then the timer **T-EndFault** is started. At the end of this time an intertrip signal is transmitted to the opposite end(s) of the protected object.

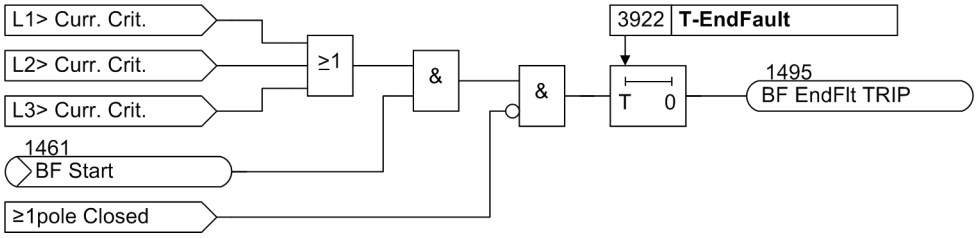

[funktionsschema-endfehlerschutz-wlk-010802, 1, en_GB]

Figure 2-45 Functional scheme of the end fault protection

Pole discrepancy supervision

The pole discrepancy supervision has the task to detect discrepancies in the position of the three circuit breaker poles. Under steady-state operating conditions, either all three poles of the circuit breaker must be closed, or all three poles must be open. Discrepancy is permitted only for a short time interval during a 1-pole automatic reclose cycle.

Figure 2-46 the functional principle. The signals which are processed here are the same as those used for the circuit breaker failure protection. The pole discrepancy condition is established when at least one pole is closed (" ≥ one pole closed") and at the same time not all three poles are closed (" ≥ one pole open").

Additionally, the current criteria (from *Figure 2-33*) are processed Pole discrepancy can only be detected when current is not flowing through all three poles, i.e. through only one or two poles. When current is flowing through all three poles, all three poles must be closed even if the circuit breaker auxiliary contacts indicate a different status.

Detection of the discrepancy of the CB poles is signaled phase-selective as "Pickup". The signal identifies the pole that was open before the trip command of the pole discrepancy supervision occurred.

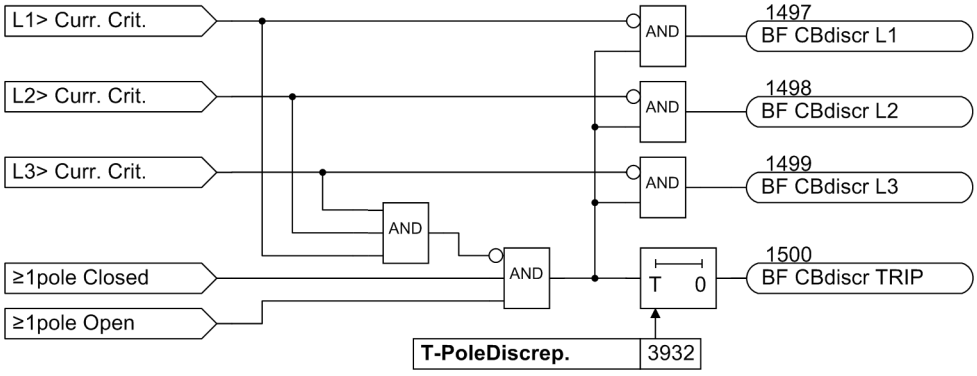

[logikschema-schalt-gleichlfueberwch-wlk-010802, 1, en_GB]

Figure 2-46 Function diagram of pole discrepancy supervision

2.6.2 Setting Notes

General

The circuit breaker failure protection and its ancillary functions (end fault protection, pole discrepancy supervision) can only operate if they were set during configuration of the scope of functions (address 139 **BREAKER FAILURE**) to ***Enabled*** or ***enabled w/ 3I0>***.

Circuit breaker failure protection

The circuit breaker failure protection is switched ***ON*** or ***OFF*** at address 3901 **FCT BreakerFail**.

The current threshold **I> BF** (address 3902) should be selected such that the protection will operate with the smallest expected short-circuit current. A setting of 10% below the minimum fault current for which circuit breaker failure protection must operate is recommended. On the other hand, the value should not be set lower than necessary.

If the circuit breaker failure protection is configured with zero sequence current threshold (address 139 = ***vorh. mit 3I0>***), the pickup threshold for the zero sequence current **3I0> BF** (address 3912) can be set independently of **I> BF**.

Normally, the circuit breaker failure protection evaluates the current flow criterion as well as the position of the circuit breaker auxiliary contact(s). If the auxiliary contact(s) status is not available in the device, this criterion cannot be processed. In this case, set address 3909 **Chk BRK CONTACT** to ***NO***.

Two-stage circuit breaker failure protection

With two-stage operation, the trip command is repeated after a time delay T1 to the local feeder circuit breaker, normally to a different set of trip coils of this circuit breaker. A choice can be made whether this trip repetition shall be 1-pole or 3-pole if the initial feeder protection trip was 1-pole (provided that 1-pole trip is possible). This choice is made in address 3903 **1p-RETRIP (T1)**. Set this parameter to ***YES*** if the first stage is to trip 1-pole, otherwise set it to ***NO***.

If the circuit breaker does not respond to this trip repetition, the adjacent circuit breakers are tripped after T2, i.e. the circuit breakers of the busbar or of the concerned busbar section and, if necessary, also the circuit breaker at the remote end unless the fault has been cleared.

Separate delay times can be set

- for 1- or 3-pole trip repetition to the local feeder circuit breaker after a **1**-pole trip of the feeder protection **T1-1pole** at address 3904,
- for 3-pole trip repetition to the local feeder circuit breaker after **3**-pole trip of the feeder protection **T1-3pole** (address 3905),
- for trip of the adjacent circuit breakers (busbar zone and remote end if applicable) **T2** at address 3906.

NOTE

In case of multi-phase tripping of the feeder protection, **T1-1pole** and **T1-3pole** are started in parallel. **T1-3pole** therefore allows accelerating the tripping of the breaker failure protection compared to **T1-1pole**. Therefore, you should set **T1-1pole** equal to or longer than **T1-3pole**.

The delay times are set dependant on the maximum operating time of the feeder circuit breaker and the reset time of the current detectors of the circuit breaker failure protection, plus a safety margin which allows for any tolerance of the delay timers. *Figure 2-47* illustrates the timing of a typical circuit breaker failure scenario. The dropout time for sinusoidal currents is ≤ 15 ms. If current transformer saturation is anticipated, the time should be set to 25 ms.

NOTE

If the breaker failure protection is to perform a single-pole TRIP repetition, the time set for the AR, address3408 **T-Start MONITOR**, has to be longer than the time set for address 3903 **1p-RETRIP (T1)** to prevent 3-pole coupling by the AR before **T1** expires.

To prevent AR after ***BF T2-TRIP(bus)***, the time 3408**T-Start MONITOR** can be set to expire together with **T2**.

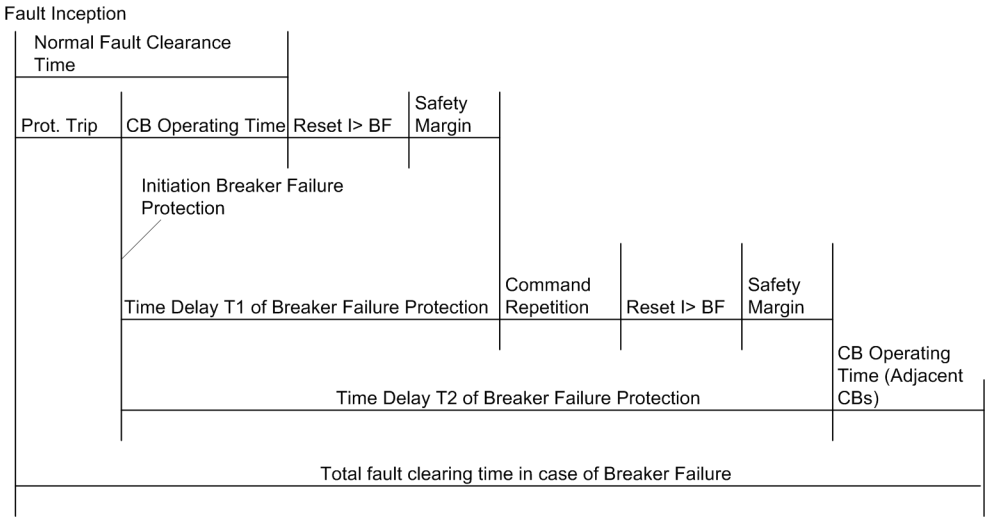

[ls-versag-zeitabl-2stuf-versag-oz-020802, 1, en_GB]

Figure 2-47 Time sequence example for normal clearance of a fault, and with circuit breaker failure, using two-stage breaker failure protection

Single-stage circuit breaker failure protection

With single-stage operation, the adjacent circuit breakers (i.e. the circuit breakers of the busbar zone and, if applicable, the circuit breaker at the remote end) are tripped after a delay time **T2** (address 3906) should the fault not have been cleared within this time.

The times **T1-1pole** (address 3904) and **T1-3pole** (address 3905) are then set to ∞ since they are not needed.

You can also use the first stage alone if you wish to use different delay times after 1-pole and 3-pole tripping of the feeder protection. In this case set **T1-1pole** (address 3904) and **T1-3pole** (address 3905) separately, but address 3903 **1p-RETRIP (T1)** to ***NO***, to avoid a 1-pole trip command to the busbar. Set **T2** (address3906) to ∞ or equal to **T1-3pole** (address 3905). Be sure that the correct trip commands are assigned to the desired trip relay(s).

The delay time is determined from the maximum operating time of the feeder circuit breaker, the reset time of the current detectors of the circuit breaker failure protection, plus a safety margin which allows for any tolerance of the delay timers. *Figure 2-48* illustrates the timing of a typical circuit breaker failure scenario The dropout time for sinusoidal currents is ≤ 15 ms. If current transformer saturation is anticipated, the time should be set to 25 ms.

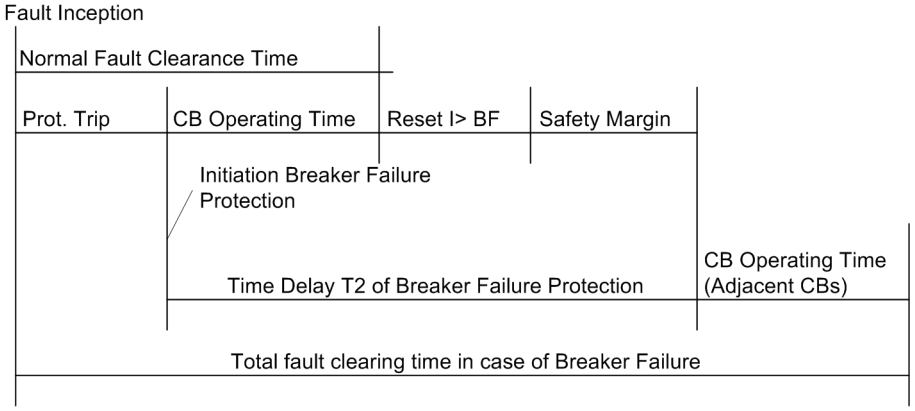

[ls-versag-zeitabl-1stuf-versag-oz-020802, 1, en_GB]

Figure 2-48 Time sequence example for normal clearance of a fault, and with circuit breaker failure, using single-stage breaker failure protection

Circuit breaker not operational

These delays are not necessary if the control circuit of the local circuit breaker is faulted (e.g. control voltage failure or air pressure failure) since it is apparent that the circuit breaker is not capable of clearing the fault. If the relay is informed about this disturbance (via the binary input *>CB faulty*, the adjacent circuit breakers (busbar and remote end if applicable) are tripped after the time **T3-BkrDefective** (address 3907) which is usually set to **0**.

Address 3908 **Trip BkrDefect.** determines to which output the trip command is routed in the event that the circuit breaker is not operational when a feeder protection trip occurs. Select that output which is used to trip the adjacent circuit breakers (bus-bar trip).

End fault protection

The end fault protection can be switched in address 3921 **End Flt. stage** separately to ***ON*** or ***OFF***. An end fault is a short-circuit between the circuit breaker and the current transformer set of the feeder. The end fault protection presumes that the device is informed about the circuit breaker position via circuit breaker auxiliary contacts connected to binary inputs.

If, during an end fault, the circuit breaker is tripped by a reverse stage of the feeder protection or by the busbar protection (the fault is a busbar fault as determined from the location of the current transformers), the fault current will continue to flow, because the fault is fed from the remote end of the feeder circuit.

The time **T-EndFault** (address 3922) is started when, during the time of pickup condition of the feeder protection, the circuit breaker auxiliary contacts indicate open poles and, at the same time, current flow is still detected (address 3902). The trip command of the end fault protection is intended for the transmission of an intertrip signal to the remote end circuit breaker.

Thus, the delay time must be set so that it can bridge out short transient apparent end fault conditions which may occur during switching of the circuit breaker.

Pole discrepancy supervision

In address 3931 **PoleDiscrepancy** (pole discrepancy protection), the pole discrepancy supervision can be switched separately ***ON*** or ***OFF***. It is only useful if the circuit breaker poles can be operated individually. It avoids that only one or two poles of the local circuit breaker are open continuously. It has to be provided that either the auxiliary contacts of each pole or the series connection of the NO auxiliary contacts and the series connection of the NC auxiliary contacts are connected to the device's binary inputs. If these conditions are not fulfilled, switch address 3931 ***OFF***.

The delay time **T-PoleDiscrep.** (address 3932) indicates how long a circuit breaker pole discrepancy condition of the feeder circuit breaker, i.e. only one or two poles open, may be present before the pole discrepancy supervision issues a 3-pole trip command. This time must be clearly longer than the duration of a 1-pole automatic reclose cycle. The time should be less than the permissible duration of an unbalanced load condition which is caused by the unsymmetrical position of the circuit breaker poles. Standard durations are between 2 s and 5 s.

2.6.3 Settings

The table indicates region-specific presettings. Column C (configuration) indicates the corresponding secondary nominal current of the current transformer.

Addr.	Parameter	C	Setting Options	Default Setting	Comments
3901	FCT BreakerFail		ON OFF	ON	Breaker Failure Protection
3902	I> BF	1A	0.05 .. 20.00 A	0.10 A	Pick-up threshold I>
		5A	0.25 .. 100.00 A	0.50 A	
3903	1p-RETRIP (T1)		NO YES	YES	1pole retrip with stage T1 (local trip)
3904	T1-1pole		0.00 .. 30.00 sec	0.00 sec	T1, Delay after 1pole start (local trip)

Addr.	Parameter	C	Setting Options	Default Setting	Comments
3905	T1-3pole		0.00 .. 30.00 sec	0.00 sec	T1, Delay after 3pole start (local trip)
3906	T2		0.00 .. 30.00 sec	0.15 sec	T2, Delay of 2nd stage (busbar trip)
3907	T3-BkrDefective		0.00 .. 30.00 sec	0.00 sec	T3, Delay for start with defective bkr.
3908	Trip BkrDefect.		NO with T1-trip with T2-trip w/ T1/T2-trip	NO	Trip output selection with defective bkr
3909	Chk BRK CONTACT		NO YES	YES	Check Breaker contacts
3912	3I0> BF	1A	0.05 .. 20.00 A	0.10 A	Pick-up threshold 3I0>
		5A	0.25 .. 100.00 A	0.50 A	
3913	T2StartCriteria		With exp. of T1 Parallel withT1	Parallel withT1	T2 Start Criteria
3921	End Flt. stage		ON OFF	OFF	End fault protection
3922	T-EndFault		0.00 .. 30.00 sec	2.00 sec	Trip delay of end fault protection
3931	PoleDiscrepancy		ON OFF	OFF	Pole Discrepancy supervision
3932	T-PoleDiscrep.		0.00 .. 30.00 sec	2.00 sec	Trip delay with pole discrepancy

2.6.4 Information List

No.	Information	Type of Information	Comments
1401	>BF on	SP	>BF: Switch on breaker fail protection
1402	>BF off	SP	>BF: Switch off breaker fail protection
1403	>BLOCK BkrFail	SP	>BLOCK Breaker failure
1404	>BFactivate3I0>	SP	>BF Activate 3I0> threshold
1415	>BF Start 3pole	SP	>BF: External start 3pole
1424	>BF STARTonlyT2	SP	>BF: Start only delay time T2
1432	>BF release	SP	>BF: External release
1435	>BF Start L1	SP	>BF: External start L1
1436	>BF Start L2	SP	>BF: External start L2
1437	>BF Start L3	SP	>BF: External start L3
1439	>BF Start w/o I	SP	>BF: External start 3pole (w/o current)
1440	BkrFailON/offBI	IntSP	Breaker failure prot. ON/OFF via BI
1451	BkrFail OFF	OUT	Breaker failure is switched OFF
1452	BkrFail BLOCK	OUT	Breaker failure is BLOCKED
1453	BkrFail ACTIVE	OUT	Breaker failure is ACTIVE
1461	BF Start	OUT	Breaker failure protection started
1466	BreakerFail. L1	OUT	Breaker failure L1
1467	BreakerFail. L2	OUT	Breaker failure L2

No.	Information	Type of Information	Comments
1468	BreakerFail. L3	OUT	Breaker failure L3
1469	BreakerFail 3I0	OUT	Breaker failure 3I0
1472	BF T1-TRIP 1pL1	OUT	BF Trip T1 (local trip) - only phase L1
1473	BF T1-TRIP 1pL2	OUT	BF Trip T1 (local trip) - only phase L2
1474	BF T1-TRIP 1pL3	OUT	BF Trip T1 (local trip) - only phase L3
1476	BF T1-TRIP L123	OUT	BF Trip T1 (local trip) - 3pole
1493	BF TRIP CBdefec	OUT	BF Trip in case of defective CB
1494	BF T2-TRIP(bus)	OUT	BF Trip T2 (busbar trip)
1495	BF EndFlt TRIP	OUT	BF Trip End fault stage
1496	BF CBdiscrSTART	OUT	BF Pole discrepancy pickup
1497	BF CBdiscr L1	OUT	BF Pole discrepancy pickup L1
1498	BF CBdiscr L2	OUT	BF Pole discrepancy pickup L2
1499	BF CBdiscr L3	OUT	BF Pole discrepancy pickup L3
1500	BF CBdiscr TRIP	OUT	BF Pole discrepancy Trip

2.7 Monitoring Functions

The device is equipped with extensive monitoring capabilities - concerning both, hardware and software. In addition, the measured values are also constantly checked for plausibility, so that the current and voltage transformer circuits are largely integrated into the monitoring. It is also possible to implement trip circuit supervision. This supervision is possible using appropriate available binary inputs.

2.7.1 Measurement Supervision

2.7.1.1 Hardware Monitoring

The device is monitored from the measuring inputs up to the command relays. Monitoring circuits and the processor check the hardware for malfunctions and inadmissible conditions.

Auxiliary and Reference Voltages

The processor voltage of 5 V is monitored by the hardware, as the processor no longer functions on undershooting the minimum value. In that case, the device is not operational. On recovery of the voltage the processor system is restarted.

If the supply voltage is removed or switched off, the device is taken out of service, and an indication is immediately generated by a normally closed contact. Brief voltage interruptions of up to 50 ms do not disturb the operational readiness of the device (see Technical Data).

The processor monitors the reference voltage of the ADC (analog-to-digital converter). The protection is suspended if the voltages deviate outside an allowable range, and persistent deviations are reported.

Buffer battery

The buffer battery, which ensures the operation of the internal clock and the storage of counters and indications if the auxiliary voltage fails, is periodically checked for charge status. On its undershooting a minimum admissible voltage, the indication *Fail Battery* (no.177) is issued.

If the device is not supplied with auxiliary voltage for more than 1 or 2 days, the internal clock is switched off automatically, i.e. the time is not registered any more. The data in the event and fault buffers, however, remain stored.

Memory Components

The main memory (RAM) is tested when the system starts up. If a fault is detected during this process, the startup is aborted. Error LED and LED 1 light up and the remaining LEDs start flashing simultaneously. During operation the memory is checked by means of its checksum.

A checksum of the program memory (EPROM) is cyclically generated and compared with the stored program checksum.

A checksum for the parameter memory (FLASH-EPROM) is cyclically generated and compared with the checksum which is computed after each change of the stored parameters.

If a malfunction occurs, the processor system is restarted.

Offset of the Analogue-to-Digital Converter

The offset of the ADC is measured cyclically for each channel and corrected. When the offset reaches an inadmissibly high value, the indication *Error Offset* (No. 191) is displayed. The protection functions remain active.

Sampling frequency

The sampling frequency and the synchronism of the analog-digital converters is continuously monitored. If any deviations cannot be removed by remedied synchronization, then the processor system is restarted.

Measured Value Acquisition - Currents

Up to four input currents are measured by the device. If the three phase currents and the earth current from the current transformer starpoint or a separated earth current transformer of the line to be protected are connected to the device, their digitized sum must be zero. Faults in the current circuit are recognized if

$$I_F = |\underline{I}_{L1} + \underline{I}_{L2} + \underline{I}_{L3} + k_I \cdot \underline{I}_E| > \mathbf{\Sigma I\ THRESHOLD} + \mathbf{\Sigma I\ FACTOR} \cdot \Sigma |I|$$

Factor k_I (address 221 **I4/Iph CT**) takes into account a possible different ratio of a separate I_E transformer (e.g. cable core balance current transformer). **ΣI THRESHOLD** and **ΣI FACTOR**. are setting parameters.

The **ΣI FACTOR** $\Sigma |I|$ part takes into account permissible current-proportional transformation errors of the transformer, which can occur in the case of high short-circuit currents.*Figure 2-49*). $\Sigma |I|$ is the sum of all currents:

$$\Sigma |I| = |\underline{I}_{L1}| + |\underline{I}_{L2}| + |\underline{I}_{L3}| + |k_I \cdot \underline{I}_E|$$

This fault is signaled as *Failure Σ I* (no. 162).

NOTE

Current sum monitoring can operate properly only when the residual current of the protected line is fed to the fourth current input (I_4) of the relay.

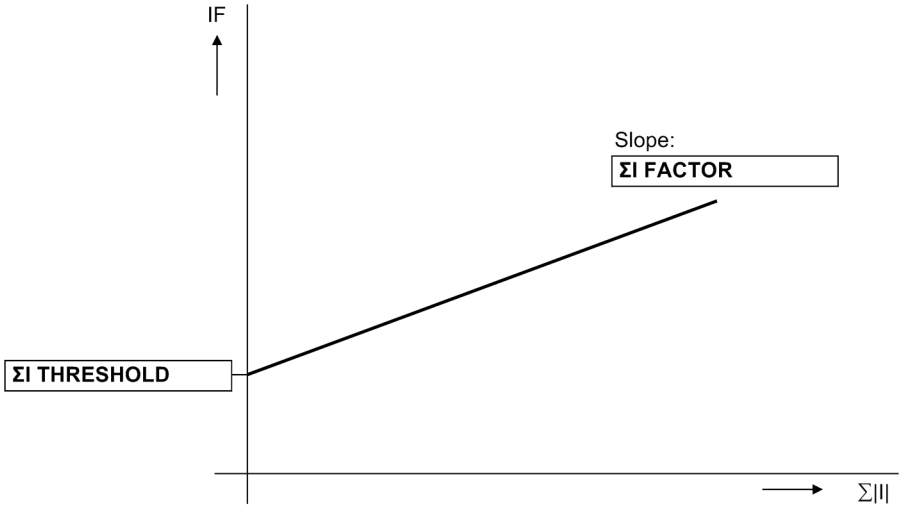

[stromsummenueberwachung-020313-kn, 1, en_GB]

Figure 2-49 Current sum monitoring

Measured Value Acquisition Voltages

Four measuring inputs are available in the voltage path: three for phase-to-earth voltages and one input for the displacement voltage (e-n voltage of open delta winding) or a busbar voltage. If the displacement voltage is connected to the device, the sum of the three digitized phase voltages must equal three times the zero sequence voltage. Errors in the voltage transformer circuits are detected when

$$U_F = |\underline{U}_{L1} + \underline{U}_{L2} + \underline{U}_{L3} + k_U \cdot \underline{U}_{EN}| > 25\ \text{V}.$$

The factor k_U allows for a difference of the transformation ratio between the displacement voltage input and the phase voltage inputs (address 211 **Uph / Udelta**).

This fault is signaled as *Fail Σ U Ph-E* (no. 165).

NOTE

Voltage sum monitoring is only effective if an external displacement voltage is connected to the displacement voltage measuring input.

2.7.1.2 Software Monitoring

Watchdog

For continuous monitoring of the program sequences, a time monitor is provided in the hardware (watchdog for hardware) that expires upon failure of the processor or an internal program, and causes a reset of the processor system with complete restart.

An additional software watchdog ensures that malfunctions during the processing of programs are discovered. This also initiates a restart of the processor system.

If the fault is not eliminated by the restart, a second restart attempt is initiated. If the fault is still present after three restart attempts within 30 s, the protection system will take itself out of service, and the red LED "ERROR" lights up. The device ready relay drops out and alarms the device malfunction with its normally closed contact("Life-Contact").

2.7.1.3 Monitoring External Transformer Circuits

Interruptions or short circuits in the secondary circuits of the current and voltage transformers, as well as faults in the connections (important for commissioning!), are detected and reported by the device. To this end, the measured values are cyclically checked in the background as long as no fault detection is present.

Current Symmetry

During normal system operation the currents are assumed to be largely symmetrical. The symmetry is monitored in the device by magnitude comparison. The smallest phase current is compared to the largest phase current. Asymmetry is recognized if:

$|I_{min}| / |I_{max}| <$ **BAL. FACTOR I** as long as $I_{max} >$ **BALANCE I LIMIT**

I_{max} is the highest, I_{min} the lowest of the three phase currents. The symmetry factor **BAL. FACTOR I** (address 2905) represents the allowable asymmetry of the phase currents while the limit value **BALANCE I LIMIT** (address 2904) is the lower limit of the operating range of this monitoring (see *Figure 2-50*). The dropout ratio is about 97 %.

After a settable time (5 s -100 s), this malfunction is signaled as *Fail I balance* (No. 163).

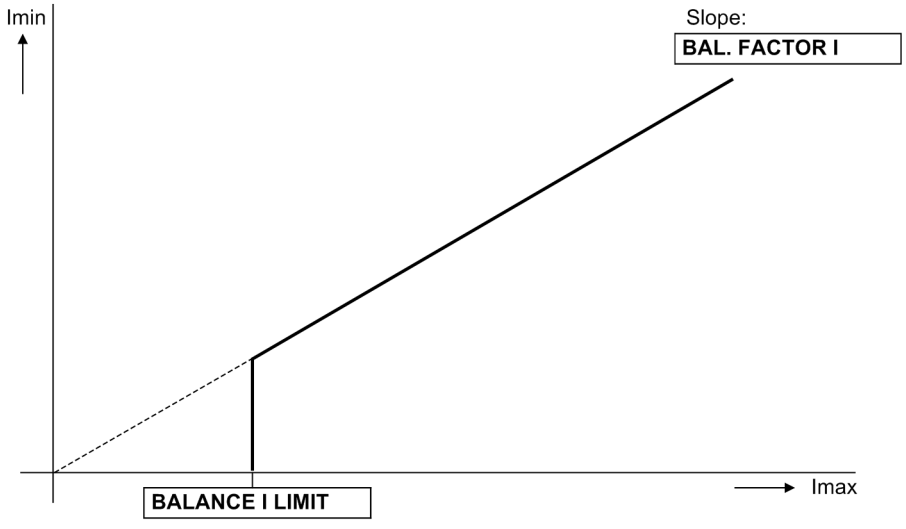

[stromsymmetrieueberwachung-020313-kn, 1, en_GB]

Figure 2-50 Current symmetry monitoring

Broken Conductor

A broken wire of the protected line or in the current transformer secondary circuit can be detected, if the minimum current **PoleOpenCurrent** flows via the feeder. If the minimum phase current is below this limit while the other phase currents are above this limit, an interruption of this conductor may be assumed. If

current asymmetry is also detected (see margin heading “Current Symmetry”), the device issues the message *Fail Conductor* (No. 195).

Voltage Symmetry

During normal system operation the voltages are assumed to be largely symmetrical. The symmetry is monitored in the device by magnitude comparison. The smallest phase voltage is compared to the largest. Asymmetry is recognized if:

$|U_{min}| / |U_{max}| <$ **BAL. FACTOR U** as long as $|U_{max}| >$ **BALANCE U-LIMIT**

Thereby U_{max} is the largest of the three phase-to-phase voltages and U_{min} the smallest. The symmetry factor **BAL. FACTOR U** (address 2903) represents the allowable asymmetry of the voltages while the limit value **BALANCE U-LIMIT** (address 2902) is the lower limit of the operating range of this monitoring (see *Figure 2-51*). The dropout ratio is about 97 %.

After a settable time, this malfunction is signaled as *Fail U balance* (no.167).

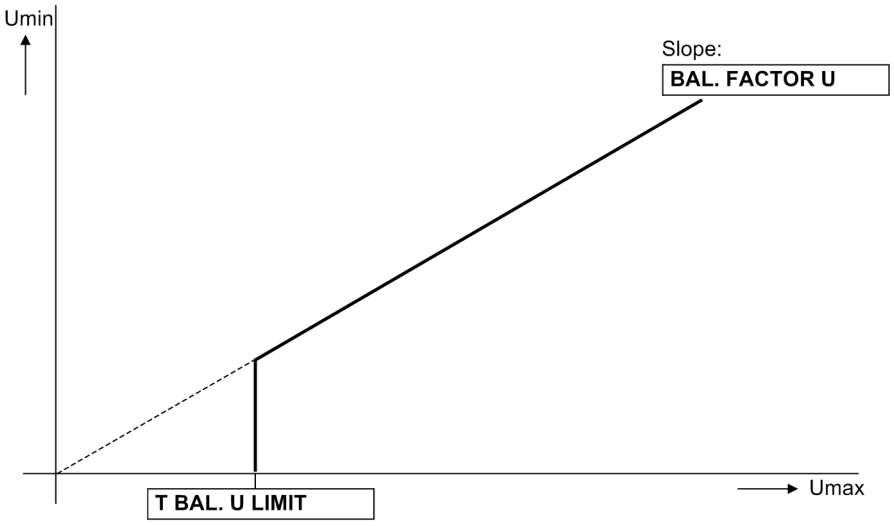

[spannungssymmetrieueberwachung-020313-kn, 1, en_GB]

Figure 2-51 Voltage symmetry monitoring

Voltage Phase Sequence

Verification of the faulted phases, phase preference, direction measurement and polarization with quadrature voltages usually require clockwise rotation of the measured values. The phase rotation of the measuring voltages is checked by control of the phase sequence of the voltages

$\underline{U}_{L1}$ before $\underline{U}_{L2}$ before $\underline{U}_{L3}$

. This check takes place if each measured voltage has a minimum magnitude of

$|U_{L1}|, |U_{L2}|, |U_{L3}| > 40\ V/\sqrt{3}$

. In case of negative phase rotation, the indication *Fail Ph. Seq.* (No. 171) is displayed.

If the system has a negative phase rotation, this must have been set during the configuration of the power system data (Section *2.1.3.1 Setting Notes*, address235). In such event, the phase rotation monitoring applies to the corresponding opposite phase sequence.

Fast Asymmetrical Measuring Voltage Failure "Fuse Failure Monitor"

In the event of a measured voltage failure due to a short circuit fault or a broken conductor in the voltage transformer secondary circuit certain measuring loops may mistakenly see a voltage of zero.

If fuses are used instead of a voltage transformer miniature circuit breaker (VT mcb) with connected auxiliary contacts, then the “Fuse Failure Monitor” can detect problems in the voltage transformer secondary circuit. Of course, the VT miniature circuit breaker and the “Fuse-Failure-Monitor” can be used at the same time.

Figures *Figure 2-52* and *Figure 2-53* show the logic of the “fuse-failure monitor”.

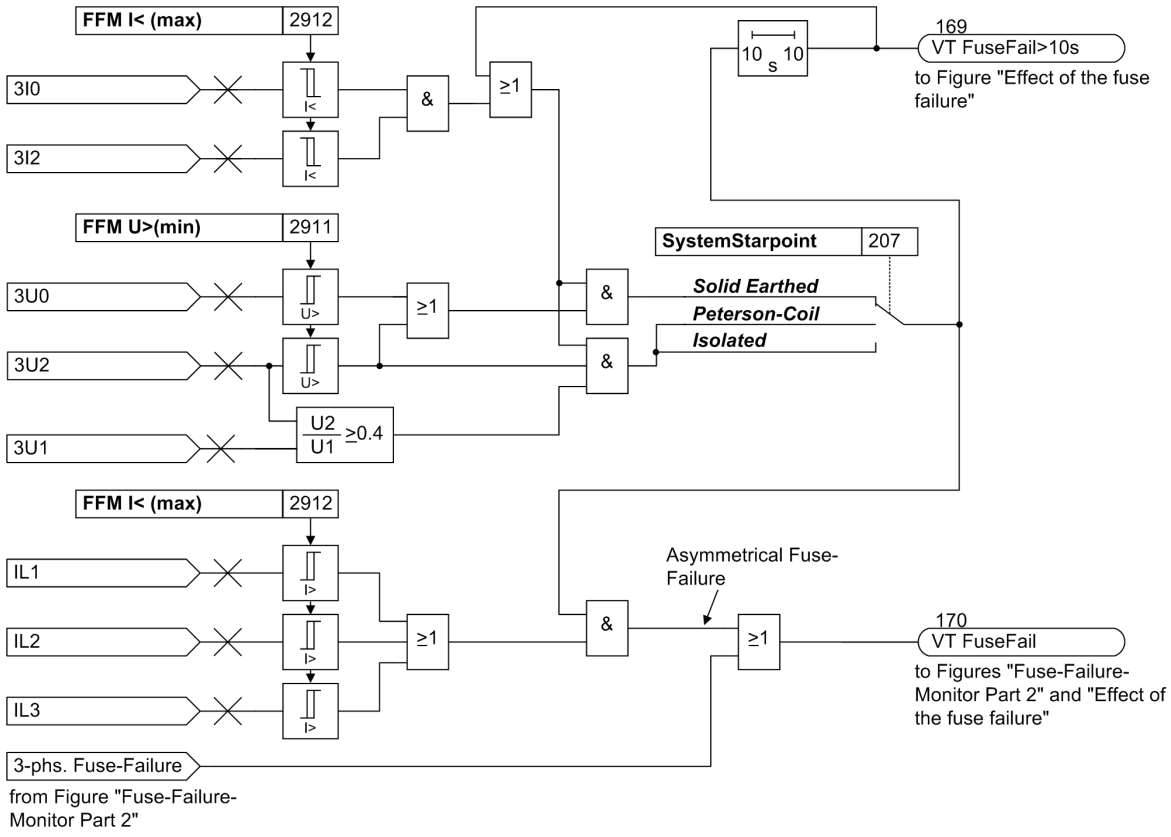

[lo-ffm-mcl-01-20101014, 1, en_GB]

Figure 2-52 Fuse failure monitoring Part 1: Detection of asymmetrical measuring voltage failure

The **asymmetrical measured voltage failure** is characterized by its voltage asymmetry with simultaneous current symmetry. If there is substantial voltage asymmetry of the measured values, without asymmetry of the currents being registered at the same time, this indicates the presence of an asymmetrical failure in the voltage transformer secondary circuit.

The asymmetry of the voltage is detected by the fact that either the zero sequence voltage or the negative sequence voltage exceed a settable value **FFM U>(min)** (address 2911). The current is assumed to be sufficiently symmetrical if both the zero sequence as well as the negative sequence current are below the settable threshold **FFM I< (max)** (address 2912).

In non-earthed systems (address 207 **SystemStarpoint**), the zero-sequence system quantities are no reliable criterion since a considerable zero sequence voltage occurs also in case of a simple earth fault where a significant zero sequence current does not necessarily flow. Therefore, the zero sequence voltage is not evaluated in these systems but only the negative sequence voltage and the ratio between negative sequence and positive sequence voltage.

The immediate effect of the "Fuse failure monitor" is signaled by means of the indication *VT FuseFail* (No. 170). To detect an asymmetrical measuring voltage failure, at least one phase current must exceed the value **FFM I< (max)** (address 2912).

In case that zero sequence or negative sequence current arise within 10 s after detecting an asymmetrical measuring voltage failure, a short-circuit in the network is assumed and the signal *VT FuseFail* is immediately reset. If the zero-sequence voltage or the negative-sequence voltage exceed the presettable value **FFM U>(min)** (address 2911) for more than 10 s, the signal *VT FuseFail>10s* (No. 169) will be generated. In this status, a reset of the signal *VT FuseFail* will no longer be effected by means of an increase of the zero-sequence current or the negative-sequence current, but only through the fact that the voltages in the zero-sequence system and in the negative-sequence system fall below the threshold value. The signal *VT FuseFail* can also be generated independently from the quantity of the phase currents.

During a single-pole automatic reclose dead time, the "Fuse failure monitor" does not detect an asymmetrical measuring voltage failure. Due to the de-energization in one phase, an operational asymmetry is caused on

the primary side which cannot be distinguished from a measuring voltage failure in the secondary circuit (not represented in the logic diagram).

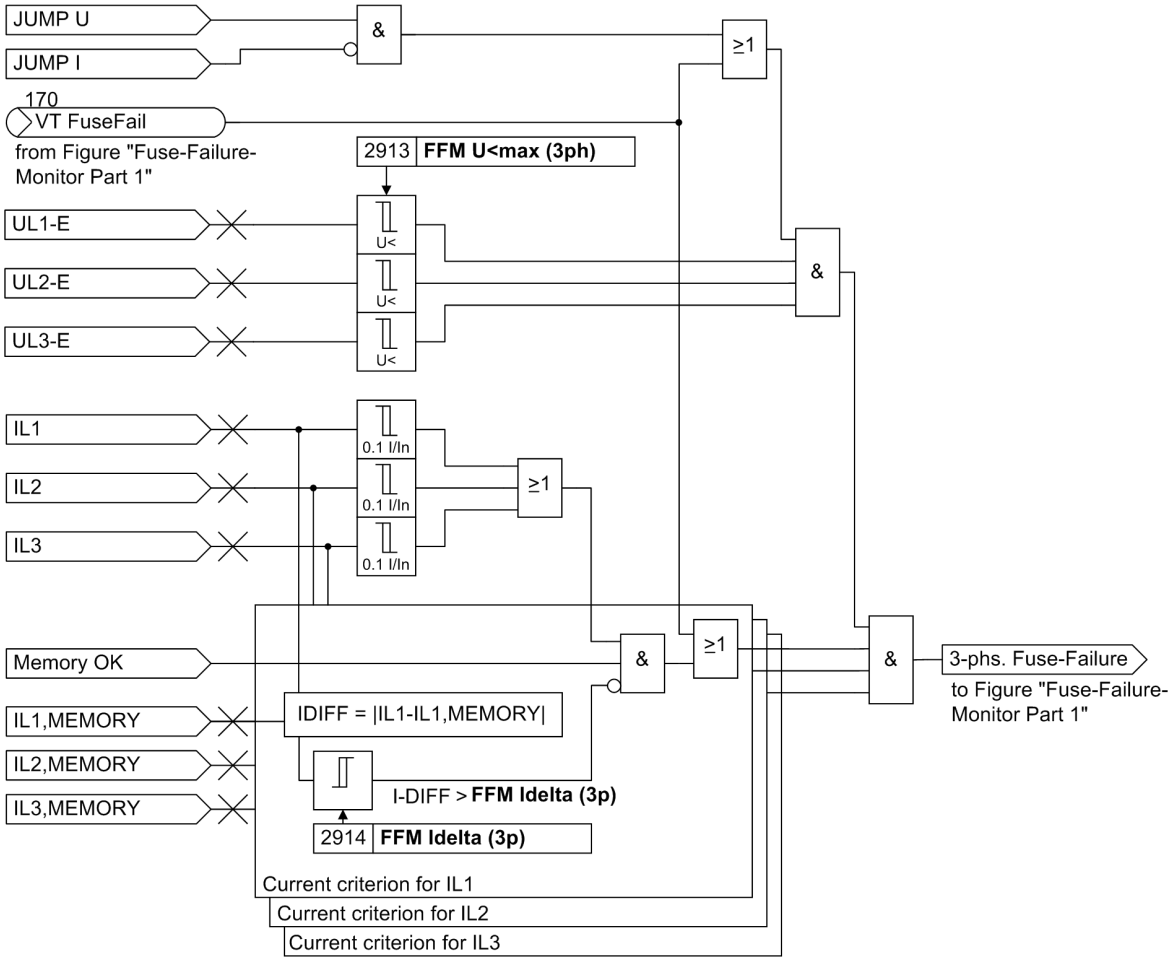

[lo_7vk6-ffm-mcl-02, 1, en_GB]

Figure 2-53 Fuse failure monitoring Part 2: Detection of three-phase measuring voltage failure

A **3-phase failure of the secondary measured voltages** can be distinguished from an actual system fault by the fact that the currents have no significant change in the event of a failure in the secondary measured voltage. For this reason, the current values are routed to a buffer so that the difference between present and stored current values can be analyzed to recognize the magnitude of the current differential (current differential criterion), see *Figure 2-53*.

A three-pole measuring voltage failure is detected if:

- All 3 phase-to-earth voltages are smaller than the threshold **`FFM U<max (3ph)`** (address 2913.
- The current differential in all 3 phases is smaller than the threshold **`FFM Idelta (3p)`** (Adresse 2914).

A three-pole measuring voltage failure is also detected without the mentioned criteria if the signal *`VT FuseFail`* (No. 170) previously has been generated by an asymmetrical measuring voltage failure. The measuring voltage failure is still detected in this state if the three phase-to-earth voltages subsequently fall below the threshold value **`FFM U<max (3ph)`** (address 2913).

The effect of the signals *`VT FuseFail`* (No. 170) and *`VT FuseFail>10s`* (No. 169) on the protection functions is described in the following section “Effect of the measuring voltage failure”.

Additional Measured Voltage Failure Monitoring *`Failure: Voltage absent`*

If no measuring voltage is available after power-on of the circuit breaker (e.g. because the voltage transformers are not connected), the absence of the voltage can be detected and reported by an additional monitoring function. Where circuit breaker auxiliary contacts are used, they should be used for monitoring as well.

Figure 2-54 showa the logic diagram of the measured voltage failure monitoring. A failure of the measured voltage is detected if the following conditions are met at the same time:

- All 3 phase-to-earth voltages are less than **FFM U<max (3ph)**
- At least 1 phase current is larger than **PoleOpenCurrent** or at least 1 breaker pole is closed (can be set),
- No protection function has picked up,
- This condition persists for a settable time **T V-Supervision** (default setting: 3 s)

The time **T V-Supervision** is required to prevent that a voltage failure is detected before the protection picks up.

If this monitoring function picks up, the indication *Fail U absent* (No. 168) will be issued. The effect of this monitoring indication will be described in the following section “Effect of the Measuring Voltage Failure”.

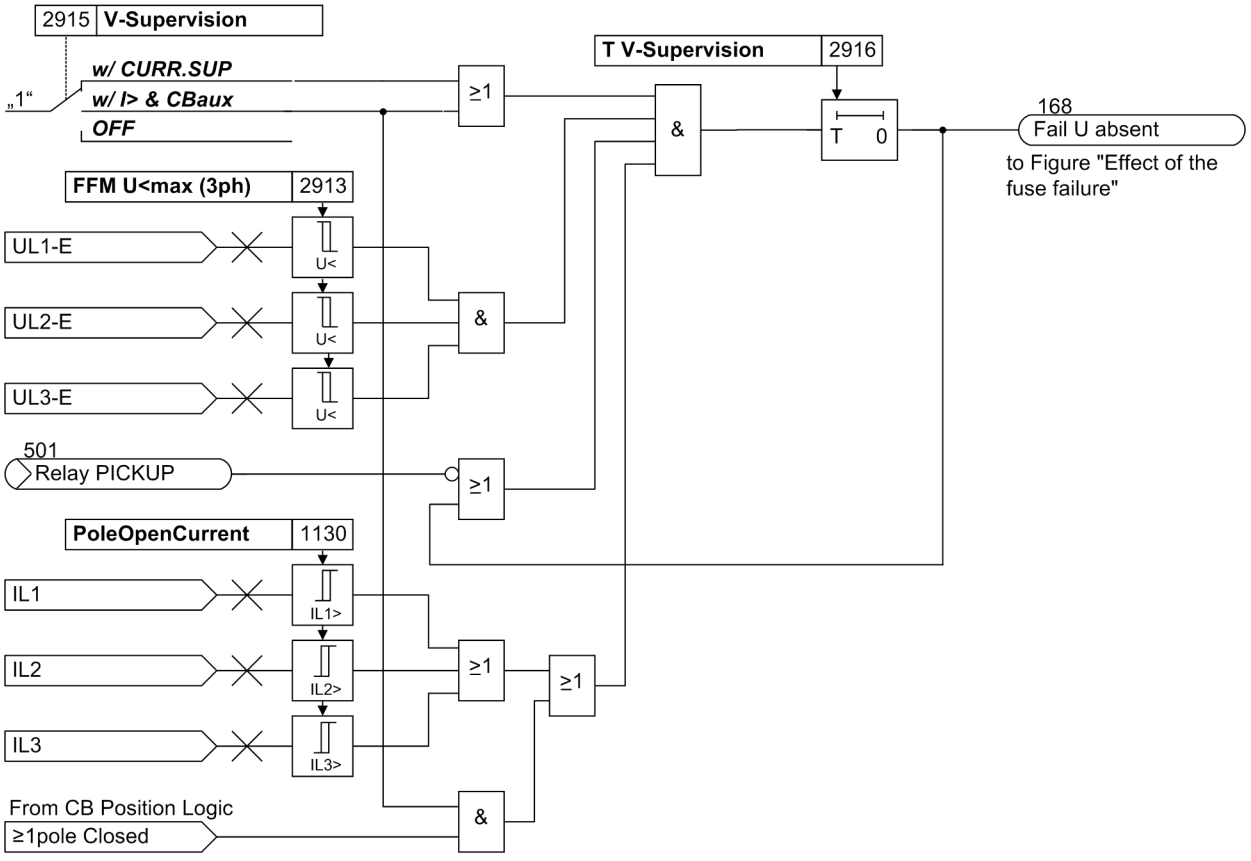

[logikdia-zusaetzl-messspgausfall-wlk-010802, 1, en_GB]

Figure 2-54 Logic diagram of the additional measuring-voltage failure detection *Fail U absent*

Effect of the measuring voltage failure

In the event of a measuring voltage failure due to a short-circuit or broken conductor in the voltage transformer secondary circuit, some or all measuring loops may mistakenly see a voltage of zero.

Figure 2-55 shows the effect on the protection functions in case that a measuring voltage is detected by the “fuse failure monitor” *VT FuseFail* (No. 170), *VT FuseFail>10s* (No. 169), the additional measuring voltage failure monitoring *Fail U absent* (No. 168) and binary input VT miniature circuit breaker *>FAIL:Feeder VT* (No. 361).

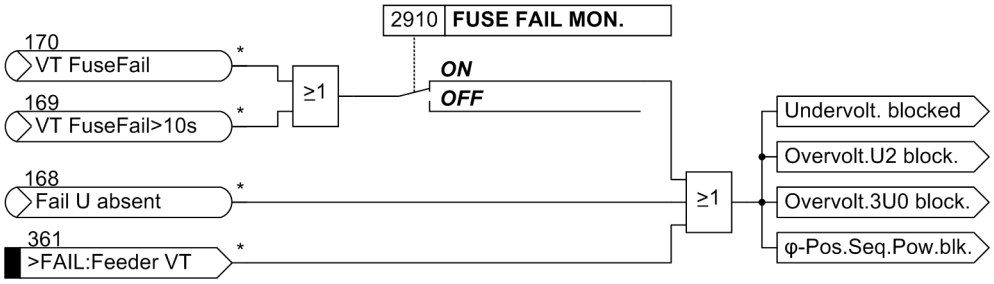

[lo-ffm-mcl-20101014, 1, en_GB]

Figure 2-55 Effect of the measuring voltage failure

2.7.1.4 Monitoring the Phase Angle of the Positive Sequence Power

This monitoring function allows determining the direction of power flow. You can monitor the phase angle of the complex power, and generate an indication when the power phasor is inside a settable segment.

One example of this application is the indication of capacitive reactive power. The monitoring indication can then be used to control the overvoltage protection function. For this purpose, two angles must be set, as shown in *Figure 2-56* . In this example, φA = 200° and φB = 340° have been set.

If the measured phase angle φ($\underline{S}_1$) of the positive sequence power is innerhalb the area of the P-Q plane delimited by the angles φA and φB, the indication *ϕ(PQ Pos. Seq.)* (No. 130) is output. The angles φA and φB can be freely set in the range between 0° and 359°. The area starts at φA and extends in a mathematically positive sense as far as the angle φB. A hysteresis of 2° is provided to prevent erroneous indications which might emerge at the threshold limits.

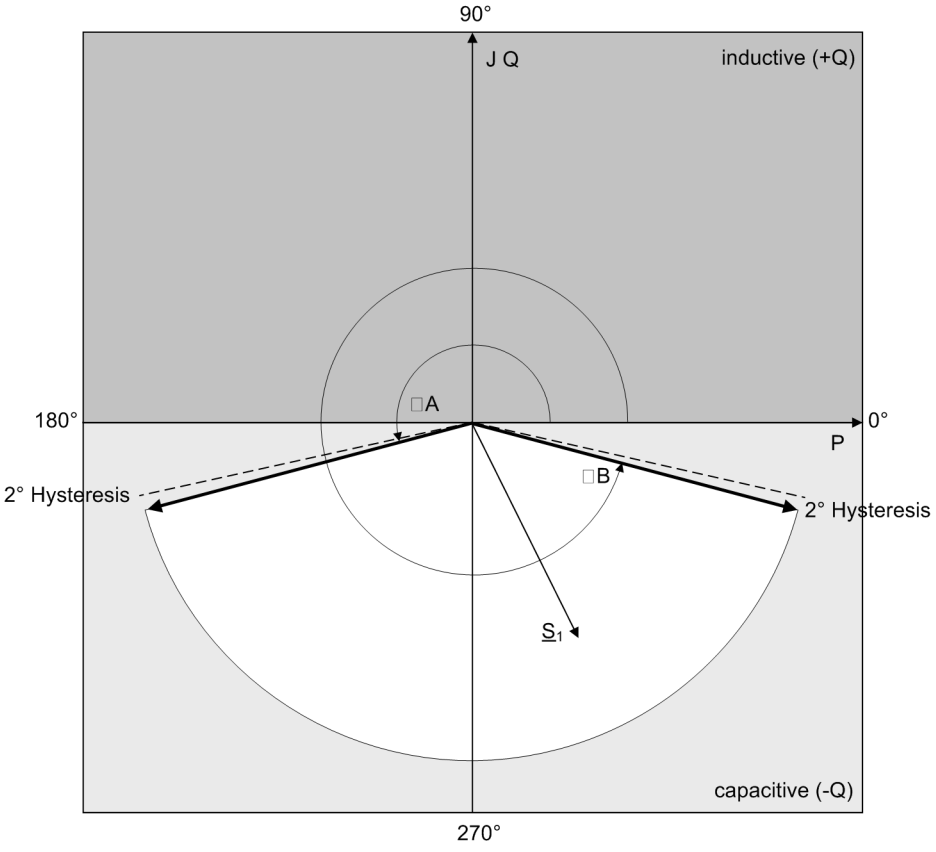

[blindleistung-ind-kap-wlk040602, 1, en_GB]

Figure 2-56 Characteristic of the Positive Sequence System Phase Angle Monitoring

The monitoring function can also be used for the display of negative active power. In this case the areas must be defined as shown in *Figure 2-57* .

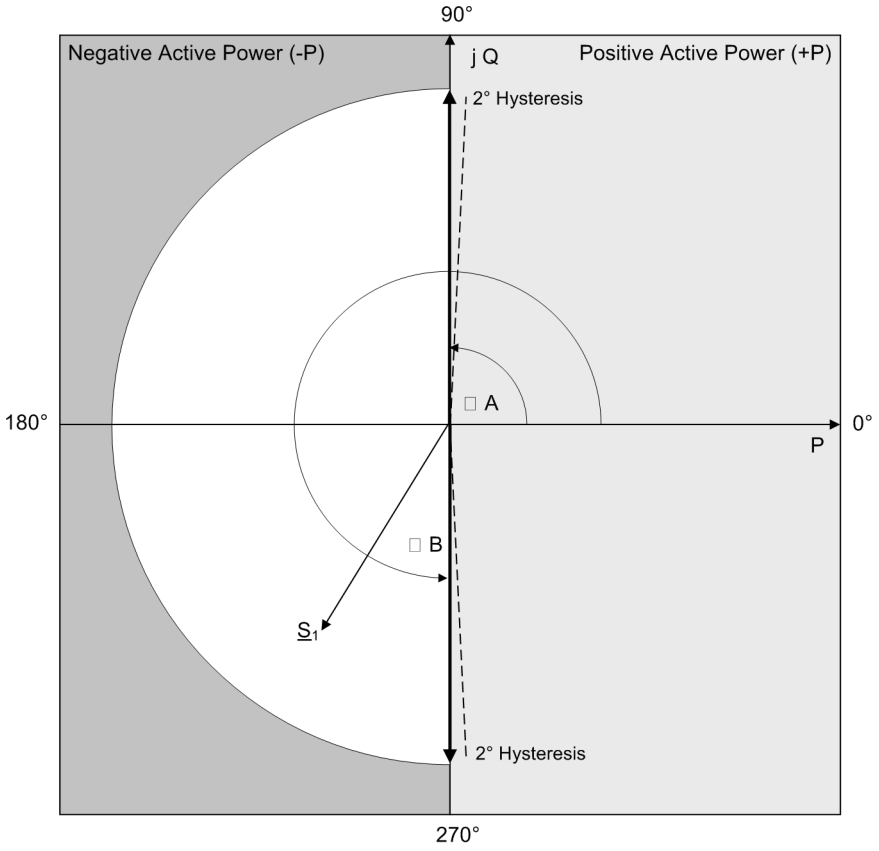

[wirkleistung-ind-kap--wlk040602, 1, en_GB]

Figure 2-57 Phase Angle Monitoring for Negative Active Power

The two angles must be at least 3° apart; if they are not, monitoring is blocked, and the indication *ϕ Set wrong* (No. 132 is output.

The following conditions must be fulfilled for measurement to be enabled:

- The positive sequence current $\underline{I}_1$ is higher than the value set in parameter 2943 **I1>**.
- The positive sequence voltage $\underline{U}_1$ is higher than the value set in parameter 2944 **U1>**.
- The angles set in address 2941 **φA** and 2942 **φB** must be at least 3° apart. Incorrect parameter settings cause the indication 132 *ϕ Set wrong* to be output.
- The "Fuse-Failure-Monitor" and the measured voltage failure monitoring must not have responded, and binary input indication 361 *>FAIL:Feeder VT* must not be present.

If monitoring is not active, this fact is signaled by the indication *ϕ(PQ Pos) block* (No. 131).

Figure 2-58 shows the logic of the positive sequence system phase angle monitoring.

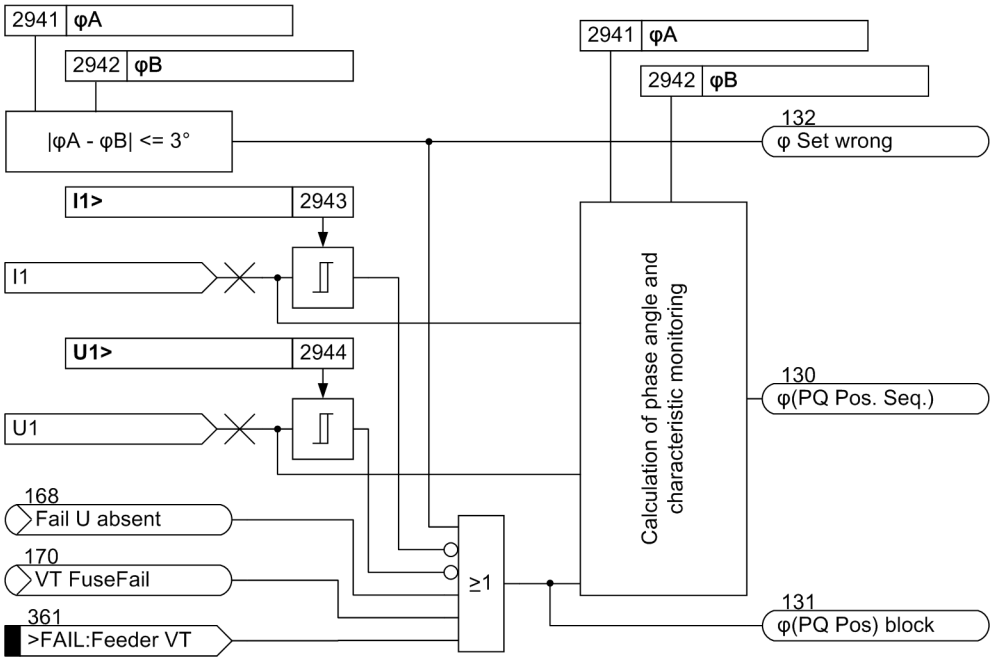

[logikphasenwinkelueberwachung-wlk-040514, 1, en_GB]

Figure 2-58 Logic of the Positive Sequence System Phase Angle Monitoring

2.7.1.5 Malfunction Reaction

Depending on the kind of fault detected, an alarm is given, the processor is restarted or the device is taken out of operation. After three unsuccessful restart attempts, the device is taken out of service. The device ready relay drops out and indicates the device failure with its NC contact ("life contact"). The red LED "ERROR" on the device front lights up, provided that there is an internal auxiliary voltage, and the green LED "RUN" goes off. If the internal auxiliary voltage supply fails, all LEDs are dark. *Table 2-5* shows a summary of the monitoring functions and the malfunction responses of the device.

Table 2-5 Summary of Malfunction Responses of the Device

Monitoring	possible causes	Error response	Message (F.No)	Device
AC/DC supply voltage loss	External (aux. voltage) internal (converter)	Device out of operation alarm, if possible	All LEDs dark *Error 5V*(144)	DOK[2] drops out
Measured Value Acquisition	Internal (converter or reference voltage)	Protection out of operation, alarm	LED "ERROR" *Error A/D-conv.* (181)	DOK[2] drops out
Buffer battery	Internal (battery)	Indication	*Fail Battery* (177)	As allocated
Hardware Watchdog	Internal (processor failure)	Device not in operation	LED "ERROR"	DOK[2] drops out
Software watchdog	Internal (program execution)	Restart attempt[1]	LED "ERROR"	DOK[2] drops out
Main memory	Internal (battery)	Restart attempt [1], Restart abort Device not in operation	LED flashes	DOK[2] drops out
Program memory	Internal (EPROM)	Restart attempt [1]	LED "ERROR"	DOK[2] drops out
Settings memory	internal (Flash-EPROM or RAM)	Restart attempt [1]	LED "ERROR"	DOK[2] drops out
Sampling frequency	Internal (clock generator)	Restart attempt [1]	LED "ERROR"	DOK[2] drops out

Monitoring	possible causes	Error response	Message (F.No)	Device
1 A/5 A-setting	Jumper setting 1/5 A wrong	Indications: Protection out of operation	*Error1A/5Awrong* (192) *Error A/D-conv.* (181) LED "ERROR"	DOK[2] drops out
Calibration data	Internal (EEPROM or RAM)	Indication: Using default values	*Alarm adjustm.* (193)	As allocated
ADC offset	Internal (ADC)	Indication	*Error Offset* (191)	As allocated
Earth current transformer sensitive/insensitivity	I/O-BG does not comply the order number MLFB of the device	Indications: Protection out of operation	*Error neutralCT* (194)*Error A/D-conv.* (181) LED "ERROR"	DOK[2] drops out
Modules	Module does not comply with ordering number	Indications: Protection out of operation	"Error Board BG1...7" (FNo. 183 ... 189) and if applicable *Error A/D-conv.*. (181)	DOK[2] drops out
Current sum	Internal (measured value acquisition)	Indication	*Failure Σ I* (162)	As allocated
Current Symmetry	External (power system or current transformer)	Message	*Fail I balance* (163)	As allocated
Fail Conductor	External (power system or current transformer)	Message	*Fail Conductor* (195)	As allocated
Voltage sum	Internal (measured value acquisition)	Message	*Fail Σ U Ph-E* (165)	As allocated
Voltage Symmetry	External (power system or voltage transformer)	Message	*Fail U balance* (167)	As allocated
Voltage Phase Sequence	External (power system or connection)	Message	*Fail Ph. Seq.* (171)	As allocated
Voltage failure, three-phase"Fuse-Failure-Monitor"	External (power system or connection)	Message Undervoltage protection is blocked	*VT Fuse-Fail>10s* (169)	As allocated
Voltage failure, single and two-phase "Fuse-Failure-Monitor"	External (voltage transformers)	Message Undervoltage protection is blocked	*VT Fuse-Fail>10s* (169)	As allocated
Voltage failure, three-phase	External (power system or connection)	Message Undervoltage protection is blocked	*Fail U absent* (168)	As allocated
Trip Circuit Supervision	External (trip circuit or control voltage)	Message	*FAIL: Trip cir.* (6865)	As allocated

[1] after three unsuccessful restarts, the device is taken out of service.

[2] DOK = " Device OK" = Break contact of the readiness relay = Life contact

2.7.1.6 Setting Notes

General

The sensitivity of the measured value monitoring can be changed. Experiential values set ex works are adequate in most cases. If particularly high operational asymmetries of the currents and/or voltages are

expected, or if one or more monitoring functions pick up sporadically during normal operation, the sensitivity settings should be made less sensitive..

At address 2901 **MEASURE. SUPERV** measurement supervision can be switched ***ON*** or ***OFF***.

Symmetry monitoring

Address2902 **BALANCE U-LIMIT** determines the limit voltage (phase-to-phase), above which the voltage symmetry monitoring is effective. Address 2903 **BAL. FACTOR U** is the associated balance factor, i.e. the gradient of the balance characteristic. The indication *Fail U balance* (No 167) can be delayed under address 2908 **T BAL. U LIMIT**. These settings can only be changed via DIGSI at **Display Additional Settings**.

Address2904 **BALANCE I LIMIT** determines the limit current above which the current symmetry monitoring is effective. Address 2905 **BAL. FACTOR I** is the associated balance factor, i.e. the gradient of the balance characteristic. The indication *Fail I balance* (No 163) can be delayed under address 2909 **T BAL. I LIMIT**. These settings can only be changed via DIGSI at **Display Additional Settings**.

Sum Monitoring

Address 2906 **ΣI THRESHOLD** determines the limit current above which the current sum monitoring is activated (absolute portion, only relative to I_N). The relative portion (relative to the maximum phase current) for activating the current sum monitoring is set at 2907 **ΣI FACTOR**. These settings can only be changed via DIGSI at **Display Additional Settings**.



NOTE

Current sum monitoring can operate properly only when the residual current of the protected line is fed to the fourth current input (I_4) of the relay.

Asymmetrical measuring voltage failure "Fuse Failure Monitor"

The settings for the “fuse failure monitor” for non-symmetrical measuring voltage failure must be selected such that on the one hand it is reliably activated if a phase voltage fails (address 2911 **FFM U>(min)**), but does not pick up on earth faults in an earthed network on the other hand. Accordingly, address 2912 **FFM I<(max)** (max) must be set sufficiently sensitive (below the smallest fault current during earth faults). These settings can only be changed via DIGSI at **Display Additional Settings**.

In address 2910 **FUSE FAIL MON.** the “Fuse-Failure-Monitor”, e.g. during asymmetrical testing, can be switched ***OFF***.

Three-phase measuring-voltage failure "Fuse Failure Monitor"

In address 2913 **FFM U<max (3ph)** the minimum voltage threshold is set.If the measured voltage drops below this threshold and a simultaneous current jump which exceeds the limits according to address 2914 **FFM Idelta (3p)** is not detected while all three phase currents are greater than the minimum current required for the impedance measurement by the distance protection according to address, a three-phase measured voltage failure is recognized. These settings can only be changed via DIGSI at **Display Additional Settings**.

In address 2910 **FUSE FAIL MON.** the “Fuse-Failure-Monitor”, e.g. during asymmetrical testing, can be switched ***OFF***.

Measured voltage failure monitoring

The measured voltage failure monitoring can be switched under address 2915 **V-Supervision** ***w/ CURR.SUP***, ***w/ I> & CBaux*** or ***OFF***. Address 2916 **T V-Supervision** is used to set the waiting time of the voltage failure supervision. This setting can only be changed in DIGSI at **Display Additional Settings**.

Monitoring the phase angle of the positive sequence power

The parameters 2943 **I1>** and 2944 **U1>** are used to specify the minimum positive sequence system quantities required for measurement of the positive sequence power. The angles set in address 2941 **φA** and 2942

φB must be at least 3° apart. Incorrect parameter settings cause the indication 132 *ϕ set wrong* to be output.

2.7.1.7 Settings

Addresses which have an appended "A" can only be changed with DIGSI, under "Additional Settings".
The table indicates region-specific presettings. Column C (configuration) indicates the corresponding secondary nominal current of the current transformer.

Addr.	Parameter	C	Setting Options	Default Setting	Comments
2901	MEASURE. SUPERV		ON OFF	ON	Measurement Supervision
2902A	BALANCE U-LIMIT		10 .. 100 V	50 V	Voltage Threshold for Balance Monitoring
2903A	BAL. FACTOR U		0.58 .. 0.95	0.75	Balance Factor for Voltage Monitor
2904A	BALANCE I LIMIT	1A	0.10 .. 1.00 A	0.50 A	Current Balance Monitor
		5A	0.50 .. 5.00 A	2.50 A	
2905A	BAL. FACTOR I		0.10 .. 0.95	0.50	Balance Factor for Current Monitor
2906A	ΣI THRESHOLD	1A	0.05 .. 2.00 A	0.10 A	Summated Current Monitoring Threshold
		5A	0.25 .. 10.00 A	0.50 A	
2907A	ΣI FACTOR		0.00 .. 0.95	0.10	Summated Current Monitoring Factor
2908A	T BAL. U LIMIT		5 .. 100 sec	5 sec	T Balance Factor for Voltage Monitor
2909A	T BAL. I LIMIT		5 .. 100 sec	5 sec	T Current Balance Monitor
2910	FUSE FAIL MON.		ON OFF	ON	Fuse Failure Monitor
2911A	FFM U>(min)		10 .. 100 V	30 V	Minimum Voltage Threshold U>
2912A	FFM I< (max)	1A	0.10 .. 1.00 A	0.10 A	Maximum Current Threshold I<
		5A	0.50 .. 5.00 A	0.50 A	
2913A	FFM U<max (3ph)		2 .. 100 V	15 V	Maximum Voltage Threshold U< (3phase)
2914A	FFM Idelta (3p)	1A	0.05 .. 1.00 A	0.10 A	Delta Current Threshold (3phase)
		5A	0.25 .. 5.00 A	0.50 A	
2915	V-Supervision		w/ CURR.SUP w/ I> & CBaux OFF	w/ CURR.SUP	Voltage Failure Supervision
2916A	T V-Supervision		0.00 .. 30.00 sec	3.00 sec	Delay Voltage Failure Supervision
2941	φA		0 .. 359 °	200 °	Limit setting PhiA
2942	φB		0 .. 359 °	340 °	Limit setting PhiB
2943	I1>	1A	0.05 .. 2.00 A	0.05 A	Minimum value I1>
		5A	0.25 .. 10.00 A	0.25 A	
2944	U1>		2 .. 70 V	20 V	Minimum value U1>

2.7.1.8 Information List

No.	Information	Type of Information	Comments
130	φ(PQ Pos. Seq.)	OUT	Load angle Phi(PQ Positive sequence)
131	φ(PQ Pos) block	OUT	Load angle Phi(PQ) blocked
132	φ Set wrong	OUT	Setting error: |PhiA - PhiB| < 3°
161	Fail I Superv.	OUT	Failure: General Current Supervision
162	Failure Σ I	OUT	Failure: Current Summation
163	Fail I balance	OUT	Failure: Current Balance
164	Fail U Superv.	OUT	Failure: General Voltage Supervision
165	Fail Σ U Ph-E	OUT	Failure: Voltage summation Phase-Earth
167	Fail U balance	OUT	Failure: Voltage Balance
168	Fail U absent	OUT	Failure: Voltage absent
169	VT FuseFail>10s	OUT	VT Fuse Failure (alarm >10s)
170	VT FuseFail	OUT	VT Fuse Failure (alarm instantaneous)
171	Fail Ph. Seq.	OUT	Failure: Phase Sequence
195	Fail Conductor	OUT	Failure: Broken Conductor
196	Fuse Fail M.OFF	OUT	Fuse Fail Monitor is switched OFF
197	MeasSup OFF	OUT	Measurement Supervision is switched OFF

2.7.2 Trip circuit supervision

2.7.2.1 Functional Description

Trip Circuit Supervision

The 7VK61 incorporates an integrated trip circuit supervision function. Depending on the number of available binary inputs (not connected to a common potential), supervision with one or two binary inputs can be selected. If the routing of the required binary inputs does not comply with the selected supervision mode, an alarm is issued (“TripC ProgFAIL”) with identification of the non-compliant circuit. When using two binary inputs, malfunctions in the trip circuit can be detected under all circuit breaker conditions. When only one binary input is used, malfunctions in the circuit breaker itself cannot be detected. If single-pole tripping is possible, a separate trip circuit supervision can be implemented for each circuit breaker pole provided the required binary inputs are available.

These which for the two binary inputs use binary inputs must have no common potential. Therefore, it must be ensured the use of external measures for the galvanic separation.

Supervision with Two Binary Inputs

When using two binary inputs, these are connected according to *Figure 2-59* parallel to the associated trip contact on one side, and parallel to the circuit breaker auxiliary contacts on the other.

A precondition for the use of the trip circuit supervision is that the control voltage for the circuit breaker is higher than the total of the minimum voltages drops at the two binary inputs ($U_{Ctrl} > 2 \cdot U_{BImin}$). Since at least 19 V are needed for each binary input, the supervision function can only be used with a system control voltage of over 38 V.

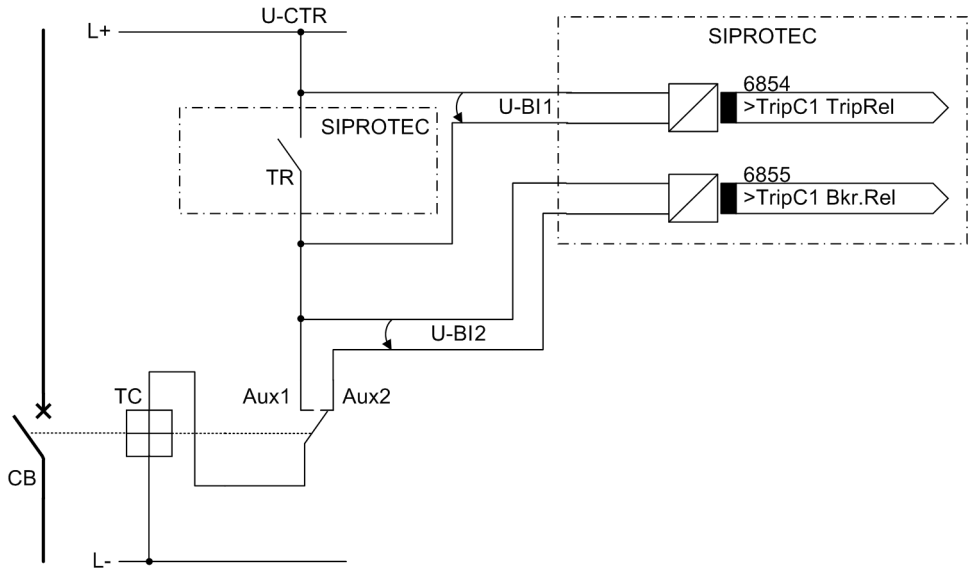

[prinzip-ausloesekrueb-2-be-wlk-010802, 1, en_GB]

Figure 2-59 Principle of the trip circuit supervision with two binary inputs

TR	Trip relay contact
CB	Circuit breaker
TC	Circuit breaker trip coil
Aux1	Circuit breaker auxiliary contact (NO contact)
Aux2	Circuit breaker auxiliary contact (NC contact)
U-CTR	Control voltage (trip voltage)
U-BI1	Input voltage of 1st binary input
U-BI2	Input voltage of 2nd binary input

Supervision with two binary inputs not only detects interruptions in the trip circuit and loss of control voltage, it also supervises the response of the circuit breaker using the position of the circuit breaker auxiliary contacts.

Depending on the conditions of the trip contact and the circuit breaker, the binary inputs are activated (logical condition “H” in the following table), or short-circuited (logical condition “L”).

A state in which both binary inputs are not activated (“L”) is only possible in intact trip circuits for a short transition period (trip relay contact closed but circuit breaker not yet open).

A continuous state of this condition is only possible when the trip circuit has been interrupted, a short-circuit exists in the trip circuit, a loss of battery voltage occurs, or malfunctions occur with the circuit breaker mechanism. Therefore, it is used as supervision criterion.

Table 2-6 Condition table for binary inputs, depending on RTC and CB position

No.	Trip Contact	Circuit Breaker	Aux 1	Aux 2	BI 1	BI 2	Dynamic State	Static State
1	open	ON	closed	open	H	L	Normal operation with circuit breaker closed	
2	open	OFF	open	closed	H	H	Normal operation with circuit breaker open	
3	closed	ON	closed	open	L	L	Transition or malfunction	Malfunction
4	closed	OFF	open	closed	L	H	TR has tripped successfully	

The conditions of the two binary inputs are checked periodically. A query takes place about every 500 ms. If three consecutive conditional checks detect an abnormality, a fault indication is output (see *Figure 2-60*). The repeated measurements determine the delay of the alarm message and avoid that an alarm is output during

short transition periods. After clearance of the failure in the trip circuit, the failure alarm automatically resets with the same time delay.

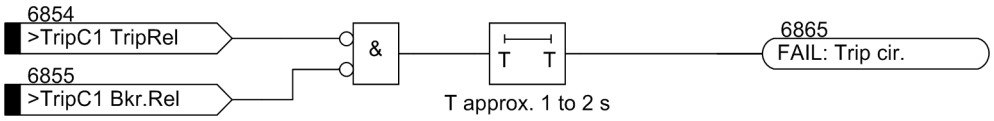

[logikdiagramm-auskruebrwchg-2-be-wlk-310702, 1, en_GB]

Figure 2-60 Logic diagram of the trip circuit supervision with two binary inputs

Supervision with One Binary Input

According to *Figure 2-61*, the binary input is connected in parallel to the respective command relay contact of the protection device. The circuit breaker auxiliary contact is bridged with a high-resistance bypass resistor R.

The control voltage for the circuit breaker should be at least twice as high as the minimum voltage drop at the binary input ($U_{Ctrl} > 2 \cdot U_{BImin}$). Since at least 19 V are needed for the binary input, the monitor can be used with a system control voltage of over 38 V.

A calculation example for the bypass resistor R is shown in the configuration notes in Section “Mounting and Connections”, margin heading “Trip Circuit Supervision”.

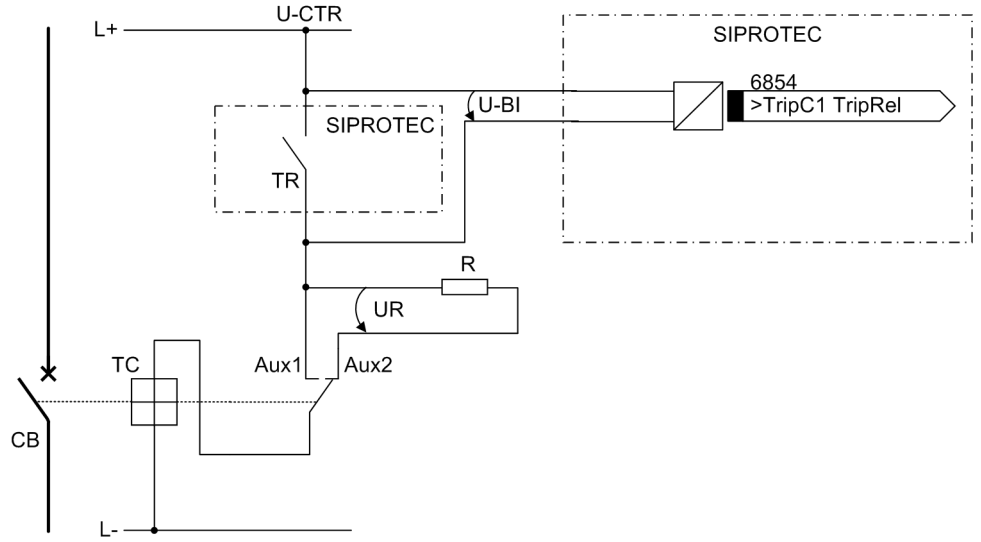

[prinzip-ausloesekrueb-1-be-wlk-010802, 1, en_GB]

Figure 2-61 Principle of the trip circuit supervision with one binary input

TR	Trip relay contact
CB	Circuit breaker
TC	Circuit breaker trip coil
Aux1	Circuit breaker auxiliary contact (NO contact)
Aux2	Circuit breaker auxiliary contact (NC contact)
U-CTR	Control voltage for trip circuit
U-BI	Input voltage of binary input
R	Bypass resistor
UR	Voltage across the bypass resistor

During normal operation, the binary input is activated (logical condition “H”) when the trip contact is open and the trip circuit is intact, because the supervision circuit is closed either by the circuit breaker auxiliary contact (if the circuit breaker is closed) or through the bypass resistor R. Only as long as the trip contact is closed, the binary input is short-circuited and thereby deactivated (logical condition “L”).

If the binary input is permanently deactivated during operation, an interruption in the trip circuit or a failure of the (trip) control voltage can be assumed.

The trip circuit supervision does not operate during system faults. A momentary closed tripping contact does not lead to a fault indication. If, however, other trip relay contacts from different devices are connected in parallel in the trip circuit, the fault indication must be delayed by **Alarm Delay** (see also *Figure 2-62*). After clearance of the failure in the trip circuit, the fault message automatically resets with the same time delay.

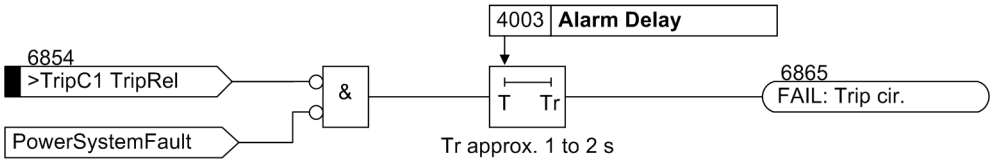

[logikdiagramm-auskruebrwchg-1-be-wlk-310702, 1, en_GB]

Figure 2-62 Logic diagram for trip circuit supervision with one binary input

2.7.2.2 Setting Notes

General

The number of circuits to be supervised was set during the configuration in address 140 **Trip Cir. Sup.** (Section *2.1.1.2 Setting Notes*). If the trip circuit supervision is not used at all, the setting ***Disabled*** must be applied there.

The trip circuit supervision can be switched in address 4001 **FCT TripSuperv.** ***ON*** or ***OFF***. The number of binary inputs that shall be used in each of the supervised circuits is set in address 4002 **No. of BI**. If the routing of the required binary inputs does not comply with the selected monitoring mode, an alarm is issued (*TripC ProgFAIL...* with identification of the non-compliant circuit).

Supervision with one binary input

The alarm for supervision with two binary inputs is always delayed by approx. 1s to 2s, whereas the delay time of the alarm for supervision with one binary input can be set in address 4003 **Alarm Delay**. If only the device 7VK61 is connected to the trip circuits 1 s to 2 s are sufficient, as the trip circuit supervision does not operate during a system fault. If, however, trip contacts from other devices are connected in parallel in the trip circuit, the alarm must be delayed such that the longest trip command duration can be reliably bridged.

2.7.2.3 Settings

Addr.	Parameter	Setting Options	Default Setting	Comments
4001	FCT TripSuperv.	ON OFF	OFF	TRIP Circuit Supervision is
4002	No. of BI	1 .. 2	2	Number of Binary Inputs per trip circuit
4003	Alarm Delay	1 .. 30 sec	2 sec	Delay Time for alarm

2.7.2.4 Information List

No.	Information	Type of Informa-tion	Comments
6854	>TripC1 TripRel	SP	>Trip circuit superv. 1: Trip Relay
6855	>TripC1 Bkr.Rel	SP	>Trip circuit superv. 1: Breaker Relay
6856	>TripC2 TripRel	SP	>Trip circuit superv. 2: Trip Relay
6857	>TripC2 Bkr.Rel	SP	>Trip circuit superv. 2: Breaker Relay
6858	>TripC3 TripRel	SP	>Trip circuit superv. 3: Trip Relay
6859	>TripC3 Bkr.Rel	SP	>Trip circuit superv. 3: Breaker Relay
6861	TripC OFF	OUT	Trip circuit supervision OFF
6865	FAIL: Trip cir.	OUT	Failure Trip Circuit
6866	TripC1 ProgFAIL	OUT	TripC1 blocked: Binary input is not set

No.	Information	Type of Information	Comments
6867	TripC2 ProgFAIL	OUT	TripC2 blocked: Binary input is not set
6868	TripC3 ProgFAIL	OUT	TripC3 blocked: Binary input is not set

2.8 Function Control and Circuit Breaker Test

2.8.1 Function Control

The function control is the control centre of the device. It coordinates the sequence of the protection and ancillary functions, processes their decisions and the information coming from the power system.

Applications

- Line energization recognition,
- Processing of the circuit breaker position,
- Open Pole Detector,
- Fault detection logic,
- Tripping logic.

2.8.1.1 Closure Detection

During energization of a protected object, several measures may be required or desirable. Following manual closing onto a short-circuit, for instance, immediate re-opening of the circuit breaker is usually desired. For most short-circuit protection functions, at least one stage can be selected to trip without delay following energization as described in the corresponding sections.

The manual closing command must be indicated to the device via a binary input. In order to be independent of the individual manual actuation, the command is set to a defined length in the device (adjustable with the address 1150 **`SI Time Man.Cl`**). This setting can only be changed in DIGSI at display **Additional Settings**. *Figure 2-63* shows the logic diagram.

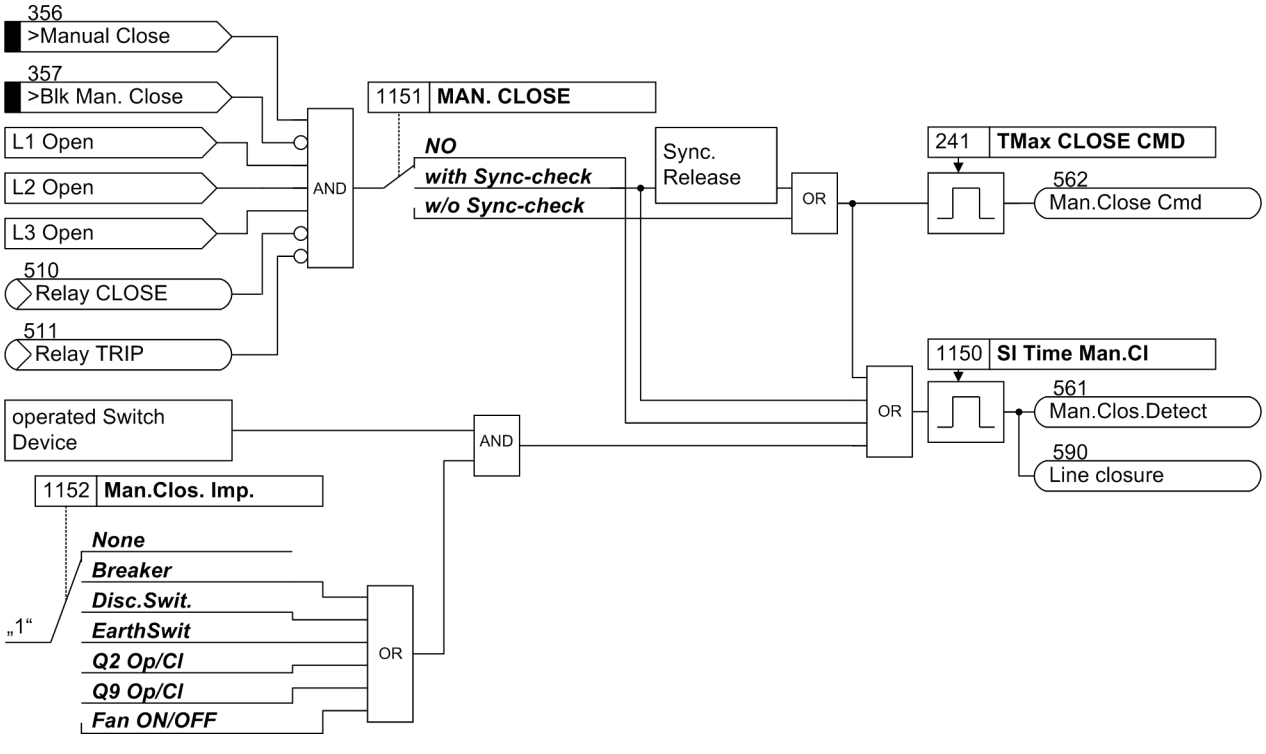

Figure 2-63 Logic diagram of the manual closing procedure

Reclosure via the integrated control functions - on-site control, control via DIGSI, control via serial interface - can have the same effect as manual closure, see parameter 1152 Section *2.1.5.1 Setting Notes* at margin heading “Circuit Breaker Status”.

If the device has an integrated automatic reclosure, the integrated manual closure logic of the 7VK61 automatically distinguishes between an external control command via the binary input and an automatic reclosure by the internal automatic reclosure so that the binary input *>Manual Close* can be connected directly to the control circuit of the close coil of the circuit breaker (*Figure 2-64*). Each closing operation that is not initiated by the internal automatic reclosure function is interpreted as a manual closure, even it has been initiated by a control command from the device.

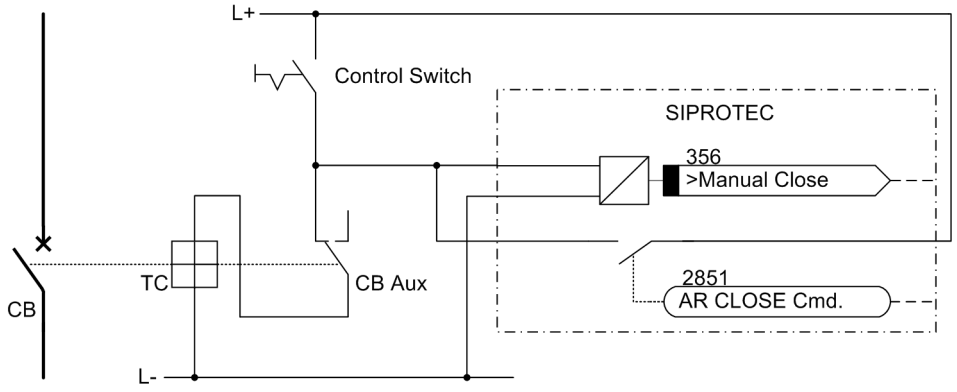

[hand-ein-mit-we-wlk-010802, 1, en_GB]

Figure 2-64 Manual closure with internal automatic reclosure

LS	Circuit breaker
LSS	Circuit breaker close coil
LS-HiKo	Circuit breaker auxiliary contact

If, however, external close commands which should not activate the manual close function are possible (e.g. external reclosure device), the binary input *>Manual Close* must be triggered by a separate contact of the control switch (*Figure 2-65*).

If in the latter case a manual close command can also be given by means of an internal control command from the device, such a command must be combined with the manual CLOSE function via parameter 1152 **`Man.Clos. Imp.`** (*Figure 2-63*).

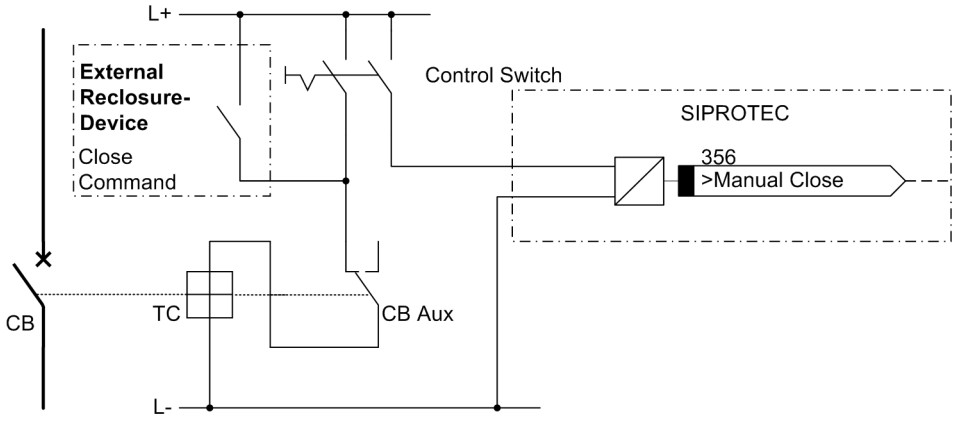

[hand-ein-mit-ext-we-wlk-010802, 1, en_GB]

Figure 2-65 Manual closing with external automatic reclosure device

LS	Circuit breaker
LSS	Circuit breaker close coil
LS-HiKo	Circuit breaker auxiliary contact

2.8.1.2 Detection of the Circuit Breaker Position

For Protection Purposes

Information regarding the circuit breaker position is required by various protection and supplementary functions to ensure their optimal functionality. This is, for example, of assistance for

- The circuit breaker failure protection (refer to Section *2.6 Circuit breaker failure protection (optional)*),
- Verification of the dropout condition for the trip command (see Section "Terminating the Trip Signal").

The device is equipped with a circuit breaker position logic (*Figure 2-66*) which offers different options depending on the type of auxiliary contacts provided by the circuit breaker and on how they are connected to the device.

In most cases it is sufficient to report the status of the circuit breaker with its auxiliary contacts to the device via binary input. This always applies if the circuit breaker is only switched 3-pole. Then the NO auxiliary contact of the circuit breaker is connected to a binary input which must be configured to the input function *>CB 3p Closed* (No. 379). The other inputs are then not used and the logic is restricted in principle to simply forwarding the input information.

If the circuit breaker poles can be switched individually, and only a parallel connection of the NO individual pole auxiliary contacts is available, the relevant binary input (BI) is allocated to the function *>CB 3p Open* (no. 380). The remaining inputs are not used in this case.

If the circuit breaker poles can be switched individually and if the individual auxiliary contacts are available, an individual binary input should be used for each auxiliary contact if this is possible and if the device can and is to trip 1-pole. With this configuration, the device can process the maximum amount of information. Three binary inputs are used for this purpose:

- *>CB Aux. L1* (No. 351) for the auxiliary contact of pole L1,
- *>CB Aux. L2* (No. 352) for the auxiliary contact of pole L2,
- *>CB Aux. L3* (No. 353) for the auxiliary contact of pole L3,

The inputs No. 379 and No. 380 are not used in this case.

If the circuit breaker can be switched individually, two binary inputs are sufficient if both the parallel as well as series connection of the auxiliary contacts of the three poles are available. In this case, the parallel connection of the auxiliary contacts is routed to the input function *>CB 3p Closed* (No.379) and the series connection is routed to the input function „*>CB 3p Open* (No. 380).

Please note that *Figure 2-66* shows the complete logic for all connection alternatives. For each particular application, only a portion of the inputs is used as described above.

The eight output signals of the circuit breaker position logic can be processed by the individual protection and supplementary functions. The output signals are blocked if the signals transmitted from the circuit breaker are not plausible: for example, the circuit breaker cannot be open and closed at the same time. Furthermore, no current can flow over an open breaker contact.

The evaluation of the measuring quantities is according to the local conditions of the measuring points (see Section *2.1.5.1 Setting Notes* at margin heading "Circuit Breaker Status").

The phase currents are available as measuring quantities. A flowing current excludes that the circuit breaker is open (exception: A fault between current transformer and circuit breaker). If the circuit breaker is closed, it may, however, still occur that no current is flowing. The decisive setting for the evaluation of the measuring quantities is **PoleOpenCurrent** (address 1130) for the presence of the currents.

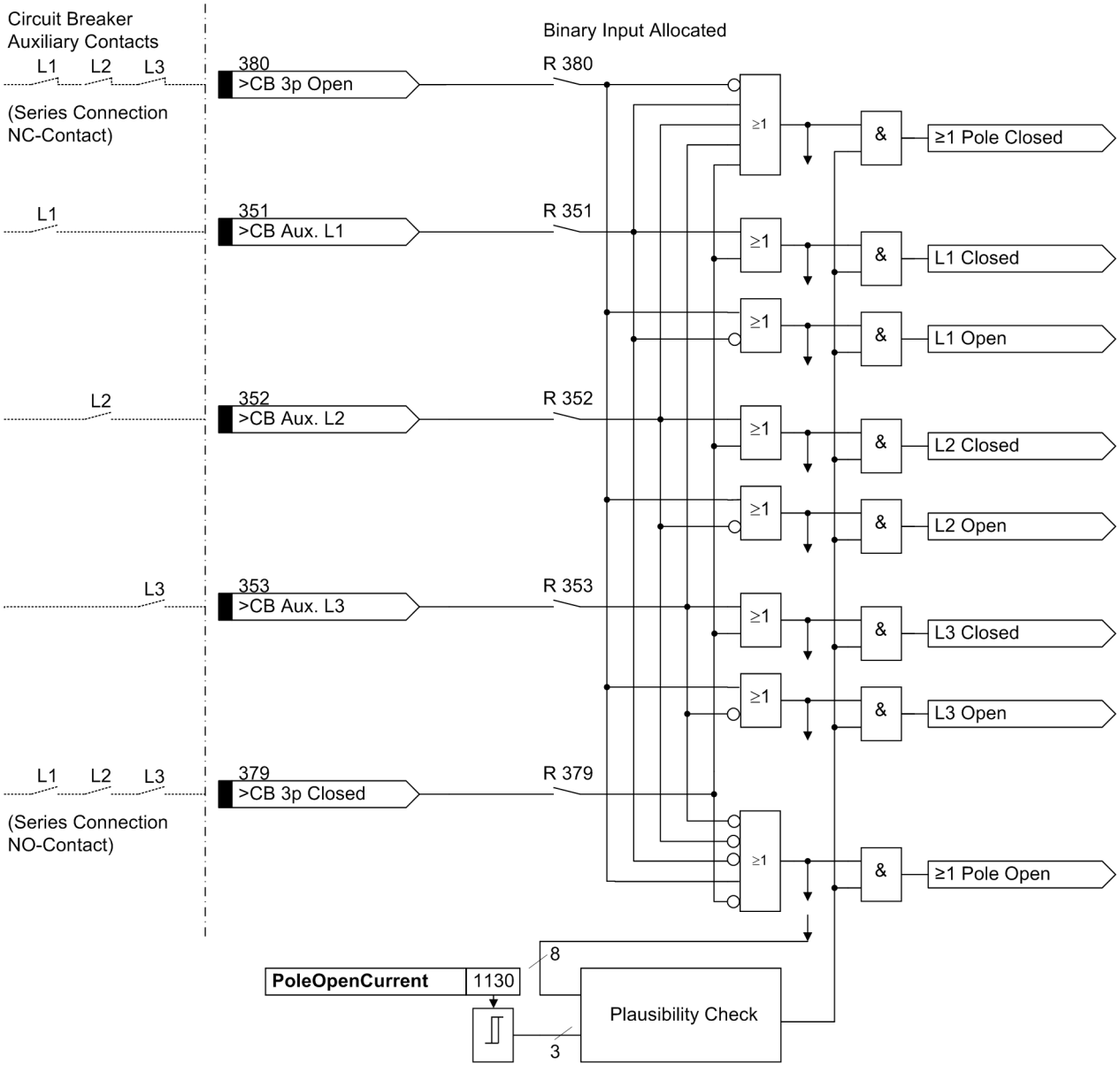

[logik-ls-stellung-wlk-020802, 1, en_GB]

Figure 2-66 Circuit breaker position logic

For automatic reclosure and circuit breaker test

Separate binary inputs comprising information on the position of the circuit breaker are available for the automatic reclosure and the circuit breaker test. This is important for

- The plausibility check before automatic reclosure (refer to Section *2.2 Automatic reclosure function (optional)*),
- the trip circuit check with the help of the TRIP–CLOSE–test cycle (refer to Section *2.8.2 Circuit breaker trip test*).

When using $1^1/_2$ or 2 circuit breakers in each feeder, the automatic reclosure function and the circuit breaker test refer to **one** circuit breaker. The feedback information of this circuit breaker can be connected separately to the device.

For this, separate binary inputs are available, which should be treated the same and configured additionally if necessary. These have a similar significance as the inputs described above for protection applications and are marked with "CB1 ..." to distinguish them, i.e.:

- *>CB1 3p Closed* (No. 410) for the series connection of the NO auxiliary contacts of the CB,
- *>CB1 3p Open* (No. 411) for the series connection of the NC auxiliary contacts of the CB,
- *>CB1 Pole L1* (No. 366) for the auxiliary contact of pole L1,
- *>CB1 Pole L2* (No. 367) for the auxiliary contact of pole L2,
- *>CB1 Pole L3* (No. 368) for the auxiliary contact of pole L3,

2.8.1.3 Open Pole Detektor

Besides the evaluation of the CB auxiliary contacts, single-pole dead times can be detected and reported via the Open Pole Detector. This, however, requires the three-pole connection of currents and voltages. The corresponding protection and monitoring function can respond. The following figure shows the logic structure of an Open Pole Detector.

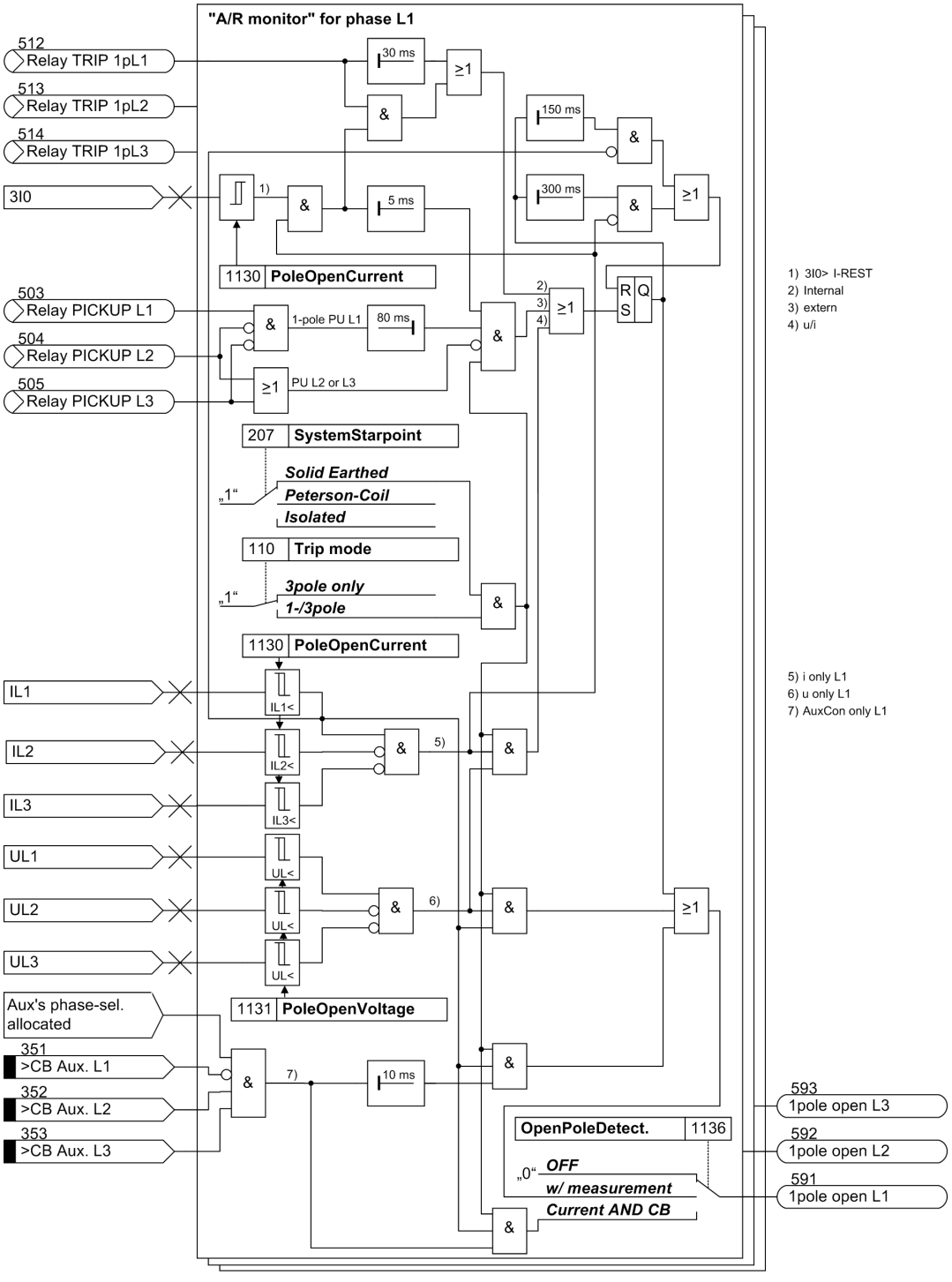

[logik-open-pole-detek-wlk-120902, 1, en_GB]

Figure 2-67 Open pole detector logic

1-pole dead time

During a 1-pole dead time, the load current flowing in the two healthy phases forces a current flow via earth which may cause undesired pickup. The raising zero- sequence voltage can also produce undesired responses of the functions.

The indications *1pole open L1* (No. 591), *1pole open L2* (No. 592) and *1pole open L3* (No. 593) are additionally generated if the “Open Pole Detector” detects that current and voltage are absent in one phase –

while current flow is detected in both other phases. In this case, one of the indications will only be maintained while the condition is met. This enables a single-pole automatic reclosure to be detected on an unloaded line.

Specially for applications with busbar side voltage transformers the indication *1pole open Lx* is additionally transmitted if the phase-selective CB auxiliary contacts clearly show a single-pole open circuit breaker, and the current of the affected phase falls below the parameter 1130 **PoleOpenCurrent**.

Depending on the setting of parameter 1136 **OpenPoleDetect.** the Open Pole Detector evaluates all available measured values including the auxiliary contacts (default setting ***w/ measurement***) or it processes only the information from the auxiliary contacts including the phase current values (setting ***Current AND CB***). To disable the Open Pole Detector, set parameter 1136 to ***OFF***.

2.8.1.4 Pickup Logic of the Entire Device

Phase Segregated Fault Detection

The fault detection logic combines the fault detection (pickup) signals of all protection functions. In the case of those protection functions that allow for phase segregated pickup, the pickup is output in a phase segregated manner. If a protection function detects an earth fault, this is also output as a common device alarm. Thus, the alarms *Relay PICKUP L1*, *Relay PICKUP L2*, *Relay PICKUP L3* and *Relay PICKUP E* are available.

The above annunciations can be allocated to LEDs or output relays.

General Pickup

The pickup signals are combined with OR and lead to a general pickup of the device. It is signalled with *Relay PICKUP*. If no function of the device is picked up any longer, *Relay PICKUP* disappears (indication "OFF").

General device pickup is a precondition for a series of internal and external functions that occur subsequently. The following are among the internal functions controlled by general device pickup:

- Opening of a trip log: from general device pickup to general device dropout, all fault indications are entered in the trip log.
- Initialization of fault record: the storage and maintenance of fault values can also be made dependent on the occurrence of a trip command.
- Generation of spontaneous indications: Certain fault indications can be displayed as spontaneous indications (see margin heading "Spontaneous Indications"). In addition, this indication can be made dependent on the general device trip.
- Start action time of automatic reclosure (if available and used).

External functions may be controlled by this indication via an output contact. Examples are:

- Channel boost in conjunction with signal transmission by PLC.
- Further additional devices or similar.

Spontaneous Displays

Spontaneous indications are fault indications which appear in the display automatically following a general fault detection or trip command of the device. For the 7VK61, these indications include:

"Relay PICKUP":	Protection function that picked up;
PU Time:	Operating time from the general pickup to the dropout of the device, in ms;
TRIP Time:	the operating time from general pickup to the first trip command of the device, in ms;

2.8.1.5 Tripping Logic of the Entire Device

General Trip

All trip signals for the functions are connected by OR and generate the message *Relay TRIP*. This can be allocated to LED or output relay.

Terminating the Trip Signal

Once a trip command is initiated, it is phase segregatedly latched (in the event of three-pole tripping for each of the three poles) (refer to *Figure 2-68*). At the same time, the minimum trip command duration **TMin TRIP CMD** (address 240) is started. This ensures that the trip command is output to the circuit breaker for a sufficiently long time even if the tripping protection function resets very rapidly. The trip commands can only be reset after all tripping protection functions have dropped out and after the minimum trip command duration has elapsed.

A further condition for the reset of the trip command is that the circuit breaker has opened, in the event of singlepole tripping the relevant circuit breaker pole. In the function control of the device, this is checked by means of the circuit breaker position feedback (Section "Detection of the Circuit Breaker Position") and the flow of current. In address 1130 **PoleOpenCurrent**, the residual current threshold which may definitely not be exceeded when the circuit breaker pole is open, is set. Address 1135 **Reset Trip CMD** determines under which conditions a trip command is reset. If ***CurrentOpenPole*** is set, the trip command is reset as soon as the current disappears. It is important that the value set in address 1130 **PoleOpenCurrent** (see above) is undershot. If ***Current AND CB*** is set, the circuit breaker auxiliary contact must send a message that the circuit breaker is open. It is a prerequisite for this setting that the position of the auxiliary contact is allocated via a binary input. If this additional condition is not required for resetting the trip command (e.g. if test sockets are used for protection testing), it can be switched off with the setting Pickup Reset.

If the 7VK61 relay is operated without current transformer connection, the setting1135 **Reset Trip CMD** = ***CurrentOpenPole*** termination of the trip command is only determined by the minimum trip time (**TMin TRIP CMD**). If the setting is **Reset Trip CMD** = ***Current AND CB*** the trip command will be terminated by the auxiliary contacts of the circuit breaker.

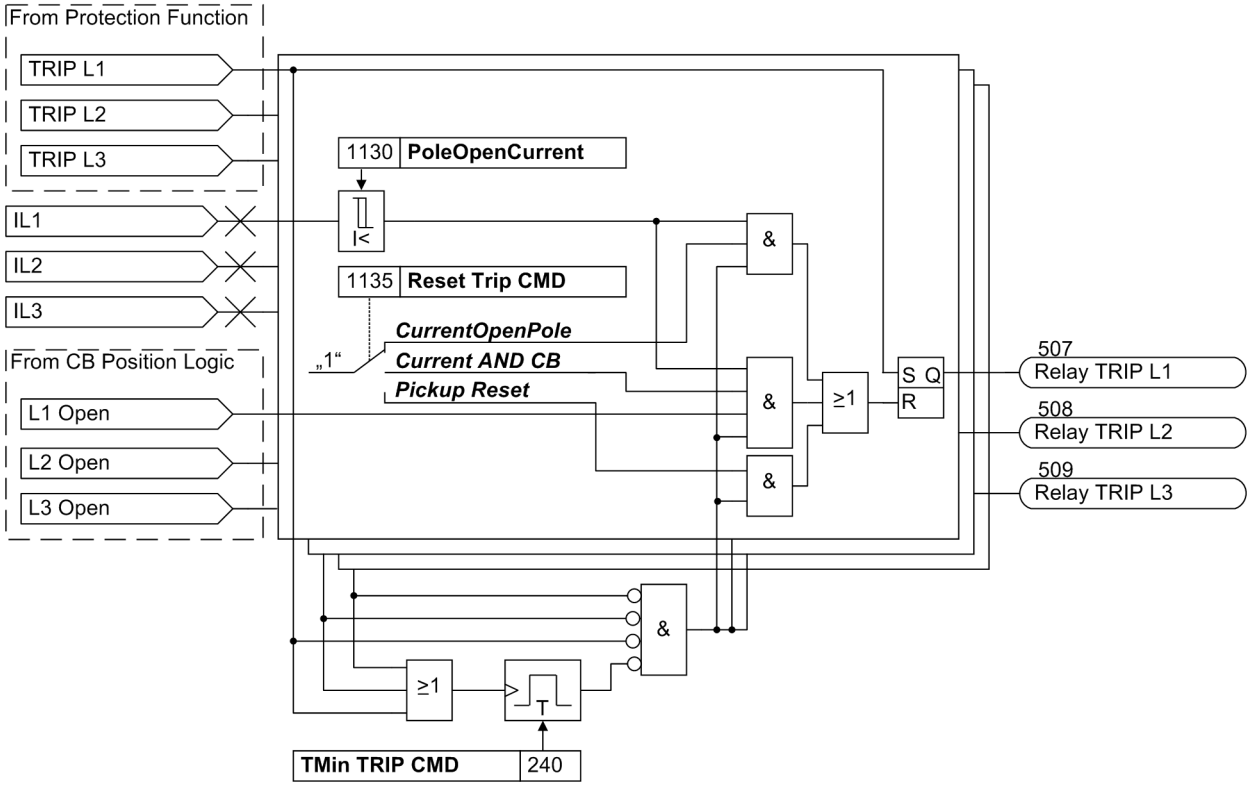

[logik-speich-absteuer-ausloese-wlk-020802, 1, en_GB]

Figure 2-68 Storage and termination of the trip command

Reclosure Interlocking

When a protection function has tripped the circuit breaker, it is often desired to prevent reclosing until the tripping cause has been found. 7VK61 enables this via the integrated reclosure interlocking.

The interlocking state ("LOCKOUT") will be realized by an RS flipflop which is protected against auxiliary voltage failure (*Figure 2-69*). The RS flipflop is set via binary input *>Lockout SET* (No. 385). With the output

alarm *LOCKOUT* (No. 530), if interconnected correspondingly, a reclosure of the circuit breaker (e.g. for automatic reclosure, manual close signal, synchronization, closing via control) can be blocked. Only once the cause for the protection operation is known, should the interlocking be reset by a manual reset via binary input *>Lockout RESET* (No. 386).

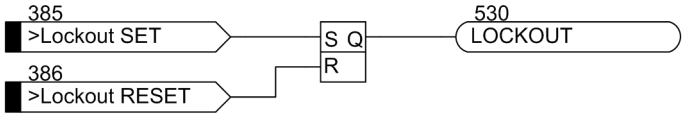

[logik-we-verriegelung-wlk-020802, 1, en_GB]

Figure 2-69 Reclosure Interlocking

Conditions which cause reclosure interlocking and control commands which have to be interlocked can be set individually. The two inputs and the output can be wired via the correspondingly allocated binary inputs and outputs or be linked via user-defined logic functions (CFC).

If, for example, each trip by the protection function has to cause a closing lock-out, then combine the tripping command *Relay TRIP* (No. 511) with the locking input *>Lockout SET*. If automatic reclosure is used, only the final trip of the protection function should activate reclosing lock-out. Remember that the indication *Definitive TRIP* (No. 536) only continues 500 ms. Then c *Definitive TRIP* (No. 536) with the interlocking input *>Lockout SET*, so that the interlocking is not activated if an automatic reclosure is still expected.

You can configure the output indication *LOCKOUT* (No 530) in the simplest case without other links to the same output that operated the trip of the circuit breaker. Then the tripping command is maintained until the interlock is reset via the reset input. This requires the close coil at the circuit breaker to be blocked as usual for as long as a tripping command is maintained.

The output indication *LOCKOUT* can also be applied to interlock certain closing commands (externally or via CFC), e.g. by combining the output alarm with the binary input *>Blk Man. Close* (No. 357) or by connecting the inverted alarm with the bay interlocking of the feeder.

The reset input*>Lockout RESET* (No. 386) resets the interlocking state. This input is initiated by an external device which is protected against unauthorized or unintentional operation. The interlocking state can also be controlled by internal sources using CFC, e.g. a function key, operation of the device or using DIGSI on a PC.

For each case please ensure that the corresponding logic operations, security measures, etc. are taken into account when routing the binary inputs and outputs and may have to be considered when creating the user-defined logic functions. See also the SIPROTEC 4 System Description.

Breaker Tripping Alarm Suppression

On feeders without automatic reclosure, every trip command by a protection function is final. But when using automatic reclosure, it is desired that the operation detector of the circuit breaker (fleeting contact at the breaker) should only generate an alarm if the trip of the breaker is final (*Figure 2-70*).

To accomplish this, the signal from the circuit breaker can be routed via an output contact of the 7VK61 (output alarm *CB Alarm Supp*, No. 563) that is configured accordingly. In the idle state and when the device is turned off, this contact is closed. This requires that a normally closed contact is allocated. Which contact is to be allocated depends on the device version. See also the general views in the Appendix.

Prior to a trip command with the internal automatic reclosure in the ready state, the contact opens so that the tripping of the circuit breaker is not passed on. This is only the case if the device is equipped with internal automatic reclosure and if the latter was taken into consideration when configuring the protection functions (address 133).

Also when closing the breaker via the binary input *>Manual Close* (No. 356) or via the integrated automatic reclosure the contact is interrupted so that the breaker alarm is inhibited.

Further optional closing commands which are not sent via the device are not taken into consideration. Closing commands for control can be linked to the alarm suppression via the user-defined logic functions (CFC).

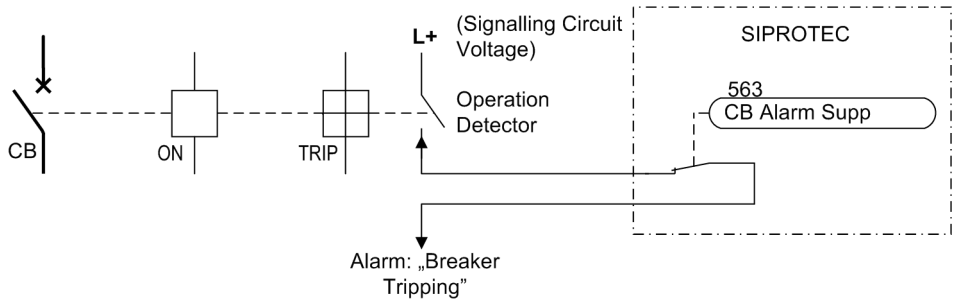

[schalterfall-meldeunterdrueck-wlk-020802, 1, en_GB]

Figure 2-70 Breaker tripping alarm suppression

If the device issues a final trip command, the contact remains closed. This is the case, during the reclaim time of the automatic reclosure cycle, when the automatic reclosure is blocked or switched off or, due to other reasons is not ready for automatic reclosure (e.g. tripping only occurred after the action time expired).

Figure 2-71 shows time diagrams for manual trip and close as well as for short-circuit tripping with a single, failed automatic reclosure cycle.

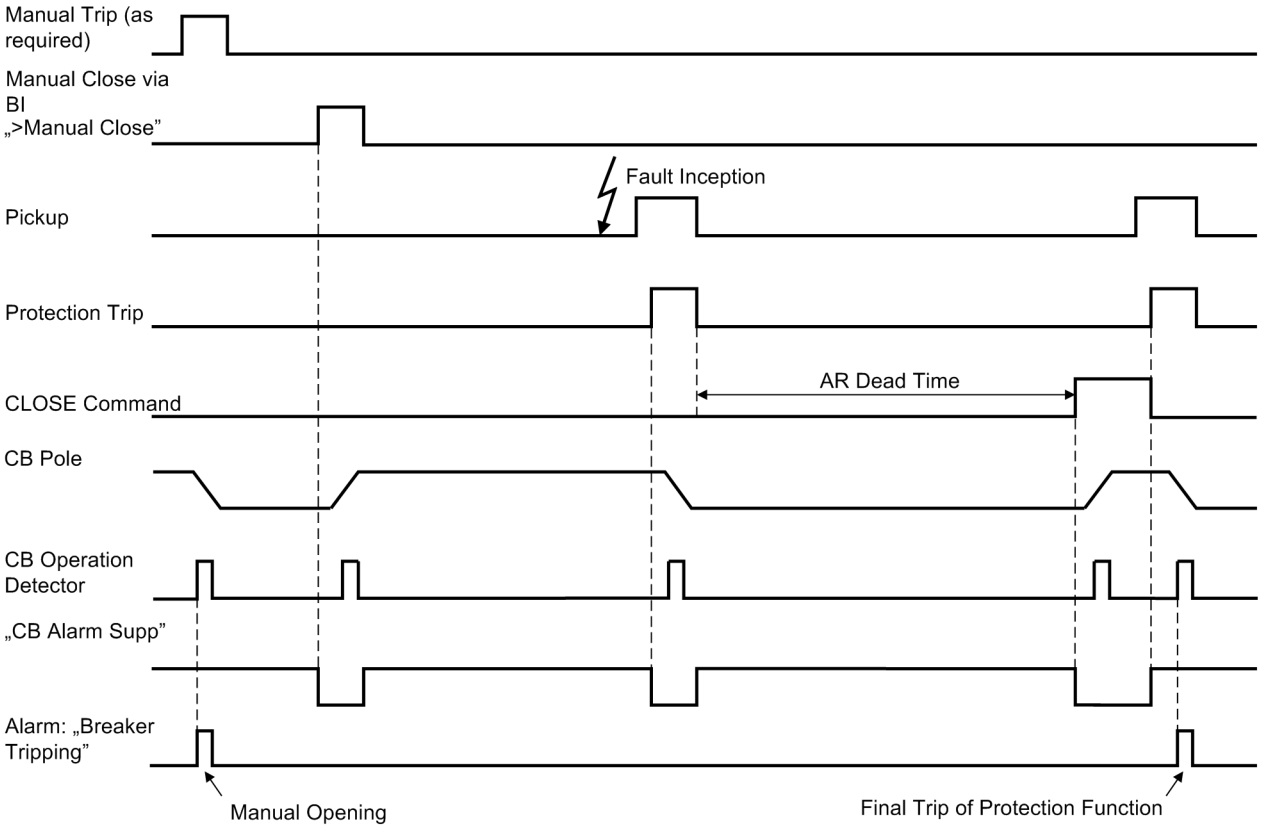

[schalterfall-meldeunterdrueck-ablauf-wlk-020802, 1, en_GB]

Figure 2-71 Breaker tripping alarm suppression — sequence examples

2.8.2 Circuit breaker trip test

The 7VK61 breaker management relay allows for convenient testing of the trip circuits and the circuit breakers.

2.8.2.1 Function Description

The test programs shown in *Table 2-7* are available. The single-pole tests are of course only possible if the device you are using is capable of single-pole tripping.

The output alarms mentioned must be allocated to the relevant command relays that are used for controlling the circuit breaker coils.

The test is started using the operator panel on the front of the device or using the PC with DIGSI. The procedure is described in detail in the SIPROTEC 4 System Description. *Figure 2-72* shows the progression over time of an open-close test cycle. The set times are those stated in Section *2.1.3.1 Setting Notes* for "Trip Command Duration" and "Circuit Breaker Test".

Where the circuit breaker auxiliary contacts indicate the status of the circuit breaker or of its poles to the device via binary inputs, the test cycle can only be initiated if the circuit breaker is closed.

The information regarding the position of the circuit breakers is not automatically derived from the position logic according to the above section. For the circuit breaker test function (auto recloser) there are separate binary inputs for the switching status feedback of the circuit breaker position. These must be taken into consideration when allocating the binary inputs as mentioned in the previous section.

The alarms of the device show the respective state of the test sequence.

Table 2-7 Circuit breaker test programs

Serial No.	Test Programs	Circuit Breaker	Output Indications (No.)
1	1-pole TRIP/CLOSE-cycle phase L1	CB 1	CB1-TESTtrip L1 (7325)
2	1-pole TRIP/CLOSE-cycle phase L2		CB1-TESTtrip L2 (7326)
3	1-pole TRIP/CLOSE-cycle phase L3		CB1-TESTtrip L3 (7327)
4	3-pole TRIP/CLOSE-cycle		CB1-TESTtrip 123 (7328)
	Associated close command		CB1-TEST CLOSE (7329)

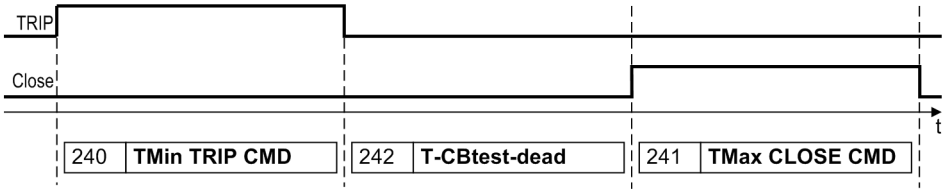

[ein-aus-pruefzyklus-wlk-170902, 1, en_GB]

Figure 2-72 TRIP-CLOSE test cycle

2.8.2.2 Information List

No.	Information	Type of Information	Comments
-	CB1tst L1	-	CB1-TEST trip/close - Only L1
-	CB1tst L2	-	CB1-TEST trip/close - Only L2
-	CB1tst L3	-	CB1-TEST trip/close - Only L3
-	CB1tst 123	-	CB1-TEST trip/close Phases L123
7325	CB1-TESTtrip L1	OUT	CB1-TEST TRIP command - Only L1
7326	CB1-TESTtrip L2	OUT	CB1-TEST TRIP command - Only L2
7327	CB1-TESTtrip L3	OUT	CB1-TEST TRIP command - Only L3
7328	CB1-TESTtrip123	OUT	CB1-TEST TRIP command L123
7329	CB1-TEST close	OUT	CB1-TEST CLOSE command
7345	CB-TEST running	OUT	CB-TEST is in progress

No.	Information	Type of Information	Comments
7346	CB-TSTstop FLT.	OUT_Ev	CB-TEST canceled due to Power Sys. Fault
7347	CB-TSTstop OPEN	OUT_Ev	CB-TEST canceled due to CB already OPEN
7348	CB-TSTstop NOTr	OUT_Ev	CB-TEST canceled due to CB was NOT READY
7349	CB-TSTstop CLOS	OUT_Ev	CB-TEST canceled due to CB stayed CLOSED
7350	CB-TST .OK.	OUT_Ev	CB-TEST was successful

2.9 Auxiliary Functions

The additional functions of the 7VK61 breaker management relay include:

- processing of messages,
- processing of operational measured values,
- storage of fault record data.

2.9.1 Processing of Messages

After the occurrence of a system fault, data regarding the response of the protection relay and the measured quantities should be saved for future analysis. For this reason message processing is done in three ways:

2.9.1.1 Functional Description

Indicators and Binary Outputs (Output Relays)

Important events and states are displayed by LEDs on the front cover. The device also contains output relays for remote signaling. Most indications and displays can be configured differently from the delivery default settings (for information on the delivery default setting see Appendix). The SIPROTEC 4 System Description gives a detailed description of the configuration procedure.

The output relays and the LEDs may be operated in a latched or unlatched mode (each may be individually set).

The latched conditions are protected against loss of the auxiliary voltage. They are reset

- On site by pressing the LED key on the relay,
- Remotely using a binary input configured for that purpose,
- via one of the serial interfaces,
- Automatically at the beginning of a new pickup.

Status messages should not be latched. Also, they cannot be reset until the criterion to be reported is remedied. This applies to, e.g., indications from monitoring functions, or the like.

A green LED displays operational readiness of the relay (“RUN”); it cannot be reset. It extinguishes if the self-check feature of the microprocessor detects an abnormal occurrence, or if the auxiliary voltage fails.

When auxiliary voltage is present but the relay has an internal malfunction, the red LED (“ERROR”) lights up and the processor blocks the relay.

DIGSI enables you to selectively control each output relay and LED of the device and, in doing so, check the correct connection to the system. In a dialog box, you can, for instance, cause each output relay to pick up, and thus test the wiring between the 7VK61 and the system without having to create the indications masked to it.

Information on the Integrated Display (LCD) or to a Personal Computer

Events and conditions can be read out on the display on the front panel of the relay. Using the front operator interface or the rear service interface, for instance, a personal computer can be connected, to which the information can be sent.

In the quiescent state, i.e. as long as no system fault is present, the LCD can display selectable operational information (overview of the operational measured values) (default display). In the event of a system fault, information regarding the fault, the so-called spontaneous displays, are displayed instead. After the fault indications have been acknowledged, the quiescent data are shown again. Acknowledgement is accomplished by pressing the LED buttons on the front panel (see above).

Figure 2-73 shows an example of a preset default display.

Various default displays can be selected via the arrow keys. Parameter 640 can be set to change the default setting for the default display page shown in idle state. Two examples of possible default display selections are given below.

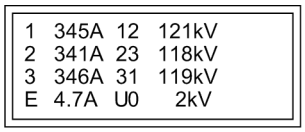

Example:

IL1	= 345 A	UL1-L2	= 121 kV
IL2	= 341 A	UL2-L3	= 118 kV
IL3	= 346 A	UL3-L1	= 119 kV
IE (3I0)	= 4.7 A	U0	= 2 kV

[beispiel-grundb-4-zeil-disp-wlk-210802, 1, en_GB]

Figure 2-73 Operational measured values in the default display

Default display 3 shows the measured power values and the measured values U_{L1-L2} and I_{L2} dargestellt.

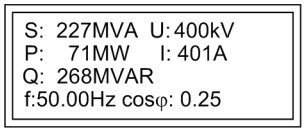

Example:

S	= 227 MVA	UL1-L2	= 400 kV
P	= 71 MW	IL2	= 401 A
Q	= 268 MVAR		
f	= 50.00 Hz	cos φ	= 0.25

[grundb-3-4-zeil-displ-wlk-230802, 1, en_GB]

Figure 2-74 Operational measured values in the default display

Moreover, the device has several event buffers for operational indications, fault indications, switching statistics, etc., which are protected against loss of auxiliary supply by means of a backup battery. These indications can be displayed on the LCD at any time by selection using the keypad or transferred to a personal computer via the serial service or operator interface. Reading out indications during operation is described in detail in the SIPROTEC 4 System Description.

After a system fault, for example, important information about the progression of the fault can be retrieved, such as the pickup of a protection stage or the initiation of a trip signal. The system clock accurately provides the absolute time when the fault first occurred. The fault progression is output with a relative time referred to the instant of pickup so that the time until tripping and until reset of the trip command can be recognized. The resolution of the time information is 1 ms.

With a PC and the DIGSI protection data processing software, it is also possible to retrieve and display the events with the convenience of visualisation on a monitor and a menu-guided dialog. The data can either be printed out or stored elsewhere for later evaluation.

The protection device stores the messages of the last eight system faults; in the event of a ninth fault, the oldest is erased.

A system fault starts with the detection of the fault by the fault detection of any protection function and ends with the reset of the fault detection of the last protection function or after the expiry of the auto-reclose reclaim time, so that several unsuccessful reclose cycles are also stored cohesively. Accordingly a system fault may contain several individual fault events (from fault detection up to reset of fault detection).

Information to a Control Centre

If the device has a serial system interface, stored information may additionally be transferred via this interface to a central control and storage device. Transmission is possible via different transmission protocols.

You may test whether the indications are transmitted correctly with DIGSI.

Also the information transmitted to the control centre can be influenced during operation or tests. The IEC 60870-5-103 protocol allows to identify all indications and measured values transferred to the central control system with an added indication “test mode” while the device is being tested on site (test mode). This identification prevents the indications from being incorrectly interpreted as resulting from an actual power system disturbance or event. Alternatively, you may disable the transmission of indications to the system interface during tests “Transmission Block”).

To influence information at the system interface during test mode (“test mode” and “transmission block”), a CFC logic is required. Default settings already include this logic (see Appendix).

The SIPROTEC 4 System Description describes in detail how to activate and deactivate test mode and blocked data transmission.

Classification of Indications

Indications are classified as follows:

- Operational indications: messages generated while the device is in operation: They include information about the status of device functions, measurement data, system data, and similar information.
- Fault indications: messages from the last eight system faults that were processed by the device.
- Indications on Statistics: they include counters for the switching actions of the circuit breakers initiated by the device, maybe reclose commands as well as values of interrupted currents and accumulated fault currents.

A complete list of all indications and output functions generated by the device with the associated information number (No.) can be found in the Appendix. This list also indicates where each indication can be sent. If certain functions are not avaiable in a device version with reduced function scope or if they are configured as in the function scope, then the associated indications will not appear.

Operational Indications

Operational indications contain information generated by the device during operation about operational conditions.

Up to 200 operational indications are recorded in chronological order in the device. Newly generated indications are added to those already present. If the maximum capacity of the memory has been exceeded, the oldest indication will be overwritten.

Operational indications arrive automatically and can be read out from the device display or a personal computer at any time. Faults in the power system are indicated with “Network Fault” and the present fault number. The fault indications contain detailed information on the response during system faults.

Fault Indications

Following a system fault it is possible to retrieve important information regarding its progress, such as pickup and trip. The system clock accurately provides the absolute time when the fault first occurred. The fault progression is output with a relative time referred to the instant of pickup so that the time until tripping and until reset of the trip command can be recognized. The resolution of the time information is 1 ms.

A system fault starts with the recognition of a fault by the fault detection, i.e. first pickup of any protection function, and ends with the reset of the fault detection, i.e. dropout of the last protection function. Where a fault causes several protection functions to pick up, the fault is considered to include all that occurred between pickup of the first protection function and dropout of the last protection function.

Spontaneous Displays

After a fault, the device displays automatically and without any operator action on its LCD display the most important fault data from the general device pickup in the sequence shown in the following figure.

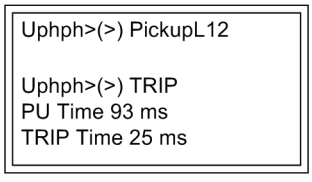

[anzeig-spontan-meld-displ-oz-251102, 1, en_GB]

Figure 2-75 Display of spontaneous messages in the display — Example

Retrievable Indications

The indications of the last eight system faults can be retrieved and read out. A total of 600 indications can be stored. The oldest indications are erased for the newest fault indications when the buffer is full.

Spontaneous Indications

Spontaneous indications contain information that new indications have arrived. Each new incoming indication appears immediately, i.e. the user does not have to wait for an update or initiate one. This can be a useful help during operation, testing and commissioning.

Spontaneous indications can be read out via DIGSI. For more information see the SIPROTEC 4 System Description.

General Interrogation

The present condition of the SIPROTEC 4 device can be retrieved via DIGSI by viewing the contents of the General Interrogation. It shows all indications that are subject to general interrogation with their current value.

2.9.2 Statistics

Counting includes the number of trips initiated by 7VK61, the accumulated breaking currents resulting from trips initiated by protection functions, the number of close commands initiated by the auto-reclosure function.

2.9.2.1 Functional Description

Counters and Memories

The counters and memories of the statistics are saved by the device. Therefore, the information will not get lost in case the auxiliary voltage supply fails. The counters, however, can be reset to zero or to any value within the setting range.

Switching statistics can be viewed on the LCD of the device, or on a PC running DIGSI and connected to the operating or service interface.

A password is not required to read switching statistics; however, a password is required to change or delete the statistics. For more information see the SIPROTEC 4 System Description.

Number of trips

The number of trips initiated by the device 7VK61 is counted. If the device is capable of single-pole tripping, a separate counter for each circuit breaker pole is provided.

Number of automatic reclosing commands

If the device is equipped with the integrated automatic reclosure, the automatic close commands are also counted, separately for reclosure after 1-pole tripping, after 3-pole tripping as well as separately for the first reclosure cycle and other reclosure cycles.

Interrupted currents

Furthermore, for each trip command the interrupted current for each pole is acquired, output in the trip log and accumulated in a memory. The maximum interrupted current is stored as well. The indicated measured values are indicated in primary values.

2.9.2.2 Setting Notes

Reading/Setting/Resetting

The SIPROTEC 4 System Description describes how to read out the statistical counters via the device front panel or DIGSI. Setting or resetting of these statistical counters takes place under the menu item **INDICATIONS** -> **STATISTICS** by overwriting the counter values displayed.

2.9.2.3 Information List

No.	Information	Type of Information	Comments
1000	# TRIPs=	VI	Number of breaker TRIP commands
1001	TripNo L1=	VI	Number of breaker TRIP commands L1
1002	TripNo L2=	VI	Number of breaker TRIP commands L2
1003	TripNo L3=	VI	Number of breaker TRIP commands L3
1027	Σ IL1 =	VI	Accumulation of interrupted current L1

No.	Information	Type of Information	Comments
1028	Σ IL2 =	VI	Accumulation of interrupted current L2
1029	Σ IL3 =	VI	Accumulation of interrupted current L3
1030	Max IL1 =	VI	Max. fault current Phase L1
1031	Max IL2 =	VI	Max. fault current Phase L2
1032	Max IL3 =	VI	Max. fault current Phase L3
2895	AR #Close1./1p=	VI	No. of 1st AR-cycle CLOSE commands,1pole
2896	AR #Close1./3p=	VI	No. of 1st AR-cycle CLOSE commands,3pole
2897	AR #Close2./1p=	VI	No. of higher AR-cycle CLOSE commands,1p
2898	AR #Close2./3p=	VI	No. of higher AR-cycle CLOSE commands,3p

2.9.3 Measurement

2.9.3.1 Functional Description

Display of Measured Values

Depending on the ordering code, connection of the device and configured protection functions, only some of the operational measured values listed in *Table 2-8* may be available. Phase-to-earth voltages can only be measured if the phase-to-earth voltage inputs are connected. The displacement voltage 3 U_0 is the e-n voltage multiplied with $\sqrt{3}$ – if U_{en} is connected – or calculated from the phase-to-earth voltages $3U_0 = |\underline{U}_{L1} + \underline{U}_{L2} + \underline{U}_{L3}|$. This requires the three voltage inputs phase-to-earth to be connected. The zero-sequence voltage U_0 indicates the voltage between the delta center and earth.

If the device features synchronism and voltage check and if, when configuring the functions (address 135) these functions were set as ***Enabled*** and the parameter **U4 transformer** (address210) to ***Usy2 transf.***, you can read out the characteristic values (voltages, frequencies, differences).

The power and operating values upon delivery are set such that power in line direction is positive, active components in line direction and inductive reactive components in line direction are positive. The same applies for the power factor cosφ. It is occasionally desired to define the power draw from the line (e.g. as seen from the consumer) positively. Using parameter address 1107 **P,Q sign** the signs for these components can be inverted.

The computation of the operational measured values is also executed during an existent system fault in intervals of approx. 0.5 s.

Table 2-8 Operational measured values of the local device

Measured values		Primary	secondary	% referred to
I_{L1}, I_{L2}, I_{L3}	Phase currents	A	A	Rated operational current [1)]
$3I_0$ - calculated	Earth current	A	A	Rated operational current [1)]
$3I_0$ - measured	Earth current	A	A	Rated operational current [3)1)]
I1, I2	Positive and negative sequence component of currents	A	A	Rated operational current [1)]
U_{L1-E}, U_{L2-E}, U_{L3-E}	Phase-to-earth voltages	kV	V	Rated operational voltage / $\sqrt{3}$ [2)]
U_{L1-L2}, U_{L2-L3}, U_{L3-L1}	Phase-to-phase voltages	kV	V	Rated operational voltage [2)]
$3U_0$	Displacement Voltage	kV	V	Rated operational voltage / $\sqrt{3}$ [2)]
U_0	Zero-sequence voltage	kV	V	Rated operational voltage / $\sqrt{3}$ [2)]
U_1, U_2	Positive and negative sequence component of voltages	kV	V	Rated operational voltage / $\sqrt{3}$ [2)]

U_X, U_{en}	Voltage at measuring input U_4	-	V	-
U_{sy2}	Voltage at measuring input U_4	kV	V	Rated operational voltage or Rated operational voltage / $\sqrt{3}$[2)4)5)]
S, P, Q	Apparent, active and reactive power	MVA, MW, MVAR	—	$\sqrt{3} \cdot U_N \cdot I_N$nominal operating quantities[1)2)]
f	Frequency	Hz	Hz	Nominal Frequency
cos φ	Power factor	(abs)	(abs)	—
U_{sy1}, U_{sy2}, U_{diff}	Line voltage, busbar voltage and voltage difference (for synchronism check)	kV	—	—
f_{sy1}, f_{sy2}, f_{diff}	Line voltage, busbar frequency and voltage difference (for synchronism check)	Hz	—	—
φ_{diff}	Amount of phase angle difference between line and busbar (for synchronism check)	°	—	—

[1)] acc. to address 1104

[2)] acc. to address 1103

[3)] considering factor 221 **`I4/Iph CT`**

[4)] acc. to address 212 **`Usy2 connection`**

[5)] considering factor 215 **`Usy1/Usy2 ratio`**

he computation of the operational measured values is also executed during an existent system fault in intervals of approx. 0.5s

2.9.3.2 Information List

No.	Information	Type of Information	Comments
601	IL1 =	MV	I L1
602	IL2 =	MV	I L2
603	IL3 =	MV	I L3
610	3I0 =	MV	3I0 (zero sequence)
619	I1 =	MV	I1 (positive sequence)
620	I2 =	MV	I2 (negative sequence)
621	UL1E=	MV	U L1-E
622	UL2E=	MV	U L2-E
623	UL3E=	MV	U L3-E
624	UL12=	MV	U L12
625	UL23=	MV	U L23
626	UL31=	MV	U L31
627	Uen =	MV	Uen
631	3U0 =	MV	3U0 (zero sequence)
632	Usy2=	MV	Measured value Usy2
633	Ux =	MV	Ux (separate VT)
634	U1 =	MV	U1 (positive sequence)
635	U2 =	MV	U2 (negative sequence)
636	Udiff =	MV	Measured value U-diff (Usy1- Usy2)
637	Usy1=	MV	Measured value Usy1

No.	Information	Type of Information	Comments
638	Usy2=	MV	Measured value Usy2
641	P =	MV	P (active power)
642	Q =	MV	Q (reactive power)
643	PF =	MV	Power Factor
644	Freq=	MV	Frequency
645	S =	MV	S (apparent power)
646	F-sy2 =	MV	Frequency fsy2
647	F-diff=	MV	Frequency difference
648	φ-diff=	MV	Angle difference
649	F-sy1 =	MV	Frequency fsy1
684	U0 =	MV	U0 (zero sequence)

2.9.4 Energy

Metered values for active and reactive power are determined in the background by the processor system. They can be called up at the front of the device, read out via the operating interface using a PC with DIGSI, or transferred to a central master station via the system interface.

2.9.4.1 Energy Metering

7VK61 integrates the calculated power as a function of time and then provides the results under the measured values. The components as listed in *Table 2-9* can be read out. The signs of the operating values depend on the setting at address 1107 **`P,Q sign`** (see Section *2.9.3 Measurement* under margin heading“Display of Measured Values”).

Please take into consideration that 7VK61 is, above all, a protection device. The accuracy of the metered values depends on the instrument transformers (normally protection core) and the device tolerances. The metering is therefore not suited for tariff purposes.

The counters can be reset to zero or any initial value (see also SIPROTEC 4 System Description).

Table 2-9 Operational metered values

Measured values		Primary
W_p+	Active power, output	kWh, MWh, GWh
W_p-	Active power, input	kWh, MWh, GWh
W_q+	Reactive power, output	kVARh, MVARh, GVARh
W_q-	Reactive power, input	kVARh, MVARh, GVARh

2.9.4.2 Setting Notes

Retrieving Parameters

The SIPROTEC System Description describes in detail how to read out the statistical counters via the device front panel or DIGSI. The values are added up in direction of the protected object Provided the direction was configured as “forward” (address 201).

2.9.4.3 Information List

No.	Information	Type of Information	Comments
-	Meter res	IntSP_Ev	Reset meter

No.	Information	Type of Informa-tion	Comments
888	Wp(puls)	PMV	Pulsed Energy Wp (active)
889	Wq(puls)	PMV	Pulsed Energy Wq (reactive)
924	Wp+=	MVMV	Wp Forward
925	Wq+=	MVMV	Wq Forward
928	Wp-=	MVMV	Wp Reverse
929	Wq-=	MVMV	Wq Reverse

2.10 Command Processing

The SIPROTEC 4 7VK61 includes a command processing for initiating switching operations in the system. Control can originate from four command sources:

- Local operation using the keypad on the local user interface of the device,
- Operation using DIGSI,
- Remote operation using a substation automation and control system (e.g. SICAM),
- Automatic functions (e.g. using binary inputs, CFC).

The number of switchgear devices that can be controlled is basically limited by the number of available and required binary inputs and outputs. For the output of control commands it has to be ensured that all the required binary inputs and outputs are configured and provided with the correct properties.

If specific interlocking conditions are needed for the execution of commands, the user can program the device with bay interlocking by means of the user-defined logic functions (CFC). The interlocking conditions of the system can be injected via the system interface and must be allocated accordingly.

The procedure for switching resources is described in the SIPROTEC 4 System Description under Control of Switchgear.

2.10.1 Control Authorization

2.10.1.1 Type of Commands

Commands to the Process

These commands are directly output to the switchgear to change their process state:

- Commands for the operation of circuit breakers (asynchronous; or synchronized through integration of the synchronism check and closing control function) as well as commands for the control of isolators and earth switches.
- Step commands, e.g. for raising and lowering transformer taps,
- Setpoint commands with configurable time settings, e.g. to control arc-suppression coils.

Device-internal Commands

These commands do not directly operate binary outputs. They serve for initiating internal functions, communicating the detection of status changes to the device or for acknowledging them.

- Manual override commands for “manual update”of information on process-dependent objects such as annunciations and switching states, e.g. if the communication with the process is interrupted. Manually overridden objects are marked as such in the information status and can be displayed accordingly.
- Tagging commands (for “setting”) the information value of internal objects, such as switching authority (remote/local), parameter changeovers, blocking of transmission and deletion/presetting of metered values.
- Acknowledgment and resetting commands for setting and resetting internal buffers or data stocks.
- Information status commands to set/delete the additional “Information Status” item of a process object, such as
  - Acquisition blocking,
  - Output blocking.

2.10.1.2 Sequence in the Command Path

Safety mechanisms in the command sequence ensure that a switch command can only be released after a thorough check of preset criteria has been successfully concluded. Additionally, user-defined interlocking

conditions can be configured separately for each device. The actual execution of the command is also monitored after its release. The entire sequence of a command is described briefly in the following list:

Checking a Command Execution

Please observe the following:

- Command entry, e.g. using the keypad on the local user interface of the device
  - Check password → access rights;
  - Check switching mode (interlocking activated/deactivated) → selection of deactivated interlocking status.
- User configurable interlocking checks:
  - Switching authority;
  - Device position check (set vs. actual comparison);
  - Zone controlled / bay interlocking (logic using CFC);
  - System interlocking (centrally via SICAM);
  - Double operation (interlocking against parallel switching operation);
  - Protection blocking (blocking of switching operations by protection functions);
  - Checking the synchronism before a close command.
- Fixed commands:
  - Internal process time (software watch dog which checks the time for processing the control action between initiation of the control and final close of the relay contact);
  - Configuration in process (if setting modification is in process, commands are rejected or delayed);
  - Equipment present as output;
  - Output block (if an output block has been programmed for the circuit breaker, and is active at the moment the command is processed, then the command is rejected);
  - Component hardware malfunction;
  - Command in progress (only one command can be processed at a time for each circuit breaker or switch);
  - 1–of–n check (for multiple allocations such as common contact relays or multiple protection commands configured to the same contact it is checked if a command procedure was already initiated for the output relays concerned or if a protection command is present. Superimposed commands in the same switching direction are tolerated).

Command Execution Monitoring

The following is monitored:

- Interruption of a command because of a cancel command,
- Running time monitor (feedback monitoring time).

2.10.1.3 Interlocking

Interlocking can be executed by the user-defined logic (CFC). Switchgear interlocking checks in a SICAM/ SIPROTEC 4 system are normally divided in the following groups:

- System interlocking checked by a central control system (for interbay interlocking),
- Zone controlled/bay interlocking checked in the bay device (for the feeder).
- Cross-bay interlocking via GOOSE messages directly between bay controllers and protection relays (with rollout of IEC 61850; inter-relay communication by GOOSE messaging is performed via the EN100 module)

System interlocking is based on the process image in the central device. Zone controlled/bay interlocking relies on the object database (feedback information) of the bay unit (here the SIPROTEC 4 relay) as was determined during configuration (see SIPROTEC 4 System Description).

The extent of the interlocking checks is determined by the configuration and interlocking logic of the relay. For more information on GOOSE messaging, please refer to the SIPROTEC 4 System Description.

Switching objects that require system interlocking in a central control system are marked by a specific parameter inside the bay unit (via configuration matrix).

For all commands, operation with interlocking (normal mode) or without interlocking (test mode) can be selected:

- For local commands by reprogramming the settings with password check,
- For automatic commands, via command processing by CFC and Deactivated Interlocking Recognition,
- For local/remote commands, using an additional interlocking disable command via PROFIBUS.

Interlocked/non-interlocked Switching

The configurable command checks in the SIPROTEC 4 devices are also called “standard interlocking”. These checks can be activated via DIGSI (interlocked switching/tagging) or deactivated (non-interlocked).

De-interlocked or non-interlocked switching means that the configured interlock conditions are not tested.

Interlocked switching means that all configured interlocking conditions are checked within the command processing. If a condition could not be fulfilled, the command will be rejected by an indication with a minus added to it, e.g. “CO–”, followed by an operation response information. The command is rejected if a synchronism check is carried out before closing and the conditions for synchronism are not fulfilled.
Table 2-10 shows some types of commands and indications. The indications marked with *) are displayed only in the event logs on the device display; for DIGSI they appear in spontaneous indications.

Table 2-10 Command types and corresponding indications

Type of Command	Control	Cause	Indication
Control issued	Switching	CO	CO+/–
Manual tagging (positive/negative)	Manual tagging	MT	MT+/–
Information state command, Input blocking	Input blocking	ST	ST+/– *)
Information state command, Output blocking	Output blocking	ST	ST+/– *)
Cancel command	Cancel	CA	CA+/–

The plus sign in the indication is a confirmation of the command execution: The command output has a positive result, as expected. A minus sign means a negative, i.e. an unexpected result. The command was rejected. *Figure 2-76* shows an example for successful switching of the circuit breaker in the Event Log (command and feedback).

The check of interlocking can be programmed separately for all switching devices and tags that were set with a tagging command. Other internal commands such as overriding or abort are not tested, i.e. are executed independently of the interlockings.

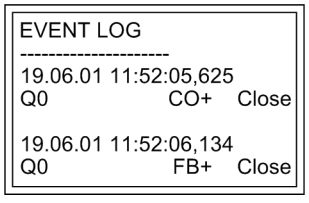

[leistungsschalterbetriebsmeldung-020315-wlk, 1, en_GB]

Figure 2-76 Example of an operational indication for switching circuit breaker (Q0)

Standard Interlocking

The standard interlocking includes the checks for each switchgear which were set during the configuration of inputs and outputs, see SIPROTEC 4 System Description.

An overview for processing the interlocking conditions in the relay is shown in *Figure 2-77*.

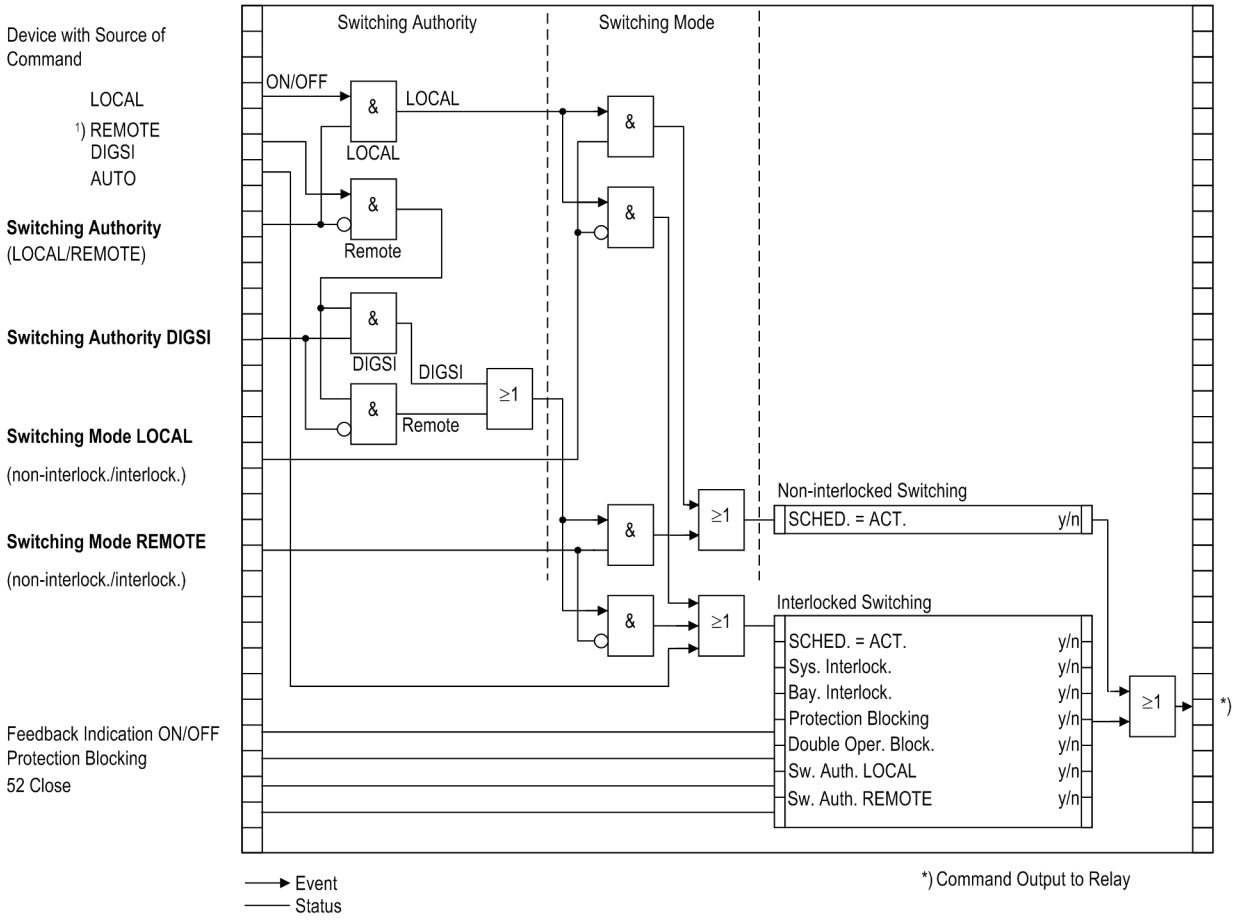

[standardveriegelungen-wlk-020802, 1, en_GB]

Figure 2-77 Standard interlockings

1) Source of Command REMOTE includes LOCAL.

(NAH Command using substation controller

FERN Command via telecontrol station to power system management and from power system management to the device)

The display shows the configured interlocking reasons. They are marked by letters as explained in *Table 2-11* .

Table 2-11 Interlocking Commands

Interlocking Commands	Command (abbreviation)	Display
Control Authority	SV	S
System Interlocking	AV	A
Bay Interlocking	BI	F
SET = ACTUAL (switch direction check)	SI	I
Protection Blockage	SB	B

Figure 2-78 shows all interlocking conditions (which usually appear in the display of the device) for three switchgear items with the relevant abbreviations explained in Table . *Table 2-11* explained abbreviations. All parameterized interlocking conditions are indicated.

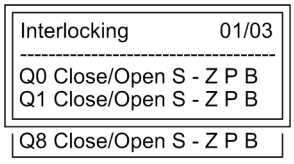

[verriegelungsbed-020315-wlk, 1, en_GB]

Figure 2-78 Example of configured interlocking conditions

Control Logic via CFC

For bay interlocking, a release logic can be created using CFC. Via specific release conditions the information “released” or “bay interlocked” are available, e.g. object “Release CD Close” and “Release CD Open” with the information values: ON/OFF).

2.10.1.4 Information List

No.	Information	Type of Informa-tion	Comments
-	ModeREMOTE	IntSP	Controlmode REMOTE
-	Cntrl Auth	IntSP	Control Authority
-	ModeLOCAL	IntSP	Controlmode LOCAL

2.10.2 Control Device

Switchgear can be controlled via the device operator panel, PC interface and the serial interface as well as a connection to the control system for switchgear with single and double busbars.

The number of switchgear devices to be controlled is limited by the number of binary inputs and outputs.

2.10.2.1 Functional Description

Operation via integrated control panel

Using the navigation keys ▲, ▼, ◄, ►the control menu can be accessed and the switchgear to be operated selected. After entering a password, a new window is displayed where multiple control options (ON, OFF, ABORT) are available using the ▼ and ▲ Then a safety query appears. Only after repeated confirmation using the **ENTER** key is the command action performed. If this enabling does not occur within one minute, the process is aborted. Cancellation via the **ESC** key is possible at any time before the control command is issued or during breaker selection.

If the attempted command fails, because an interlocking condition is not met, an error message appears in the display. The message indicates why the control command was not accepted (see also SIPROTEC 4 System Description). This annunciation must be acknowledged with **ENTER** before further operation of the unit is possible.

Operation using DIGSI

Switchgear devices can be controlled via the operator control interface with a PC using the DIGSI operating program. The procedure to do so is described in the SIPROTEC 4 System Description (Control of Switchgear).

Operation Using the System Interface

Control of switching devices can be performed via the serial system interface and a connection to the switchgear control and protection system. Please check MLFB order number to ensure that your individual relay has a SCADA interface module that supports this. Furthermore, certain settings for the serial interface in the device need to be carried out (see SIPROTEC 4 System Description).

2.10.2.2 Information List

No.	Information	Type of Information	Comments
-	Breaker	CF_D12	Breaker
-	Breaker	DP	Breaker
-	Disc.Swit.	CF_D2	Disconnect Switch
-	Disc.Swit.	DP	Disconnect Switch
-	EarthSwit	CF_D2	Earth Switch
-	EarthSwit	DP	Earth Switch
-	Brk Open	IntSP	Interlocking: Breaker Open
-	Brk Close	IntSP	Interlocking: Breaker Close
-	Disc.Open	IntSP	Interlocking: Disconnect switch Open
-	Disc.Close	IntSP	Interlocking: Disconnect switch Close
-	E Sw Open	IntSP	Interlocking: Earth switch Open
-	E Sw Cl.	IntSP	Interlocking: Earth switch Close
-	Q2 Op/Cl	CF_D2	Q2 Open/Close
-	Q2 Op/Cl	DP	Q2 Open/Close
-	Q9 Op/Cl	CF_D2	Q9 Open/Close
-	Q9 Op/Cl	DP	Q9 Open/Close
-	Fan ON/OFF	CF_D2	Fan ON/OFF
-	Fan ON/OFF	DP	Fan ON/OFF
31000	Q0 OpCnt=	VI	Q0 operationcounter=
31001	Q1 OpCnt=	VI	Q1 operationcounter=
31002	Q2 OpCnt=	VI	Q2 operationcounter=
31008	Q8 OpCnt=	VI	Q8 operationcounter=
31009	Q9 OpCnt=	VI	Q9 operationcounter=

2.10.3 Process Data

During the processing of commands, independently of the further allocation and processing of indications, command and process feedbacks are sent to the indication processing. These indications contain information on the cause. With the corresponding allocation (configuration) these indications are entered in the event log, thus serving as a report.

A listing of possible operational indications and their meaning, as well as the command types needed for tripping and closing the switchgear or for raising and lowering transformer taps and detailed information are described in the SIPROTEC 4 System Description.

2.10.3.1 Functional Description

Acknowledgement of Commands to the Device Front

All indications with the source of command LOCAL are transformed into a corresponding response and shown in the display of the device.

Acknowledgement of commands to local/remote/DIGSI

The acknowledgement of indications which relate to commands with the origin “Command Issued = Local/Remote/DIGSI” are sent back to the initiating point independent of the routing (configuration on the serial digital interface).

The acknowledgement of commands is therefore not executed by a response indication as it is done with the local command but by ordinary command and feedback information recording.

Feedback monitoring

Command processing time monitors all commands with feedback. Parallel to the command, a monitoring time period (command runtime monitoring) is started which checks whether the switchgear has achieved the desired final state within this period. The monitoring time is stopped as soon as the feedback information arrives. If no feedback information arrives, a response *Time Limit Expired* appears and the process is terminated.

Commands and their feedbacks are also recorded as operational indications. Normally the execution of a command is terminated as soon as the feedback information (**FB+**) of the relevant switchgear arrives or, in case of commands without process feedback information, the command output resets.

In the feedback, the plus sign means that a command has been positively completed. The command was as expected, in other words positive. The "minus" is a negative confirmation and means that the command was not executed as expected.

Command output/switching relays

The command types needed for tripping and closing of the switchgear or for raising and lowering transformer taps have been defined during the configuration, see also SIPROTEC 4 System Description.

2.10.3.2 Information List

No.	Information	Type of Information	Comments
-	>Door open	SP	>Cabinet door open
-	>CB wait	SP	>CB waiting for Spring charged
-	>Err Mot U	SP	>Error Motor Voltage
-	>ErrCntrlU	SP	>Error Control Voltage
-	>SF6-Loss	SP	>SF6-Loss
-	>Err Meter	SP	>Error Meter
-	>Tx Temp.	SP	>Transformer Temperature
-	>Tx Danger	SP	>Transformer Danger

2.10.4 Protocol

During the processing of the commands, independent of the further message routing and processing, command and process feedback information are sent to the message processing centre. These messages contain information on the cause. With the corresponding allocation (configuration) these messages are entered in the event list, thus serving as a report.

Prerequisites

A listing of possible operating messages and their meaning as well as the command types needed for tripping and closing of the switchgear or for raising and lowering of transformer taps are described in the SIPROTEC 4 System Description.

2.10.4.1 Information List

No.	Information	Type of Information	Comments
-	SysIntErr.	IntSP	Error Systeminterface

3 Mounting and Commissioning

This chapter is primarily intended for experienced commissioning engineers. The commissioning engineer must be familiar with the commissioning of protection and control systems, with the management of power systems and with the relevant safety rules and guidelines. Under certain circumstances adaptations of the hardware to the particular power system data may be necessary. The primary tests require the protected object (line, transformer etc.) to carry load.

3.1	Mounting and Connections	178
3.2	Checking Connections	203
3.3	Commissioning	208
3.4	Final Preparation of the Device	223

3.1 Mounting and Connections

General



WARNING

Warning of improper transport, storage, installation, and application of the device.

Non-observance can result in death, personal injury or substantial property damage.

- ✧ Trouble free and safe use of this device depends on proper transport, storage, installation, and application of the device according to the warnings in this instruction manual.
- ✧ Of particular importance are the general installation and safety regulations for work in a high-voltage environment (for example, VDE, IEC, EN, DIN, or other national and international regulations). These regulations must be observed.

3.1.1 Configuration Information

Prerequisites

For installation and connections the following conditions must be met:

The rated device data has been tested as recommended in the SIPROTEC 4 System Description and their compliance with the Power System Data is verified.

Connection Variants

General Diagrams are shown in Appendix *B Terminal Assignments*. Connection examples for current transformer and voltage transformer circuits are provided in Appendix *C Connection Examples*. It must be checked that the setting of the **`P.System Data 1`**, Section *2.1.3.1 Setting Notes*, was made in accordance to the device connections.

Currents

Appendix *C Connection Examples* shows current transformer connection examples in dependence on network conditions.

For normal connection, address 220 **`I4 transformer`** = ***`In prot. line`*** must be set and furthermore, address 221 **`I4/Iph CT`** = ***`1.000`***.

When using separate earth current transformers, address 220 **`I4 transformer`** = ***`In prot. line`*** must be set. The setting value of the address 221 **`I4/Iph CT`** may deviate from ***`1`***. For information on the calculation, please refer to section *2.1.3.1 Setting Notes*.

Please observe that 2 CT-connection is permitted only for isolated or compensated networks.

Voltages

Connection examples for current and voltage transformer circuits are provided in Appendix *C Connection Examples*.

For the normal connection the 4th voltage measuring input is not used; correspondingly the address must be set to 210 **`U4 transformer`** = ***`Not connected`***.

For an additional connection of an e-n-winding of a set of voltage transformers, the address 210 **`U4 transformer`** = ***`Udelta transf.`*** must be set. The setting value of the address **`Uph / Udelta`** depends on the transformation ratio of the e–n-winding. For additional hints, please refer to Section *2.1.3.1 Setting Notes* under “Transformation Ratio”.

In further connection examples also the e–n winding of a set of voltage transformers is connected, in this case, however of a central set of transformers at a busbar. For more information refer to the previous paragraph.

Further figures show examples for the additional connection of a different voltage, in this case the busbar voltage (e.g. for voltage protection or synchronism check). For the voltage protection the address 210 **U4 transformer** = ***Ux transformer*** has to be set, **U4 transformer** = ***Usy2 transf.*** for the synchronism check. The address 215 **Usy1/Usy2 ratio** is only then not equal to ***1*** when feeder transformer and busbar transformer have a different transformation ratio. .

If there is a power transformer between the set of busbar voltage transformers and the set of feeder voltage transformers, the phase displacement of the voltage caused by the power transformer must be compensated for the synchronism check if used. In this case also check the addresses 212 **Usy2 connection**, 214 **φ Usy2-Usy1** and 215 **Usy1/Usy2 ratio**. You will find detailed notes and an example in Section *2.1.3.1 Setting Notes* under "Voltage connection".

Binary Inputs and Outputs

The connections to the power plant depend on the possible allocation of the binary inputs and outputs, i.e. how they are assigned to the power equipment. The preset allocation can be found in the tables in Section *D Default Settings and Protocol-dependent Functions* of the Appendix. Check also whether the labelling corresponds to the allocated indication functions.

Changing Setting Group

If binary inputs are used to change setting groups, please observe the following:

- To enable the control of 4 possible setting groups 2 binary inputs have to be available. One binary input must be set for *>Set Group Bit0*, the other input for *>Set Group Bit1*.
- To control two setting groups, one binary input set for *>Set Group Bit0* is sufficient since the binary input *>Set Group Bit1*", which is not assigned, is considered to be not controlled.
- The status of the signals controlling the binary inputs to activate a particular setting group must remain constant as long as that particular group is to remain active.

The following Table shows the relationship between binary inputs and the setting groups A to D. Principal connection diagrams for the two binary inputs are illustrated in the following figure. The Figure illustrates an example in which both Set Group Bits 0 and 1 are configured to be controlled (actuated) when the associated binary input is energized (high).

Table 3-1 Changing setting groups with binary inputs

Binary Input		Active settings group
>Set Group Bit 0	>Set Group Bit 1	
Not energized	Not energized	GroupA
Energized	Not energized	Group B
Not energized	Energized	Group C
Energized	Energized	Group D

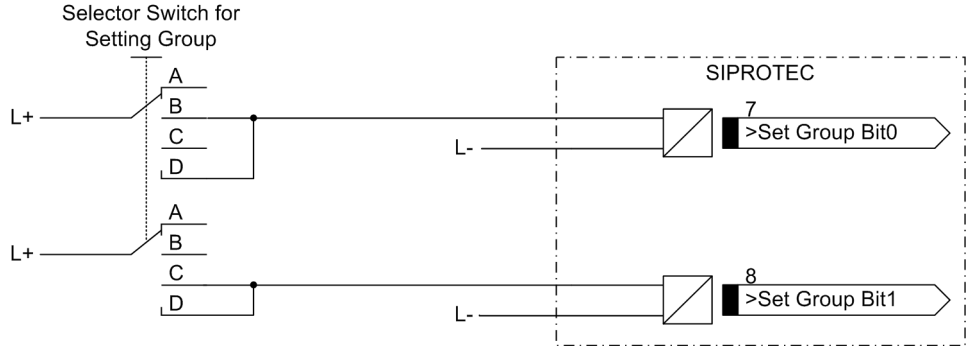

[einstellgruppenumschalt-7sa-ueber-binaere-240702-kn, 1, en_GB]

Figure 3-1 Connection diagram (example) for setting group switching with binary inputs

Trip Circuit Supervision

Please note that two binary inputs or one binary input and one bypass resistor R must be connected in series. The pick-up threshold of the binary inputs must therefore be substantially below half the rated control DC voltage.

If **two** binary inputs are used for the trip circuit supervision, these binary inputs must be isolated, i.o.w. not be communed with each other or with another binary input.

If **one** binary input is used, a bypass resistor R must be inserted (see following figure). The resistor R is connected in series with the second circuit breaker auxiliary contact (Aux2) to allow the detection of a trip circuit failure even when circuit breaker auxiliary contact (Aux1) is open and the command relay has dropped out. The value of this resistor must be such that in the circuit breaker open condition (Aux1 is open and Aux2 is closed) the circuit breaker trip coil (TC) is no longer picked up and binary input (BI1) is still picked up if the command relay contact is open.

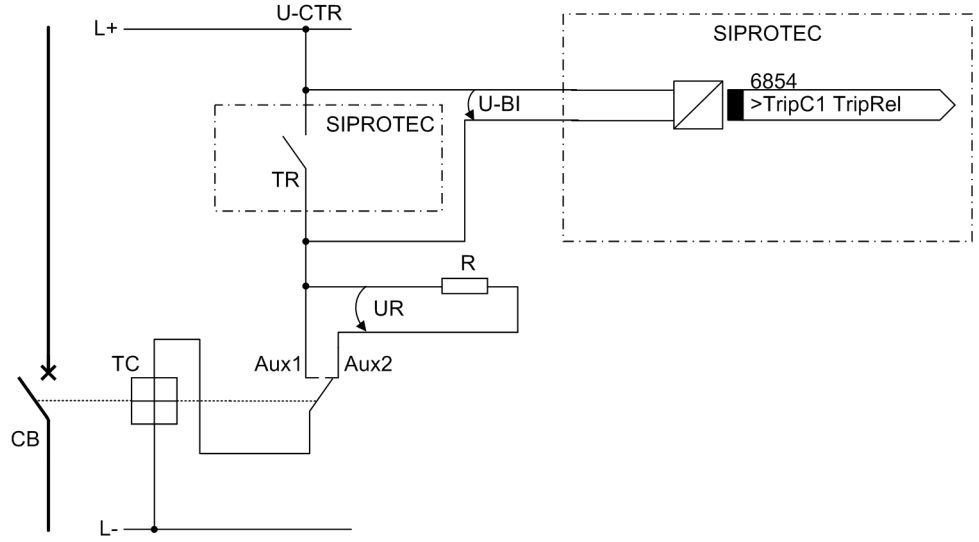

[prinzip-ausloesekrueb-1-be-wlk-010802, 1, en_GB]

Figure 3-2 Principle of the trip circuit supervision with one binary input

TR	Trip relay contact
CB	Circuit breaker
TC	Circuit breaker trip coil
Aux1	Circuit breaker auxiliary contact (NO contact)
Aux2	Circuit breaker auxiliary contact (NC contact)
U-CTR	Control voltage for trip circuit
U-BI	Input voltage of binary input
R	Bypass resistor
UR	Voltage across the bypass resistor

This results in an upper limit for the resistance dimension, R_{max} and a lower limit R_{min}, from which the optimal value of the arithmetic mean R should be selected:

$$R = \frac{R_{max} + R_{min}}{2}$$

[formel-mittelwert-r-260602-kn, 1, en_GB]

In order that the minimum voltage for controlling the binary input is ensured, R_{max} is derived as::

$$R_{max} = \left(\frac{U_{CTR} - U_{BI\ min}}{I_{BI\ (High)}}\right) - R_{TC}$$

[formel-rmax-260602-kn, 1, en_GB]

To keep the circuit breaker trip coil not energized in the above case, R_{min} is derived as:

$$R_{min} = R_{TC} \cdot \left(\frac{U_{CTR} - U_{TC\ (LOW)}}{U_{TC\ (LOW)}} \right)$$

[formel-rmin-260602-kn, 1, en_GB]

$I_{BI\ (HIGH)}$	Constant current with activated BI (= 1.8 mA)
$U_{BI\ min}$	Minimum control voltage for BI 19 V for delivery setting for nominal voltages of 24 V/48 V/60 V; 88 V for delivery setting for nominal voltages of 110 V/125 V/220 V/250 V; 176 Vfor delivery setting for nominal voltages of 220 V/250 V
U_{CTR}	Control voltage for trip circuit
R_{CBTC}	DC resistance of circuit breaker trip coil
$U_{CBTC\ (LOW)}$	Maximum voltage on the circuit breaker trip coil that does not lead to tripping

If the calculation results that $R_{max} < R_{min}$ then the calculation must be repeated, with the next lowest switching threshold $U_{BE\ min}$ and this threshold must be implemented in the relay using plug-in jumpers (see Section "Hardware Modifications").

For the power consumption of the resistance the following applies:

$$P_R = I^2 \cdot R = \left(\frac{U_{CTR}}{R + R_{CBTC}} \right)^2 \cdot R$$

[formel-leistungvon-r-260602-kn, 1, en_GB]

Example:

$I_{BI\ (HIGH)}$	1.8 mA (vom SIPROTEC 4 7VK61)
$U_{BE\ min}$	19 V for delivery setting for nominal voltages 24 V/48 V/60 V (from the device 7VK61); 88 V for delivery setting for nominal voltages 110 V/125 V/220 V/250 V (from the device 7VK61); 176 V for delivery setting for nominal voltages 220 V/250 V (from the devicet 7VK61)
U_{ST}	110 V (system / trip circuit)
R_{CBTC}	500 Ω (system / trip circuit)
$U_{LSS\ (LOW)}$	2 V (system / trip circuit)

$$R_{max} = \left(\frac{110\ V - 19\ V}{1{,}8\ mA} \right) - 500\ \Omega = 50{,}1\ k\Omega$$

[beispiel-rmax-150502-kn, 1, en_GB]

$$R_{min} = 500\ \Omega \cdot \left(\frac{110\ V - 2\ V}{2\ V} \right) = 27\ k\Omega$$

[beispiel-rmin-150502-kn, 1, en_GB]

$$R = \frac{R_{max} + R_{min}}{2} = 39.1\ k\Omega$$

[beispiel-rmittelwert-150502-kn, 1, en_GB]

The closest standard value of 39 kΩ is selected; the power is:

$$P_R = \left(\frac{110\ V}{39\ k\Omega + 0.5\ k\Omega}\right)^2 \cdot 39\ k\Omega \geq 0.3\ W$$

[beispiel-leistungvonr-150502-kn, 1, en_GB]

3.1.2 Hardware Modifications

3.1.2.1 General

A subsequent adaptation of hardware to the power system conditions can be necessary for example with regard to the control voltage for binary inputs or termination of bus-capable interfaces. Follow the procedure described in this section, whenever hardware modifications are carried out.

Auxiliary Voltage

There are different ranges of input voltage for the auxiliary voltage *A Ordering Information and Accessories*). The power supplies of the variants for DC 60 V/110 V/125 V and DC 110 V/125 V/220 V/250 V and AC 115 V are largely interchangeable by modifying the position of the jumpers. The assignment of these jumpers to the nominal voltage ranges and their spatial arrangement on the PCB are described further below at “Processor Board C-CPU-2” Location and ratings of the miniature fuse and the buffer battery are also shown. When the device is delivered, these jumpers are set according to the name-plate sticker. Generally, they do not need to be altered.

Life contact

The life contact of the device is a changeover contact from which either the NC contact or the NO contact can be connected to the device terminals via a plug-in jumper (X40). Assignments of the jumpers to the contact type and the spatial layout of the jumpers are described in the following Section at margin heading “Processor Board C-CPU-2”.

Rated Currents

The input transformers of the device are set to a nominal current of 1 A or 5 A with jumpers. The position of the jumpers are set according to the name-plate sticker. The assignments of the jumpers to the nominal current and the spatial layout of the jumpers are described in the following section “Board C-I/O-2” or “Board C-I/O-11”. All jumpers must be set for one nominal current, i.e. one jumper (X61 to X64) for each input transformer and additionally the common jumper X60.



NOTE

If in exceptional cases the current ratings are changed, you have to inform the device of these changes by entering the new values in address 206 **CT SECONDARY** in the Power System Data.

Control Voltage for Binary Inputs

When the device is delivered the binary inputs are set to operate with a voltage that corresponds to the nominal voltage of the power supply. If the nominal values differ from the power system control voltage, it may be necessary to change the switching threshold of the binary inputs.

A jumper position is changed to adjust the pickup voltage of a binary input. The assignment of the jumpers to the binary inputs and the spatial layout of the jumpers is described in the following sections at “Processor Board C-CPU-2”, “Board C-I/O-4” and “Board C-I/O-11”.



NOTE

If binary inputs are used for trip circuit supervision, please note that two binary inputs (or a binary input and a bypass resistance) are connected in series. The switching threshold must lie clearly below half the nominal control voltage.

Type of Contact for Output Relays

Some input/output boards can contain relays whose contacts can be set to have normally closed or normally open contacts. To do so, you have to move a jumper. The following sections under “Switching Elements on Printed Circuit Boards”describe for which relays on which boards this is the case.

Exchanging Interfaces

The serial interfaces can only be replaced in devices designed for panel flush and cubicle mounting The following section under margin heading “Replacing Interface Modules” describes which interfaces can be exchanged, and how this is done.

Terminating interfaces with bus capability

If the device is equipped with a serial RS485 port, the RS485 bus must be terminated with resistors at the last device on the bus to ensure reliable data transmission. For this purpose, terminating resistors are provided on the PCB of the C-CPU-2 processor board and on the RS485 or PROFIBUS/DNP interface module which can be connected via jumpers. The spatial arrangement of the jumpers on the PCB of the processor module C-CPU-2 is described in the following sections under the margin heading “Processor Module C-CPU-2” and on the interface modules under “RS485 Interface” and “PROFIBUS Interface”. Both jumpers must always be plugged in the same way.

The termination resistors are disabled on delivery.

Spare Parts

Spare parts can include the backup battery that maintains the data in the battery-buffered RAM when the voltage supply fails, and the miniature fuse of the internal power supply. Their spatial arrangement is shown in the figure of the processor module. The ratings of the fuse are printed on the board next to the fuse. When replacing the fuse, please observe the guidelines given in the SIPROTEC 4 System Description in the chapter “Maintenance” and “Corrective Maintenance”.

3.1.2.2 Disassembly

Work on the Printed Circuit Boards



NOTE

It is assumed for the following steps that the device is not operative.



CAUTION

Caution when changing jumper settings that affect nominal values of the device:

As a consequence, the ordering number (MLFB) and the ratings on the name plate no longer match the actual device properties.

✧ Where such changes are necessary in exceptional cases, they MUST be marked clearly and visibly on the device. Self-adhesive stickers are available that can be used as supplementary name plate.

To perform work on the printed circuit boards, such as checking or moving switching elements or exchanging modules, proceed as follows:

- Prepare your workplace: provide a suitable pad for electrostatically sensitive devices (ESD). Also the following tools are required:
  - screwdriver with a 5 to 6mm wide tip,
  - a crosstip screwdriver for Pz size 1,
  - a 5 mm socket wrench.

- Unfasten the screw-posts of the D-subminiature connectors on the back panel at location “A” and “C”. This activity is not necessary if the device is designed for surface mounting.
- If there is an additional interface on location "B" next to the interfaces at location "A" and "C", remove the screws located diagonally to the interfaces. This activity is not necessary if the device is designed for surface mounting.
- Remove the covers on the front panel and loosen the screws which can then be accessed.
- Remove the front panel and tilt it to the side.

Work on the Plug Connectors



CAUTION

Mind electrostatic discharges:

Non-observance can result in minor personal injury or property damage.

✧ In order to avoid electrostatic discharges when handling plug connectors, first touch an earthed metal surface.

✧ Do not plug or unplug interface connectors under voltage!

For the assembly of the boards for the housing size $^1/_3$ refer to *Figure 3-3*, and for the housing size $^1/_2$ in *Figure 3-4*.

- Disconnect the plug connector of the ribbon cable between the front cover and the processor board C-CPU-2 at the front cover itself. This is done by pushing apart the plug connector's top and bottom latches so that the ribbon cable connector is pressed out.
- Disconnect the ribbon cables between the processor board C-CPU-2 (No. 1) and the input/output boards I/O (according to order variant No. 2 to No. 4).
- Remove the boards and put them on the earth mat to protect them from ESD damage. In the case of the device variant for panel surface mounting, please be aware of the fact that a certain amount of force is required in order to remove the C-CPU-2 module due to the existing plug connectors.
- Check the jumpers according to Figures *C-CPU-2 processor board, Page 186* to *Figure 3-13* and the following information. Change or remove the jumpers if necessary.

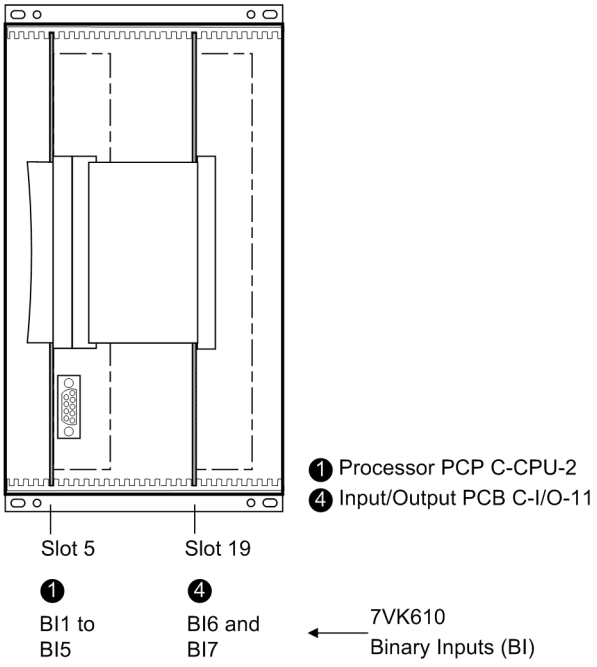

[frontansicht-geh-drittel-o-frontkappe7vk610-240702-oz, 1, en_GB]

Figure 3-3 Front view with housing size $^1/_3$ after removal of the front cover (simplified and scaled down)

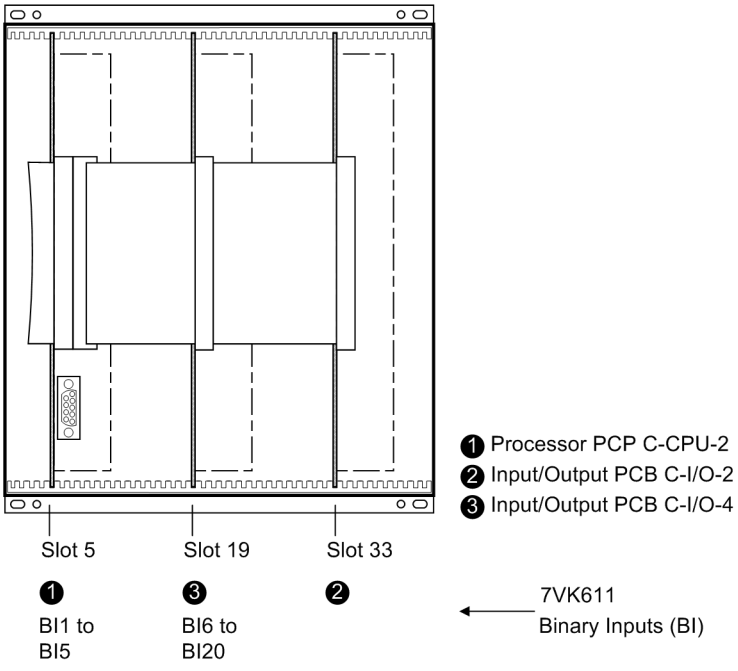

[frontansicht-geh-einhalb-o-frontkappe7vk611-131102-oz, 1, en_GB]

Figure 3-4 Front view with housing size $^1/_2$ after removal of the front cover (simplified and scaled down)

3.1.2.3 Switching Elements on Printed Circuit Boards

C-CPU-2 processor board

The PCB layout of the processor board C–CPU-2 is illustrated in the following figure. The set nominal voltage of the integrated power supply is checked according to *Table 3-2*, the quiescent state of the life contact according to *Table 3-3*, the selected control voltages of the binary inputs BI1 to BI5 according to *Table 3-4* and the integrated RS232 / RS485 interface according to *Table 3-5* to *Table 3-7*. The location and ratings of the miniature fuse (F1) and of the buffer battery (G1) are shown in the following figure. Before checking the integrated RS232/RS485 interface it may be necessary to remove the interface modules placed above.

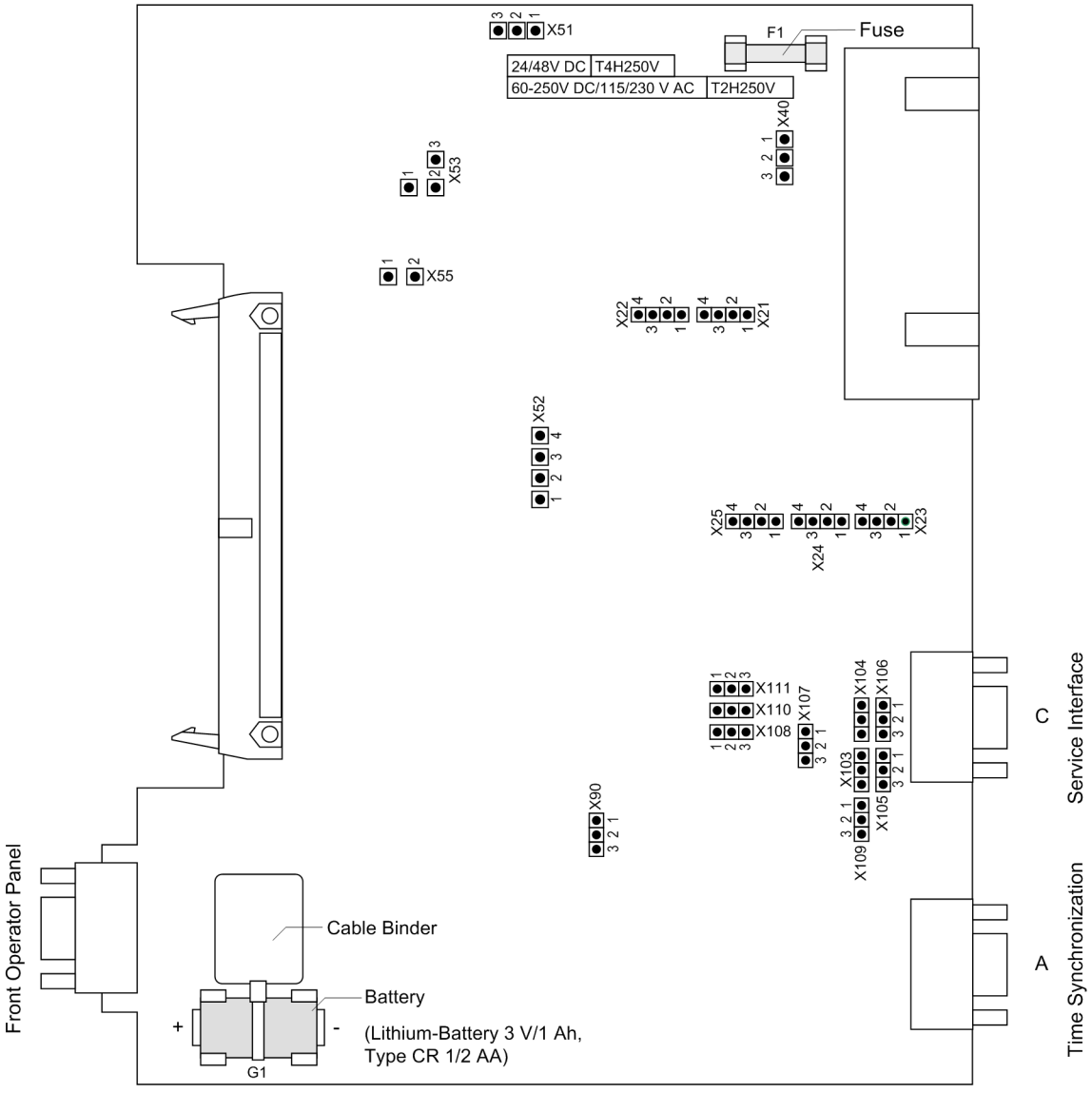

[prozbgr-c-cpu-2-160502-wlk, 1, en_GB]

Figure 3-5 Processor printed circuit board C-CPU-2 with jumpers settings required for the board configuration

Table 3-2 Jumper setting of the rated voltage of the integrated **Power Supply** on the C-CPU-2 processor board

Jumper	Nominal voltage		
	DC 24 V to 48 V	DC 60 V to 125 V	DC 110 V to 250 V, AC 115 V/230 V
X51	Not used	1-2	2-3

Jumper	Nominal voltage		
	DC 24 V to 48 V	DC 60 V to 125 V	DC 110 V to 250 V, AC 115 V/230 V
X52	Not used	1-2 and 3-4	2-3
X53	Not used	1-2	2-3
X55	Not used	Not used	1-2
Fuse	T4H250V	T2H250V	

Table 3-3 Jumper setting of the quiescent state of the **Life Contact** on the processor board C-CPU-2

Jumper	Open in the quiescent state	Closed in the quiescent state	Presetting
X40	1-2	2-3	2-3

Table 3-4 Jumper setting of the **Control Voltages** of the binary inputs BI1 to BI5 on the C-CPU-2 processor board

Binary Inputs	umper	Threshold 19 V [1]	Threshold 88 V [2]	Threshold 176 V [3]
BI1	X21	1-2	2-3	3-4
BI2	X22	1-2	2-3	3-4
BI3	X23	1-2	2-3	3-4
BI4	X24	1-2	2-3	3-4
BI5	X25	1-2	2-3	3-4
[1] Factory settings for devices with power supply voltages of DC 24 V bis 125 V [2] Factory settings for devices with power supply voltages of DC 110 V bis 250 V and AC 115 V [3] Use only with control voltages DC 220 V bis 250 V and AC 230 V				

By repositioning jumpers the interface RS485 can be modified into a RS232 interface and vice versa.
Jumpers X105 to X110 must be set to the same position.

Table 3-5 Jumper settings of the integrated **RS232/485 Interface** on the C-CPU-2 processor board

Jumper	RS232	RS485
X103 and X104	1-2	1-2
X105 to X110	1-2	2-3

The jumpers are preset at the factory according to the configuration ordered.
With interface RS232 jumper X111 is needed to activate CTS which enables the communication with the modem.

Table 3-6 Jumper setting for **CTS** (**C**lear **T**o **S**end, flow control) on the C-CPU-2 processor board

Jumper	/CTS from Interface RS232	/CTS controlled by /RTS
X111	1-2	2-3 [1]

[1] Default setting in releases from 7VK61…/**DD**

Jumper setting 2-3: The connection to the modem is usually established with a star coupler or fibre-optic converter. Therefore the modem control signals according to RS232 standard DIN 66020 are not available. Modem signals are not required since the connection to the SIPROTEC 4 devices is always operated in the half-duplex mode. Please use the connection cable with order number 7XV5100-4.

Jumper setting 1-2: This setting makes the modem signals available, i. e. for a direct RS232-connection between the SIPROTEC 4 device and the modem this setting can be selected optionally. We recommend to use a standard RS232 modem connection cable (converter 9-pin to 25-pin).

NOTE

For a direct connection to DIGSI with interface RS232 jumper X111 must be plugged in position 2-3.

If there are no external terminating resistors in the system, the last devices on a RS485 bus must be configured via jumpers X103 and X104.

Table 3-7 Jumper settings of the **Terminating Resistors** of the RS485 interface on the C-CPU-2 processor board

Jumper	Terminating Resistor enabled	Terminating Resistor disabled	Presetting
X103	2-3	1-2	1-2
X104	2-3	1-2	1-2

Note: Both jumpers must always be plugged in the same way!

Jumper X90 has no function. The factory setting is 1-2.

Terminating resistors can also be connected externally (e.g. to the terminal block). In this case, the terminating resistors located on the RS485 or PROFIBUS interface module or directly on the PCB of the processor board C-CPU-2 must be de-energized.

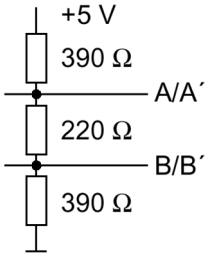

[externe-terminierung-020313-kn, 1, en_GB]

Figure 3-6 Termination of the RS485 interface (external)

C-I/O-4 Input/Output Board(s)

The layout of the PCB for the input/output board C-I/O-4 is shown in the following Figure.

The selected control voltages of the binary inputs BE6 to BE20 are checked according to *Table 3-8*.

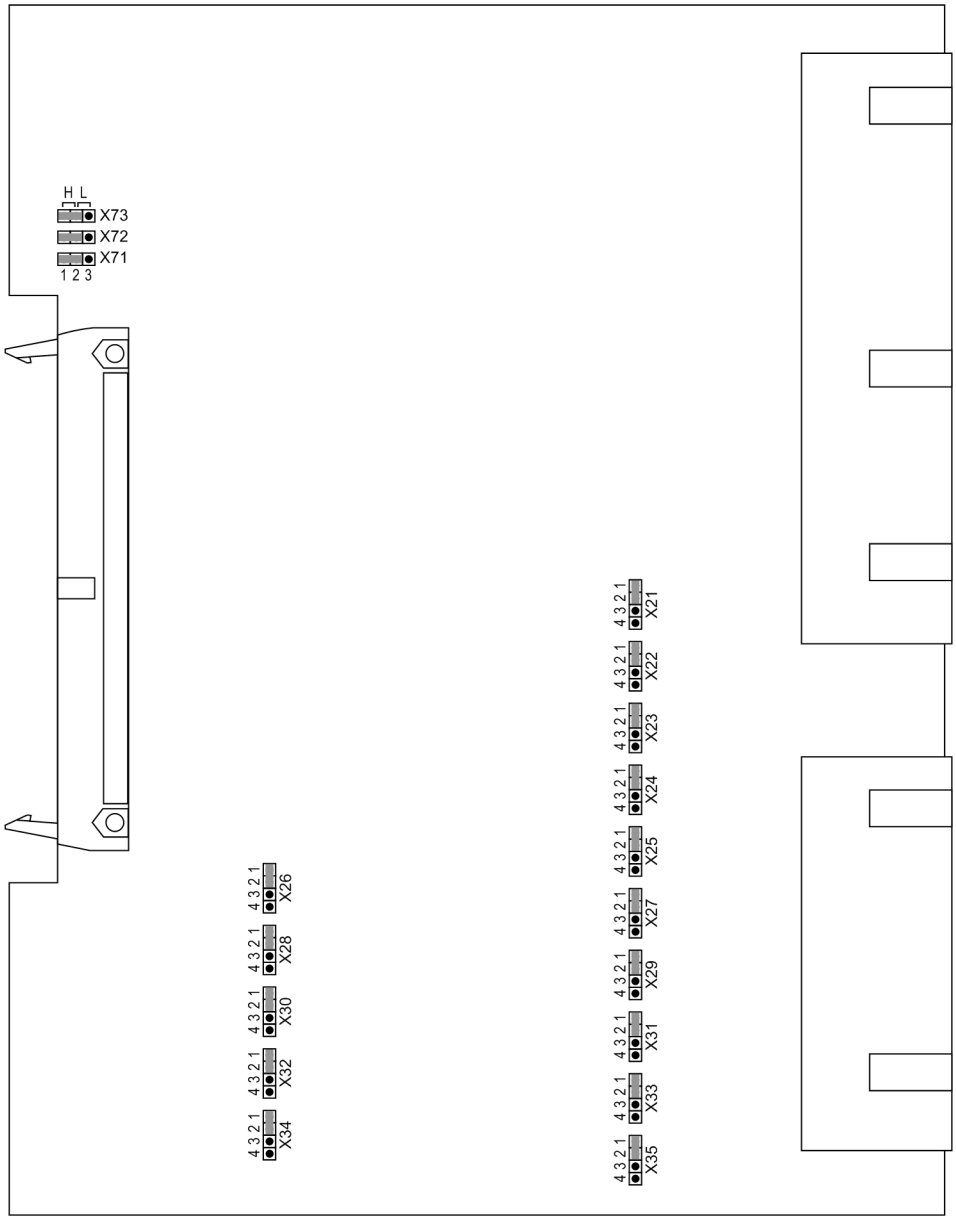

[ein-ausgabebgr-c-io-4-191102-oz, 1, en_GB]

Figure 3-7 C-I/O–4 input/output board with representation of jumper settings required for checking configuration settings

Table 3-8 Jumper settings of Control Voltages of the binary inputs BI6 to BI20 on the input/output board C-I/O-4

Binary inputs	Jumper	Threshold 19 V [1)]	Threshold 88 V [4)]	Threshold 176 V [5)]
BI6	X21	1-2	2-3	3-4
BI7	X22	1-2	2-3	3-4
BI8	X23	1-2	2-3	3-4
BI9	X24	1-2	2-3	3-4
BI10	X25	1-2	2-3	3-4
BI11	X26	1-2	2-3	3-4
BI12	X27	1-2	2-3	3-4
BI13	X28	1-2	2-3	3-4

Binary inputs	Jumper	Threshold 19 V [1]	Threshold 88 V [4]	Threshold 176 V [5]
BI14	X29	1-2	2-3	3-4
BI15	X30	1-2	2-3	3-4
BI16	X31	1-2	2-3	3-4
BI17	X32	1-2	2-3	3-4
BI18	X33	1-2	2-3	3-4
BI19	X34	1-2	2-3	3-4
BI20	X35	1-2	2-3	3-4

[1] Factory settings for devices with power supply voltages of DC 24 to 125 V

[2] Factory settings for devices with power supply voltages of DC 110 to 250 V and AC 115/230 V

[3] Only use for control voltages DC 220 to 250 V and AC 230 V

Jumpers X71, X72 and X73 on the input/output board C-I/O-4 are used for setting the bus address and must not be changed. The following Table lists the jumper presettings.

Table 3-9 Jumper setting of the module addresses of the input/output board C-I/O-4

Jumper	Mounting location
X71	1-2 (H)
X72	2-3 (L)
X73	1-2 (H)

Input/output module C-I/O-2 up to release7VK61 .../DD

There are two different releases of the input output module C-I/O-2. For devices up to release 7VK61.../DD the layout of the printed circuit board is shown in *Figure 3-8*, for devices of release 7VK61.../FF in *Figure 3-8*.

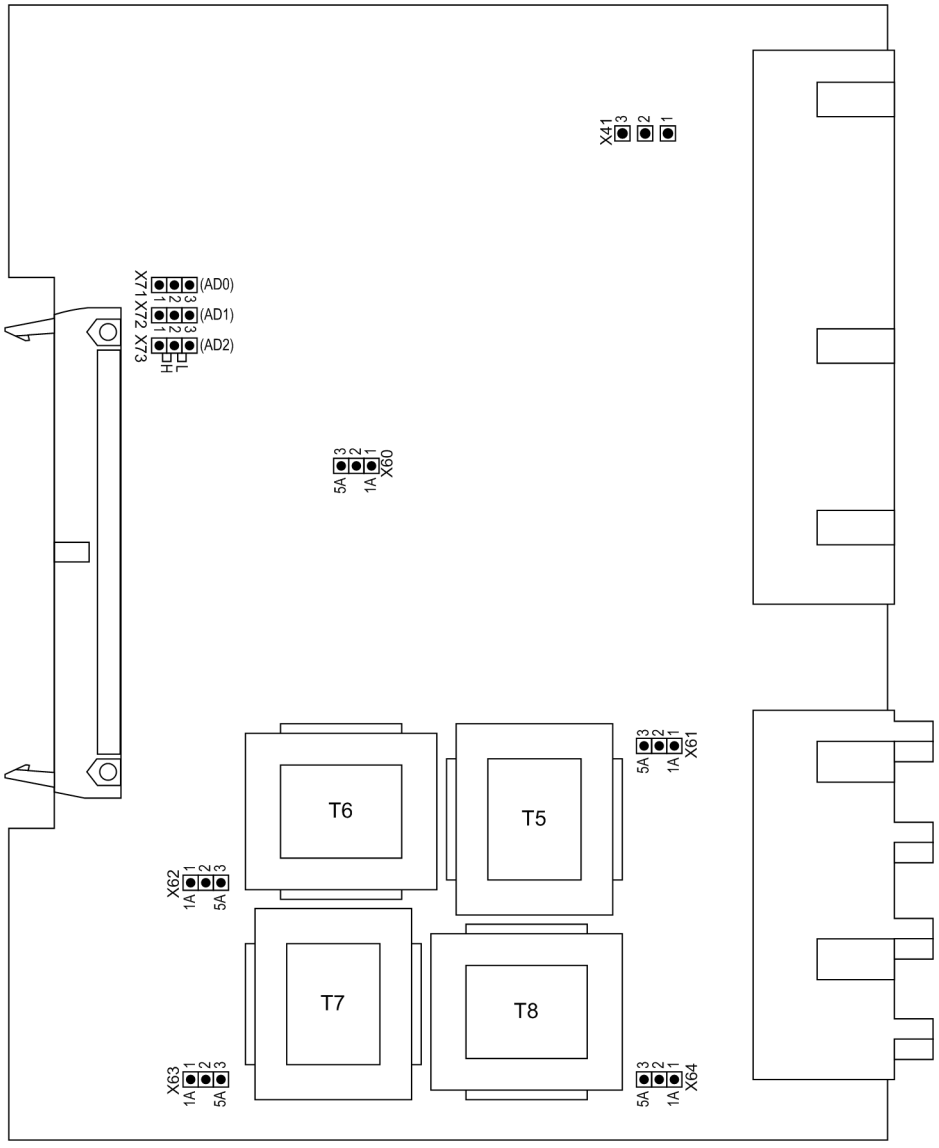

[ein-ausgabebgr-c-io-2-240702-kn, 1, en_GB]

Figure 3-8 Input/output module C-I/O-2 up to release 7VK61.../DD, with representation of the jumper settings required for checking the configuration settings

Table 3-10 Jumper setting for the contact mode of binary output BO6

Jumper	Normally-open contact (NO)	Closed in quiescent state (NC)	Factory setting
X41	1-2	2-3	1-2

The nominal current of the current input transformers are checked on the input/output board C-I/O-2. All jumpers must be set for one nominal current, i.e. one jumper (X61 to X64) for each input transformer and additionally the common jumper X60. The position of jumper X64 is not relevant.

Jumpers X71, X72 and X73 on the input/output board C-I/O-2 are used for setting the bus address and must not be changed. The following Table lists the jumper presettings.

Table 3-11 Jumper settings of the module address of the input/output module C-I/O-2

Jumper	Mounting location
X71	1-2 (H)
X72	1-2 (H)

Jumper	Mounting location
X73	2-3 (L)

Input/Output Board C-I/O-2 Release 7VK61 ../ or HigherFF

The nominal current or measuring range settings are checked on the input/output board C-I/O-2.

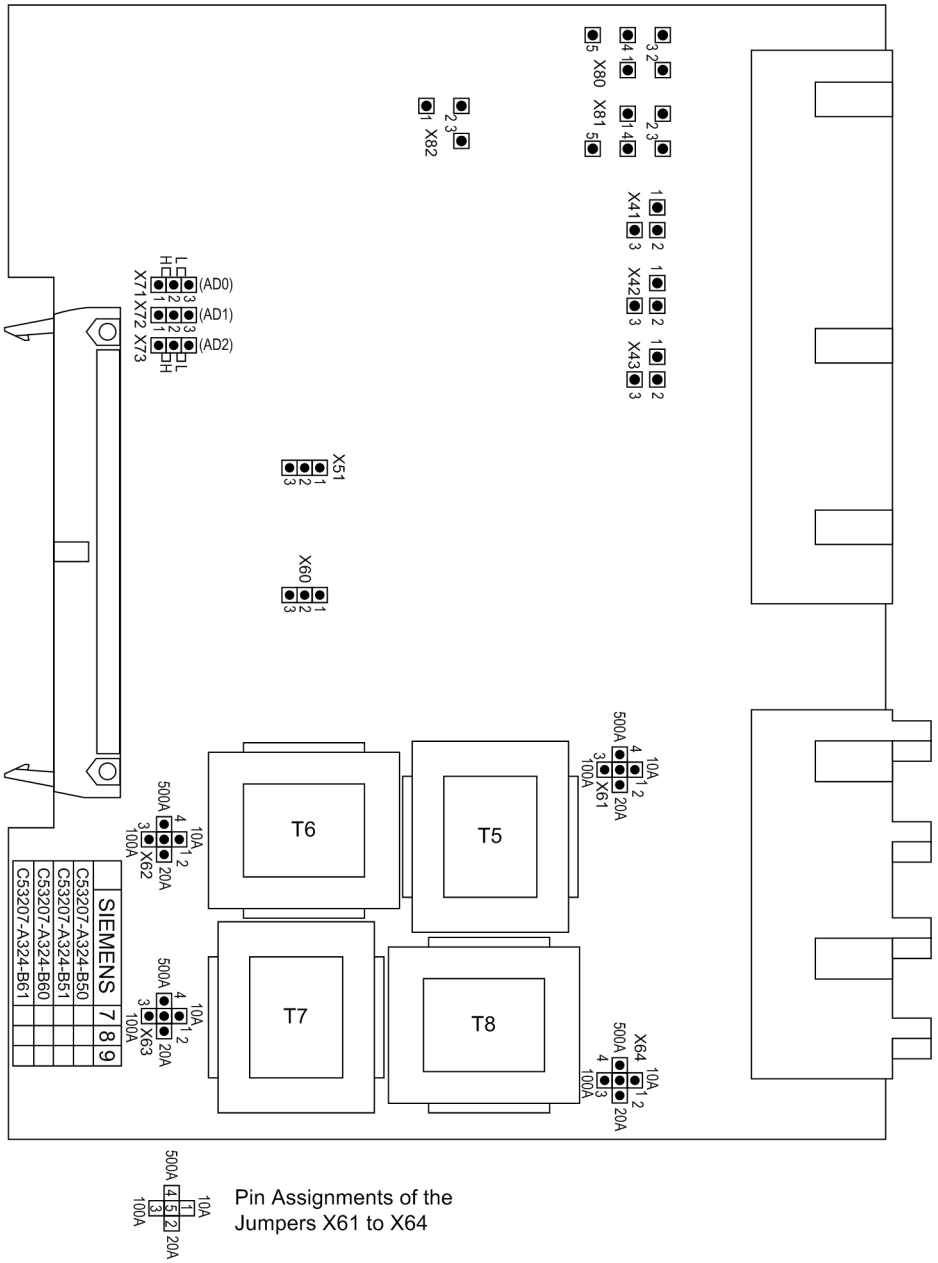

[ein-ausgabebgr-c-io-2-ab-ausgabe7-251103-oz, 1, en_GB]

Figure 3-9 Input/output module C-I/O-2 up to release 7VK61**.../FF, with representation of the jumper settings required for checking the configuration settings

Table 3-12 Jumper setting for Nominal Current or Measuring Range

Jumper	Nominal current 1 A Measuring range 100 A	Nominal current 5 A Measuring range 500 A
X51	1-2	1-2

Jumper	Nominal current 1 A Measuring range 100 A	Nominal current 5 A Measuring range 500 A
X60	1-2	2-3
X61	3-5	4-5
X62	3-5	4-5
X63	3-5	4-5
X64	3-5	4-5

Contacts of relays for binary outputs BO6, BO7 and BO8 can be configured as normally open or normally closed (see also General Diagrams in the Appendix).

Table 3-13 Jumper setting for the Contact Type of the relays for BO6, BO7 and BO8

For	Jumper	Open in quiescent state (NO) [1]	Closed in quiescent state (NC)
BO6	X41	1-2	2-3
BO7	X42	1-2	2-3
BO8	X43	1-2	2-3
[1] delivery condition			

The relays for binary outputs BO1 through BO5 can be connected to common potential, or configured individually for BO1, BO4 and BO5 (BO2 and BO3 are without function in this context) (see also General Diagrams in the Appendix).

Table 3-14 Jumper settings for the configuration of the Common Potential of BO1 through BO5 or for configuration of BO1, BO4 and BO5 as Single Relays

Jumper	BO1 through BO5 connected to common potential [1]	BO1, BO4, BO5 configured as single relays (BO2, BO3 without function)
X80	1-2, 3-4	2-3, 4-5
X81	1-2, 3-4	2-3, 4-5
X82	2-3	1-2
[1] delivery condition		

Jumpers X71, X72 and X73 serve for setting the bus address. Their position must not be changed. The following Table lists the jumper presettings.

Table 3-15 Jumper setting of the module addresses of the input/output board C-I/O-2

Jumper	Mounting location
X71	1-2 (H)
X72	1-2 (H)
X73	2-3 (L)

C-I/O-11 Input/Output Board(s)

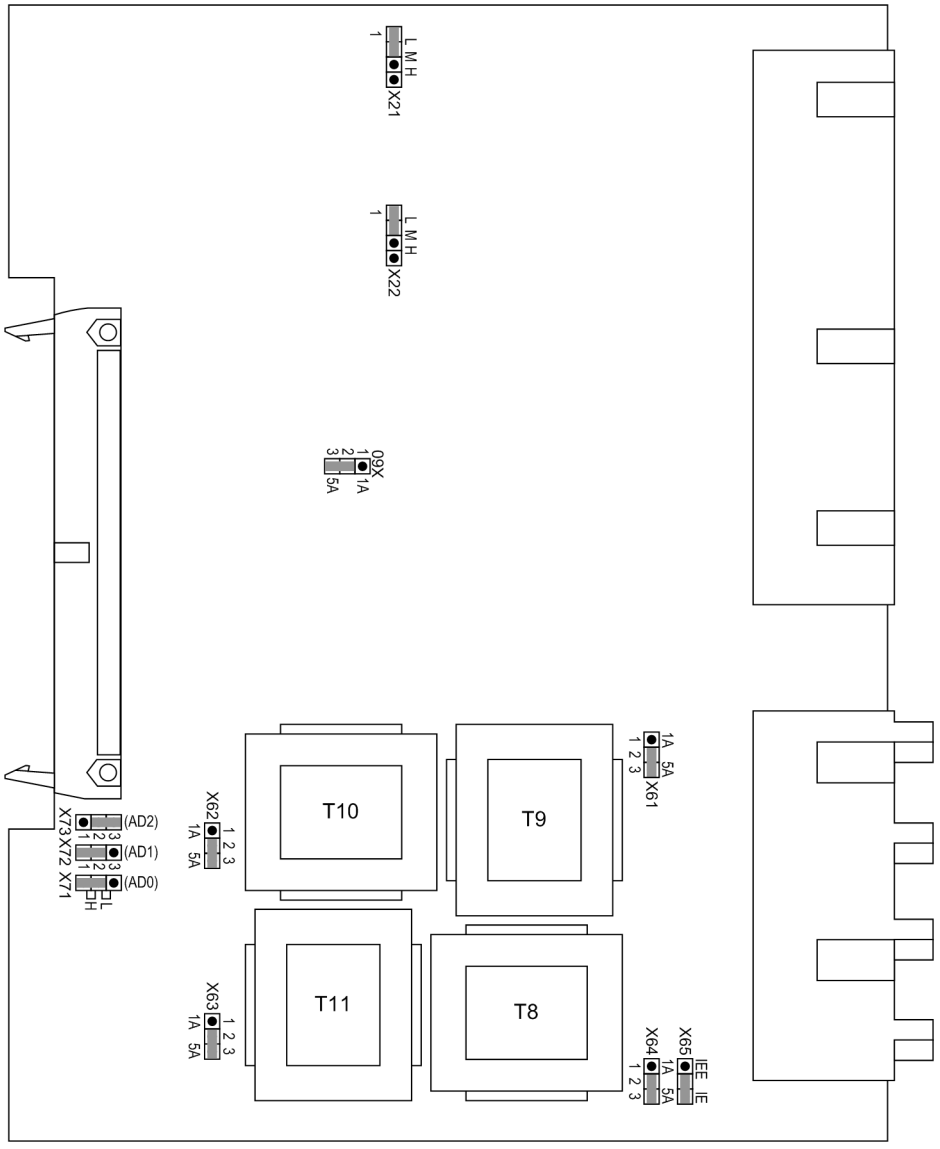

[ein-ausgabebgr-c-io-11-160502-wlk, 1, en_GB]

Figure 3-10 C-I/O-11 input/output board with representation of jumper settings required for checking configuration settings

Table 3-16 Jumper settings for Pickup Voltages of the binary inputs BI6 and BIG7 on the input/output board C-I/O-11

Binary Input	Jumper	Threshold 19 V [1)]	Threshold 88V [4)]	Threshold 176 V [5)]
BI6	X21	L	M	H
BI7	X22	L	M	H

[1)] Factory settings for devices with power supply voltages of DC 24 to 125 V

[2)] Factory settings for devices with power supply voltages of DC 110 to 250 V and AC 115/230 V

[3)] Only use for control voltages DC 220 to 250 V and AC 230 V

The set nominal current of the current input transformers are checked on the input/output board C-I/O-11. The jumpers X60 to X63 must be set for one nominal current, i.e. one jumper (X61 to X63) for each input trans-

former and additionally the common jumper X60. The jumper X64 determines the rated current for the input I_E and may thus have a setting that deviates from that of the phase currents. Jumper X64 is not relevant.

Jumper X64 is plugged in position "IE".

Jumpers X71, X72 and X73 on the input/output board C-I/O-11 are used for setting the bus address and must not be changed. The following Table lists the jumper presettings.

Table 3-17 Jumper settings of Bus Address of the input/output board C-I/O-11

Jumper	Default Setting
X71	1-2 (H)
X72	1-2 (H)
X73	2-3 (L)

3.1.2.4 Interface Modules

Exchanging Interface Modules

The interface modules are located on the processor board C-CPU-2 (Serial. No 1 in Figure *Figure 3-3* to *Figure 3-4*).

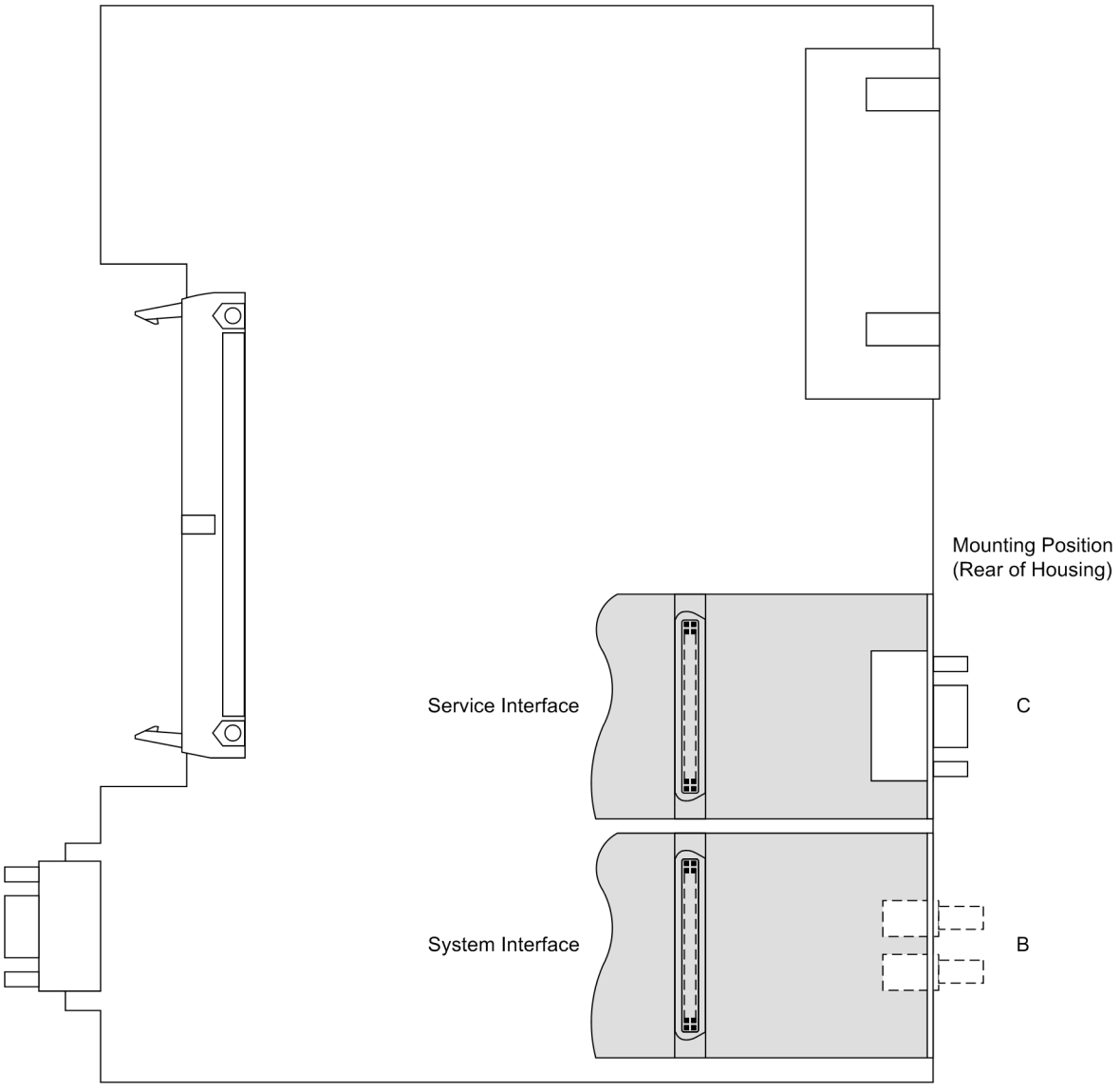

[aufsicht-c-cpu-2-mit-schnittstellen-131102-oz, 1, en_GB]

Figure 3-11 C–CPU–2 processor board with interface boards

Please note the following:

- Only interfaces modules of devices with panel flush mounting and cubicle mounting as well as of mounting devices with detached operator panel can be exchanged.
- Devices in surface mounting housings with double-level terminals can only be changed in our manufacturing centre. Use only interface modules that can be ordered ex-factory via the ordering code (see also Appendix *A Ordering Information and Accessories*).
- You may have to ensure the termination of the interfaces featuring bus capability according to the margin heading “RS485 Interface”.

Table 3-18 Exchange System Interface Modules

Interface	Mounting location / interface	Exchange module
System interface	B	only interface modules that can be ordered in our facilities via the order key (see also Appendix *A Ordering Information and Accessories*)

The order numbers of the exchange modules can be found in the Appendix in Section *A Ordering Information and Accessories* Accessories.

RS232 Interface

Interface RS232 can be modified to interface RS485 and vice versa (see Figures *Figure 3-12* and *Figure 3-13*).

Figure 3-11 shows the C-CPU-2 PCB with the layout of the modules.

The following figure shows the location of the jumpers of interface RS232 on the interface module.

Surface-mounted devices with fiber optics connection have their fiber optics module fitted in the console housing on the case bottom. The fiber optics module is controlled via an RS232 interface module at the associated CPU interface slot. For this application type the jumpers X12 and X13 on the RS232 module are plugged in position 2-3.

Jumper	Terminating Resistors Disconnected
X3	1-2 *)
X4	1-2 *)

*) Default Setting

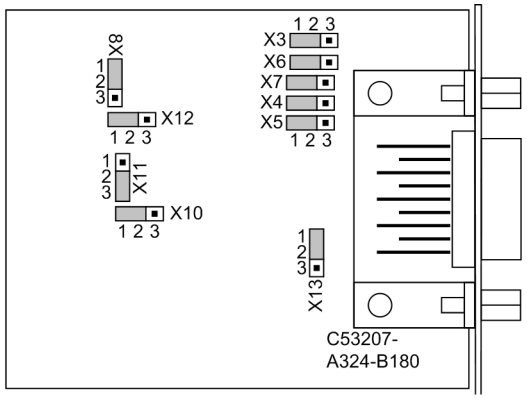

[steckbruecken-rs232-020313-kn, 1, en_GB]

Figure 3-12 Location of the jumpers for configuration of RS232

Terminating resistors are not required for RS232. They are disconnected.

Jumper X11 is used to activate the flow control which is important for the modem communication.

Table 3-19 Jumper setting for CTS (Clear To Send, flow control) on the interface module.

Jumper	/CTS from Interface RS232	/CTS controlled by /RTS
X11	1-2	2-3 [1)]

[1)] delivery condition

Jumper setting 2-3: The connection to the modem is usually established with a star coupler or fiber-optic converter. Therefore the modem control signals according to RS232 standard DIN 66020 are not available. Modem signals are not required since the connection to the SIPROTEC 4 devices is always operated in the half-duplex mode. Please use the connection cable with order number 7XV5100-4.

Jumper setting 1-2: This setting makes the modem signals available, i. e. for a direct RS232-connection between the SIPROTEC 4 device and the modem this setting can be selected optionally. We recommend to use a standard RS232 modem connection cable (converter 9-pin to 25-pin).



NOTE

For a direct connection to DIGSI with interface RS232 jumper X11 must be plugged in position 2-3.

RS485 Interface

The following figure shows the location of the jumpers of interface RS485 on the interface module.

Interface RS485 can be modified to *Figure 3-12* interface RS232 and vice versa.

Jumper	Terminating Resistors	
	Connected	Disconnected
X3	2-3	1-2 *)
X4	2-3	1-2 *)

*) Default Setting

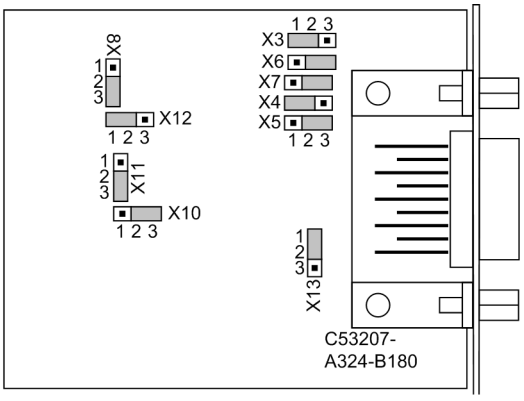

[steckbruecken-rs485-020313-kn, 1, en_GB]

Figure 3-13 Position of terminating resistors and the plug-in jumpers for configuration of the RS485 interface

Profibus/DNP Interface

Jumper	Terminating Resistors	
	Connected	Disconnected
X3	1-2	2-3 *)
X4	1-2	2-3 *)

*) Default Setting

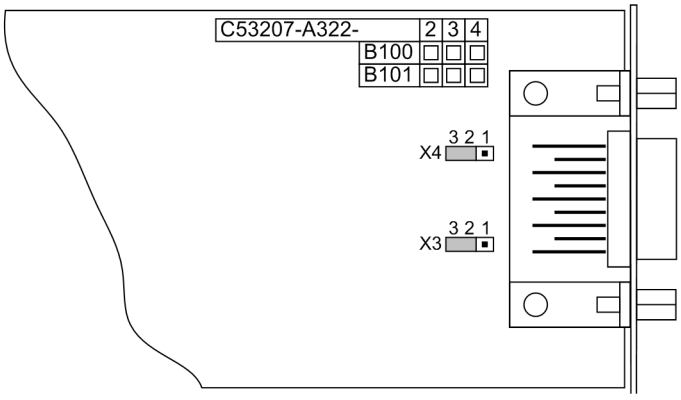

[steckbruecken-profibus-020313-kn, 1, en_GB]

Figure 3-14 Location of the jumpers for configuring the terminating resistors of the active electrical module (PROFIBUS and DNP 3.0 interface)

EN100 Ethernet Module (IEC 61850)

The Ethernet interface module has no jumpers. No hardware modifications are required to use it.

Termination

For bus-capable interfaces, a termination is necessary at the respective last device on the bus, i.e. termination resistors must be connected. On the 7VK61 device, this concerns the variants with RS485 or PROFIBUS7/DNP interfaces.

The terminating resistors are located on the RS485 or PROFIBUS interface module, which is on the C-CPU-2 board (Serial no.1 in Figures *Figure 3-3* and *Figure 3-4*), or directly on the PCB of the processor board C-CPU-2 (see margin heading "Processor Board C-CPU-2", *C-CPU-2 processor board, Page 186*).

Figure 3-11 shows the C-CPU-2 PCB with the layout of the modules.

The board with configuration as RS485 interface is shown in *Figure 3-13*, the module for the Profibus/DNP interface in *Figure 3-14*.

For the configuration of the terminating resistors both jumpers have to be plugged in the same way.

On delivery the jumpers are set so that the terminating resistors are disconnected.

The terminating resistors can also be implemented outside the device (e.g. at the terminal block), see *Figure 3-15*. In this case, the terminating resistors located on the interface module or directly on the PCB of the processor board C-CPU-2 must be disconnected.

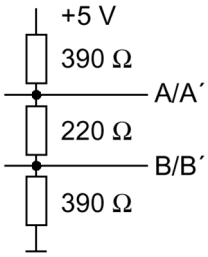

[externe-terminierung-020313-kn, 1, en_GB]

Figure 3-15 Termination of the RS485 Interface (External)

3.1.2.5 Reassembly

The device is assembled in the following steps:

- Carefully insert the boards into the case. The mounting locations are shown in Figures *Figure 3-3* and *Figure 3-4*. For the model of the device designed for surface mounting, use the metal lever to insert the processor board C-CPU-2. Installation is easier with the lever.
- First plug in the plug connectors of the ribbon cable onto the input/output board I/O and then onto the processor board C-CPU-2. Be careful that no connector pins are bent! Do not apply force!
- Connect the plug connectors of the ribbon cable between processor board C-CPU-2 and the front panel to the front panel plug connector.
- Press plug connector interlocks together.
- Put on the front cover and screw it onto the housing.
- Put the covers back on.
- Re-fasten the interfaces on the rear of the device housing. This activity is not necessary if the device is designed for surface mounting.

3.1.3 Mounting

3.1.3.1 Panel Flush Mounting

- Remove the 4 covers at the corners of the front cover. Thus, 4 elongated holes in the mounting bracket are revealed and can be accessed.
- Insert the device into the panel cut out and fasten it with 4 screws. For dimensions refer to section *4.10 Dimensions*.
- Put the 4 covers back into place.
- Connect a solid low-impedance protective earthing at the rear of the device with at least one M4 screw. The cross-section of the earth wire must be equal to the cross-section of any other control conductor connected to the device. The cross-section of the earth wire must be at least 2.5 mm^2.
- Connections are realized via the plug terminals or screw terminals on the rear side of the device according to the circuit diagram.

  When using screwed connections with forked lugs or direct connection, before inserting wires the screws must be tightened so that the screw heads are flush with the outer edge of the connection block.

  A ring lug must be centred in the connection chamber, in such a way that the screw thread fits in the hole of the lug.

  The SIPROTEC 4 System Description has pertinent information regarding wire size, lugs, bending radii, etc. Installation notes are also given in the brief reference booklet attached to the device.

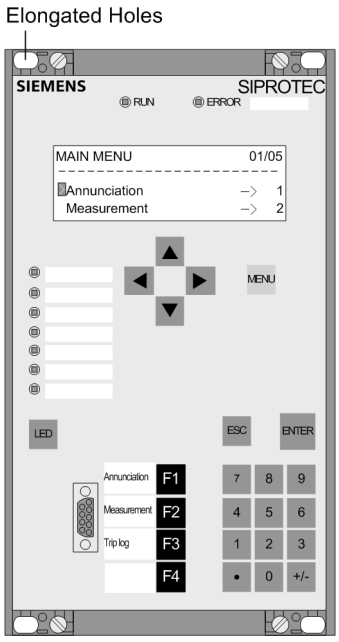

[schalttafeleinbau-gehaeuse-4zeilig-display-drittel-st-040403, 1, en_GB]

Figure 3-16 Panel flush mounting of a device (housing size $^1/_3$)

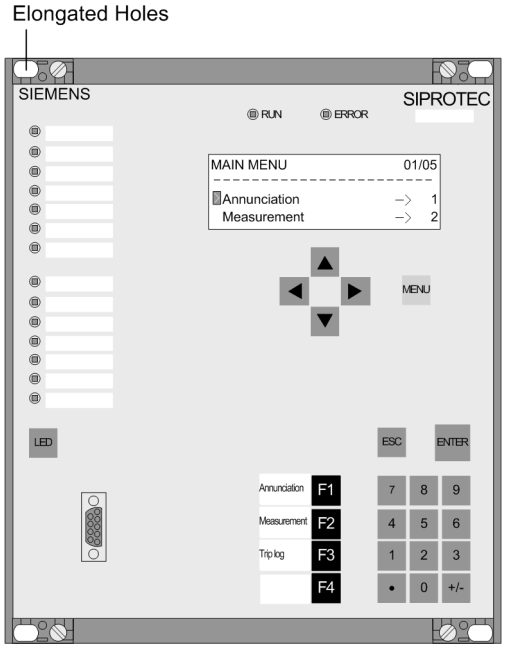

[schalttafeleinbau-gehaeuse-4zeilig-display-halb-st-040403, 1, en_GB]

Figure 3-17 Panel flush mounting of a device (housing size $^1/_2$)

3.1.3.2 Rack and Cubicle Mounting

To install the device in a rack or cubicle, a pair of mounting rails; one for top, one for bottom are required. The ordering codes are stated in Appendix, Section *A Ordering Information and Accessories*.

- Screw on loosely the two angle brackets in the rack or cabinet, each with 4 screws.
- Remove the 4 covers at the corners of the front cover. Thus, 4 elongated holes in the mounting bracket are revealed and can be accessed.
- Fasten the device to the mounting brackets with 4 screws.

- Put the 4 covers back into place.
- Tighten fast the 8 screws of the angle brackets in the rack or cabinet.
- Connect a solid low-impedance protective earthing at the rear of the device with at least one M4 screw. The cross-section of the earth wire must be equal to the cross-section of any other control conductor connected to the device. The cross-section of the earth wire must be at least 2.5 mm^2.
- Make the connections on the device's back panel using the plug or screw terminals as shown in the wiring diagram.

  For screw connections with forked lugs or direct connection, before inserting wires the screws must be tightened so that the screw heads are flush with the outer edge of the connection block.

  A ring lug must be centred in the connection chamber so that the screw thread fits in the hole of the lug.

  The SIPROTEC 4 System Description has pertinent information regarding wire size, lugs, bending radii, etc. Installation notes are also given in the brief reference booklet attached to the device.

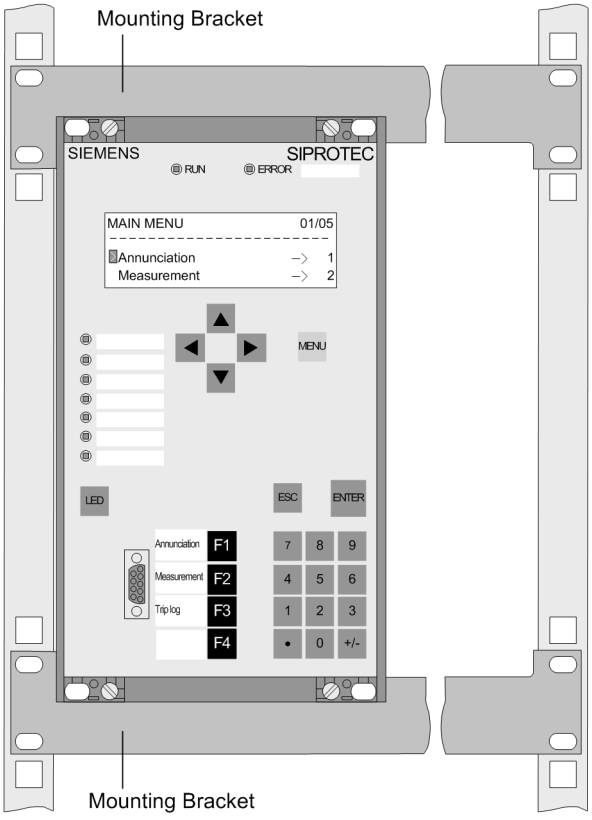

[montage-gehause-4zeilig-display-drittel, 1, en_GB]

Figure 3-18 Installing a device in a rack or cubicle (housing size $^1/_3$)

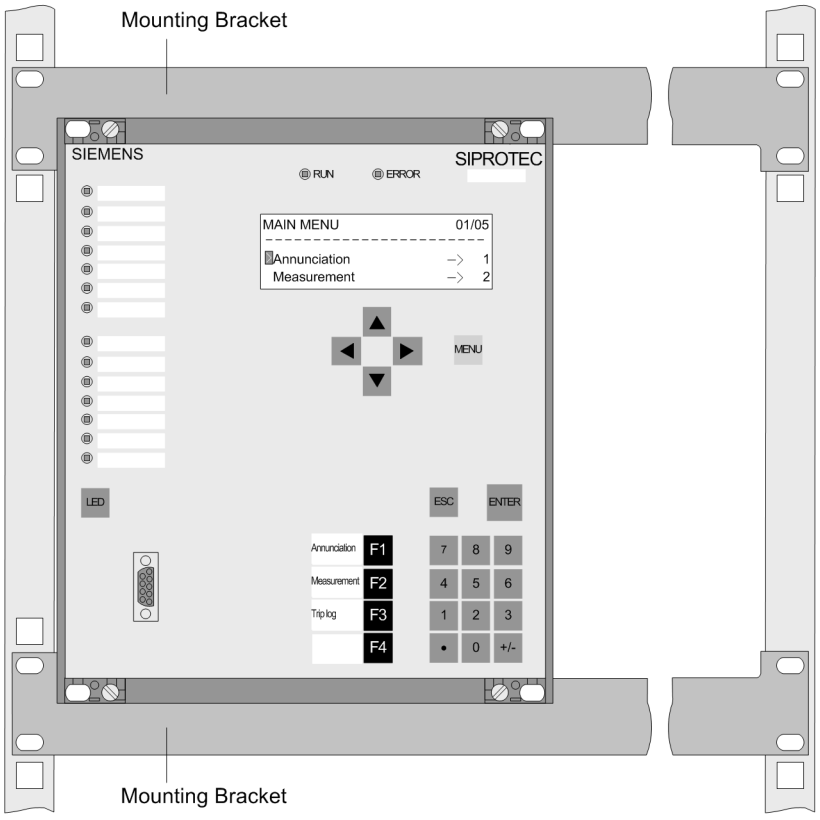

[montage-gehaeuse-4zeilig-display-halb-st-040403, 1, en_GB]

Figure 3-19 Installing a device in a rack or cubicle (housing size $^1/_2$)

3.1.3.3 Panel Mounting

For mounting proceed as follows:

- Secure the device to the panel with four screws. For dimensions see the Technical Data in Section *4.10 Dimensions*.
- Connect the low-resistance operational and protective earth to the ground terminal of the device. The crosssectional area of the ground wire must be equal to the cross-sectional area of any other control conductor connected to the device. It must thus be at least 2.5 mm^2.
- Alternatively, there is the possibility to connect the aforementioned earthing to the lateral earthing surface with at least one M4 screw.
- Make the connections according to the circuit diagram via screw terminals, connections for optical fibres and electrical communication modules via the console housings. The specifications concerning the maximum cross-section, tightening torques, bending radii and strain relief given in the SIPROTEC 4 System Description must be observed. Installation notes are also given in the brief reference booklet that comes with the device.

3.2 Checking Connections

3.2.1 Checking Data Connections of Serial Interfaces

The tables in the following sections list the pin assignments for the different serial interfaces, the time synchronization interface and the Ethernet interface of the device. The position of the connectors is depicted in the following figures.

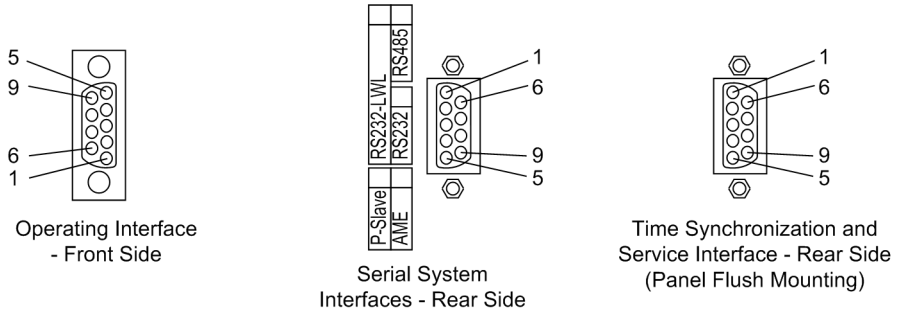

[dsub-buchsen-020313-kn, 1, en_GB]

Figure 3-20 9-pin D-subminiature female connectors

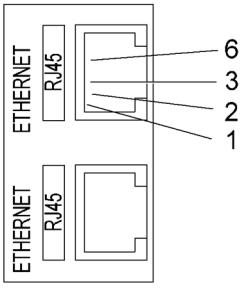

[ethernet-anschlussbuchsen-101103-kn, 1, en_GB]

Figure 3-21 Ethernet connector

Operator Interface

When the recommended communication cable is used (for order designation see Appendix *A Ordering Information and Accessories*) correct connection between the SIPROTEC 4 device and the PC or Laptop is automatically ensured

Service Interface

Check the data connection if the service interface is used to communicate with the device via hard wiring or modem.

System Interface

For versions equipped with a serial interface to a control center, the user must check the data connection. The visual check of the assignment of the transmission and reception channels is of particular importance. With RS232 and fiber optic interfaces, each connection is dedicated to one transmission direction. Therefore the output of one device must be connected to the input of the other device and vice versa.

With data cables, the connections are designated according to DIN 66020 and ISO 2110:

- TxD = Data Transmit
- RxD = Data Receive
- $\overline{\text{RTS}}$ = Request to send

- $\overline{\text{CTS}}$ = Clear to send
- GND = Signal / Chassis Ground

The cable shield is to be earthed at **both** line ends. For extremely EMC-prone environments, the earth may be connected via a separate individually shielded wire pair to improve immunity to interference.

Table 3-20 The assignments of the D-subminiature and RJ45 connector for the various interfaces

Pin No.	Operator interface	RS232	RS485	PROFIBUS FMS Slave, RS485 PROFIBUS DP Slave, RS485	DNP3.0 RS485	Ethernet EN 100
1	Shield (with shield ends electrically connected)					Tx+
2	RxD	RxD	-	-	-	Tx-
3	TxD	TxD	A/A' (RxD/TxD-N)	B/B' (RxD/TxD-P)	A	Rx+
4	-	-	-	CNTR-A (TTL)	RTS (TTL level)	-
5	GND	GND	C/C' (GND)	C/C' (GND)	GND1	-
6	-	-	-	+5 V (max. load < 100 mA)	VCC1	Rx-
7	$\overline{\text{RTS}}$	$\overline{\text{RTS}}$	- [1]	-	-	-
8	$\overline{\text{CTS}}$	$\overline{\text{CTS}}$	B/B' (RxD/TxD-P)	A/A' (RxD/TxD-N)	B	-
9	-	-	-	-	-	Non Existent

[1] Pin 7 also carries the RTS signal with RS232 level when operated as RS485 Interface. Pin 7 must therefore not be connected!

RS485-Termination

The RS485 interface is capable of half-duplex service with the signals A/A' and B/B' with a common relative potential C/C' (GND). Make sure that only the terminating resistors at the last device on the bus are connected, but not for all other devices on the bus. The jumpers for the terminating resistors are on the interface module (see *Figure 3-12* or *Figure 3-13*) of directly on the C-CPU-2 (see *Figure 3-5* and *Table 3-7*). Terminating resistors can also be connected externally (e.g. to the terminal block, see *Figure 3-6*). In this case, the terminating resistors located on the module must be disabled.

If the bus is extended, make sure again that only the terminating resistors at the last device on the bus are connected.

Time Synchronization Interface

It is optionally possible to process 5 V, 12 V or 24 V time synchronization signals, provided that these are connected to the inputs named in the following table.

Table 3-21 D-subminiature connector assignment of the time synchronization interface

Pin No.	Description	Signal meaning
1	P24_TSIG	Input 24 V
2	P5_TSIG	Input 5 V
3	M_TSIG	Return line
4	- [1]	- [1]
5	SHIELD	Shield potential
6	-	-
7	P12_TSIG	Input 12 V
8	P_TSYNC [1]	Input 24 V [1]
9	SHIELD	Shield potential

[1] Assigned, but cannot be used

Optical Fibres

WARNING

Do not look directly into the fiber-optic elements, not even with optical devices! Laser class 1 according to EN 60825-1.

✧

For the protection data communication, refer to the following section.

The transmission via fiber optics is particularly insensitive to electromagnetic interference and thus ensures galvanic isolation of the connection. Transmit and receive connections are shown with the symbols ▪⟶ or transmit and ⟶● for receive.

The character idle state for the optical fibre interface is "Light off". If the character idle state is to be changed, use the operating program DIGSI, as described in the SIPROTEC 4 System Description.

Further Connections

For further connections a visual inspection is sufficient for the time being. Electrical and functional controls are performed during commissioning (see the following main section).

3.2.2 Checking the System Connections

WARNING

Warning of dangerous voltages

Non-observance of the following measures can result in death, personal injury or substantial property damage.

✧ Therefore, only qualified people who are familiar with and adhere to the safety procedures and precautionary measures shall perform the inspection steps.

CAUTION

Be careful when operating the device on a battery charger without a battery

Non-observance of the following measure can lead to unusually high voltages and consequently, the destruction of the device.

✧ Do not operate the device on a battery charger without a connected battery. (For limit values see also Technical Data, Section *4.1 General*).

Before the device is energized for the first time, it should be in the final operating environment for at least 2 hours to equalize the temperature, to minimize humidity and avoid condensation. Connections are checked with the device at its final location. The plant must first be switched off and earthed.

Proceed as follows in order to check the system connections:

- Protective switches for the power supply and the measured voltages must be switched off.
- Check the continuity of all current and voltage transformer connections against the system and connection diagrams:
  - Are the current transformers earthed properly?
  - Are the polarities of the current transformers the same?
  - Is the phase relationship of the current transformers correct?
  - Are the voltage transformers earthed properly?
  - Are the polarities of the voltage transformers correct?
  - Is the phase relationship of the voltage transformers correct?
  - Is the polarity for current input I_4 correct (if used)?
  - Is the polarity for voltage input U_4 correct (if used, e.g. with open delta winding or busbar voltage)?
- Check the functions of all test switches that are installed for the purposes of secondary testing and isolation of the device. Of particular importance are test switches in current transformer circuits. Be sure these switches short-circuit the current transformers when they are in the “test mode”.
- The short circuit links of the connectors for the current circuits have to be checked. This can be done using secondary test equipment or other test equipment for checking continuity. Make sure that terminal continuity is not wrongly simulated in reverse direction via current transformers or their short-circuiters.
  - Remove the front cover.
  - Remove the ribbon cable connected to the input/output board with the measured current inputs (on the front side it is the right PCB, for housing size $^1/_3$ see *Figure 3-3* slot 19, for housing size $^1/_2$ see *Figure 3-4* slot 33) and remove the PCB so that there is no more contact with the plug-in terminal.
  - At the terminals of the device, check continuity for each pair of terminals that receives current from the CTs.
  - Firmly re-insert the I/O board. Carefully connect the ribbon cable. Be careful that no connector pins are bent! Don't apply force!
  - At the terminals of the device, again check continuity for each pair of terminals that receives current from the CTs.
  - Attach the front panel and tighten the screws.
- Connect an ammeter in the supply circuit of the power supply. A range of about 2.5 A to 5 A for the meter is appropriate.
- Switch on m.c.b. for auxiliary voltage (supply protection), check the voltage level and, if applicable, the polarity of the voltage at the device terminals or at the connection modules.
- The measured steady-state current should correspond to the quiescent power consumption of the device. Transient movement of the ammeter merely indicates the charging current of capacitors.
- Remove the voltage from the power supply by opening the protective switches.
- Disconnect the measuring test equipment; restore the normal power supply connections.
- Apply voltage to the power supply.
- Close the protective switches for the voltage transformers.
- Verify that the voltage phase rotation at the device terminals is correct.
- Open the miniature circuit breakers for the transformer voltage (VT mcb)
- Check tripping circuits to the circuit breakers.
- Check the close circuits to the power system circuit breakers.
- Verify that the control wiring to and from other devices is correct.

- Check the signalling connections.
- Close the protective switches.

3.3 Commissioning



WARNING

Warning of dangerous voltages when operating an electrical device

Non-observance of the following measures can result in death, personal injury or substantial property damage.

- ✧ Only qualified people shall work on and around this device. They must be thoroughly familiar with all warnings and safety notices in this instruction manual as well as with the applicable safety steps, safety regulations, and precautionary measures.
- ✧ Before making any connections, the device must be earthed at the protective conductor terminal.
- ✧ Hazardous voltages can exist in the power supply and at the connections to current transformers, voltage transformers, and test circuits.
- ✧ Hazardous voltages can be present in the device even after the power supply voltage has been removed (capacitors can still be charged).
- ✧ After removing voltage from the power supply, wait a minimum of 10 seconds before re-energizing the power supply. This wait allows the initial conditions to be firmly established before the device is re-energized.
- ✧ The limit values given in Technical Data must not be exceeded, neither during testing nor during commissioning.

For tests with a secondary test equipment ensure that no other measurement voltages are connected and the trip and close commands to the circuit breakers are blocked, unless otherwise specified.



DANGER

Hazardous voltages during interruptions in secondary circuits of current transformers

Non-observance of the following measure will result in death, severe personal injury or substantial property damage.

- ✧ Short-circuit the current transformer secondary circuits before current connections to the device are opened.

During the commissioning procedure, switching operations must be carried out. The tests described require that they can be done without danger. They are accordingly not meant for operational checks.



WARNING

Warning of dangers evolving from improper primary tests

Non-observance of the following measure can result in death, personal injury or substantial property damage.

- ✧ Primary tests may only be carried out by qualified persons who are familiar with commissioning protection systems, with managing power systems and the relevant safety rules and guidelines (switching, earthing etc.).

3.3.1 Test Mode/Transmission Block

Activation and Deactivation

If the device is connected to a central control system or a server via the SCADA interface, then the information that is transmitted can be modified with some of the protocols available (see Table "Protocol-dependent functions" in the Appendix *D.7 Protocol-dependent Functions*).

If **Test mode** is set ON, then a message sent by a SIPROTEC 4 device to the main system has an additional test bit. This bit allows the message to be recognized as resulting from testing and not an actual fault or power system event. Furthermore it can be determined by activating the **Transmission block** that no indications at all are transmitted via the system interface during test mode.

The SIPROTEC 4 System Description describes how to activate and deactivate test mode and blocked data transmission. Note that when DIGSI is being used, the program must be in the **Online** operating mode for the test features to be used.

3.3.2 Checking the Time Synchronisation Interface

If external time synchronization sources are used, the data of the time source (antenna system, time generator) are checked (see Section 4 under „Time Synchronization"). A correct function (IRIG B, DCF77) is recognized in such a way that 3 minutes after the startup of the device the clock status is displayed as *synchronized*, accompanied by the indication *Alarm Clock OFF*. For further information please refer to the SIPROTEC System Description.

Table 3-22 Time status

No.	Status text	Status
1	– – – – – – – –	synchronized
2	– – – – – – ST	
3	– – – – ER – –	not synchronized
4	– – – – ER ST	
5	– – NS ER – –	
6	– – NS – – – –	
Legend: – – NS – – – – – – – – ER – – – – – – – – ST		time invalid time fault summertime

3.3.3 Test system interface

Prefacing Remarks

If the device features a system interface and uses it to communicate with the control centre, the DIGSI device operation can be used to test if messages are transmitted correctly. This test option should however definitely "not"" be used while the device is in service on a live system.

DANGER

The sending or receiving of indications via the system interface by means of the test function is a real information exchange between the SIPROTEC 4 device and the control centre. Connected operating equipment such as circuit breakers or disconnectors can be switched in this way!

Non-observance of the following measure will result in death, severe personal injury or substantial property damage.

✧ Equipment used to allow switching such as circuit breakers or disconnectors is to be checked only during commissioning. Do not under any circumstances check them by means of the testing mode during “real” operation performing transmission and reception of messages via the system interface.

NOTE

After termination of the hardware test, the device will reboot. Thereby, all annunciation buffers are erased. If required, these buffers should be extracted with DIGSI prior to the test.

The interface test is carried out using DIGSI in the Online operating mode:

- Open the **Online** directory by double-clicking; the operating functions for the device appear.
- Click on **Test**; the function selection appears in the right half of the window.
- Double-click on **Testing Messages for System Interface** shown in the list view. The dialog box **Generate Indications** is opened (see *Figure 3-22*).

Structure of the Dialog Box

In the column **Indication**, all message texts that were configured for the system interface in the matrix will then appear. In the column **Setpoint** you determine a value for the indications that shall be tested. Depending on the type of message different entering fields are available (e.g. ***message ON*** / ***message OFF***). By clicking on one of the buttons you can select the desired value from the pull-down menu.

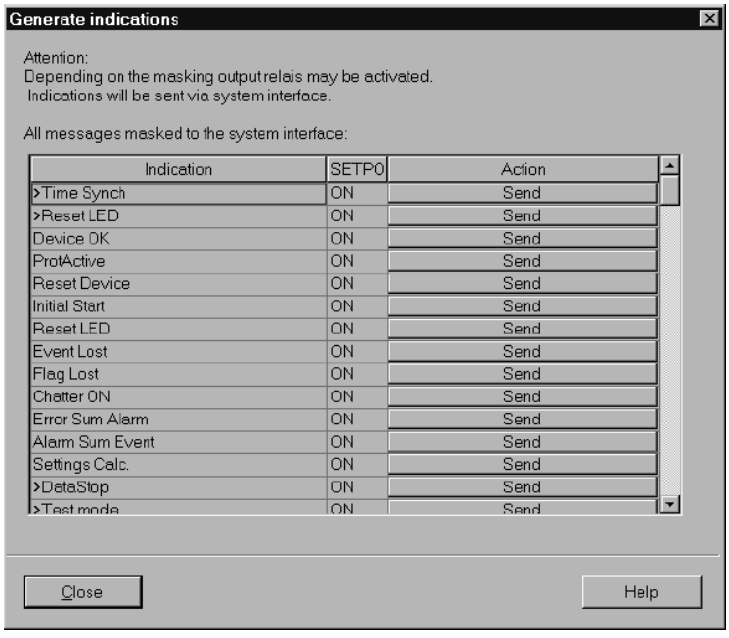

[schnittstelle-testen-110402-wlk, 1, en_GB]

Figure 3-22 System interface test with dialog box: Generating indications – Example

Changing the operating state

On clicking one of the buttons in the column **Action** you will be prompted for the password No. 6 (for hardware test menus). After correct entry of the password, individual annunciations can be initiated. To do so, click on the button **Send** in the corresponding line. The corresponding message is issued and can be read out either from the event log of the SIPROTEC4 device or from the substation control center.

Further tests remain enabled until the dialog box is closed.

Test in Indication Direction

For all information that is transmitted to the central station, test in **Setpoint** the desired options in the list which appears:

- Make sure that each checking process is carried out carefully without causing any danger (see above and refer to DANGER!)
- Click on Send and check whether the transmitted information reaches the control centre and shows the desired reaction. Data which are normally linked via binary inputs (first character ">") are likewise indicated to the control centre with this procedure. The function of the actual binary inputs is tested separately.

Exiting the Procedure

To end the System Interface Test, click on **Close**. The dialog box closes. The processor system is restarted, then the device is ready for operation.

Test in Command Direction

Data which are normally linked via binary inputs (first character ">") are likewise checked with this procedure. The information transmitted in command direction must be indicated by the central station. Check whether the reaction is correct.

3.3.4 Checking the switching states of the binary Inputs/Outputs

Prefacing Remarks

The binary inputs, outputs, and LEDs of a SIPROTEC 4 device can be individually and precisely controlled in DIGSI. This feature is used to verify control wiring from the device to plant equipment (operational checks) during commissioning. This test option should however definitely "not"" be used while the device is in service on a live system.



DANGER

A changing of switching states by means of the test function causes a real change of the operating state at the SIPROTEC 4 device. Connected operating equipment such as circuit breakers or disconnectors will be switched in this way!

Non-observance of the following measure will result in death, severe personal injury or substantial property damage.

✧ Equipment used to allow switching such as circuit breakers or disconnectors is to be checked only during commissioning. Do not under any circumstances check them by means of the testing mode during "real" operation performing transmission and reception of messages via the system interface.



NOTE

After termination of the hardware test the device will reboot. Thereby, all annunciation buffers are erased. If required, these buffers should be extracted with DIGSI prior to the test.

The hardware test can be carried out using DIGSI in the Online operating mode:

- Open the **Online** directory by double-clicking; the operating functions for the device appear.
- Click on **Test**; the function selection appears in the right half of the window.
- Double-click in the list view on **Device inputs and outputs**. The dialog box with this name is opened (see *Figure 3-23*).

Structure of the Dialog Box

The dialog box is divided into three groups: **BI** for binary inputs, **BO** for binary outputs and **LED** for LEDs. An accordingly labeled button is on the left of each group. By double-clicking a button, information regarding the associated group can be shown or hidden.

In the column **Status** the present (physical) state of the hardware component is displayed. Indication is displayed symbolically. The physical actual states of the binary inputs and outputs are indicated by an open or closed switch symbol, the LEDs by switched on or switched off symbol.

The opposite state of each element is displayed in the column **Scheduled**. The display is in plain text.

The right-most column indicates the commands or messages that are configured (masked) to the hardware components.

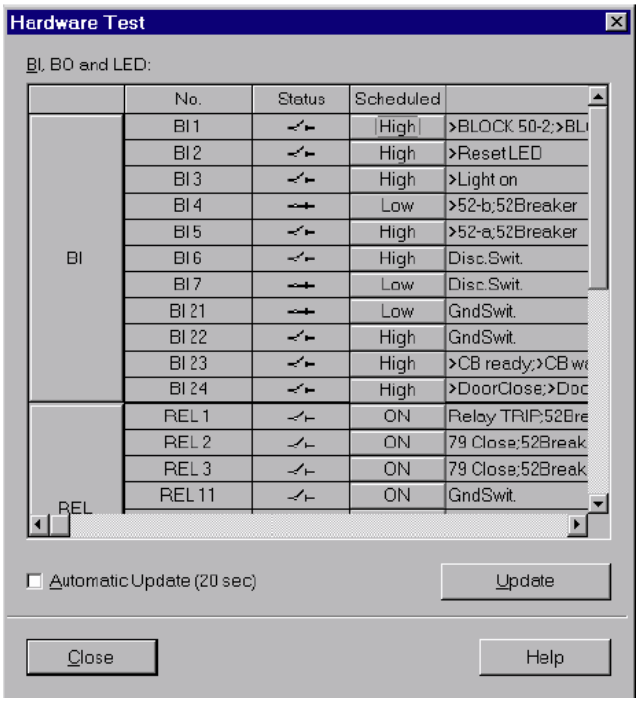

[ein-ausgabe-testen-110402-wlk, 1, en_GB]

Figure 3-23 Test of the Binary Inputs and Outputs — Example

Changing the operating state

To change the operating state of a hardware component, click on the associated switching field in the **Scheduled** column.

Before executing the first change of the operating state the password No. 6 will be requested (if activated during configuration). After entry of the correct password a condition change will be executed. Further state changes remain enabled until the dialog box is closed.

Test of the output relay

Each individual output relay can be energized allowing a check of the wiring between the output relay of the 7VK61 and the plant, without having to generate the message that is assigned to the relay. As soon as the first change of state for any of the output relays is initiated, all output relays are separated from the internal device functions, and can only be operated by the hardware test function. This means, that e.g. a TRIP command

coming from a protection function or a control command from the operator panel to an output relay cannot be executed.

Proceed as follows in order to check the output relay:

- Make sure that the switching operations caused by the output relays can be executed without any danger (see above under DANGER!).
- Each output relay must be tested via the corresponding **Scheduled** field of the dialog box.
- Finish the testing (see margin heading below “Exiting the Procedure”), so that during further testings no unwanted switchings are initiated.

Test of the binary inputs

To test the wiring between the plant and the binary inputs of the 7VK61the condition in the system which initiates the binary input must be generated and the response of the device checked.

To do so, open the dialog box **Hardware Test** again to view the physical position of the binary input. The password is not yet required.

Proceed as follows in order to check the binary inputs:

- Each state in the system which causes a binary input to pick up must be generated.
- Check the reaction in the **Status** column of the dialog box. To do this, the dialog box must be updated. The options may be found below under the margin heading “Updating the Display”.
- Finish the test sequence (see margin heading below “Exiting the Procedure”).

If, however, the effect of a binary input must be checked without carrying out any switching in the system, it is possible to trigger individual binary inputs with the hardware test function. As soon as the first state change of any binary input is triggered and the password No. 6 has been entered, all binary inputs are separated from the system and can only be activated via the hardware test function.

Test of the LEDs

The light-emitting diodes (LEDs) may be tested in a similar manner to the other input/output components. As soon as the first state change of any LED has been triggered, all LEDs are separated from the internal device functionality and can only be controlled via the hardware test function. This means e.g. that no LED is illuminated anymore by a protection function or by pressing the LED reset button.

Updating the Display

When the dialog box **Hardware Test** is opened, the present conditions of the hardware components at that moment are read in and displayed.

An update is made:

- For the particular hardware component, if a command for change to another state was successful,
- For all hardware components if the **Update** button is clicked,
- For all hardware components with cyclical updating (cycle time is 20 sec) if the **Automatic Update (20 sec)** field is marked.

Exiting the Procedure

To end the hardware test, click on **Close**. The dialog box closes. Thus, all the hardware components are set back to the operating state specified by the plant states. The processor system is restarted, then the device is ready for operation.

3.3.5 Checking for Breaker Failure Protection

General

If the device is equipped with the breaker failure protection and this function is used, the integration of this protection function into the system must be tested under practical conditions.

Because of the manifold applications and various configuration possibilities of the plant it is not possible to give a detailed description of the necessary test steps. It is important to consider the local conditions and the protection and plant drawings.

Before starting the circuit tests it is recommended to isolate the circuit breaker of the feeder to be tested at both ends, i.e. line disconnectors and busbar disconnectors should be open so that the breaker can be operated without risk.



CAUTION

Also for tests on the local circuit breaker of the feeder a trip command to the surrounding circuit breakers can be issued for the busbar.

Non-observance of the following measure can result in minor personal injury or property damage.

✧ First disable the trip commands to the adjacent (busbar) breakers, e.g. by interrupting the associated control voltages.

Before the breaker is closed again for normal operation the trip command of the feeder protection routed to the circuit breaker must be disconnected so that the trip command can only be initiated by the breaker failure protection.

Although the following list does not claim to be complete, it may also contain points which are to be ignored in the current application.

Auxiliary Contacts of the CB

The circuit breaker auxiliary contact(s) form an essential part of the breaker failure protection system in case they have been connected to the device. Make sure the correct assignment has been checked.

External Initiation Conditions

If the breaker failure protection can also be started by external protection devices, the external start conditions are checked. Depending on the device version and the setting of the breaker failure protection, 1-pole or 3-pole trip are possible. The pole discrepancy check of the device or the actual breaker may lead to 3-pole tripping after 1-pole tripping. Therefore check first how the parameters of the breaker failure protection are set. Also see Section *2.6.2 Setting Notes*, addresses 3901 ff.

In order for the breaker failure protection to be started, a current must flow at least through the monitored phase and the earth. This may be a secondary injected current.

After every start, the indication *BF Start* (No. 1461) must appear in the spontaneous indications or fault indications.

If only 1-pole initiation is possible:

- Start by 1-pole trip command of the external protectionL1 :

  Binary input functions *>BF Start L1* and if necessary *>BF release* (in spontaneous or fault indications). Trip command (dependent on settings).

- Start by 1-pole trip command of the external protectionL2 :

  Binary input functions *>BF Start L2* and if necessary *>BF release* (in spontaneous or fault indications). Trip command (dependent on settings).

- Start by 1-pole trip command of the external protectionL3 :

  Binary input functions *>BF Start L3* and if necessary *>BF release* (in spontaneous or fault indications). Trip command (dependent on settings).

- Start by 3-pole trip command of the external protection via all three binary inputs L1, L2 and L3:

  Binary input functions *>BF Start L1*, *>BF Start L2* and *>BF Start L3* and if necessary *>BF release* (in spontaneous or fault indications). 3-pole trip command.

For 3-pole initiation:

- Start by 3-pole trip command of the external protection :

  Binary input functions *>BF Start 3pole* and if necessary *>BF release* (in spontaneous or fault indications). Trip command (dependent on settings).

Switch off test current.

If start is possible without current flow:

- Starting by trip command of the external protection without current flow:

  Binary input functions *>BF Start w/o I* and if necessary *>BF release* (in spontaneous or fault indications). Trip command (dependent on settings).

Busbar tripping

The most important thing is the check of the correct distribution of the trip commands to the adjacent circuit breakers in case of breaker failure.

The adjacent circuit breakers are those of all feeders which must be tripped in order to ensure interruption of the fault current should the local breaker fail. These are therefore the circuit breakers of all feeders which feed the busbar or busbar section to which the feeder with the fault is connected.

A general detailed test guide cannot be specified because the layout of the adjacent circuit breakers largely depends on the system topology.

In particular with multiple busbars the trip distribution logic for the surrounding circuit breakers must be checked. Here check for every busbar section that all circuit breakers which are connected to the same busbar section as the feeder circuit breaker under observation are tripped, and no other breakers.

Tripping of the Remote End

If the trip command of the circuit breaker failure protection must also trip the circuit breaker at the remote end of the feeder under observation, the transmission channel for this remote trip must also be checked. This is done together with transmission of other signals according to Sections “Testing of the Teleprotection Scheme with ...” further below.

Termination of the Checks

All temporary measures taken for testing must be undone, e.g. especially switching states, interrupted trip commands, changes to setting values or individually switched off protection functions.

3.3.6 Current, Voltage, and Phase Rotation Testing

≥ 10 % of Load current

The connections of the current and voltage transformers are tested using primary quantities. Load current of at least 10 % of the nominal current of the device is necessary. The line is energized and will remain in this state during the measurements.

With proper connections of the measuring circuits, none of the measured-values supervision elements in the device should pick up. If an element detects a problem, the causes which provoked it may be viewed in the Event Log.

If current or voltage summation errors occur, then check the matching factors (see Section *2.1.3.1 Setting Notes*).

Messages from the symmetry monitoring could occur because there actually are asymmetrical conditions in the network. If these asymmetrical conditions are normal service conditions, the corresponding monitoring functions should be made less sensitive (see Section *2.7.1.6 Setting Notes*).

Quantities

Currents and voltages can be viewed in the display field on the front of the device or the operator interface via a PC. They can be compared to the actual measured values, as primary and secondary quantities.

If the measured values are not plausible, the connection must be checked and corrected after the line has been isolated and the current transformer circuits have been short-circuited. The measurements must then be repeated.

Phase Rotation

The phase rotation must correspond to the configured phase rotation, in general a clockwise phase rotation. If the system has an anti-clockwise phase rotation, this must have been considered when the power system data was set (address 235 **PHASE SEQ.**). Incorrect direction of rotation is indicated *Fail Ph. Seq.* (No. 171. The measured value phase allocation must be checked and corrected, if required, after the line has been isolated and current transformers have been short-circuited. The phase rotation check must then be repeated.

VT miniature circuit breaker

Open the miniature circuit breaker of the feeder voltage transformers. The measured voltages in the operational measured values appear with a value close to zero (small measured voltages are of no consequence).

Check in the spontaneous indications that the VT mcb trip was entered (Indication *>FAIL:Feeder VT* "ON" in the spontaneous indications). Beforehand it has to be assured that the position of the VT mcb is connected to the device via a binary input.

Close the VT mcb again: The above indication appears in the spontaneous indications as "OFF", i.e., *>FAIL:Feeder VT* "OFF"

If one of the annunciations does not appear, check the connection and allocation of these signals.

If the "ON" state and the "OFF" state are swapped, the contact type (H-active or L-active) must be checked and corrected.

If synchronism check is used and if the assigned VT mcb auxiliary contact is connected to the device, its function must also be checked. When switching off the protective switch the indication *>FAIL:U4 VT* "ON" appears, after switching on the protective switch the indication *>FAIL:U4 VT* "OFF" appears.

Switch off the protected power line.

3.3.7 Directional Check with Load Current

≥ 10 % of Load Current

The correct connection of the current and voltage transformers is tested via the protected line using the load current. For this purpose, connect the line. The load current the line carries must be at least $0.1 \cdot I_N$. The load current should be in-phase or lagging the voltage (resistive or resistive-inductive load). The direction of the load current must be known. If there is a doubt, network or ring loops should be opened. The line remains energized during the test.

The direction can be derived directly from the operational measured values. Initially the correlation of the measured load direction with the actual direction of load flow is checked. In this case the normal situation is assumed whereby the forward direction (measuring direction) extends from the busbar towards the line (see the following Figure).

P positive, if active power flows into the line,

P negative, if active power flows towards the busbar,

Q positive, if reactive power flows into the line,

Q negative, if reactive power flows toward the busbar.

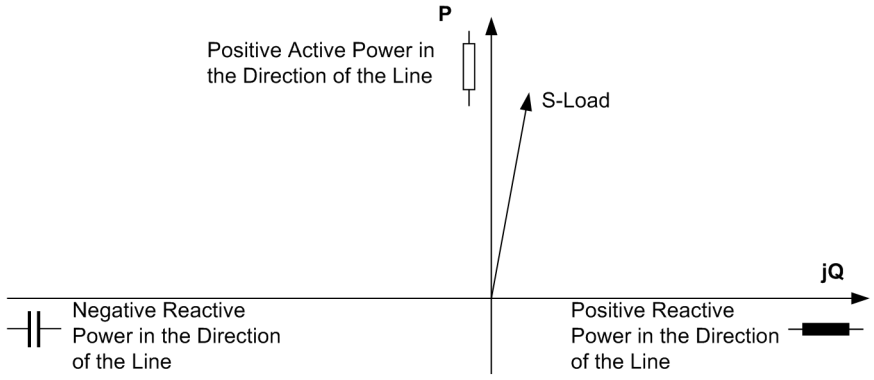

[lastscheinleistung-110402-wlk, 1, en_GB]

Figure 3-24 Apparent Load Power

The power measurement provides an initial indication as to whether the measured values have the correct polarity. If both the active power as well as the reactive power have the wrong sign, the polarity in address 201 **CT Starpoint** must be checked and rectified.

Finally, switch off the protected power line.

3.3.8 Polarity Check for the Voltage Input U_4

Depending on the application of the voltage measuring input U_4, a polarity check may be necessary. If no measuring voltage is connected to this input, this section is irrelevant.

If the input U_4 is used for measuring a voltage for overvoltage protection (**P.System Data 1** address 210 **U4 transformer** = ***Ux transformer***), no polarity check is necessary because the polarity is irrelevant here. The voltage magnitude was checked before.

If the input U_4 is used for the measurement of the displacement voltage U_{en} (**P.System Data 1** address 210 **U4 transformer** = ***Udelta transf.***), the polarity together with the current measurement is checked (see below).

If input U_4 is used for measuring a voltage for synchronism check (**P.System Data 1** address 210 **U4 transformer** = ***Usy2 transf.***), the polarity must be checked as follows using the synchronism check function.

Only for Synchronism Check

The device must be equipped with the synchronism and voltage check function which must be configured under address 135 ***Enabled*** (see section *2.1.1.2 Setting Notes*).

The synchronisation voltage U_{sy2} must be entered correctly at address 212 **Usy2 connection** (see Section *2.1.3.1 Setting Notes*).

If there is no transformer between the two measuring points, address 214 **φ Usy2-Usy1** must be set to *0°* (see Section *2.1.3.1 Setting Notes*).

If the measurement is made across a transformer, this angle setting must correspond to the phase rotation resulting from the vector group of the transformer (see also the example in Section*2.1.3.1 Setting Notes*).

If necessary, different transformation ratios of the transformers may have to be considered from both measuring points U_{sy1} and U_{sy2} at address 215 **Usy1/Usy2 ratio**.

The synchronism and voltage check must be switched ***ON*** under address 3501 **FCT Synchronism**.

An additional help for the connection check are the messages 2947 *Sync. Udiff>* and 2949 *Sync. ϕ-diff>* in the spontaneous annunciations.

- Circuit breaker is open. The feeder is isolated (zero voltage). The VTmcb's of both voltage transformer circuits must be closed.
- For the synchronism check the program **AR OVERRIDE** = ***YES*** (address 3519) is set; the other programs (addresses 3515 to 3518) are set to ***NO***.
- Via binary input (No.2906 *>Sync. Start AR*) initiate the measuring request. The synchronism check must release closing (message *Sync. release*, No. 2951). If not, check all relevant parameters again (synchrocheck configured and enabled correctly, see Sections *2.1.1.2 Setting Notes*, *2.1.3.1 Setting Notes* and *2.4.2 Setting Notes*).
- Address 3519 **AR OVERRIDE** must be set to ***NO***.
- Then the circuit breaker is closed while the line isolator is open (see *Figure 3-25*). Both voltage transformers therefore measure the same voltage.
- The program**AR SYNC-CHECK** = ***YES*** (address 3515) is set for synchronism check.
- Via binary input (No.2906 *>Sync. Start AR*) initiate the measuring request. The synchronism check must release closing (message *Sync. release*, No.2951).

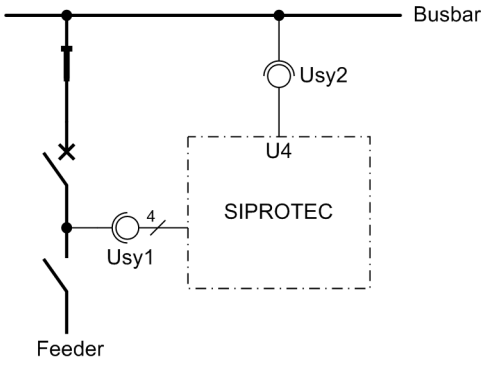

[synchronkontrolle-messspannungen-250702-kn, 1, en_GB]

Figure 3-25 Measuring voltages for the synchrocheck — example

- If not, first check whether one of the before named messages 2947 *Sync. Udiff>* or 2949 *Sync. ϕ-diff>* is available in the spontaneous messages.
  The indication *Sync. Udiff>* indicates that the magnitude (ratio) adaptation is incorrect. Check address 215 **Usy1/Usy2 ratio** and recalculate the adaptation factor, if necessary.
  The indication *Sync. ϕ-diff>* indicates that the phase relation, in this example of the busbar voltage, does not match the setting at address 212 **Usy2 connection** (see Section *2.1.3.1 Setting Notes*). When measuring across a transformer, address 214 **φ Usy2-Usy1** must also be checked; this must adapt the vector group (see Section*2.1.3.1 Setting Notes*). If these are correct, there is probably a reverse polarity of the voltage transformer terminals forU_{sy2}.
- The program **AR Usy1>Usy2<** = ***YES*** (address 3517) and **AR SYNC-CHECK** = ***YES*** (address 3515) is set for synchronism check.
- Open the VT mcb of the measuring point U_{sy2} (No. 362 *>FAIL:U4 VT*).
- Via binary input (No.2906 *>Sync. Start AR*) a measuring request is entered. There is no close release. If there is, the VT mcb for the measuring point U_{sy2} is not allocated. Check whether this is the required state, alternatively check the binary input *>FAIL:U4 VT* (No. 362).
- Reclose the VT mcb of the measuring point U_{sy2}.
- Open the circuit breaker.
- The program **AR Usy1<Usy2>** = ***YES*** (address 3516) and **AR Usy1>Usy2<** = ***NO*** (address 3517) is set for synchronism check.

- Via binary input (No.2906*>Sync. Start AR*) initiate the measuring request. The synchronism check must release closing (message *Sync. release*, No. 2951). If not, check all voltage connections and the corresponding parameters again carefully as described in Section *2.1.3.1 Setting Notes*.
- Open the VT mcb of the measuring pointU_{sy1} (No. 361 *>FAIL:Feeder VT*).
- Via binary input (No. 2906 *>Sync. Start AR*) initiate the measuring request. No close release is given.
- Reclose the VT mcb of the measuring point U_{sy1} wieder einschalten.

Addresses 3515 to 3519must be restored as they were changed for the test. If the allocation of the LEDs or signal relays was changed for the test, this must also be restored.

3.3.9 Polarity Check for the Current Input I_4

If the standard connection of the device is used whereby current input I_4 is connected in the starpoint of the set of current transformers (refer also to the connection circuit diagram in the Appendix *C Connection Examples*), then the correct polarity of the earth current path in general automatically results.

If, however, the current I_4 is supplied by a separate summation CT, an additional direction check for this current is necessary.

Apart from that the test is carried out with a disconnected trip circuit and primary load current. It must be noted that during all simulations not exactly corresponding with cases that occur in practice, the asymmetry of measured values may cause the measured value monitoring to pick up. They must therefore be ignored during such tests.



DANGER

Hazardous voltages during interruptions in secondary circuits of current transformers

Non-observance of the following measure will result in death, severe personal injury or substantial property damage.

✧ Short-circuit the current transformer secondary circuits before current connections to the device are opened.



NOTE

If parameters were changed for this test, they must be returned to their original state after completion of the test!

3.3.10 Measuring the Operating Time of the Circuit Breaker

Only for Synchronism Check

If the device is equipped with the function for synchronism and voltage check and it is applied, it is necessary - under asynchronous system conditions - that the operating time of the circuit breaker is measured and set correctly when closing. If the synchronism check function is not used or only for closing under synchronous system conditions, this section is irrelevant.

For measuring the operating time a setup as shown in *Figure 3-26* is recommended. The timer is set to a range of 1 s and a graduation of 1 ms.

The circuit breaker is closed manually. At the same time the timer is started. After closing the circuit breaker poles the voltage U_{sy1} or U_{sy2}appears and the timer is stopped. The time displayed by the timer is the real circuit breaker closing time.

If the timer is not stopped due to an unfavourable closing moment, the attempt will be repeated.

It is particularly favourable to calculate the mean value from several (3 to 5) successful switching attempts.

Set the calculated time under address 239 als **T-CB close** (under **P.System Data 1**). Select the next lower settable value.

NOTE

The operating time of the accelerated output relays for command tripping is taken into consideration by the device itself. The trip command is to be allocated to such a relay. If this is not the case, then add 3 ms to the measured circuit breaker operating time for achieving a greater response time of the “normal” output relay.

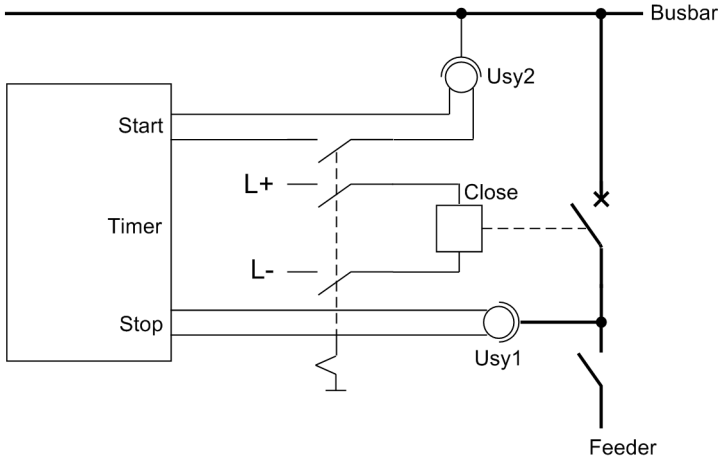

[messung-der-ls-eigenzeit-260602-kn, 1, en_GB]

Figure 3-26 Measuring the circuit breaker closing time

3.3.11 Check of the Signal Transmission for Breaker Failure Protection and/or End Fault Protection

If the transfer trip command for breaker failure protection or stub fault protection is to be transmitted to the remote end, this transmission must also be checked.

To check the transmission the breaker failure protection function is initiated by a test current (secondary) with the circuit breaker in the open position. Make sure that the correct circuit breaker reaction takes place at the remote end.

Each transmission path must be checked on lines with more than two ends.

3.3.12 Testing User-defined Functions

The device has a vast capability for allowing functions to be defined by the user, especially with the CFC logic. Any special function or logic added to the device must be checked.

A general procedure cannot in the nature of things be specified. Configuration of these functions and the set value conditions must be actually known beforehand and tested. Especially, possible interlocking conditions of the switching devices (circuit breakers, isolators, grounding electrodes) must be observed and checked.

3.3.13 Trip and Close Test with the Circuit Breaker

The circuit breaker and tripping circuits can be conveniently tested by the device 7VK61.

The procedure is described in detail in the SIPROTEC 4 System Description.

If the check does not produce the expected results, the cause may be established from the text in the display of the device or the PC. If necessary, the connections of the circuit breaker auxiliary contacts must be checked:

It must be noted that the binary inputs used for the circuit breaker auxiliary contacts must be assigned separately for the CB test. This means it is not sufficient that the auxiliary contacts are allocated to the binary inputs No. 351 to 353, 379 and/or 380 (according to the possibilities of the auxiliary contacts); additionally, the corresponding No. 366 to 368 or 410 and/or 411 must be allocated (according to the possibilities of the auxiliary contacts). In the CB test only the latter ones are analyzed. See also Section *2.8.2 Circuit breaker trip test*. Furthermore, the ready state of the circuit breaker for the CB test must be indicated to the binary input with No. 371.

3.3.14 Switching Test of the Configured Operating Equipment

Switching by Local Command

If the configured operating devices were not switched sufficiently in the hardware test already described, all configured switching devices must be switched on and off from the device via the integrated control element. The feedback information of the CB position injected via binary inputs should be read out and compared with the actual breaker position.

For devices with graphic display this is easy to do with the control display.

The switching procedure is described in the SIPROTEC 4 System Description. The switching authority must be set in correspondence with the source of commands used. With the switching mode, you can choose between locked and unlocked switching. In this case, you must be aware that unlocked switching is a safety risk.

Switching from a Remote Control Centre

If the device is connected to a remote substation via a system (SCADA) interface, the corresponding switching tests may also be checked from the substation. Please also take into consideration that the switching authority is set in correspondence with the source of commands used.

3.3.15 Triggering Oscillographic Recording for Test

In order to verify the reliability of the protection relay even during inrush processes, closing tests can be carried out to conclude the commissioning process. Oscillograhpic records provide the maximum information about the behavior of the protection relay.

Prerequisite

Along with the capability of storing fault recordings via pickup of the protection function, the 7VK61 also has the capability of capturing the same data when commands are given to the device via the DIGSI software, the serial interface, or a binary input. For the latter, the information *>Trig.Wave.Cap.* must be allocated to a binary input. In this case, a fault record is triggered e.g. via binary input when the protected object is energized.

Such a test fault record triggered externally (i.e. not caused by pickup of a protection function) is processed like a normal oscillographic record, i.e. a fault log with number is generated which univocally identifies an oscillographic record. However, these recordings are not displayed in the trip log as they are not fault events.

Start Test Measurement Recording

To trigger test measurement recording with DIGSI, click on **Test** in the left part of the window. Double click in the list view the **Test Wave Form** entry (see *Figure 3-27*).

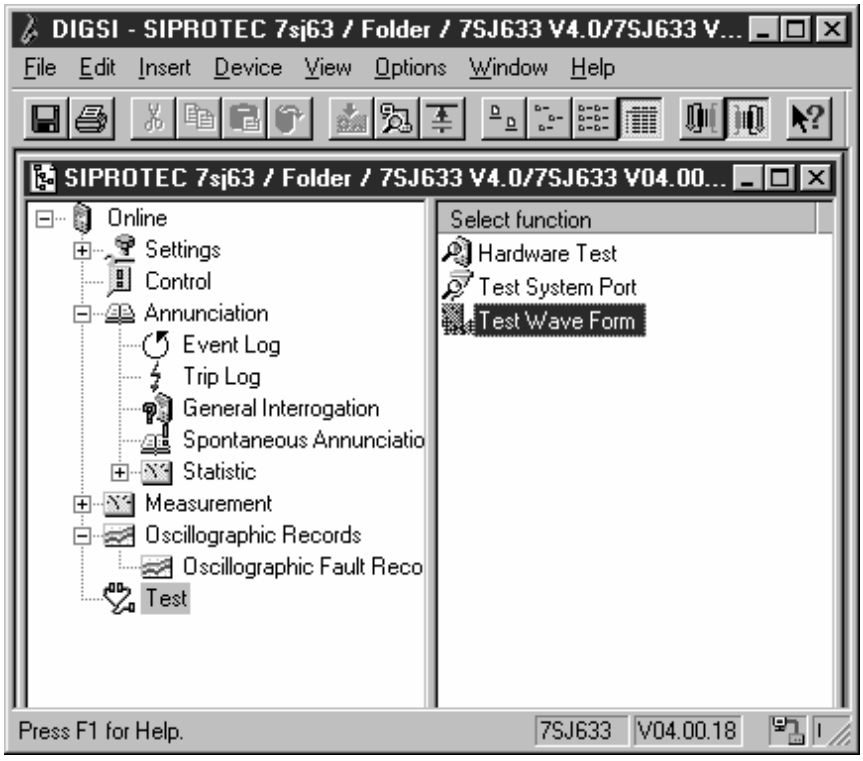

[7sa-testmessschrieb-starten-310702-kn, 1, en_GB]

Figure 3-27 Triggering oscillographic recording with DIGSI — example

Oscillographic recording is immediately started. During the recording, an annunciation is output in the left area of the status line. Bar segments additionally indicate the progress of the procedure.

The SIGRA or the Comtrade Viewer program is required to view and analyze the oscillographic data.

3.4 Final Preparation of the Device

The used terminal screws must be tightened, including those that are not used. All the plug connectors must be correctly inserted.



CAUTION

Do not apply force!

The tightening torques must not be exceeded as the threads and terminal chambers may otherwise be damaged!

✧

The setting values should be checked again if they were changed during the tests. Check if protection, control and auxiliary functions to be found with the configuration parameters are set correctly (Section *2.1.1 Functional Scope*, Functional Scope). All desired functions must be switched ***ON***. Ensure that a copy of the setting values is stored on the PC.

Check the internal clock of the device. If necessary, set the clock or synchronize the clock if the element is not automatically synchronized. Further details on this subject are described in */1/ SIPROTEC 4 System Description*.

The indication buffers are deleted under **Main Menu** → **Annunciation** → **Set/Reset**, so that in the future they only contain information on actual events and states. The numbers in the switching statistics should be reset to the values that were existing prior to the testing.

The counters of the operational measured values (e.g. operation counter, if available) are reset under Main **Menu** → **Measurement** → **Reset**.

Press the**ESC** key, several times if necessary, to return to the default display.

Clear the LEDs on the front panel by pressing the **LED** key, so that they only show real events and states. In this context, saved output relays are reset, too. Pressing the **LED** key also serves as a test for the LEDs on the front panel because they should all light when the button is pressed. If the LEDs display states relevant by that moment, these LEDs, of course, stay lit.

The green “RUN” LED must light up, whereas the red “ERROR” must not light up.

Close the protective switches. If test switches are available, then these must be in the operating position.

The device is now ready for operation.

4 Technical Data

This chapter presents the technical data of SIPROTEC 4 7VK61 device and its individual functions, including the limit values that must not be exceeded under any circumstances. The electrical and functional data of fully equipped devices are followed by the mechanical data, with dimensional drawings.

4.1	General	226
4.2	Automatic reclosure function (optional)	235
4.3	Overcurrent protection (optional)	236
4.4	Synchronism and voltage check (optional)	243
4.5	Under and over-voltage protection (optional)	244
4.6	Circuit breaker failure protection (optional)	247
4.7	Monitoring Functions	248
4.8	User-defined Functions (CFC)	250
4.9	Auxiliary Functions	254
4.10	Dimensions	256

4.1 General

4.1.1 Analogue Inputs and Outputs

Current Inputs

Nominal Frequency	f_N	50 Hz or 60 Hz	(adjustable)
Nominal current	I_N	1 A or 5 A	
Power consumption per phase and earth path			
- for I_N = 1 A		approx. 0.05 VA	
- for I_N = 5 A		approx. 0.3 VA	
Current Path Loadability			
- thermal (rms)		100 · I_N for 1 s 30 · I_N for 10 s 4 · I_N continuous	
- dynamic (peak)		250 · I_N (half cycle)	

Voltage Inputs

Rated Voltage	U_N	80 V to 125 V	(adjustable)
Power consumption per phase	at 100 V	0.1 VA	
Voltage Overload Capability in Voltage Path per Input			
- thermal (rms)		230 V continuously	

4.1.2 Auxiliary Voltage

Direct Voltage

Voltage supply using integrated converter			
Rated auxiliary DC voltage U_{Aux}-	DC 24 V/48 V	DC 60 V/110 V/125 V	DC 110/125 V/220 V/ 250 V
admissible voltage ranges	DC 19 V to 58 V	DC 48 V to 150 V	DC 88 to 300 V
Permissible AC ripple voltage, Peak to peak	≤ 15 % of the auxiliary nominal voltage		
Power input			
- quiescent		Approx. 5 W	
- energized	7VK610	Approx. 8 W	
	7VK611	Approx. 14 W	
Plus approx. 1.5 W per interface module			
Bridging time for power supply failure/short circuit	≥ 50 ms at U_{Aux} = 48 V and U_{Aux} ≥ 110 V		
≥ 20 ms at U_{Aux} = 24 V and U_{Aux} ≥ 60 V,	≥ 20 ms bei U_H = 24 V and U_H = 60 V		

AC Voltage

Voltage supply using integrated converter		
Nominal auxiliary AC voltage U_{Aux}	AC 115 V	AC 230 V
admissible voltage ranges	AC 92 V to 132 V	AC 184 V to 265 V

Power input		
- quiescent		approx. 7 VA
- energized	7VK610	approx.12 VA
7VK611	approx. 17 VA	
plus approx. 1.5 VA per interface module		
Bridging time for failure/short circuit of alternating auxiliary voltage	≥ 50 ms	

4.1.3 Binary Inputs and Outputs

Binary Inputs

Variant	Quantity	
7VK610	7 (configurable)	
7VK611	20 (configurable)	
Rated voltage range	DC 24 V to 250 V, in 3 ranges, bipolar	
Switching Thresholds	pluggable via jumpers	
- for rated voltages	DC 24 V/48 V DC 60 V/110 V/125 V	Uin ≥ DC 19 V Uout ≤ DC 14 V
- for rated voltages	DC 110 V/125 V/220 V/250 V	Uin ≥ DC 88 V Uout ≤ DC 66 V
- for rated voltages	DC 220 V/250 V	Uin ≥ DC 176 V Uout ≤ DC 117 V
Current consumption, energized	Approx. 1.8 mA independent of the control voltage	
Maximum admissible voltage	DC 300 V	
Input Impulse suppression	220 nF coupling capacitance at 220 V with a recovery time > 60 ms	

Output Relay

Signaling/command relays (see also overview diagrams in Appendix A)			
Quantity and information	depending on ordered version:		
Order variant	NO-contact (normal)	NO-contact (fast)	NO/NC (switchable)
7VK610	5	-	—
7VK611	10	5	3
Switching Capability MAKE	1000 W/VA		
Switching capability OFF	30 VA 40 W resistive 25 W at L/R ≤ 50 ms		
Switching voltage			
DC	250 V		
AC	250 V		
admissible current per contact (continuous)	5 A		
admissible current per contact (close and hold)	30 A for 0.5 s (NO)		
Total permissible current for contacts connected to common potential	5 A continuously 30 A for 0.5 s		
Closing time, approx.	8 ms	5 ms	8 ms
Alarm relay	with 1 NC contact or 1 NO contact (switchable)		

Switching Capability MAKE	1000 W/VA
Switching capability OFF	30 VA 40 W resistive 25 W at L/R ≤ 50 ms
Switching voltage	250 V
Permissible current per contact	5 A continuously 30 A for 0.5 s
Interference suppressions capacitors across relay contacts	Ceramic, 4,7 nF, 250 V

4.1.4 Communication Interfaces

Operator Interface

Connection	Front side, non-isolated, RS232, 9-pin D-subminiature female connector for connection of a PC
Operation	With DIGSI
Transmission rate	Min. 4800 Baud; max. 115200 Baud; Factory Setting: 38400 Baud; Parity: 8E1
Transmission distance	15 m / 50 feet

Service/Modem Interface

Connection acc. to ordered variant	Isolated interface for data transfer
Operation	with DIGSI
RS232/RS485	
Connection for flush mounted case	Rear panel, mounting location “C”, 9-pin D-subminiature female connector; Shielded data cable
Connection for surface mounted case	In console housing on the bottom side; 9-pin D-subminiature female connector; Shielded data cable
Test voltage	500 V; 50 Hz
Transmission rate	Min. 4800 Baud; max. 115200 Baud Factory setting 38400 Baud
RS232	
Maximum transmission distance	15 m
RS485	
Maximum transmission distance	1000 m

System Interface (optional)

Connection acc. to version ordered	potentialfreie Schnittstelle für Datentransfer zu einer Leitstelle
RS232	
Connection for flush-mounted housing	rear panel, slot “B”, 9-pole D-subminiature female connector
Connection for surface-mounted housing	at the bottom side of the console housing 9-pole D-subminiature female connector

Test voltage	500 V; 50 Hz
Transmission rate	min. 4800 Baud, max. 38400 Baud Factory setting 19200 Baud
Transmission distance	max. 15 m
RS485	
Connection for flush-mounted housing	rear panel, slot “B”, 9-pole D-subminiature female connector
Connection for surface-mounted housing	at the bottom side of the console housing 9-pole D-subminiature female connector
Test voltage	500 V; 50 Hz
Transmission rate	min. 4800 Baud, max. 38400 Baud Factory setting 19200 Baud
Transmission distance	max. 1 km
Optical fibre cable (FO	
FO connector type	ST connector
Connection for flush-mounted housing	rear panel, slot “B”
Connection for surface-mounted housing	at bottom side of the console housing
Optical wavelength	λ = 820 nm
Laser class 1 according to EN 60825-1/-2	Using glass fiber 50/125 µm or Using glass fibre 62.5/125 µm
Permissible optical signal attenuation	Max. 8 dB, with glass fibre 62.5/125 µm
Maximum transmission distance	max. 1.5 km
Character idle state	Selectable, factory setting”Light off”
Profibus RS485 (FMS and DP)	
Connection for flush-mounted housing	rear panel, slot “B”, 9-pole D-subminiature female connector
Connection for surface-mounted housing	at the bottom side of the console housing 9-pole D-subminiature female connector
Test voltage	500 V; 50 Hz
Transmission rate	bis 12 MBaud
Transmission distance	1000 m at ≤ 93.75 kBaud 500 m at ≤ 187.5 kBaud 200 m at ≤ 1.5 MBaud 100 m at ≤ 12 MBaud
Profibus FO (FMS and DP)	
FO connector type	ST connector single ring / double ring FMS: depending on ordered version; DP: only double ring available
Connection for flush-mounted housing	rear panel, slot “B”
Connection for surface-mounted housing	Please use the version with Profibus RS485 in the console housing and a separate electrical/ optical converter.
Transmission rate	Conversion by means of external OLM up to 1.5 MBaud ≥ 500 kBaud for normal version ≤ 57600 Baud with detached operator panel
Recommended transmission rate:	> 500 kBaud
Optical wavelength	λ = 820 nm
Laser class 1 according to EN 60825-1/-2	Using glass fiber 50/125 µm or Using glass fibre 62.5/125 µm

Permissible optical signal attenuation	Max. 8 dB, with glass fibre 62.5/125 µm
Transmission distance between two modules with redundant optical ring topology and glass fibre 62.5/125 m	2 m with plastic fibre 500 kBit/s max. 1.6 km 1500 kBit/s 530 m
Character idle state (status for "No character")	Light OFF
Max. number of modules in optical rings with 500 kB/s or 1500 kB/s	41
DNP3.0 RS485	
Connection for flush-mounted housing	rear panel, slot "B", 9-pole D-subminiature female connector
Connection for surface-mounted housing	in console housing
Test voltage	500 V; 50 Hz
Transmission rate	up to 19200 Baud
Transmission distance	max. 1 km
DNP3.0 FO	
FO connector type	ST connector receiver/transmitter
Connection for flush-mounted housing	rear panel, slot "B"
Connection for surface-mounted housing	in console housing
Transmission rate	up to 19200 Baud
Optical wavelength	λ = 820 nm
Laser class 1 according to EN60825-1/-2	Using glass fibre 50/125 µm or Using glass fibre 62.5/125 µm
Permissible optical signal attenuation	max. 8 dB, with glass fibre 62.5/125 µm
Transmission distance	max. 1.5 km
Ethernet electrical (EN 100) for IEC 61850 and DIGSI	
Connection for flush-mounted housing	rear panel, slot "B" 2 x RJ45 female connector 100BaseT acc. to IEEE802.3
Connection for surface-mounted housing	in console housing
Test voltage (female connector)	500 V; 50 Hz
Transmission rate	100 MBit/s
Transmission distance	20 m
Ethernet optical (EN100) for IEC 61850 and DIGSI	
FO connector type	ST connector receiver/transmitter
Connection for flush-mounted housing	rear panel, slot "B"
Connection for surface-mounted housing	not available
Transmission rate	λ = 1310 nm
Optical wavelength	100 MBit/s
Laser class 1 according to EN60825-1/-2	Using glass fibre 50 µm/125 µm or Using glass fibre 62,5 µm/125 µm
Permissible optical signal attenuation	max. 5 dB, with glass fibre 62,5 µm/125 µm
Transmission distance	max. 800 m

Time Synchronisation Interface

Time synchronization	DCF77/IRIG B signal (telegram format IRIG-B000)
Connection for flush-mounted housing	rear panel, slot "A"; 9-pole D-subminiature female connector
Connection for surface-mounted housing	At the double-deck terminal on the case bottom
Signal nominal voltages	Selectable 5 V, 12 V or 24 V
Test voltage	500 V; 50 Hz

Signal levels and burdens DCF77/IRIG-B:			
	Nominal Signal Voltage		
	5 V	**12 V**	**24 V**
U_{IHigh}	6.0 V	15.8 V	31 V
U_{ILow}	1.0 V at I_{ILow} = 0.25 mA	1.4 V at I_{ILow} = 0.25 mA	1.9 V at I_{ILow} = 0.25 mA
I_{IHigh}	4.5 mA to 9.4 mA	4.5 mA to 9.3 mA	4.5 mA to 8.7 mA
R_I	890 Ω at U_I = 4 V	1930 Ω at U_I = 8.7 V	3780 Ω at U_I = 17 V
	640 Ω at U_I = 6 V	1700 Ω at U_I = 15.8 V	3560 Ω at U_I = 31 V

4.1.5 Electrical Tests

Specifications

Standards:	IEC 60255 (product standards)) IEEE Std C37.90.0/.1/.2 VDE 0435 For more standards see also individual functions

Insulation Test

Standards:	IEC 60255-5 and IEC 60870-2-1
High voltage test (routine test) All circuits except power supply, Binary Inputs, Communication Interface and Time Synchronization Interfaces	2.5 kV (rms), 50 Hz
High voltage test (routine test) Auxiliary voltage and binary inputs	DC 3.5 kV
High voltage test (routine test) only isolated communication and time synchronization interfaces	500 V (rms), 50 Hz
Impulse voltage test (type test) All Circuits Except Communication and Time Synchronization Interfaces, Class III	5 kV (peak), 1.2/50 µs, 0.5 Ws, 3 positive and 3 negative impulses at intervals of 5 s

EMC Tests for Interference Immunity (Type Tests)

Standards:	IEC 60255-6 and -22, (product standards) EN 61000-6-2 (generic standard) VDE 0435 part 301DIN VDE 0435-110
High frequency test IEC 60255-22-1, Class III and VDE 0435 Teil 303, Class III	2.5 kV (Peak); 1 MHz; τ = 15 µs; 400 surges per s; test duration 2 s; R_i = 200 Ω

Electrostatic discharge IEC 60255-22-2, Class IV and IEC 61000-4-2, Class IV	8 kV contact discharge; 15 kV air discharge, both polarities; 150 pF; R_i = 330 Ω
Irradiation with HF field, frequency sweep IEC 60255-22-3, Class III IEC 61000-4-3, Class III	10 V/m; 80 MHz to 1000 MHz; 80 % AM; 1 kHz 10 V/m; 800 MHz to 960 MHz; 80 % AM; 1 kHz 20 V/m; 1,4 GHz to 2,0 GHz; 80 % AM; 1 kHz
Irradiation with HF field, single frequencies IEC 60255-22-3, IEC 61000-4-3, Class III – amplitude-modulated – pulse-modulated	 10 V/m 80 MHz; 160 MHz; 450 MHz; 900 MHz; 80 % AM; 1 kHz; duty cycle > 10 s 900 MHz; 50 % PM, repetition frequency 200 Hz
Fast transient disturbances Burst IEC 60255-22-4 and IEC 61000-4-4, Class IV	4 kV; 5 ns/50 ns; 5 kHz; burst length = 15 ms; repetition 300 ms; both polarities; R_i = 50 Ω; test duration 1 min
High energy surge voltages (SURGE), IEC 61000-4-5 installation Class 3 - Auxiliary voltage – Analog measuring inputs, binary inputs, relay outputs	Pulse: 1.2 µs/50 µs common mode: 2 kV; 12 Ω; 9 µF diff. mode: 1 kV; 2 Ω; 18 µF common mode: 2 kV; 42 Ω; 0,5 µF diff. mode: 1 kV; 42 Ω; 0,5 µF
Line conducted HF, amplitude modulated IEC 61000-4-6, Class III	10 V; 150 kHz to 80 MHz; 80 % AM; 1 kHz
Power system frequency magnetic field IEC 60255-6 IEC 61000-4-8, Class IV	 0,5 mT; 50 Hz, 30 A/m continuous; 300 A/m for 3 s; 50 Hz
Oscillatory Surge Withstand Capability IEEE Std C37.90.1	2.5 kV (Peak); 1 MHz; τ = 15 µs; 400 Surges per s; test duration 2 s; R_i = 200 Ω
Fast Transient Surge Withstand Cap. IEEE Std C37.90.1	4 kV; 5 ns/50 ns; 5 kHz; burst length = 15 ms; repetition rate 300 ms; both polarities; R_i = 50 Ω; test duration 1 min
Radiated Electromagnetic Interference IEEE Std C37.90.2	35 V/m; 25 MHz to 1000 MHz
Damped oscillations IEC 60694, IEC 61000-4-12	2.5 kV (peak value), polarity alternating 100 kHz, 1 MHz, 10 MHz and 50 MHz R_i = 200 Ω

EMC Tests for Interference Emission (Type Test)

Standard:	EN 61000-6-3 (generic standard)
Radio noise voltage to lines, only auxiliary voltage IECCISPR 22	150 kHz to 30 MHz Limit class B
Interference field strength IEC-CISPR 22	30 MHz to 1000 MHz Limit class B
Harmonic currents on the network lead at AC 230 V IEC 61000-3-2	Class A limits are observed
Voltage fluctuations and flicker on the network lead at AC 230 V IEC 61000-3-3	Limits are observed

4.1.6 Mechanical Tests

Vibration and Shock Resistance during Stationary Operation

Standards:	IEC 60255-21 and IEC 60068
Oscillation IEC 60255-21-1, Class 2 IEC 60068-2-6	Sinusoidal 10 Hz to 60 Hz: ± 0,075 mm amplitude; 60 Hz to 150 Hz: 1 g Acceleration Frequency sweep 1 octave/min 20 cycles in 3 orthogonal axes
Shock IEC 60255-21-2, Class 1 IEC 60068-2-27	Semi-sinusoidal 5 g acceleration, duration 11 ms, each 3 shocks (in both directions of the 3 axes)
Seismic vibration IEC 60255-21-3, Class 1 IEC 60068-3-3	Sinusoidal 1 Hz to 8 Hz: ± 3,5 mm amplitude (horizontal axis) 1 Hz to 8 Hz: ± 1,5 mm amplitude (vertical axis) 8 Hz to 35 Hz: 1 g acceleration (horizontal axis) 8 Hz to 35 Hz: 0,5 g acceleration (vertical axis) Frequency sweep 1 octave/min 1 cycle in 3 orthogonal axes

Vibration and Shock Resistance during Transport

Standards:	IEC 60255-21 and IEC 60068
Oscillation IEC 60255-21-1, Class 2 IEC 60068-2-6	Sinusoidal 5 Hz to 8 Hz: ± 7,5 mm amplitude; 8 Hz to 150 Hz: 2 g acceleration frequency sweep 1 octave/min 20 cycles in 3 orthogonal axes
Shock IEC 60255-21-2, Class 1 IEC 60068-2-27	Semi-sinusoidal 15 g acceleration, duration 11 ms, each 3 shocks (in both directions of the 3 axes)
Continuous shock IEC 60255-21-2, Class 1 IEC 60068-2-29	Semi-sinusoidal 10 g acceleration, duration 16 ms, 1000 shocks each in both directions of the 3 axes

4.1.7 Climatic Stress Tests

Temperatures

Standards:	IEC 60255-6
Type tested (acc. IEC 60086-2-1 and -2, Test Bd)	-25 °C to +85 °C or -13 °F to +185 °F
Admissible temporary operating temperature (tested for 96 h)	-20 °C to +70 °C or -4 °F to +158 °F (legibility of display may be restricted from +55 °C or 131 °F)
Recommended for permanent operation (according to IEC 60255-6)	-5 °C to +55 °C or 23 °F to +131 °F If max. half of the inputs and outputs are subjected to the max. permissible values
Limit temperatures for storage	-25 °C to +55 °C or -13 °F to +131 °F
Limit temperatures during transport	-25 °C to +70 °C or -13 °F to +158 °F
Storage and transport of the device with factory packaging!	

Humidity

Admissible humidity	Annual average ≤ 75 % relative humidity; On 56 days of the year up to 93% relative humidity. Condensation must be avoided in operation!
It is recommended that all devices be installed so that they are not exposed to direct sunlight nor subject to large fluctuations in temperature that may cause condensation to occur.	

4.1.8 Deployment Conditions

The protection device is designed for installation in normal relay rooms and plants, so that electromagnetic immunity is ensured if installation is done properly.

In addition the following is recommended:

- Contacts and relays operating within the same cabinet or on the same relay board with digital protection equipment, should be in principle provided with suitable surge suppression components.
- For substations with operating voltages of 100 kV and above, all external cables shall be shielded with a conductive shield earthed at both ends. For substations with lower operating voltages, no special measures are normally required.
- For substations with lower operating voltages, no special measures are normally required. When removed, many components are electrostatically endangered; when handling the EEC standards (standards for **E**lectrostatically **E**ndangered **C**omponents) must be observed. The modules, boards, and device are not endangered when the device is completely assembled.

4.1.9 Construction

Case	7XP20
Dimensions	See dimensional drawings, Section *4.10 Dimensions*

Device	Case	Size	Weight (for maximum number of components)
7VK610	in flush mounting housing	$^1/_3$	5 kg
	in surface mounting housing	$^1/_3$	9,5 kg
7VK611	in flush mounting housing	$^1/_2$	6 kg
	in surface mounting housing	$^1/_2$	11 kg

Protection class acc. to IEC 60529		
For surface mounting housing equipment		IP 51
For equipment of the flush-mount housing		
	Front	IP 51
	Rear	IP 50
For personnel protection		IP 2x with cover in place

4.2 Automatic reclosure function (optional)

Automatic Reclosures

Number of reclosures	Max. 8, first 4 with individual settings	
Type (depending on ordered version)	1-pole, 3-pole or 1-/3-pole	
Control	With pickup or trip command	
Action Times Initiation possible without pickup and action time	0.01 s to 300.00 s; ∞	Increments 0.01 s
Different dead times before reclosure can be set for all operating modes and cycles	0.01 s to 1800.00 s; ∞	Increments 0.01 s
Dead times after evolving fault recognition	0,01 s to 1800,00 s	Increments 0.01 s
Reclaim time after successful AR cycle	0,50 s to 300,00 s	Increments 0.01 s
Blocking time after dynamic Blocking	0.5 s	
Blocking time after manual closing	0.50 s to 300.00 s; 0	Increments 0.01 s
Start signal monitoring time	0,01 s to 300,00 s	Increments 0.01 s
Circuit breaker monitoring time	0,01 s to 300,00 s	Increments 0.01 s

Adaptive Dead Time/Reduced Dead Time/Dead Line Check

Adaptive dead time	With voltage measurement or with close command transmission	
Action Times Initiation possible without pickup and action time	0.01 s to 300.00 s; ∞	Increments 0.01 s
Maximum dead time	0,50 s to 3000,00 s	Increments 0.01 s
Voltage measurement dead line or bus	2 V to 70 V (Ph-E)	Increments 1 V
Voltage measurement live or bus	30 V to 90 V (Ph-E)	Increments 1 V
Voltage measuring time	0,10 s to 30,00 s	Increments 0.01 s
Time delay for close command transmission	0.00 s to 300.00 s; ∞	Increments 0.01 s

4.3 Overcurrent protection (optional)

Operating Modes

OFF	Function is disabled
ON	Function is active independently

Characteristic Curves

Definite time stages (definite)	I_{Ph}>>>, $3I_0$>>>, I_{Ph}>>,$3I_0$>>, I_{Ph}>, $3I_0$>
Inverse time stages (IDMTL)	I_P, $3I_{0P}$; one of the characteristics according *Figure 4-1* to *Figure 4-3* can be selected.

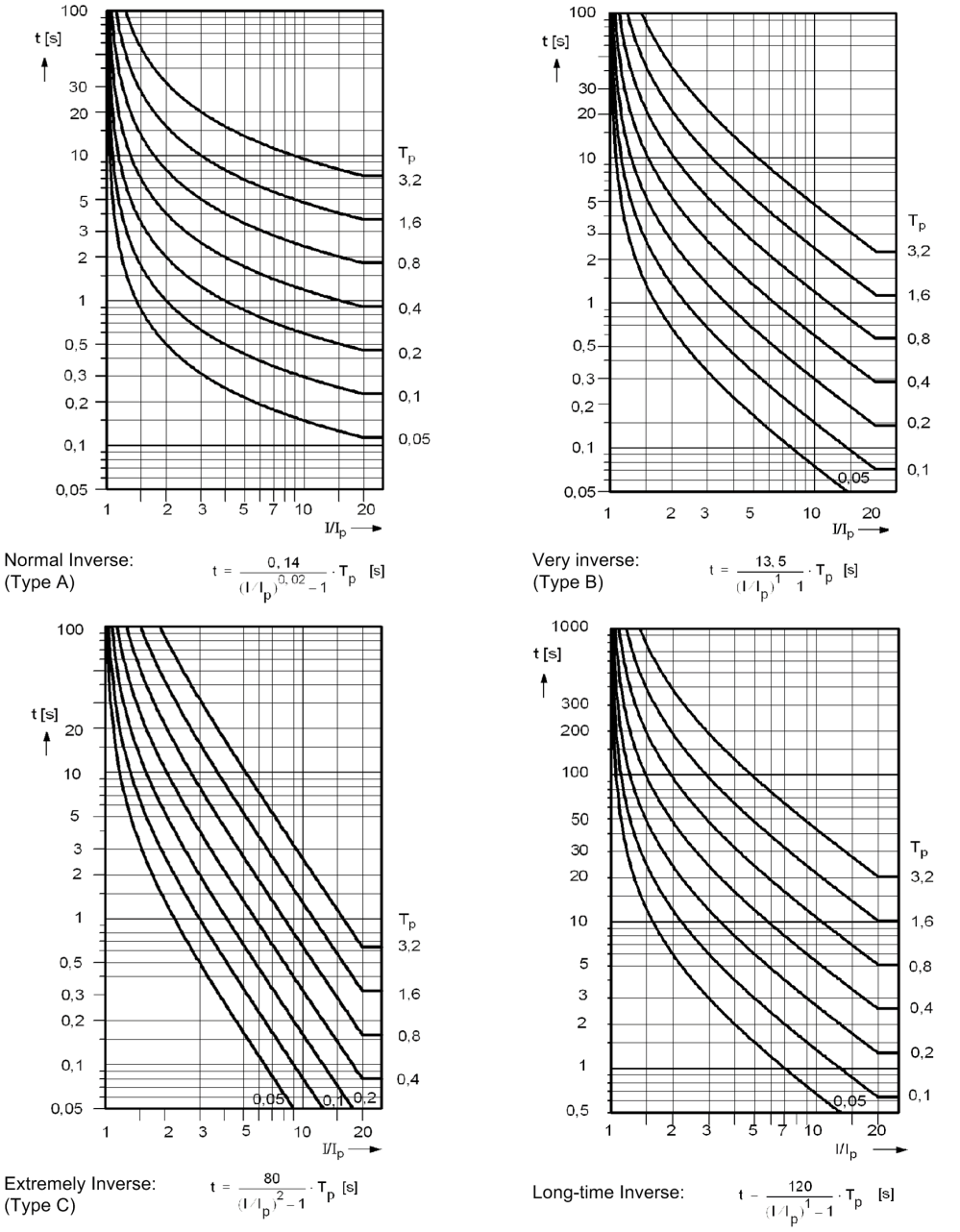

t Trip Time
T_p Setting Value of the time multiplier
I Fault current
I_p Setting value current

Note:
For earth fault read 3I0p instead of Ip
and T3I0p instead of Tp.

[td-kennl-amz-n-iec-oz-060802, 1, en_GB]

Figure 4-1 Trip time characteristics of inverse time overcurrent stage, acc. IEC (phases and earth)

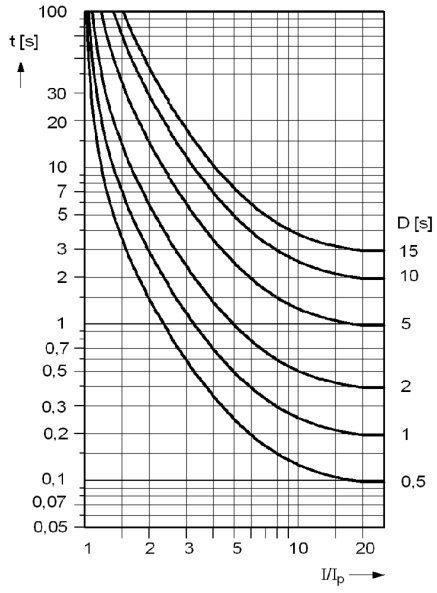

INVERSE $t = \left(\frac{8,9341}{(I/I_p)^{2,0938} - 1} + 0,17966 \right) \cdot D \text{ [s]}$

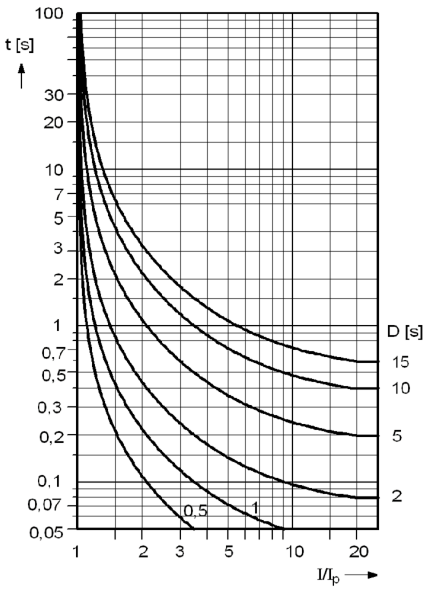

SHORT INVERSE $t = \left(\frac{0,2663}{(I/I_p)^{1,2969} - 1} - 0,03393 \right) \cdot D \text{ [s]}$

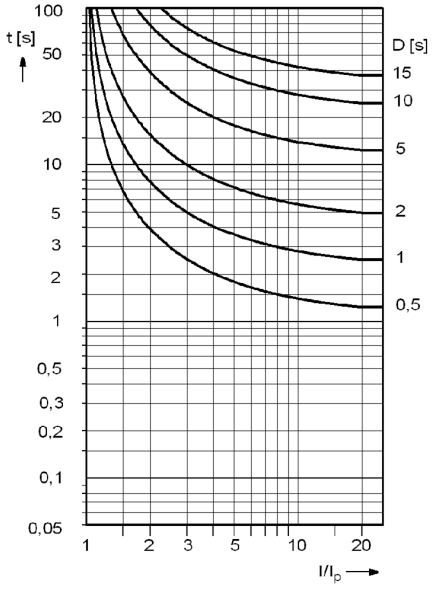

LONG INVERSE $t = \left(\frac{5,6143}{(I/I_p) - 1} + 2,18592 \right) \cdot D \text{ [s]}$

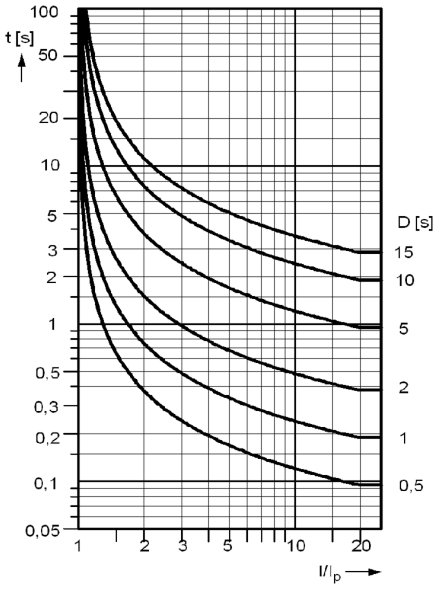

MODERATELY INVERSE $t = \left(\frac{0,0103}{(I/I_p)^{0,02} - 1} + 0,0228 \right) \cdot D \text{ [s]}$

[td-kennl-amz-n-ansi-1-oz-060802, 1, en_GB]

Figure 4-2 Trip time characteristics of inverse time overcurrent stage, acc. ANSI/IEEE (phases and earth)

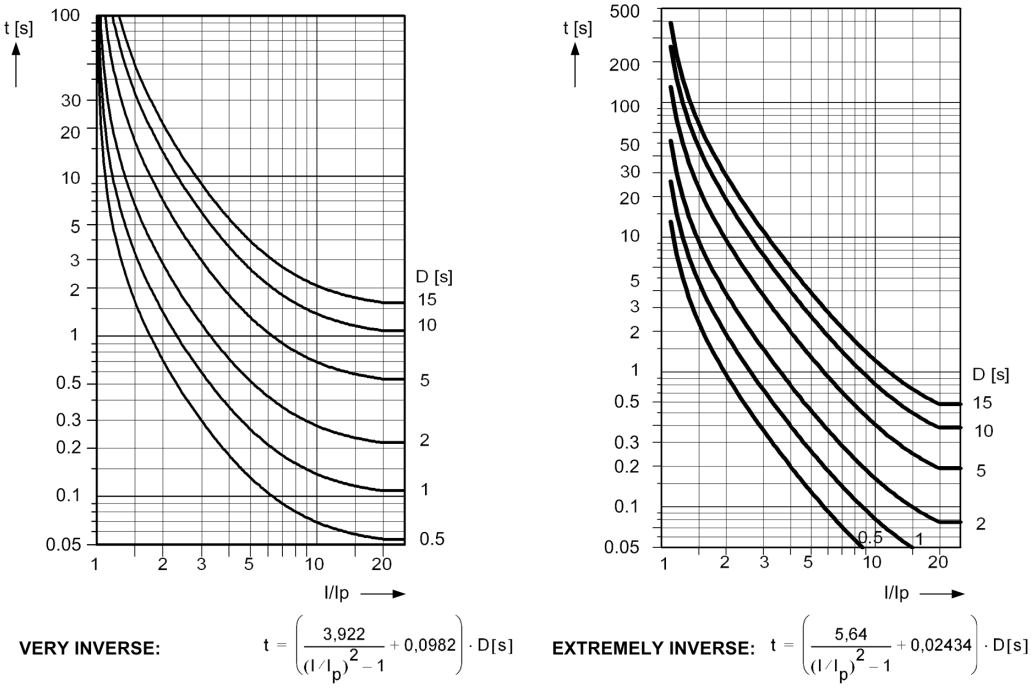

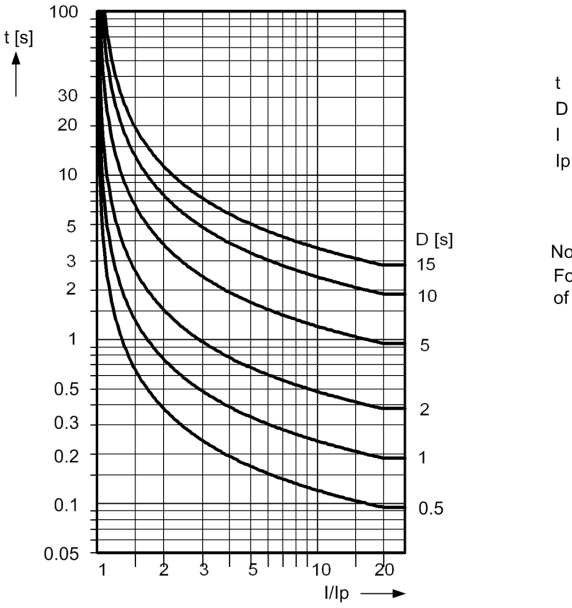

t Trip Time
D Setting value time multiplier
I Fault current
Ip Setting value current

Note:
For earth fault read 3I0p instead of Ip and D3I0p instead of D.

DEFINITE INVERSE: $t = \left(\frac{0{,}4797}{(I/I_p)^{1{,}5625} - 1} + 0{,}21359 \right) \cdot D[s]$

[td-kennl-amz-n-ansi-2-oz-060802, 1, en_GB]

Figure 4-3 Trip time characteristics of inverse time overcurrent stage, acc. ANSI/IEEE (phases and earth)

High-set Current Stages

Pickup value I_{Ph}>> (phases)	for I_N = 1 A	0.10 A to 25.00 A or ∞ (ineffective)	Increments 0.01 A
	for I_N = 5 A	0.50 A to 125.00 A or ∞ (ineffective)	

Pickup value $3I_0$>> (earth)	for I_N = 1 A	0.05 A to 25.00 A or ∞ (ineffective)	Increments 0.01 A
	for I_N = 5 A	0.25 A to 125.00 A or ∞ (ineffective)	
Delay T_{IPh}>> (phases)		0.00 s to 30.00 s or ∞ (ineffective)	Increments 0.01 s
Delay T_{3I0}>> (earth)		0.00 s to 30.00 s or ∞ (ineffective)	Increments 0.01 s
Dropout ratio		Approx. 0.95 for $I/I_N \geq 0.5$	
Pickup times		Approx. 25 ms	
Dropout times		Approx. 30 ms	
Tolerances	Currents	3 % of setting value or 1 % nominal current	
	Times	1 % of setting value or 10 ms	
The set times are pure delay times			

Overcurrent Stages

Pickup value I_{Ph}> (phases) Pickup value I_{Ph}>>>(phases)	for I_N = 1 A	0.10 A to 25.00 A or ∞ (ineffective)	Increments 0.01 A
	for I_N = 5 A	0.50 A to 125.00 A or ∞ (ineffective)	
Pickup value $3I_0$> (earth) Pickup value $3I_0$> (earth)	for I_N = 1 A	0.05 A to 25.00 A or ∞ (ineffective)	Increments 0.01 A
	for I_N = 5 A	0.25 A to 125.00 A or ∞ (ineffective)	
Delay T_{IPh}> (phases)		0.00 s to 30.00 s or ∞ (ineffective)	Increments 0.01 s
Delay T_{3I0}> (earth)		0.00 s to 30.00 s or ∞ (ineffective)	Increments 0.01 s
Dropout ratio		Approx. 0.95 for $I/I_N \geq 0.5$	
Pickup times (fast relays)		Approx. 25 ms	
Dropout times		Approx. 30 ms	
Tolerances	Currents	3 % of setting value or 1 % nominal current	
	Times	1 % of setting value or 10 ms	
The set times are pure delay times			

Inverse Time Stages (IEC)

Pickup value I_{Ph} (phases)	for I_N = 1 A	0.10 A to 4.00 A or ∞ (ineffective)	Increments 0.01 A
	for I_N = 5 A	0.50 A to 20.00 A or ∞ (ineffective)	
Pickup value $3I_{0P}$ (earth)	for I_N = 1 A	0.05 A to 4.00 A or ∞ (ineffective)	Increments 0.01 A
	for I_N = 5 A	0.25 A to 20.00 A or ∞ (ineffective)	
Time multipliers	T_{IP} (phases)	0.05 s to 3.00 s or ∞ (ineffective)	Increments 0.01 s
	T_{3I0P} (earth)	0.05 s to 3.00 s or ∞ (ineffective)	Increments 0.01 s

Additional time delays	$T_{IP\ delayed}$ (phases)	0.00 s to 30.00 s	Increments 0.01 s
	$T_{3I0P\ delayed}$ (earth)	0.00 s to 30.00 s	Increments 0.01 s
Characteristics		see *Figure 4-1*	
Tolerances			
Pickup/dropout thresholds I_p, $3I_{0p}$		3% of set value, or 1% nominal current	
Pickup time for $2 \le I/I_P \le 20$ and $T_{IP} \ge 1$ s Pickup time for $2 \le I/3I_{0P} \le 20$ and $T_{3I0P} \ge 1$ s		5% of set value ± 15 ms 5% of set value ± 15 ms	
Defined times		1 % of setting value or 10 ms	

Inverse Time Stages (ANSI)

Pickup value I_{Ph} (phases)	for I_N = 1 A	0.10 A to 4.00 A or ∞ (ineffective)	Increments 0.01 A
	for I_N = 5 A	0.50 A to 20.00 A or ∞ (ineffective)	
Pickup value $3I_{0P}$ (earth)	for I_N = 1 A	0.05 A to 4.00 A or ∞ (ineffective)	Increments 0.01 A
	for I_N = 5 A	0.25 A to 20.00 A or ∞ (ineffective)	
Time multipliers	D_{IP} (phases)	0.50 s to 15.00 s or ∞ (ineffective)	Increments 0.01 s
	D_{3I0P} (earth)	0.50 s to 15.00 s or ∞ (ineffective)	Increments 0.01 s
Additional time delays	$T_{IP\ delayed}$ (phases)	0.00 s to 30.00 s	Increments 0.01 s
	$T_{3I0P\ delayed}$ (earth)	0.00 s to 30.00 s	Increments 0.01 s
Characteristics		see *Figure 4-2* and *Figure 4-3*	
Tolerances			
Pickup/dropout thresholds I_p, $3I_{0p}$		3% of set value, or 1% nominal current	
Pickup time for $2 \le I/I_P \le 20$ and $D_{IP} \ge 1$ s Pickup time for $2 \le I/3I_{0P} \le 20$ and $D_{3I0P} \ge 1$ s		5% of set value ± 15 ms 5% of set value ± 15 ms	
Defined times		1 % of setting value or 10 ms	

Stub Fault Protection

Pickup value I_{Ph}>>>(phases)	for I_N = 1 A	0.10 A to 25.00 A or ∞ (ineffective)	Increments 0.01 A
	for I_N = 5 A	0.50 A to 125.00 A or ∞ (ineffective)	
Pickup value $3I_0$ >>>(earth)	for I_N = 1 A	0.05 A to 25.00 A or ∞ (ineffective)	Increments 0.01 A
	for I_N = 5 A	0.25 A to 125.00 A or ∞ (ineffective)	
Delays	T_{IPh}>>>	0.00 s to 30.00 s or ∞ (ineffective)	Increments 0.01 s
	T_{3I0}>>>	0.00 s to 30.00 s or ∞ (ineffective)	Increments 0.01 s
Dropout to pickup ratio		Approx. 0.95 for $I/I_N \ge 0.5$	
Pickup times (fast relays)		Approx. 25 ms	

Dropout times		Approx. 30 ms
Tolerance currents	Currents	3 % of setting value or 1 % nominal current
	Times	1 % of setting value or 10 ms
The set times are pure delay times.		

4.4 Synchronism and voltage check (optional)

Operating Modes

Operating modes with automatic reclosure	Synchronism check	
	Live bus - dead line	
	Dead bus - live line	
	Dead bus and dead line	
	Bypassing	
	Or combination of the above	
Synchronism	Closing the circuit breaker under asynchronous power conditions possible (with circuit breaker action time)	
Operating modes for manual closure	As for automatic reclosure, independently selectable	

Voltages

Maximum operating voltage	20 V to 140 V (phase-to-phase)	Increments 1 V
U< for dead status	1 V to 60 V (phase-to-phase)	Increments 1 V
U> for voltage present	20 V to 125 V (phase-to-phase)	Increments 1 V
Tolerances	2 % of the pickup value or 1 V	
Dropout to pickup ratio	approx. 0.9 (U>) or 1.1 (U<)	

ΔU measurement

Voltage difference	1.0 V to 60.0 V (phase-to-phase)	Increments 0,1 V
Tolerance	1 V	
Dropout to pickup ratio	Approx. 1,05	

Synchronous power conditions

Δφ measurement	2° to 80°	Increments 1°
Tolerance	2°	
Δf measurement	0.03 Hz to 2.00 Hz	Increments 0,01 Hz
Tolerance	15 mHz	
Enable delay	0,00 s to 30,00 s	Increments 0.01 s

Asynchronous power conditions

Δf measurement	0.03 Hz to 2.00 Hz	Increments 0,01 Hz
Tolerance	15 mHz	
Max. angle error	5° for $\Delta f \leq 1$ Hz	
	10° for $\Delta f > 1$ Hz	
Synchronous/asynchronous limits	0,01 Hz	
Circuit breaker operating time	0,01 s to 0,60 s	Increments 0.01 s

Times

Minimum time for filtering the measured values	Approx. 80 ms	
Maximum measuring time	0.01 s to 600.00 s; ∞	Increments 0.01 s
Tolerance of all timers	1 % of setting value or 10 ms	

4.5 Under and over-voltage protection (optional)

Phase-to-earth overvoltage

Over voltage U_{Ph}>>		1.0 V to 170.0 V; ∞	Increments 0,1 V
Delay $T_{UPh>>}$		0.00 s to 100.00 s; ∞	Increments 0.01 s
OvervoltageU_{Ph}>		1.0 V to 170.0 V; ∞	Increments 0,1 V
Delay $T_{UPh>}$		0.00 s to 100.00 s; ∞	Increments 0.01 s
Dropout to pickup ratio		0.30 to 0.99	Increments 0.01
Pickup time			
Dropout time		approx. 30 ms	
Tolerances	Voltages	3 % of set value or 1 V	
	Times	1 % of setting value or 10 ms	

Phase-to-phase overvoltages

OvervoltageU_{PhPh}>>		2.0 V to 220.0 V; ∞	Increments 0,1 V
Delay $T_{UPhPh>>}$		0.00 s to 100.00 s; ∞	Increments 0.01 s
OvervoltageU_{PhPh}>		2.0 V to 220.0 V; ∞	Increments 0,1 V
Delay $T_{UPhPh>}$		0.00 s to 100.00 s; ∞	Increments 0.01 s
Dropout to pickup ratio		0.30 to 0.99	Increments 0.01
Pickup time			
Dropout time		approx. 30 ms	
Tolerances	Voltages	3 % of set value or 1 V	
	Times	1 % of setting value or 10 ms	

Overvoltage positive sequence system U_1

OvervoltageU_1>>		2.0 V to 220.0 V; ∞	Increments 0.1 V
Delay $T_{U1>>}$		0.00 s to 100.00 s; ∞	Increments 0.01 s
Overvoltage U_1>		2.0 V to 220.0 V; ∞	Increments 0.1 V
Delay $T_{U1>}$		0.00 s to 100.00 s; ∞	Increments 0.01 s
Dropout ratio		0.30 to 0.99	Increments 0.01
Pick-up times		Approx. 35 ms (50 Hz)/Approx. 30 ms (60 Hz)	
Dropout time		Approx. 30 ms	
Tolerances	Voltages	3 % of setting value or 1 V	
	Times	1 % of setting value or 10 ms	

Overvoltage negative sequence system U_2

OvervoltageU_2>>	2.0 V to 220.0 V; ∞	Increments 0,1 V
Delay $T_{U2>>}$	0.00 s to 100.00 s; ∞	Increments 0.01 s
OvervoltageU_2>	2.0 V to 220.0 V; ∞	Increments 0,1 V
Delay $T_{U2>}$	0.00 s to 100.00 s; ∞	Increments 0.01 s
Dropout to pickup ratio	0,30 to 0,99	Increments 0.01
Pickup time		
Dropout time	Approx. 30 ms	

Tolerances	Voltages	3 % of set value or 1 V
	Times	1 % of setting value or 10 ms

Overvoltage zero-sequence system $3U_0$ or any single-phase voltage U_X

Overvoltage $3U_0$>>		1.0 V to 220.0 V; ∞	Increments 0,1 V
Delay $T_{3U0>>}$		0.00 s to 100.00 s; ∞	Increments 0.01 s
Overvoltage $3U_0$>		1.0 V to 220.0 V; ∞	Increments 0,1 V
Delay $T_{3U0>}$		0.00 s to 100.00 s; ∞	Increments 0.01 s
Dropout to pickup ratio		0.30 to 0,.9	Increments 0.01
Pickup time			
With repeated measurement			
Without repeated measurement			
Dropout time			
With repeated measurement		approx. 75 ms (50 Hz)	
Without repeated measurement		approx. 30 ms (50 Hz)	
Tolerances	Voltages	3 % of set value or 1 V	
	Times	1 % of setting value or 10 ms	

Phase-to-earth undervoltage

Under voltage U_{Ph}<<		1.0 V to 100.0 V	Increments 0,1 V
Delay $T_{UPh<<}$		0.00 s to 100.00 s; ∞	Increments 0.01 s
Under voltage U_{Ph}<		1.0 V to 100.0 V	Increments 0,1 V
Delay $T_{UPh<}$		0.00 s to 100.00 s; ∞	Increments 0.01 s
Dropout to pickup ratio		1.01 to 1.20	Increments 0.01
Current criterion		Can be switched on/off	
Pickup time			
Dropout time		Approx. 30 ms	
Tolerances	Voltages	3 % of set value or 1 V	
	Times	1 % of setting value or 10 ms	

Undervoltages phase-to-phase

UndervoltageU_{PhPh}<<		1.0 V to 175.0 V	Increments 0,1 V
Delay $T_{UPhPh<<}$		0.00 s to 100.00 s; ∞	Increments 0.01 s
UndervoltageU_{PhPh}<		1.0 V to 175.0 V	Increments 0,1 V
Delay $T_{UPhPh<}$		0.00 s to 100.00 s; ∞	Increments 0.01 s
Dropout to pickup ratio		1.01 to 1.20	Increments 0.01
Current criterion		Can be switched on/off	
Pickup time			
Dropout time		Approx. 30 ms	
Tolerances	Voltages	3 % of set value or 1 V	
	Times	1 % of setting value or 10 ms	

Undervoltage positive sequence system U_1

UndervoltageU_1<<	1.0 V to 100.0 V	Increments 0,1 V
Delay $T_{U1<<}$	0.00 s to 100.00 s; ∞	Increments 0.01 s

Under voltage $U_1<$		1.0 V to 100.0 V	Increments 0,1 V
Delay $T_{U1<}$		0.00 s to 100.00 s; ∞	Increments 0.01 s
Dropout to pickup ratio		1.01 to 1.20	Increments 0.01
Current criterion		Can be switched on/off	
Pickup time			
Dropout time		Approx. 30 ms	
Tolerances	Voltages	3 % of set value or 1 V	
	Times	1 % of setting value or 10 ms	

4.6 Circuit breaker failure protection (optional)

Circuit breaker monitoring

Current flow monitoring	for I_N = 1 A	0.05 A to 20.00 A	Increments 0.01 A
	for I_N = 5 A	0.25 A to 100.00 A	
Zero sequence current monitoring	for I_N = 1 A	0.05 A to 20.00 A	Increments 0.01 A
	for I_N = 5 A	0.25 A to 100.00 A	
Dropout to pickup ratio		Approx. 0.95	
Tolerance		5 % of set value or 1 % of nominal current	
Monitoring of circuit breaker auxiliary contact position			
for 3-pole tripping		binary input for CB auxiliary contact	
for 1-pole tripping		1 binary input for auxiliary contact per pole or 1 binary input for series connection NO contact and NC contact	
Note:: The circuit breaker failure protection can also operate without the indicated circuit breaker auxiliary contacts, but the function range is then reduced. Auxiliary contacts are necessary for the circuit breaker failure protection for tripping without or with a very low current flow (e.g. Buchholz protection) and for stub fault protection and circuit breaker pole discrepancy supervision.			

Initiation conditions

For circuit breaker failure protection	Internal or external 1-pole trip [1)] Internal or external 3-pole trip [1)] Internal or external 3-pole trip without current[1)]

[1)] Via binary inputs

Times

Pickup time	Approx. 5 ms with measured quantities present, Approx. 20 ms after switch-on of measured quantities	
Dropout time, internal (overshoot time)	≤ 15 ms at sinusoidal measured values, ≤ 25 ms maximum	
Delay times for all stages	0.00 s to 30.00 s; ∞	Increments 0.01 s
Tolerance	1 % of setting value or 10 ms	

End fault protection

With signal transmission to the opposite line end		
Time delay	0.00 s to 30.00 s; ∞	Increments 0.01 s
Tolerance	1 % of setting value or 10 ms	

Pole discrepancy supervision

Initiation criterion	Not all poles are closed or open	
Monitoring time	0.00 s to 30.00 s; ∞	Increments 0.01 s
Tolerance	1 % of setting value or 10 ms	

4.7 Monitoring Functions

Measured values

Current sum		$I_F = \lvert \underline{I}_{L1} + \underline{I}_{L2} + \underline{I}_{L3} + k_I \cdot \underline{I}_E \rvert >$ SUM.I Threshold $\cdot I_N$ + SUM.FACTORI $\cdot \Sigma \lvert I \rvert$	
- SUM.ILimit	for I_N = 1 A	0.05 A to 2.00 A	Increments 0.01 A
	for I_N = 5 A	0.25 A to 10.00 A	Increments 0.01 A
- SUM.FACTORI		0.00 to 0.95	Increments 0.01
Voltage sum		$U_F = \lvert \underline{U}_{L1} + \underline{U}_{L2} + \underline{U}_{L3} + k_U \cdot \underline{U}_{EN} \rvert > 25$ V	
Current Symmetry		$\lvert I_{min} \rvert / \lvert I_{max} \rvert <$ BAL.FACTOR.I as long as $I_{max}/I_N >$ BAL.ILIMIT/I_N	
- BAL.FACTOR.I		0.10 to 0.95	Increments 0.01
BAL.ILIMIT	for I_N = 1 A	0.10 A to 1.00 A	Increments 0.01 A
	for I_N = 5 A	0.50 A to 5.00 A	Increments 0.01 A
T BAL.ILIMIT		5 s to 100 s	Increments 1 s
Broken conductor		One conductor without current, the others with current (monitoring of current transformer circuits on current step change in one phase without residual current)	
Voltage Symmetry		$\lvert U_{min} \rvert / \lvert U_{max} \rvert <$ BAL.FACTOR.U as long as $\lvert U_{max} \rvert >$ BAL.ULIMIT	
- BAL.FACTORU		0.58 to 0.95	Increments 0.01
- BAL.ULIMIT		10 V to 100 V	Increments 1 V
- T BAL.ULIMIT		5 s to 100 s	Increments 1 s
Voltage phase sequence		$\underline{U}_{L1}$ before $\underline{U}_{L2}$ before $\underline{U}_{L3}$ as long as $\lvert \underline{U}_{L1} \rvert . \lvert \underline{U}_{L2} \rvert . \lvert \underline{U}_{L3} \rvert > 40$ V/$\sqrt{3}$	
Non-symmetrical voltages (Fuse failure monitoring)		$3 \cdot U_0 >$ FFM U> or $3 \cdot U_2 >$ FFM U> and at the same time $3 \cdot I_0 <$ FFM I< and $3 \cdot I_2 <$ FFM I<	
- FFM U>		10 V to 100 V	Increments 1 V
- FFM I<	for I_N = 1 A	0.10 A to 1.00 A	Increments 0.01 A
	for I_N = 5 A	0.50 A to 5.00 A	Increments 0.01 A
Three-phase measuring voltage failure (Fuse failure monitoring)		all U_{Ph-E} < FFM UMEAS < and at the same time all ΔI_{Ph} < FFM I_{delta} and all $I_{Ph} > (I_{Ph}>$ (Dist.))	
- FFM UMEAS <		2 V to 100 V	Increments 1 V
- FFM I_{delta}	for I_N = 1 A	0.05 A to 1.00 A	Increments 0.01 A
	for I_N = 5 A	0.25 A to 5.00 A	Increments 0.01 A
- T U SUPERVISION (wait time for additional measured voltage failure monitoring)		0.00 s to 30.00 s	Increments 0.01 s
- T U mcb		0 ms to 30 ms	Increments 1 ms
Phase angle positive sequence power		Message when the angle lies inside the area of the P-Q level parameterised by φA and φB	
- φA, φB		0° to 259°	Increments 1°

- I1	for I_N = 1 A	0.05 A to 2.00 A	Increments 0.01 A
	for I_N = 5 A	0.25 A to 10.00 A	Increments 0.01 A
- U1		2 V to 70 V	Increments 1 V
Response Time		Approx. 30 ms	

Trip Circuit Supervision

Number of monitored circuits	1 to 3	
Operation per circuit	With 1 binary input or with 2 binary inputs	
Pickup and Dropout Time	Approx. 1 s to 2 s	
Settable delay time for operation with 1 binary input	1 s to 30 s	Increments 1 s

4.8 User-defined Functions (CFC)

Function Blocks and their Possible Allocation to the Priority Classes

Function Module	Comments	Task Level			
		MW_BEARB	PLC1_BEARB	PLC_BEARB	SFS_BEARB
ABSVALUE	Magnitude Calculation	X	–	–	–
ADD	Addition	X	X	X	X
ALARM	Alarm clock	X	X	X	X
AND	AND - Gate	X	X	X	X
BLINK	Flash block	X	X	X	X
BOOL_TO_CO	Boolean to Control (conversion)	–	X	X	–
BOOL_TO_DI	Boolean to Double Point (conversion)	–	X	X	X
BOOL_TO_IC	Bool to Internal SI, Conversion	–	X	X	X
BUILD_DI	Create Double Point Annuncia-tion	–	X	X	X
CMD_CANCEL	Cancel command	X	X	X	X
CMD_CHAIN	Switching Sequence	–	X	X	–
CMD_INF	Command Information	–	–	–	X
COMPARE	Measured value comparison	X	X	X	X
CONNECT	Connection	–	X	X	X
COUNTER	Counter	X	X	X	X
CV_GET_STATUS	Information status of the metered value, decoder	X	X	X	X
D_FF	D- Flipflop	–	X	X	X
D_FF_MEMO	Status Memory for Restart	X	X	X	X
DI_GET_STATUS	Information status double point indication, decoder	X	X	X	X
DI_SET_STATUS	Double point indication with status, encoder	X	X	X	X
DI_TO_BOOL	Double Point to Boolean (conversion)	–	X	X	X
DINT_TO_REAL	DoubleInt after real, adapter	X	X	X	X
DIST_DECODE	Double point indication with status, decoder	X	X	X	X
DIV	Division	X	X	X	X
DM_DECODE	Decode Double Point	X	X	X	X
DYN_OR	Dynamic OR	X	X	X	X
LIVE_ZERO	Live zero monitoring, nonlinear characteristic	X	–	–	–
LONG_TIMER	Timer (max.1193h)	X	X	X	X
LOOP	Feedback Loop	X	X	X	X
LOWER_SETPOINT	Lower Limit	X	–	–	–
MUL	Multiplication	X	X	X	X
MV_GET_STATUS	Information status measured value, decoder	X	X	X	X
MV_SET_STATUS	Measured value with status, encoder	X	X	X	X
NAND	NAND - Gate	X	X	X	X

NEG	Negator	X	X	X	X
NOR	NOR - Gate	X	X	X	X
OR	OR - Gate	X	X	X	X
REAL_TO_DINT	Real after DoubleInt, adapter	X	X	X	X
REAL_TO_UINT	Real after U-Int, adapter	X	X	X	X
RISE_DETECT	Rising edge detector	X	X	X	X
RS_FF	RS- Flipflop	–	X	X	X
RS_FF_MEMO	Status memory for restart	X	X	X	X
SI_GET_STATUS	Information status single point indication, decoder	X	X	X	X
SI_SET_STATUS	Single point indication with status, encoder	X	X	X	X
SQUARE_ROOT	Root Extractor	X	X	X	X
SR_FF	SR- Flipflop	–	X	X	X
SR_FF_MEMO	Status memory for restart	X	X	X	X
ST_AND	AND gate with status	X	X	X	X
ST_NOT	Negator with status	X	X	X	X
ST_OR	OR gate with status	X	X	X	X
SUB	Substraction	X	X	X	X
TIMER	Timer	–	X	X	–
TIMER_SHORT	Simple timer	–	X	X	–
UINT_TO_REAL	U-Int to real, adapter	X	X	X	X
UPPER_SETPOINT	Upper Limit	X	–	–	–
X_OR	XOR - Gate	X	X	X	X
ZERO_POINT	Zero Supression	X	–	–	–

General limits

Description	Limit	Comments
Maximum number of all CFC charts considering all task levels	32	When the limit is exceeded, an error indication is output by the device. Consequently, the device starts monitoring. The red ERROR-LED lights up.
Maximum number of all CFC charts considering one task level	16	Only error message (Evolving error in processing procedure)
Maximum number of all CFC inputs considering all charts	400	When the limit is exceeded, an error indication is output by the device. Consequently, the device starts monitoring. The red ERROR-LED lights up.
Maximum number of inputs of one chart for each task level (number of unequal information items of the left border per task level)	400	Only error message; here the number of elements of the left border per task level is counted. Since the same information is indicated at the border several times, only unequal information is to be counted.
Maximum number of reset-resistant flipflops D_FF_MEMO, RS_FF_MEMO, SR_FF_MEMO	350	When the limit is exceeded, an error indication is output by the device. Consequently, the device starts monitoring. The red ERROR-LED lights up.

Device-specific Limits

Description	Limit	Comments
Maximum number of concurrent changes to planned inputs per task level Chart inputs per task level	50	When the limit is exceeded, an error indication is output by the device. Consequently, the device starts monitoring. The red ERROR-LED lights up.
Maximum number of chart outputs per task level	150	

Additional Limits

Additional limits [1] for the following 4 CFC blocks:				
Task Level				
	TIMER [2] [3]	TIMER_SHORT [2] [3]	CMD_CHAIN	D_FF_MEMO
MW_BEARB				
PLC1_BEARB	15	30	20	350
PLC_BEARB				
SFS_BEARB				

[1] When the limit is exceeded, an error indication is output by the device. Consequently, the device starts monitoring. The red ERROR-LED lights up.

[2] TIMER and TIMER_SHORT share the available timer resources. The relation is TIMER = 2 · system timer and TIMER_SHORT = 1 · system timer. For the maximum used timer number the following side conditions are valid: (2 · number of TIMERs + number of TIMER_SHORTs) < 20. The LONG_TIMER is not subject to this condition.

[3] The time values for the blocks TIMER and TIMER_SHORT must not be smaller than the time resolution of the device, i.e. 5 ms, otherwise the blocks will not start with the starting impulse issued.

Maximum Number of TICKS in the Task Levels

Task Level	Limit in TICKS [1]
MW_BEARB (Measured Value Processing)	10 000
PLC1_BEARB (Slow PLC Processing)	1 900
PLC_BEARB (Fast PLC Processing)	200
SFS_BEARB (switchgear interlocking)	10 000

[1] When the sum of TICKS of all blocks exceeds the limits before-mentioned, an error message is output by CFC.

Processing Times in TICKS required by the Individual Elements

Individual Element		Number of TICKS
Block, basic requirement		5
Each input more than 3 inputs for generic modules		1
Connection to an input signal		6
Connection to an output signal		7
Additional for each chart		1
Operating sequence module	CMD_CHAIN	34
Flipflop	D_FF_MEMO	6
Loop module	LOOP	8
Decoder	DM_DECODE	8
Dynamic OR	DYN_OR	6
Addition	ADD	26
Subtraction	SUB	26
Multiplication	MUL	26

Individual Element		Number of TICKS
Division	DIV	54
Square root	SQUARE_ROOT	83
Timer	TIMER_SHORT	8
Timer	LONG_TIMER	11
Blinker lamp	BLINK	11
Counter	COUNTER	6
Adaptor	REAL_TO_DINT	10
Adaptor	REAL_TO_UINT	10
Alarm clock	ALARM	21
Comparison	COMPARE	12
Decoder	DIST_DECODE	8

4.9 Auxiliary Functions

Measured values

Operational measured values for currents	I_{L1}; I_{L2}; I_{L3}; $3I_0$; I_1; I_2; I_Y; $I_{P;}$ $I_{EE;}$ in A primary and secondary and in % $I_{Nperation}$
Tolerance	0.5 % of measured value or 0.5 % o I_N
Operational measured values for voltages	U_{L1-E}, U_{L2-E}, U_{L3-E}; $3U_0$, U_0, U_1, U_2, U_{1Ko}, U_{sy2} (phase-to-earth connection) in kV primary, in V secondary or in % of $U_{NOperation}/\sqrt{3}$
Tolerance	0.5 % of measured value, or 0.5 % of U_N
Operational measured values for voltages	U_x, U_{en} in V secondary
Tolerance	0.5 % of measured value, or 0.5 % of U_N
Operational measured values for voltages	U_{L1-L2}, U_{L2-L3}, U_{L3-L1}, U_{sy2} (LL-Anschluss) in kV primary, in V secondary or in % of $U_{NBetrieb}$
Tolerance	0.5 % of measured value or 0.5 % of U_N
Operational measured values for power	S; P; Q (apparent, active and reactive power) in MVA; MW; Mvar primary and $\%_N$ (operational nominal power) = $\sqrt{3} \cdot U_N \cdot I_N$
Tolerance	1 % of S_N atI/I_N and U/U_N in range 50 to 120 %
	1 % of P_N at I/I_N and U/U_N in range 50 to 120 % and ABS(cos ϕ) in range 0.7 to 1
	1 % of Q_N at I/I_N and U/U_N in range 50 to 120 % and ABS(cos ϕ) in range 0.7 to 1
Operating measured value for power factor	cos φ
Tolerance	0.02
Counter values for energy	W_p+, W_q+; W_p-; W_q- (real and reactive energy) in kWh (MWh or GWh) or in kVARh (MVARh or GVARh)
Tolerance [1)]	5 % for $I > 0{,}5\ I_N$, $U > 0{,}5\ U_N$ and $\lvert \cos\varphi \rvert \geq 0{,}707$
Operating measured values for frequency	f in Hz and $\%\ f_N$
Range	94 % to 106 % of f_N
	10 mHz or 0.02 % of f_N
Operational measured values for synchro check	U_{sy1}; U_{sy2}; U_{diff} in kV primär f_{sy1}; f_{sy2}; f_{diff} in Hz; φ_{diff} in °
[1)] at Nominal Frequency	

Operational Indication Buffer

Capacity	200 records

Fault Logging

Capacity	8 faults with a total of max. 600 messages and up to 100 binary signal traces (marks)

Fault Recording

Number of stored fault records	Max. 8
Storage time	Max. 5 s for each fault Approx. 15 s in total
Sampling rate at f_N = 50 Hz	1 ms
Sampling rate at f_N = 60 Hz	0,83 ms

Switching Statistics

Number of trip events caused by the device	Separately for each breaker pole (if single-pole tripping is possible)
Number of automatic reclosures initiated by the device	Separate for 1-pole and 3-pole AR; Separately for 1st AR cycle and for all further cyles
Total of interrupted currents	Pole segregated
Maximum interrupted current	Pole segregated

Real Time Clock and Buffer Battery

Resolution for operational messages	1 ms
Resolution for fault messages	1 ms
Buffer battery	Type: 3 V/1 Ah, Type CR 1/2 AA Self-discharging time approx. 10 years

IEC 61850 GOOSE (inter-device communication)

The GOOSE communication service of IEC 61850 is qualified for switchgear interlocking. The runtime of GOOSE messages with the protection relay picked up depends on the number of connected IEC 61850 clients. For the devices applications with protective functions have to be checked in terms of their required runtime. In each case, the manufacturer has to be consulted to define the requirements that ensure that the application functions safely.

4.10 Dimensions

4.10.1 Panel Flush Mounting or Cubicle Mounting (housing size $^1/_3$)

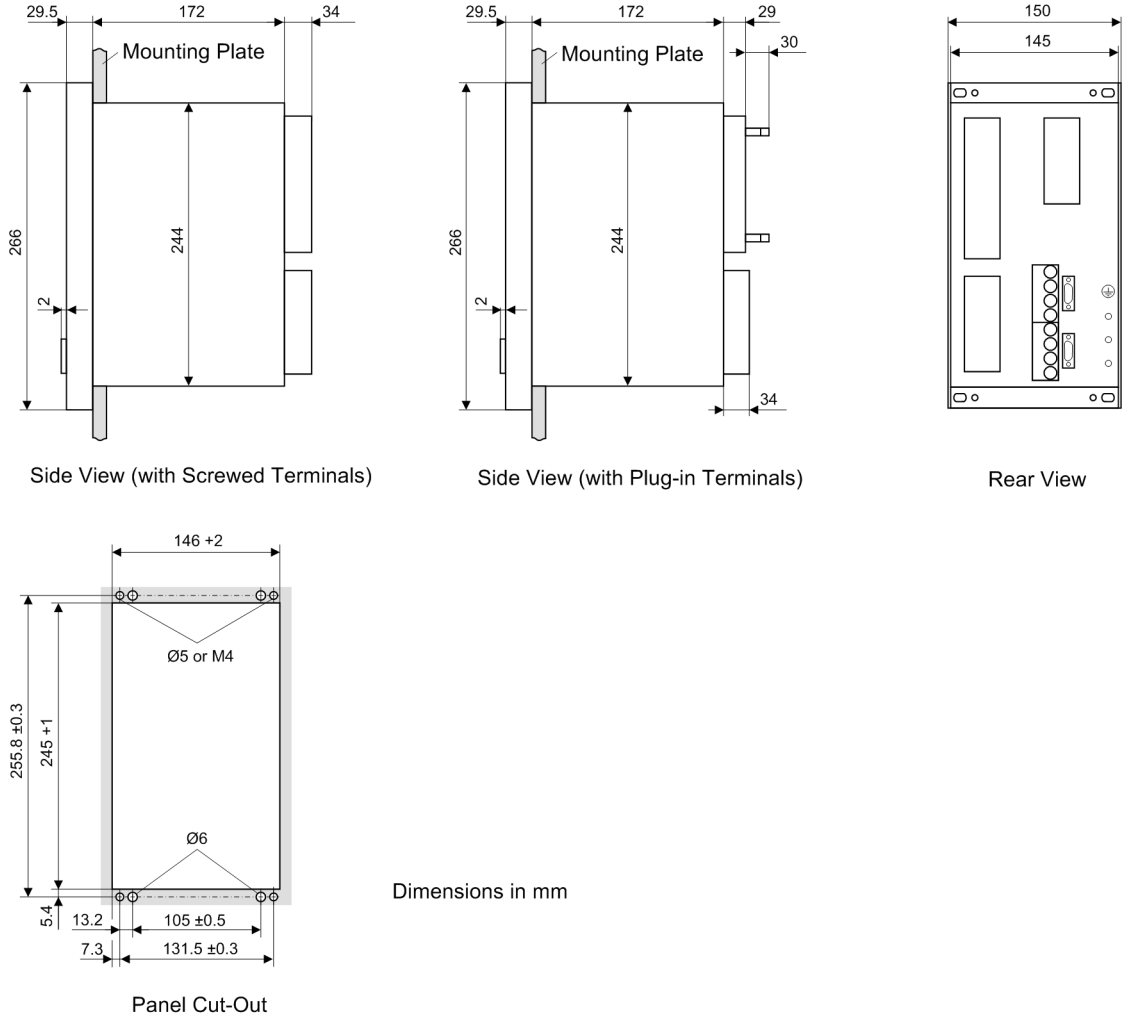

[massbild-schrankeinbau-gr-1-3-oz-050802, 1, en_GB]

Figure 4-4 Dimensional drawing of a 7VK610 for panel flush or cubicle mounting (housing size $^1/_3$)

4.10.2 Panel Flush Mounting or Cubicle Mounting (housing size $^1/_2$)

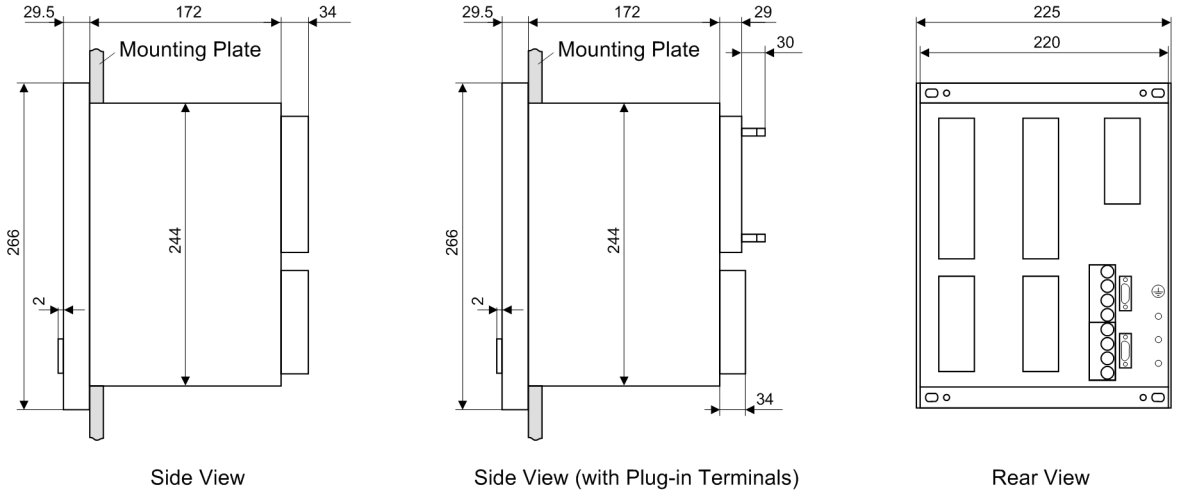

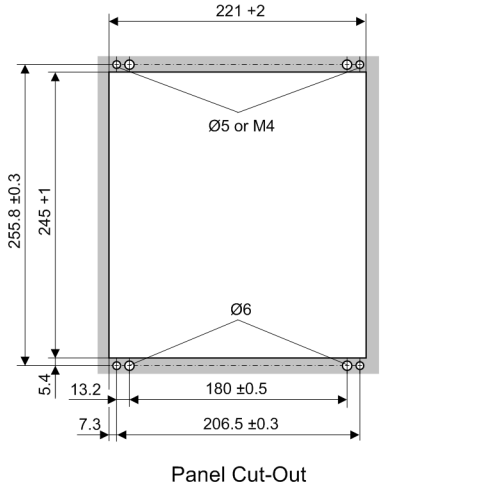

Dimensions in mm

[massbild-schrankeinbau-gr-1-2-oz-050802, 1, en_GB]

Figure 4-5 Dimensional drawing of a 7VK611 for panel flush or cubicle mounting (housing size $^1/_2$)

4.10.3 Panel surface mounting (housing size $^1/_3$)

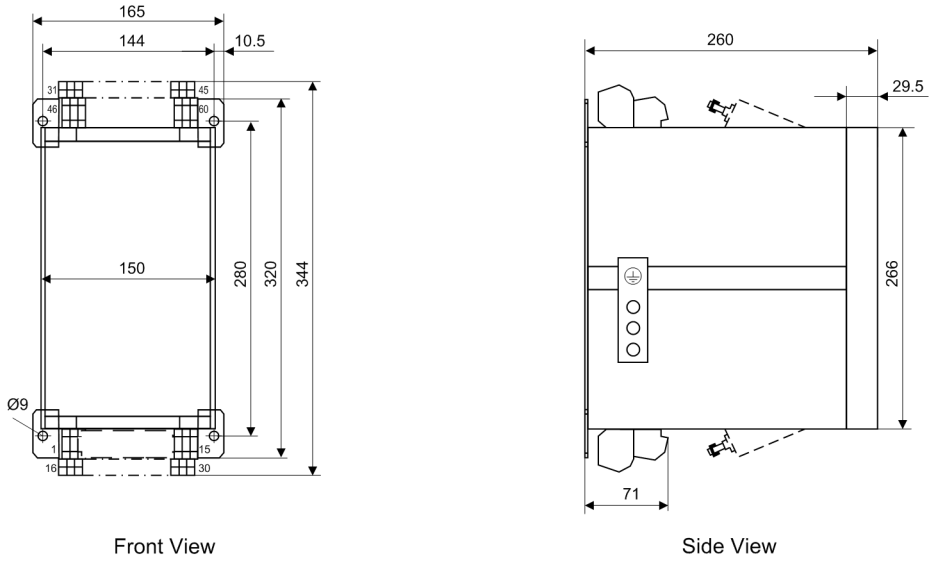

[massbild-schalttafelaufbau-gr-1-3-oz-050802, 1, en_GB]

Figure 4-6 Dimensional drawing of a 7VK610 for panel surface mounting (housing size $^1/_3$)

4.10.4 Panel surface mounting (housing size $^1/_2$)

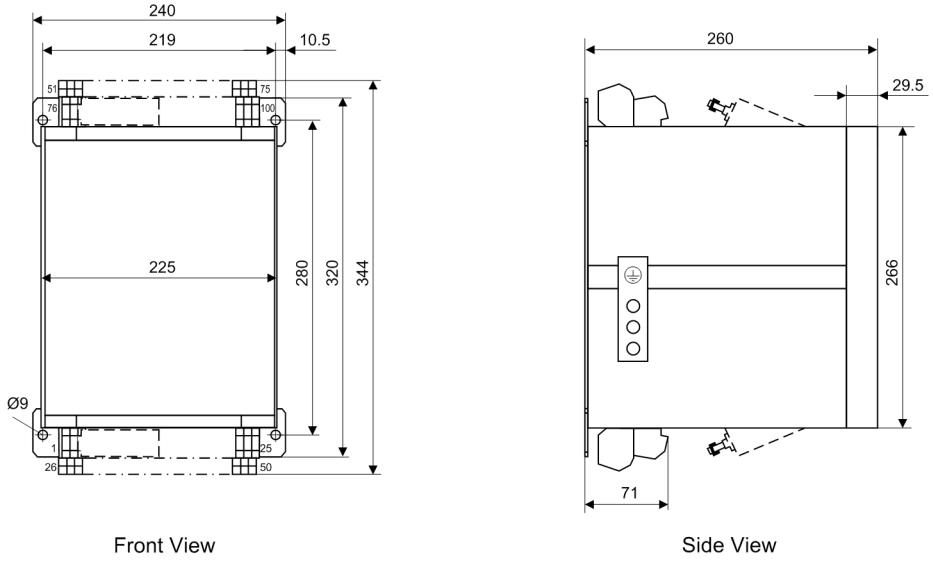

[massbild-schalttafelaufbau-gr-1-2-oz-050802, 1, en_GB]

Figure 4-7 Dimensional drawing of a 7VK611 for panel surface mounting (housing size $^1/_2$)

A Ordering Information and Accessories

A.1	Ordering information MLFB ordering code	260
A.2	Accessories	262

A.1 Ordering information MLFB ordering code

						6	7		8	9	10	11	12		13	14	15	16		Supplement		
Breaker Management Device	**7**	**V**	**C**	**6**	**1**			**–**						**–**	**4**	**Y**		**0**	+			

Device Type/Number of Binary Inputs and Outputs	**Pos. 6**
Housing size $^1/_3$ x 19", 7 BI, 5 BO, 1 Live status contact	0
Housing size $^1/_2$ x 19", 20 BI, 18 BO, 1 Live status contact	1

Measuring input (4 x U, 4 x I)	**Pos. 7**
I_{ph} = 1 A, I_e = 1 A (min. = 0.05 A)	1
I_{ph} = 5 A, I_e = 5 A (min. = 0.25 A)	5

Auxiliary Voltage (Power Supply, Pickup Threshold of Binary Inputs)	**Pos. 8**
DC 24 to 48 V, Binary Input Threshold 19 V [2)]	2
DC 60 to 125 V [1)], Binary Input Threshold 19 V [2)]	4
DC 110 to 250 V [1)], AC 115 V to 230 V, Binary Input Threshold 88 V [2)]	5
DC 220 to 250 V [1)], AC 115 V to 230 V, Binary Input Threshold 176 V [2)]	6

Case	**Pos. 9**
In housing with screw terminals	A
Surface-mounted housing with screw terminals	E

[1)] with plug-in jumper one of the 2 voltage ranges can be selected

[2)] for each binary input the pickup threshold ranges are interchangeable via plug-in jumpers

Region-Specific Default/Language Settings and Function Versions	**Pos. 10**
Region GE, 50 Hz, German language (language can be changed)	A
Region World, 50/60 Hz, English language (language can be changed)	B
Region US, 60 Hz, American English language (language can be changed)	C
Region FR, 50/60 Hz, French language (language can be changed)	D
Region World, 50/60 Hz, Spanish language (language can be changed)	E
Region World, 50/60 Hz, Italian language (language can be changed)	F

System interfaces (Port B)	**Pos. 11**
not equipped	0
System port, IEC 60870-5-103 protocol, electrical RS232	1
System port, IEC 60870-5-103 protocol, electrical RS485	2
System port, IEC 60870-5-103 protocol, optical 820 nm, ST-connector	3
System port, Profibus FMS slave, electrical RS485	4
System port, Profibus FMS slave, optical, twin ring, ST-connector	6 [1)]
For further protocols, see the following additional information.	9

Additional information for further protocols (port B)	**Supplement**
System port, Profibus DP slave, electrical RS485	+ L 0 A
System port, Profibus DP slave, optical 820 nm, twin ring, ST-connector	+L 0 B [1)]
System port, DNP3.0, electrical RS485	+ L 0 G
System port, DNP3.0, optical 820 nm, ST-connector	+L 0 H [2)]
IEC 61850, electric with EN100, double, RJ45-connector	+L 0 R

Additional information for further protocols (port B)	**Supplement**
IEC 61850, optical with EN100, double, Duplex-LC connection	+L 0 S [2]

[1] Cannot be ordered for the surface-mounted housing; if optical port is required, please order the version with RS485 interface and a separate optical converter.

[2] Cannot be delivered if 9th digit = E

Service Interface (Port C)	**Pos. 12**
DIGSI/Modem, electrical RS232	1
DIGSI/Modem, electrical RS485	2

Functions			Pos. 15
Automatic reclosing function and synchronism check	Breaker failure protection and Backup overcurrent	Overvoltage/Undervoltage Protection	
without	with	without	C
without	with	with	D
with	without	without	N
with	without	with	P
with	with	without	Q
with	with	with	R

A.2 Accessories

Voltage Transformer Miniature Circuit Breaker

Nominal Values	Order Number
Thermal 1.6 A; magnetic 6 A	3RV1611-1AG14

External Converters

Optical interfaces for Profibus and DNP 3.0 are not possible with panel mounted housings. Please order in this case a device with the appropriate electrical RS485 interface, and the additional OLM converters listed below .
Note: The OLM converter 6GK1502-3CB10 requires an operating voltage of DC 24 V. If the operating voltage is > DC 24 V the additional power supply 7XV5810-0BA00 is required.

Interface used	Order device with additional module/OLM converter
Profibus DP/FMS double ring	Profibus DP/FMS RS485/ 6GK1502-3CB01
DNP 3.0 820 nm	DNP 3.0 RS485/ 7XV5650-0BA00

Interface Modules

Exchange modules for interfaces	Order No.
RS232	C53207-A351-D641-1
RS485	C53207-A351-D642-1
FO 820 nm	C53207-A351-D643-1
Profibus FMS RS485	C53207-A351-D603-1
Profibus FMS twin ring	C53207-A351-D606-1
Profibus DP RS485	C53207-A351-D611-1
Profibus DP twin ring	C53207-A351-D613-1
DNP 3.0 RS 485	C53207-A351-D631-1
DNP 3.0 820 nm	C53207-A351-D633-1
Ethernet electrical (EN100)	C53207-A351-D675-2
Ethernet optical (EN100)	C53207-A351-D676-1

Terminal Block Covering Caps

Terminal Block Covering Cap for Block Type	Order No.
18 terminal voltage, 12 terminal current block	C73334-A1-C31-1
12 terminal voltage, 8 terminal current block	C73334-A1-C32-1

Short-Circuit Links

Short Circuit Links for Purpose/Terminal Type	Order No.
Voltage connections (18 terminal or 12 terminal)	C73334-A1-C34-1
Current connections (12 terminal or 8 terminal)	C73334-A1-C33-1

Plug-in Connector

Plug-in Connector	Order No.
2-pin	C73334-A1-C35-1
3-pin	C73334-A1-C36-1

Mounting Brackets for 19" Racks

Name	Order No.
2 mounting brackets	C73165-A63-D200-1

Buffer battery

Lithium battery 3 V/1 Ah, type CR 1/2 AA	Order No.
VARTA	6127 101 301
Panasonic	BR-1/2AA

Interface Cable

An interface cable and the DIGSI operating software are required for the communication between the SIPROTEC 4 device and a PC or laptop.

Name	Order No.
Interface cable between PC and SIPROTEC, Cable with 9-pin male/female connectors	7XV5100-4

B Terminal Assignments

B.1	Housing for Panel Flush or Cubicle Mounting	266
B.2	Housing for Panel Surface Mounting	268

B.1 Housing for Panel Flush or Cubicle Mounting

7VK610*-*A

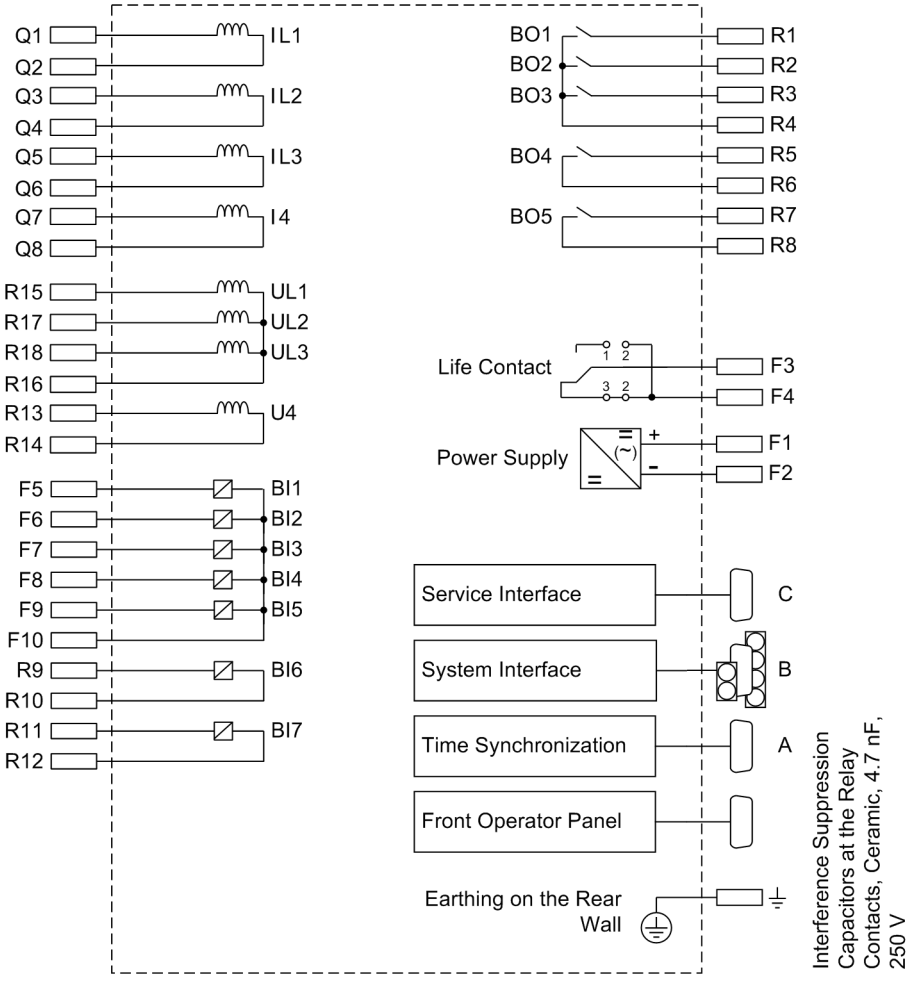

[schrankeinbau-7vk610-a-111102-kn, 1, en_GB]

Figure B-1 General diagram for 7VK610*-*A (panel flush mounted or cubicle mounted)

7VK611*-*A

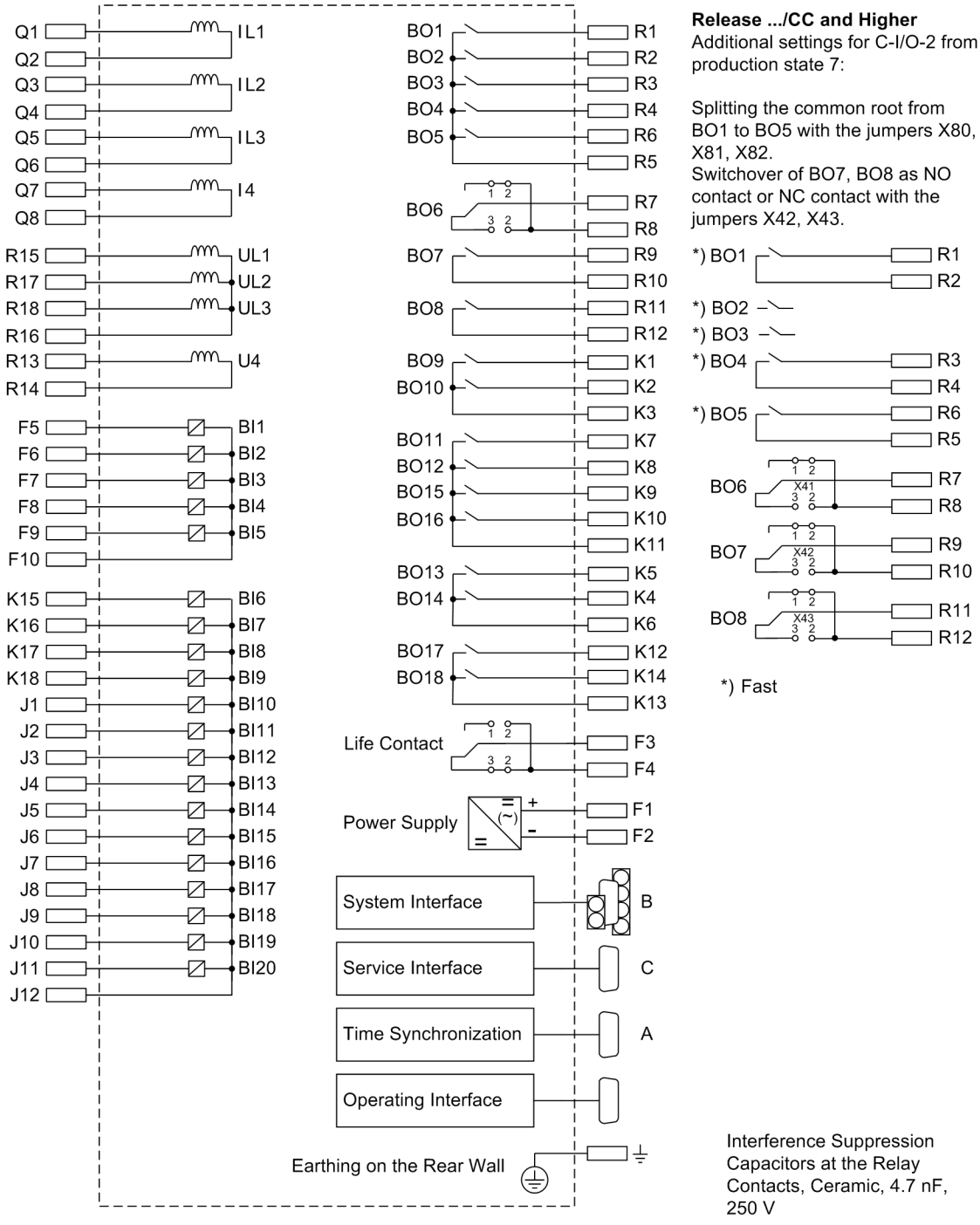

[schrankeinbau-7vk611-a-111102-kn, 1, en_GB]

Figure B-2 General diagram for 7VK611*-*A (panel flush mounted or cubicle mounted)

B.2 Housing for Panel Surface Mounting

7VK610*-*E

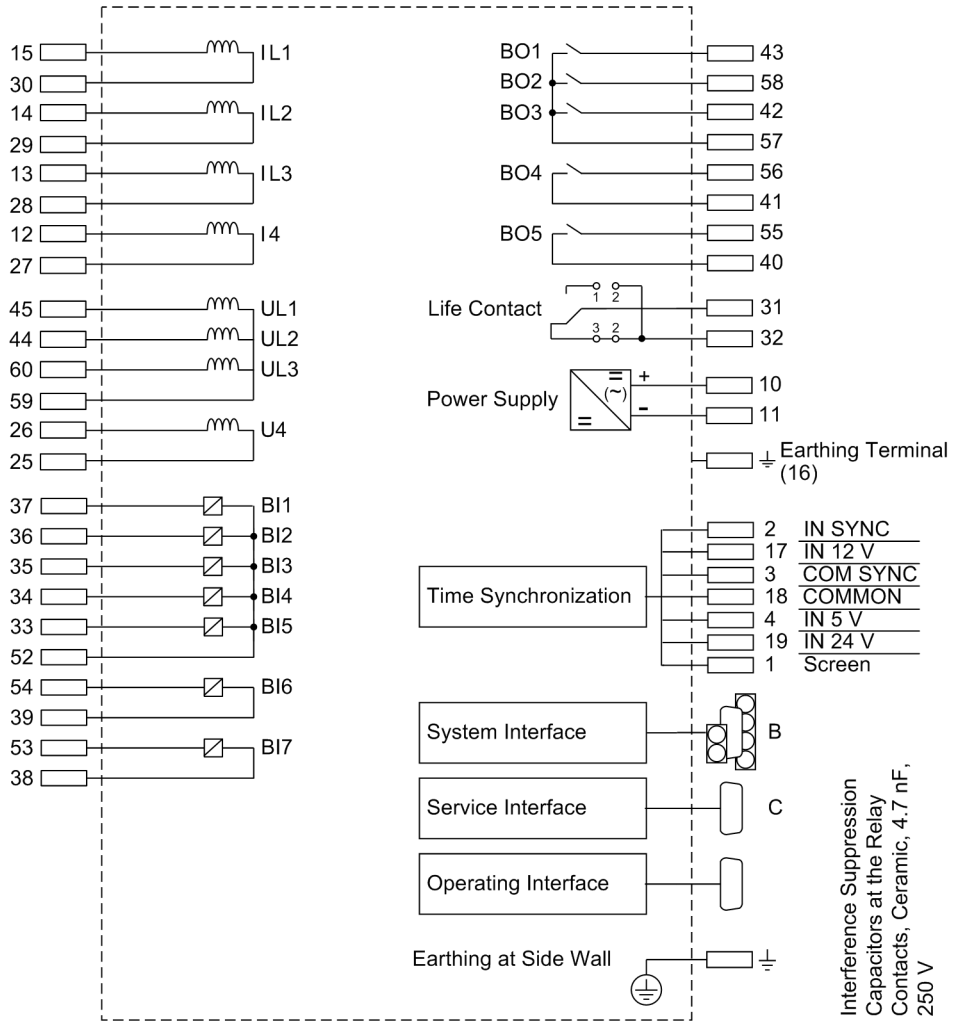

[schalttafelaufbau-7vk610-e-111102-kn, 1, en_GB]

Figure B-3 General diagram for 7VK610*-*E (panel surface mounted)

7VK611*-*E

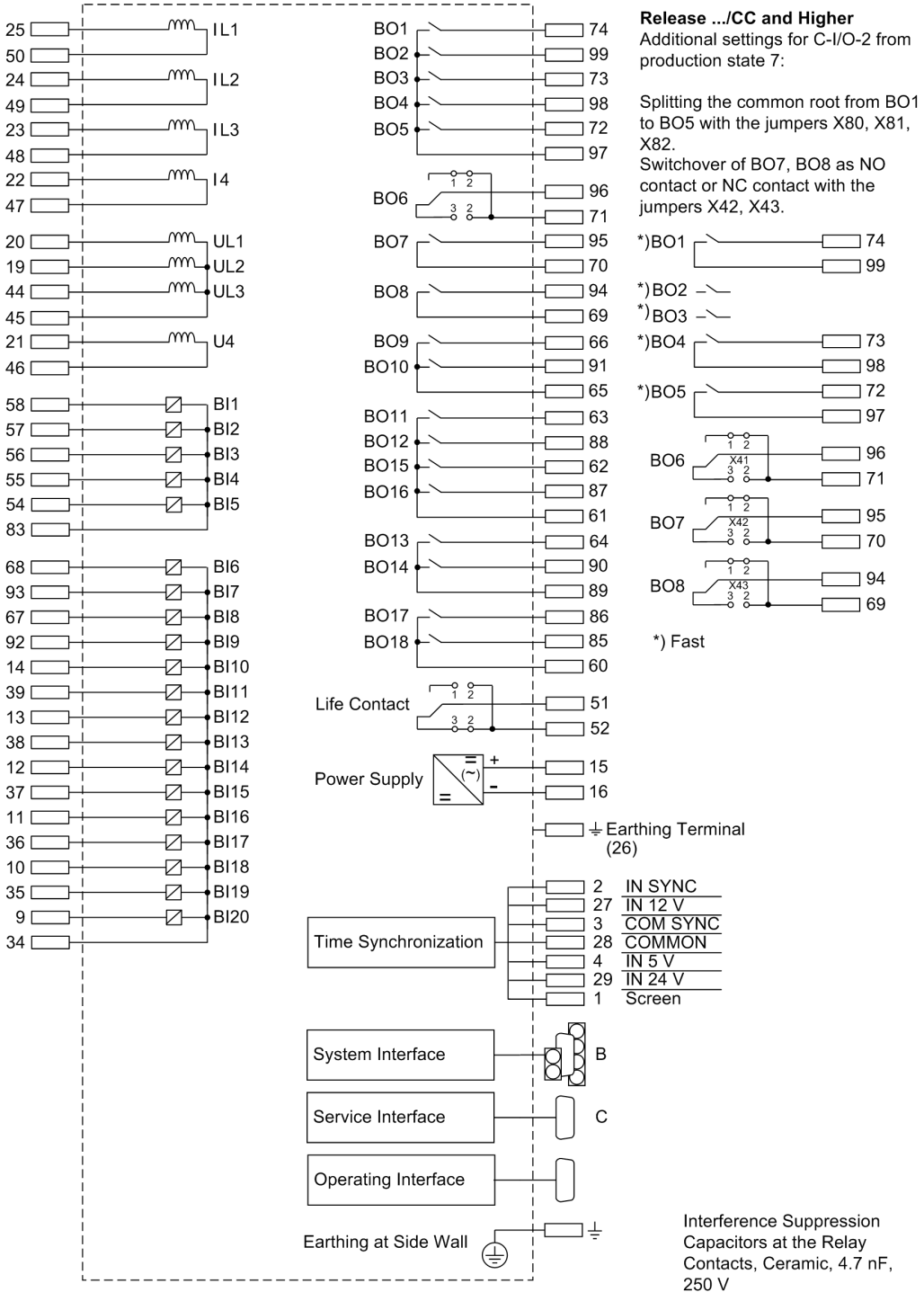

[schalttafelaufbau-7vk611-e-111102-kn, 1, en_GB]

Figure B-4 General diagram for 7VK611*-*E (panel surface mounted)

C Connection Examples

C.1	Current Transformer Connection Examples	272
C.2	Voltage Transformer Connection Examples	273

C.1 Current Transformer Connection Examples

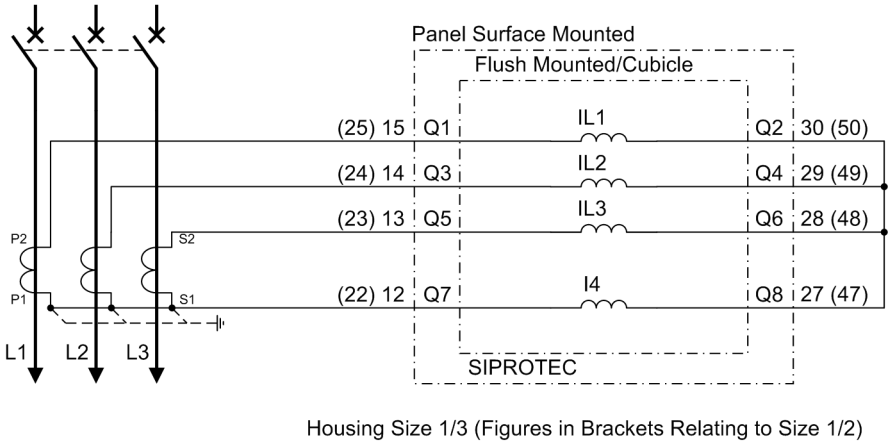

[anschl-beisp-3stromwandl-sternpkt-121102-kn, 1, en_GB]

Figure C-1 Current connections to three current transformers and a starpoint connection (normal circuit layout, for breaker failure protection and operational measurement)

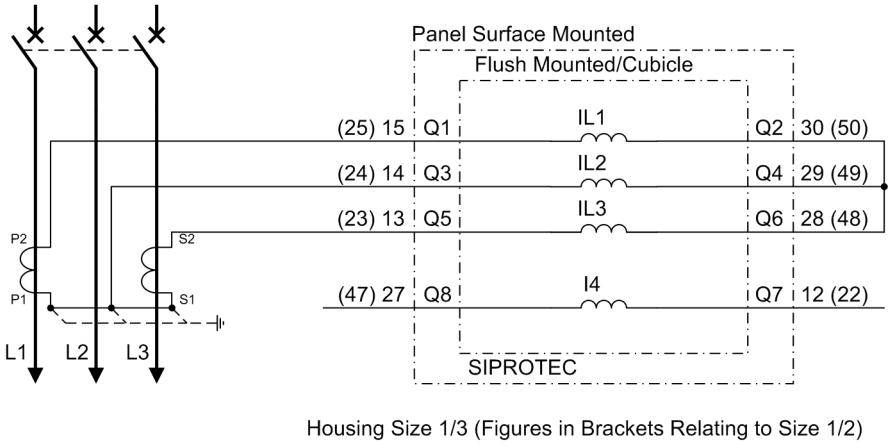

[anschl-beisp-2stromw-erdstromw-121102-kn, 1, en_GB]

Figure C-2 Current connections to 2 current transformer (for circuit breaker failure protection and operational measurement)— **not permitted for earthed system**

C.2 Voltage Transformer Connection Examples

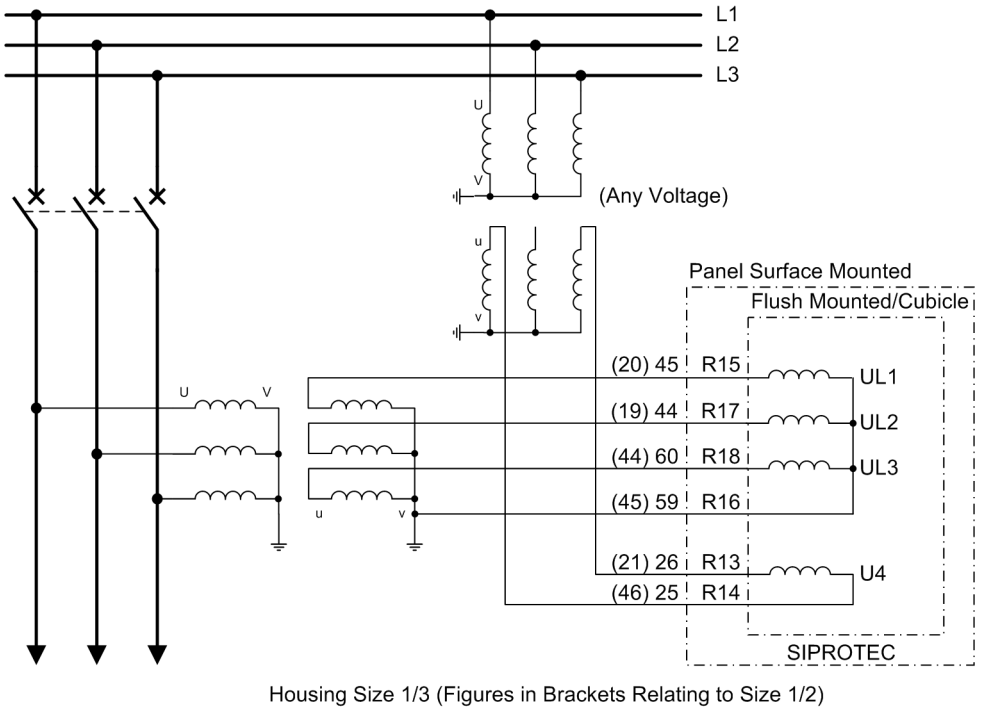

[spgw-anschl-und-beliebige-ss-spg-121102-kn, 1, en_GB]

Figure C-3 Voltage connections to three star-connected voltage transformers and additionally to any phase-to-phase voltage (for example for the control of synchronism check with three-phase dead line check, for voltage protection, operational measurement) – preferred for voltage connection

Irrespective of the connection type of the primary side, a single-phase voltage transformer must always be connected on secondary side to the first of the three-phase voltage inputs (R15/16) of the 7VK61!

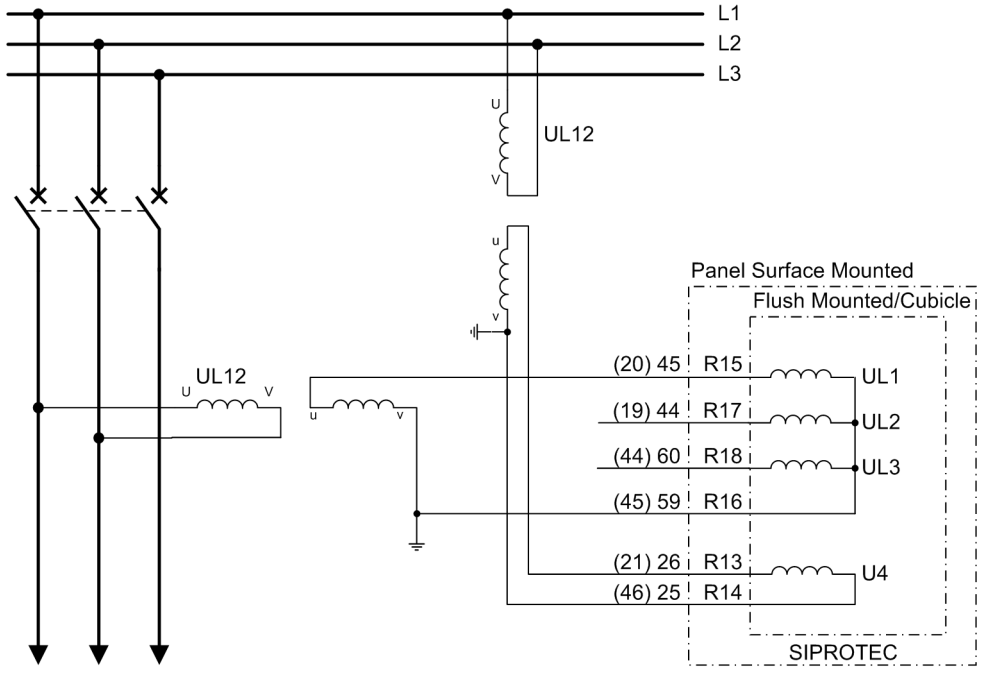

[spgw-anschluss-einphasig-ll-spg-121102-kn, 1, en_GB]

Figure C-4 Connection circuit for single-phase voltage transformers with phase-to-phase voltages (for the control of synchronism check with single-phase dead-line check, limited operational measurement)

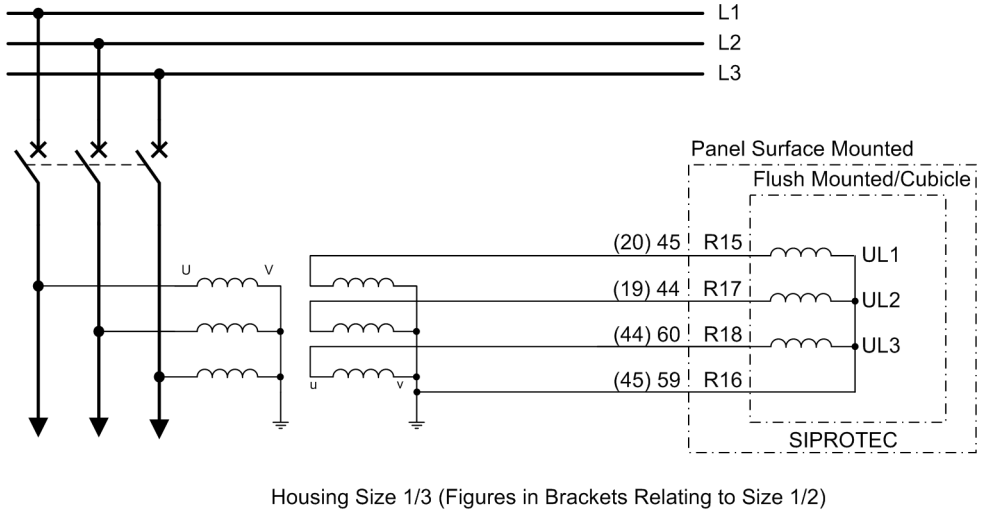

[anschl-beisp-spgw-anschl-normalanschl-121102-kn, 1, en_GB]

Figure C-5 Voltage connections to three star-connected voltage transformer (normal circuit layout, for voltage protection, operational measurement) – not available for Synchronism check applications

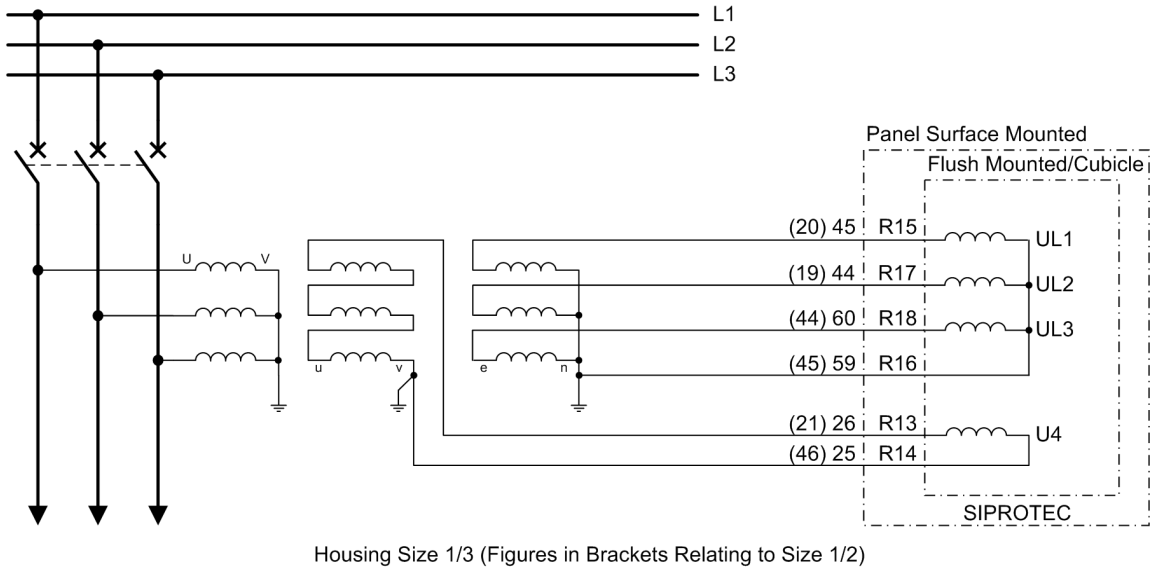

[anschl-beisp-spgw-anschl-mit-e-n-wickl-121102-kn, 1, en_GB]

Figure C-6 Voltage connections to three star-connected voltage transformers with additional open-delta windings (da–dn–winding, for voltage protection, voltage sum monitoring – **not available for synchronism check applications**

D Default Settings and Protocol-dependent Functions

When the device leaves the factory, a large number of LED indicators, binary inputs and outputs as well as function keys are already preset. They are summarized in the following table.

D.1	LEDs	278
D.2	Binary input default settings	279
D.3	Binary output default settings	280
D.4	Function key default settings	281
D.5	Default Display	282
D.6	Pre-defined CFC Charts	283
D.7	Protocol-dependent Functions	284

D.1 LEDs

Table D-1 LED Indication Presettings

LEDs	Allocated Function	Indication no.	Description
LED1	Relay PICKUP	501	Relay PICKUP
LED2	Relay TRIP	511	Relay GENERAL TRIP command
LED3	Definitive TRIP	536	Relay Definitive TRIP
LED4	BF T2-TRIP(bus)	1494	BF Trip T2 (busbar trip)
LED5	AR CLOSE Cmd.	2851	AR: Close command
LED6	AR not ready	2784	AR: Auto-reclose is not ready
LED7	Alarm Sum Event	160	Alarm Summary Event
LED8	Not configured	1	No Function configured
LED9	Not configured	1	No Function configured
LED10	Not configured	1	No Function configured
LED11	Not configured	1	No Function configured
LED12	Not configured	1	No Function configured
LED13	Not configured	1	No Function configured
LED14	Not configured	1	No Function configured

D.2 Binary input default settings

Table D-2 Further binary input presettings for 7VK610

Binary Input	Allocated Function	Indication no.	Description
BI1	>AR Start	2711	>External start of internal Auto reclose
	>BF release	1432	>BF: External release
BI2	>Trip 3pole AR	2716	>AR: External 3pole trip for AR start
	>BF Start 3pole	1415	>BF: External start 3pole
BI3	>CB1 3p Closed	410	>CB1 aux. 3p Closed (for AR, CB-Test)
	>CB 3p Closed	379	>CB aux. contact 3pole Closed
BI4	>CB1 Ready	371	>CB1 READY (for AR,CB-Test)
BI5	>Manual Close	356	>Manual close signal
BI6	>FAIL:Feeder VT	361	>Failure: Feeder VT (MCB tripped)
BI7	>FAIL:U4 VT	362	>Failure: Usy4 VT (MCB tripped)

Table D-3 Further binary input presettings for 7VK611

Binary Input	Allocated Function	Indication no.	Description
BI1	>AR Start	2711	>External start of internal Auto reclose
	>BF release	1432	>BF: External release
BI2	>BLOCK 1pole AR	2737	>AR: Block 1pole AR-cycle
BI3	>BLOCK 3pole AR	2738	>AR: Block 3pole AR-cycle
BI4	>CB1 Ready	371	>CB1 READY (for AR,CB-Test)
BI5	>Manual Close	356	>Manual close signal
BI6	>FAIL:Feeder VT	361	>Failure: Feeder VT (MCB tripped)
BI7	>FAIL:U4 VT	362	>Failure: Usy4 VT (MCB tripped)
BI8	>Trip L1 AR	2712	>AR: External trip L1 for AR start
	>BF Start L1	1435	>BF: External start L1
BI9	>Trip L2 AR	2713	>AR: External trip L2 for AR start
	>BF Start L2	1436	>BF: External start L2
BI10	>Trip L3 AR	2714	>AR: External trip L3 for AR start
	>BF Start L3	1437	>BF: External start L3
BI11	>CB1 Pole L1	366	>CB1 Pole L1 (for AR,CB-Test)
	>CB Aux. L1	351	>Circuit breaker aux. contact: Pole L1
BI12	>CB1 Pole L2	367	>CB1 Pole L2 (for AR,CB-Test)
	>CB Aux. L2	352	>Circuit breaker aux. contact: Pole L2
BI13	>CB1 Pole L3	368	>CB1 Pole L3 (for AR,CB-Test)
	>CB Aux. L3	353	>Circuit breaker aux. contact: Pole L3
BI14	Not configured	1	No Function configured
BI15	Not configured	1	No Function configured
BI16	Not configured	1	No Function configured
BI17	Not configured	1	No Function configured
BI18	Not configured	1	No Function configured
BI19	Not configured	1	No Function configured
BI20	Not configured	1	No Function configured

D.3 Binary output default settings

Table D-4 Further output relay presettings for 7VK610

Binary Output	Allocated Function	Indication no.	Description
BO1	Relay PICKUP	501	Relay PICKUP
BO2	Relay TRIP	511	Relay GENERAL TRIP command
BO3	Alarm Sum Event	160	Alarm Summary Event
BO4	BF T2-TRIP(bus)	1494	BF Trip T2 (busbar trip)
BO5	AR CLOSE Cmd.	2851	AR: Close command

Table D-5 Further output relay presettings for 7VK611

Binary Output	Allocated Function	Indication no.	Description
BO1	Relay PICKUP	501	Relay PICKUP
BO2	Relay TRIP	511	Relay GENERAL TRIP command
BO3	Alarm Sum Event	160	Alarm Summary Event
BO4	Not configured	1	No Function configured
BO5	AR CLOSE Cmd.	2851	AR: Close command
BO6	CB Alarm Supp	563	CB alarm suppressed
BO5	AR CLOSE Cmd.	2851	AR: Close command
BO8	BF T2-TRIP(bus)	1494	BF Trip T2 (busbar trip)
BO9	AR 1p Trip Perm	2864	AR: 1pole trip permitted by internal AR
BO10	Relay TRIP 1pL1	512	Relay TRIP command - Only Phase L1
	Relay TRIP 3ph.	515	Relay TRIP command Phases L123
BO11	Not configured	1	No Function configured
BO12	Not configured	1	No Function configured
BO13	Relay TRIP 1pL2	513	Relay TRIP command - Only Phase L2
	Relay TRIP 3ph.	515	Relay TRIP command Phases L123
BO14	Not configured	1	No Function configured
BO15	Not configured	1	No Function configured
BO16	Not configured	1	No Function configured
BO17	Relay TRIP 1pL3	514	Relay TRIP command - Only Phase L3
	Relay TRIP 3ph.	515	Relay TRIP command Phases L123
BO18	Not configured	1	No Function configured

D.4 Function key default settings

Table D-6 Applies to all devices and ordered variants

Function Keys	Allocated Function
F1	Display of the operational indications
F2	Display of the primary operational measured values
F3	Jump to heading above the last 8 fault messages
F4	Jump to submenu for resetting the min/max measured values

D.5 Default Display

4-line Display

The following selection is available as start page which may be configured. Parameter 640 **Start image DD** allows to select which of the available default displays will be displayed in normal mode.

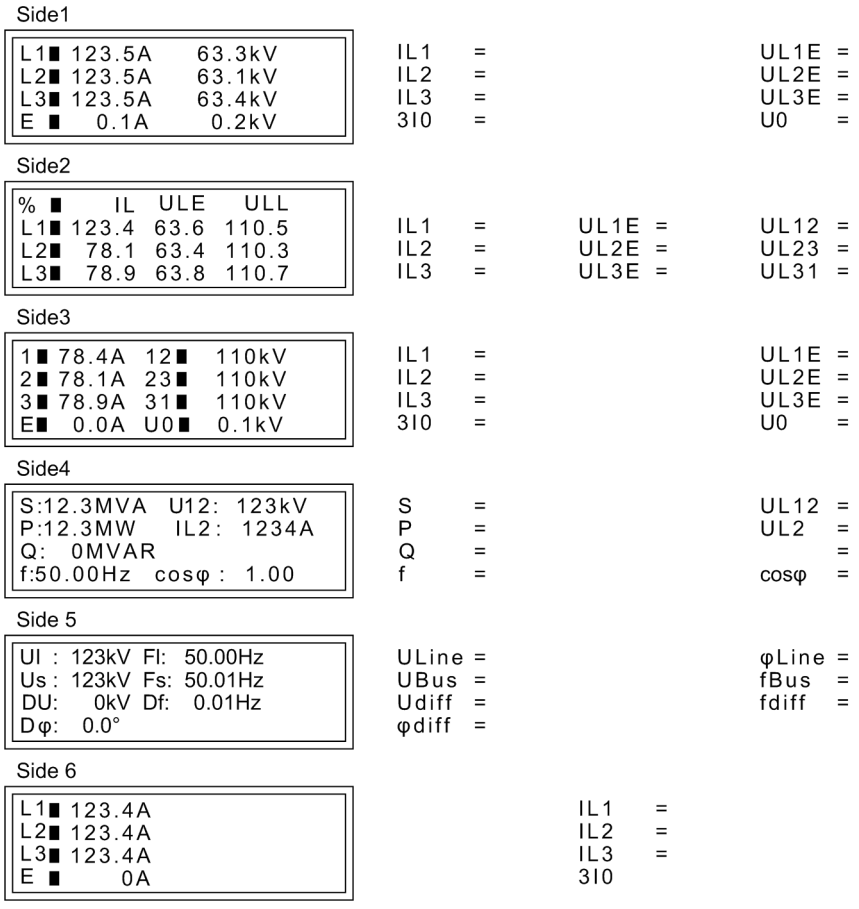

[vk61-alle-grundbilder-261102-kn, 1, en_GB]

Figure D-1 Default displays

Spontaneous Fault Indication of the 4-Line Display

The spontaneous annunciations on devices with 4-line display serve to display the most important data about a fault. They appear automatically in the display after pick-up of the device, in the sequence shown below.

Relay PICKUP:	A message indicating the protective function that picked up first
PU Time	Elapsed time from pick-up until drop-off
TRIP Time	Elapsed time from pick-up until the first trip command of a protection function

D.6 Pre-defined CFC Charts

One CFC chart is already installed when the SIPROTEC 4 device is delivered.

Device and System Logic

An event-controlled logic operation is implemented with blocks of the slow logic (**PLC1_BEARB** = slow PLC processing). In doing so, the binary input ">Data Stop" is modified from a single point indication (SP) into an internal single point indication (IntSP) by means of a negator block.

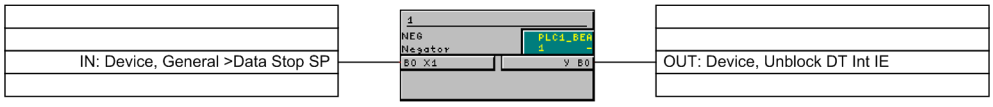

[cfc-mm-sperre-211002-kn, 1, en_GB]

Figure D-2 Logical Link between Input and Output

D.7 Protocol-dependent Functions

Protocol → / Function ↓	IEC 60870-5-103	IEC 61850 Ethernet (EN-100)	Profibus FMS	Profibus DP	DNP3.0	Additional service interface (optional)
Operational measured values	Yes	Yes	Yes	Yes	Yes	Yes
Metered values	Yes	Yes	Yes	Yes	Yes	Yes
Fault Recording	Yes	Yes	Yes	No. Only via the additional service interface	No. Only via the additional service interface	Yes
Remote protection setting	No. Only via the additional service interface	Yes with DIGSI via Ethernet	Yes with DIGSI via PROFIBUS	No. Only via the additional service interface	No. Only via the additional service interface	Yes
User-defined indications and switching objects	Yes	Yes	Yes	Pre-defined "user-defined messages" in CFC	Pre-defined "user-defined messages" in CFC	Yes
Time synchronization	Via protocol; DCF77/IRIG B; Interface; Binary input	Via protocol (NTP); DCF77/IRIG B; Interface; Binary input	Via protocol; DCF77/IRIG B; Interface; Binary input	Via DCF77/IRIG B; Interface; Binary input	Via protocol; DCF77/IRIG B; Interface; Binary input	-
Messages with time stamp	Yes	Yes	Yes	No	Yes	Yes
Commissioning aids						
Data transmission stop	Yes	Yes	Yes	No	No	Yes
Creating test messages	Yes	Yes	Yes	No	No	Yes
Physical mode	Asynchronous	Synchronous	Asynchronous	Asynchronous	Asynchronous	-
Transmission mode	Cyclical/event	Cyclical/event	Cyclical/event	Cyclical	Cyclical/event	-
Baudrate	4800 to 38400	up to 100 MBaud	up to 1,5 MBaud	up to 1,5 MBaud	2400 to 19200	2400 to 115200
Type	RS232 RS 485 fiber optic cable	Ethernet TP	RS485 optical fiber double ring	RS485 optical fiber double ring	RS485 optical fiber	RS232, RS485

E Functions, Settings, Information

E.1	Functional Scope	286
E.2	Settings	287
E.3	Information List	308
E.4	Group Indications	342
E.5	Measured Values	343

E.1 Functional Scope

Addr.	Information	Setting Options	Default Setting	Comments
103	Grp Chge OPTION	Disabled Enabled	Disabled	Setting Group Change Option
106	VT CONNECTION	3phase 1phase NO	3phase	Voltage transformer connection
107	CT CONNECTION	YES NO	YES	Current transformer connection
110	Trip mode	3pole only 1-/3pole	3pole only	Trip mode
126	Back-Up O/C	Disabled TOC IEC TOC ANSI TOC IEC /w 3ST	Disabled	Backup overcurrent
133	Auto Reclose	1 AR-cycle 2 AR-cycles 3 AR-cycles 4 AR-cycles 5 AR-cycles 6 AR-cycles 7 AR-cycles 8 AR-cycles ADT Disabled	Disabled	Auto-Reclose Function
134	AR control mode	Pickup w/ Tact Pickup w/o Tact Trip w/ Tact Trip w/o Tact	Trip w/ Tact	Auto-Reclose control mode
135	Synchro-Check	Disabled Enabled	Disabled	Synchronism and Voltage Check
137	U/O VOLTAGE	Disabled Enabled	Disabled	Under / Overvoltage Protection
139	BREAKER FAILURE	Disabled Enabled enabled w/ 3I0>	Disabled	Breaker Failure Protection
140	Trip Cir. Sup.	Disabled 1 trip circuit 2 trip circuits 3 trip circuits	Disabled	Trip Circuit Supervision

E.2 Settings

Addresses which have an appended "A" can only be changed with DIGSI, under Additional Settings.

The table indicates region-specific presettings. Column C (configuration) indicates the corresponding secondary nominal current of the current transformer.

Addr.	Parameter	Function	C	Setting Options	Default Setting	Comments
201	CT Starpoint	P.System Data 1		towards Line towards Busbar	towards Line	CT Starpoint
203	Unom PRIMARY	P.System Data 1		1.0 .. 1200.0 kV	400.0 kV	Rated Primary Voltage
204	Unom SECONDARY	P.System Data 1		80 .. 125 V	100 V	Rated Secondary Voltage (Ph-Ph)
205	CT PRIMARY	P.System Data 1		10 .. 5000 A	1000 A	CT Rated Primary Current
206	CT SECONDARY	P.System Data 1		1A 5A	1A	CT Rated Secondary Current
207	SystemStarpoint	P.System Data 1		Solid Earthed Peterson-Coil Isolated	Solid Earthed	System Starpoint is
210	U4 transformer	P.System Data 1		Not connected Udelta transf. Usy2 transf. Ux transformer	Not connected	U4 voltage transformer is
211	Uph / Udelta	P.System Data 1		0.10 .. 9.99	1.73	Matching ratio Phase-VT To Open-Delta-VT
212	Usy2 connection	P.System Data 1		L1-E L2-E L3-E L1-L2 L2-L3 L3-L1	L1-L2	VT connection for Usy2
214A	φ Usy2-Usy1	P.System Data 1		0 .. 360 °	0 °	Angle adjustment Usy2-Usy1
215	Usy1/Usy2 ratio	P.System Data 1		0.50 .. 2.00	1.00	Matching ratio Usy1 / Usy2
220	I4 transformer	P.System Data 1		Not connected In prot. line	In prot. line	I4 current transformer is
221	I4/Iph CT	P.System Data 1		0.010 .. 5.000	1.000	Matching ratio I4/Iph for CT's
230	Rated Frequency	P.System Data 1		50 Hz 60 Hz	50 Hz	Rated Frequency
235	PHASE SEQ.	P.System Data 1		L1 L2 L3 L1 L3 L2	L1 L2 L3	Phase Sequence
239	T-CB close	P.System Data 1		0.01 .. 0.60 sec	0.06 sec	Closing (operating) time of CB
240A	TMin TRIP CMD	P.System Data 1		0.02 .. 30.00 sec	0.10 sec	Minimum TRIP Command Duration
241A	TMax CLOSE CMD	P.System Data 1		0.01 .. 30.00 sec	0.10 sec	Maximum Close Command Duration

Addr.	Parameter	Function	C	Setting Options	Default Setting	Comments
242	T-CBtest-dead	P.System Data 1		0.00 .. 30.00 sec	0.10 sec	Dead Time for CB test-autoreclosure
302	CHANGE	Change Group		Group A Group B Group C Group D Binary Input Protocol	Group A	Change to Another Setting Group
402A	WAVEFORM-TRIGGER	Osc. Fault Rec.		Save w. Pickup Save w. TRIP Start w. TRIP	Save w. Pickup	Waveform Capture
403A	WAVEFORM DATA	Osc. Fault Rec.		Fault event Pow.Sys.Flt.	Fault event	Scope of Waveform Data
410	MAX. LENGTH	Osc. Fault Rec.		0.30 .. 5.00 sec	2.00 sec	Max. length of a Wave-form Capture Record
411	PRE. TRIG. TIME	Osc. Fault Rec.		0.05 .. 0.50 sec	0.25 sec	Captured Waveform Prior to Trigger
412	POST REC. TIME	Osc. Fault Rec.		0.05 .. 0.50 sec	0.10 sec	Captured Waveform after Event
415	BinIn CAPT.TIME	Osc. Fault Rec.		0.10 .. 5.00 sec	0.50 sec	Capture Time via Binary Input
610	FltDisp.LED/LCD	Device		Target on PU Target on TRIP	Target on PU	Fault Display on LED / LCD
625A	T MIN LED HOLD	Device		0 .. 60 min	0 min	Minimum hold time of latched LEDs
640	Start image DD	Device		image 1 image 2 image 3 image 4 image 5 image 6	image 1	Start image Default Display
1103	FullScaleVolt.	P.System Data 2		1.0 .. 1200.0 kV	400.0 kV	Measurement: Full Scale Voltage (100%)
1104	FullScaleCurr.	P.System Data 2		10 .. 5000 A	1000 A	Measurement: Full Scale Current (100%)
1107	P,Q sign	P.System Data 2		not reversed reversed	not reversed	P,Q operational measured values sign
1130A	PoleOpenCurrent	P.System Data 2	1A	0.05 .. 1.00 A	0.10 A	Pole Open Current Threshold
			5A	0.25 .. 5.00 A	0.50 A	
1131A	PoleOpenVoltage	P.System Data 2		2 .. 70 V	30 V	Pole Open Voltage Threshold
1135	Reset Trip CMD	P.System Data 2		CurrentOpenPole Current AND CB Pickup Reset	CurrentOpenPole	RESET of Trip Command
1136	OpenPoleDetect.	P.System Data 2		OFF Current AND CB w/ measurement	w/ measurement	open pole detector
1150A	SI Time Man.Cl	P.System Data 2		0.01 .. 30.00 sec	0.30 sec	Seal-in Time after MANUAL closures

Addr.	Parameter	Function	C	Setting Options	Default Setting	Comments
1151	MAN. CLOSE	P.System Data 2		with Sync-check w/o Sync-check NO	NO	Manual CLOSE COMMAND generation
1152	Man.Clos. Imp.	P.System Data 2		OBJVERWparaMEIN-STELL	none	MANUAL Closure Impulse after CONTROL
2601	Operating Mode	Back-Up O/C		ON OFF	ON	Operating mode
2610	Iph>>	Back-Up O/C	1A	0.05 .. 50.00 A	2.00 A	Iph>> Pickup
			5A	0.25 .. 250.00 A	10.00 A	
2611	T Iph>>	Back-Up O/C		0.00 .. 30.00 sec	0.30 sec	T Iph>> Time delay
2612	3I0>> PICKUP	Back-Up O/C	1A	0.05 .. 25.00 A	0.50 A	3I0>> Pickup
			5A	0.25 .. 125.00 A	2.50 A	
2613	T 3I0>>	Back-Up O/C		0.00 .. 30.00 sec	2.00 sec	T 3I0>> Time delay
2614	I>> InstTrip BI	Back-Up O/C		NO YES	YES	Instantaneous trip via BI
2615	I>> SOTF	Back-Up O/C		NO YES	NO	Instantaneous trip after SwitchOnToFault
2620	Iph>	Back-Up O/C	1A	0.05 .. 50.00 A	1.50 A	Iph> Pickup
			5A	0.25 .. 250.00 A	7.50 A	
2621	T Iph>	Back-Up O/C		0.00 .. 30.00 sec	0.50 sec	T Iph> Time delay
2622	3I0>	Back-Up O/C	1A	0.05 .. 25.00 A	0.20 A	3I0> Pickup
			5A	0.25 .. 125.00 A	1.00 A	
2623	T 3I0>	Back-Up O/C		0.00 .. 30.00 sec	2.00 sec	T 3I0> Time delay
2624	I> Telep/BI	Back-Up O/C		NO YES	NO	Instantaneous trip via Teleprot./BI
2625	I> SOTF	Back-Up O/C		NO YES	NO	Instantaneous trip after SwitchOnToFault
2630	Iph> STUB	Back-Up O/C	1A	0.05 .. 50.00 A	1.50 A	Iph> STUB Pickup
			5A	0.25 .. 250.00 A	7.50 A	
2631	T Iph STUB	Back-Up O/C		0.00 .. 30.00 sec	0.30 sec	T Iph STUB Time delay
2632	3I0> STUB	Back-Up O/C	1A	0.05 .. 25.00 A	0.20 A	3I0> STUB Pickup
			5A	0.25 .. 125.00 A	1.00 A	
2633	T 3I0 STUB	Back-Up O/C		0.00 .. 30.00 sec	2.00 sec	T 3I0 STUB Time delay
2634	I-STUB Telep/BI	Back-Up O/C		NO YES	NO	Instantaneous trip via Teleprot./BI
2635	I-STUB SOTF	Back-Up O/C		NO YES	NO	Instantaneous trip after SwitchOnToFault
2640	Ip>	Back-Up O/C	1A	0.10 .. 4.00 A	2147483647 A	Ip> Pickup
			5A	0.50 .. 20.00 A	2147483647 A	
2642	T Ip Time Dial	Back-Up O/C		0.05 .. 3.00 sec	0.50 sec	T Ip Time Dial
2643	Time Dial TD Ip	Back-Up O/C		0.50 .. 15.00	5.00	Time Dial TD Ip
2646	T Ip Add	Back-Up O/C		0.00 .. 30.00 sec	0.00 sec	T Ip Additional Time Delay
2650	3I0p PICKUP	Back-Up O/C	1A	0.05 .. 4.00 A	2147483647 A	3I0p Pickup
			5A	0.25 .. 20.00 A	2147483647 A	
2652	T 3I0p TimeDial	Back-Up O/C		0.05 .. 3.00 sec	0.50 sec	T 3I0p Time Dial
2653	TimeDial TD3I0p	Back-Up O/C		0.50 .. 15.00	5.00	Time Dial TD 3I0p
2656	T 3I0p Add	Back-Up O/C		0.00 .. 30.00 sec	0.00 sec	T 3I0p Additional Time Delay

Addr.	Parameter	Function	C	Setting Options	Default Setting	Comments
2660	IEC Curve	Back-Up O/C		Normal Inverse Very Inverse Extremely Inv. LongTimeInverse	Normal Inverse	IEC Curve
2661	ANSI Curve	Back-Up O/C		Inverse Short Inverse Long Inverse Moderately Inv. Very Inverse Extremely Inv. Definite Inv.	Inverse	ANSI Curve
2670	I(3I0)p Tele/BI	Back-Up O/C		NO YES	NO	Instantaneous trip via Teleprot./BI
2671	I(3I0)p SOTF	Back-Up O/C		NO YES	NO	Instantaneous trip after SwitchOnToFault
2680	SOTF Time DELAY	Back-Up O/C		0.00 .. 30.00 sec	0.00 sec	Trip time delay after SOTF
2901	MEASURE. SUPERV	Meas-urem.Superv		ON OFF	ON	Measurement Supervision
2902A	BALANCE U-LIMIT	Meas-urem.Superv		10 .. 100 V	50 V	Voltage Threshold for Balance Monitoring
2903A	BAL. FACTOR U	Meas-urem.Superv		0.58 .. 0.95	0.75	Balance Factor for Voltage Monitor
2904A	BALANCE I LIMIT	Meas-urem.Superv	1A	0.10 .. 1.00 A	0.50 A	Current Balance Monitor
			5A	0.50 .. 5.00 A	2.50 A	
2905A	BAL. FACTOR I	Meas-urem.Superv		0.10 .. 0.95	0.50	Balance Factor for Current Monitor
2906A	ΣI THRESHOLD	Meas-urem.Superv	1A	0.05 .. 2.00 A	0.10 A	Summated Current Monitoring Threshold
			5A	0.25 .. 10.00 A	0.50 A	
2907A	ΣI FACTOR	Meas-urem.Superv		0.00 .. 0.95	0.10	Summated Current Monitoring Factor
2908A	T BAL. U LIMIT	Meas-urem.Superv		5 .. 100 sec	5 sec	T Balance Factor for Voltage Monitor
2909A	T BAL. I LIMIT	Meas-urem.Superv		5 .. 100 sec	5 sec	T Current Balance Monitor
2910	FUSE FAIL MON.	Meas-urem.Superv		ON OFF	ON	Fuse Failure Monitor
2911A	FFM U>(min)	Meas-urem.Superv		10 .. 100 V	30 V	Minimum Voltage Threshold U>
2912A	FFM I< (max)	Meas-urem.Superv	1A	0.10 .. 1.00 A	0.10 A	Maximum Current Threshold I<
			5A	0.50 .. 5.00 A	0.50 A	
2913A	FFM U<max (3ph)	Meas-urem.Superv		2 .. 100 V	15 V	Maximum Voltage Threshold U< (3phase)
2914A	FFM Idelta (3p)	Meas-urem.Superv	1A	0.05 .. 1.00 A	0.10 A	Delta Current Threshold (3phase)
			5A	0.25 .. 5.00 A	0.50 A	
2915	V-Supervision	Meas-urem.Superv		w/ CURR.SUP w/ I> & CBaux OFF	w/ CURR.SUP	Voltage Failure Supervision
2916A	T V-Supervision	Meas-urem.Superv		0.00 .. 30.00 sec	3.00 sec	Delay Voltage Failure Supervision

Addr.	Parameter	Function	C	Setting Options	Default Setting	Comments
2941	φA	Meas-urem.Superv		0 .. 359 °	200 °	Limit setting PhiA
2942	φB	Meas-urem.Superv		0 .. 359 °	340 °	Limit setting PhiB
2943	I1>	Meas-urem.Superv	1A	0.05 .. 2.00 A	0.05 A	Minimum value I1>
			5A	0.25 .. 10.00 A	0.25 A	
2944	U1>	Meas-urem.Superv		2 .. 70 V	20 V	Minimum value U1>
3401	AUTO RECLOSE	Autoreclosure		OFF ON	ON	Auto-Reclose function
3402	CB? 1.TRIP	Autoreclosure		YES NO	NO	CB ready interrogation at 1st trip
3403	T-RECLAIM	Autoreclosure		0.50 .. 300.00 sec	3.00 sec	Reclaim time after successful AR cycle
3403	T-RECLAIM	Autoreclosure		0.50 .. 300.00 sec	3.00 sec	Reclaim time after successful AR cycle
3404	T-BLOCK MC	Autoreclosure		0.50 .. 300.00 sec	1.00 sec	AR blocking duration after manual close
3406	EV. FLT. RECOG.	Autoreclosure		with PICKUP with TRIP	with TRIP	Evolving fault recognition
3407	EV. FLT. MODE	Autoreclosure		blocks AR starts 3p AR	starts 3p AR	Evolving fault (during the dead time)
3408	T-Start MONITOR	Autoreclosure		0.01 .. 300.00 sec	0.20 sec	AR start-signal monitoring time
3409	CB TIME OUT	Autoreclosure		0.01 .. 300.00 sec	3.00 sec	Circuit Breaker (CB) Supervision Time
3410	T RemoteClose	Autoreclosure		0.00 .. 300.00 sec	2147483647 sec	Send delay for remote close command
3411A	T-DEAD EXT.	Autoreclosure		0.50 .. 300.00 sec	2147483647 sec	Maximum dead time extension
3425	AR w/ BackUpO/C	Autoreclosure		YES NO	YES	AR with back-up overcur-rent
3430	AR TRIP 3pole	Autoreclosure Autoreclosure		YES NO	YES	3pole TRIP by AR
3431	DLC or RDT	Autoreclosure		WITHOUT RDT DLC	WITHOUT	Dead Line Check or Reduced Dead Time
3433	T-ACTION ADT	Autoreclosure		0.01 .. 300.00 sec	0.20 sec	Action time
3434	T-MAX ADT	Autoreclosure		0.50 .. 3000.00 sec	5.00 sec	Maximum dead time
3435	ADT 1p allowed	Autoreclosure		YES NO	NO	1pole TRIP allowed
3436	ADT CB? CLOSE	Autoreclosure		YES NO	NO	CB ready interrogation before reclosing
3437	ADT SynRequest	Autoreclosure		YES NO	NO	Request for synchro-check after 3pole AR
3438	T U-stable	Autoreclosure Autoreclosure		0.10 .. 30.00 sec	0.10 sec	Supervision time for dead/ live voltage
3440	U-live>	Autoreclosure Autoreclosure		30 .. 90 V	48 V	Voltage threshold for live line or bus

Addr.	Parameter	Function	C	Setting Options	Default Setting	Comments
3441	U-dead<	Autoreclosure Autoreclosure		2 .. 70 V	30 V	Voltage threshold for dead line or bus
3450	1.AR: START	Autoreclosure		YES NO	YES	Start of AR allowed in this cycle
3451	1.AR: T-ACTION	Autoreclosure		0.01 .. 300.00 sec	0.20 sec	Action time
3453	1.AR Tdead 1Flt	Autoreclosure		0.01 .. 1800.00 sec	1.20 sec	Dead time after 1phase faults
3454	1.AR Tdead 2Flt	Autoreclosure		0.01 .. 1800.00 sec	1.20 sec	Dead time after 2phase faults
3455	1.AR Tdead 3Flt	Autoreclosure		0.01 .. 1800.00 sec	0.50 sec	Dead time after 3phase faults
3456	1.AR Tdead1Trip	Autoreclosure		0.01 .. 1800.00 sec	1.20 sec	Dead time after 1pole trip
3457	1.AR Tdead3Trip	Autoreclosure		0.01 .. 1800.00 sec	0.50 sec	Dead time after 3pole trip
3458	1.AR: Tdead EV.	Autoreclosure		0.01 .. 1800.00 sec	1.20 sec	Dead time after evolving fault
3459	1.AR: CB? CLOSE	Autoreclosure		YES NO	NO	CB ready interrogation before reclosing
3460	1.AR SynRequest	Autoreclosure		YES NO	NO	Request for synchro-check after 3pole AR
3461	2.AR: START	Autoreclosure		YES NO	NO	AR start allowed in this cycle
3462	2.AR: T-ACTION	Autoreclosure		0.01 .. 300.00 sec	0.20 sec	Action time
3464	2.AR Tdead 1Flt	Autoreclosure		0.01 .. 1800.00 sec	1.20 sec	Dead time after 1phase faults
3465	2.AR Tdead 2Flt	Autoreclosure		0.01 .. 1800.00 sec	1.20 sec	Dead time after 2phase faults
3466	2.AR Tdead 3Flt	Autoreclosure		0.01 .. 1800.00 sec	0.50 sec	Dead time after 3phase faults
3467	2.AR Tdead1Trip	Autoreclosure		0.01 .. 1800.00 sec	2147483647 sec	Dead time after 1pole trip
3468	2.AR Tdead3Trip	Autoreclosure		0.01 .. 1800.00 sec	0.50 sec	Dead time after 3pole trip
3469	2.AR: Tdead EV.	Autoreclosure		0.01 .. 1800.00 sec	1.20 sec	Dead time after evolving fault
3470	2.AR: CB? CLOSE	Autoreclosure		YES NO	NO	CB ready interrogation before reclosing
3471	2.AR SynRequest	Autoreclosure		YES NO	NO	Request for synchro-check after 3pole AR
3472	3.AR: START	Autoreclosure		YES NO	NO	AR start allowed in this cycle
3473	3.AR: T-ACTION	Autoreclosure		0.01 .. 300.00 sec	0.20 sec	Action time
3475	3.AR Tdead 1Flt	Autoreclosure		0.01 .. 1800.00 sec	1.20 sec	Dead time after 1phase faults
3476	3.AR Tdead 2Flt	Autoreclosure		0.01 .. 1800.00 sec	1.20 sec	Dead time after 2phase faults
3477	3.AR Tdead 3Flt	Autoreclosure		0.01 .. 1800.00 sec	0.50 sec	Dead time after 3phase faults
3478	3.AR Tdead1Trip	Autoreclosure		0.01 .. 1800.00 sec	2147483647 sec	Dead time after 1pole trip
3479	3.AR Tdead3Trip	Autoreclosure		0.01 .. 1800.00 sec	0.50 sec	Dead time after 3pole trip
3480	3.AR: Tdead EV.	Autoreclosure		0.01 .. 1800.00 sec	1.20 sec	Dead time after evolving fault

Addr.	Parameter	Function	C	Setting Options	Default Setting	Comments
3481	3.AR: CB? CLOSE	Autoreclosure		YES NO	NO	CB ready interrogation before reclosing
3482	3.AR SynRequest	Autoreclosure		YES NO	NO	Request for synchro-check after 3pole AR
3483	4.AR: START	Autoreclosure		YES NO	NO	AR start allowed in this cycle
3484	4.AR: T-ACTION	Autoreclosure		0.01 .. 300.00 sec	0.20 sec	Action time
3486	4.AR Tdead 1Flt	Autoreclosure		0.01 .. 1800.00 sec	1.20 sec	Dead time after 1phase faults
3487	4.AR Tdead 2Flt	Autoreclosure		0.01 .. 1800.00 sec	1.20 sec	Dead time after 2phase faults
3488	4.AR Tdead 3Flt	Autoreclosure		0.01 .. 1800.00 sec	0.50 sec	Dead time after 3phase faults
3489	4.AR Tdead1Trip	Autoreclosure		0.01 .. 1800.00 sec	2147483647 sec	Dead time after 1pole trip
3490	4.AR Tdead3Trip	Autoreclosure		0.01 .. 1800.00 sec	0.50 sec	Dead time after 3pole trip
3491	4.AR: Tdead EV.	Autoreclosure		0.01 .. 1800.00 sec	1.20 sec	Dead time after evolving fault
3492	4.AR: CB? CLOSE	Autoreclosure		YES NO	NO	CB ready interrogation before reclosing
3493	4.AR SynRequest	Autoreclosure		YES NO	NO	Request for synchro-check after 3pole AR
3501	FCT Synchronism	Sync. Check		ON OFF ON:w/o CloseCmd	ON	Synchronism and Voltage Check function
3502	Dead Volt. Thr.	Sync. Check		1 .. 100 V	5 V	Voltage threshold dead line / bus
3503	Live Volt. Thr.	Sync. Check		20 .. 125 V	90 V	Voltage threshold live line / bus
3504	Umax	Sync. Check		20 .. 140 V	110 V	Maximum permissible voltage
3507	T-SYN. DURATION	Sync. Check		0.01 .. 600.00 sec	1.00 sec	Maximum duration of synchronism-check
3508	T SYNC-STAB	Sync. Check		0.00 .. 30.00 sec	0.00 sec	Synchronous condition stability timer
3509	SyncCB	Sync. Check		OBJVERWparaMEIN-STELL	none	Synchronizable circuit breaker
3510	Op.mode with AR	Sync. Check		with T-CB close w/o T-CB close	w/o T-CB close	Operating mode with AR
3511	AR maxVolt.Diff	Sync. Check		1.0 .. 60.0 V	2.0 V	Maximum voltage difference
3512	AR maxFreq.Diff	Sync. Check		0.03 .. 2.00 Hz	0.10 Hz	Maximum frequency difference
3513	AR maxAngleDiff	Sync. Check		2 .. 80 °	10 °	Maximum angle difference
3515A	AR SYNC-CHECK	Sync. Check		YES NO	YES	AR at Usy2>, Usy1>, and Synchr.
3516	AR Usy1<Usy2>	Sync. Check		YES NO	NO	AR at Usy1< and Usy2>
3517	AR Usy1>Usy2<	Sync. Check		YES NO	NO	AR at Usy1> and Usy2<

Addr.	Parameter	Function	C	Setting Options	Default Setting	Comments
3518	AR Usy1<Usy2<	Sync. Check		YES NO	NO	AR at Usy1< and Usy2<
3519	AR OVERRIDE	Sync. Check		YES NO	NO	Override of any check before AR
3530	Op.mode with MC	Sync. Check		with T-CB close w/o T-CB close	w/o T-CB close	Operating mode with Man.Cl
3531	MC maxVolt.Diff	Sync. Check		1.0 .. 60.0 V	2.0 V	Maximum voltage difference
3532	MC maxFreq.Diff	Sync. Check		0.03 .. 2.00 Hz	0.10 Hz	Maximum frequency difference
3533	MC maxAngleDiff	Sync. Check		2 .. 80 °	10 °	Maximum angle difference
3535A	MC SYNCHR	Sync. Check		YES NO	YES	Manual Close at Usy2>, Usy1>, and Synchr
3536	MC Usy1< Usy2>	Sync. Check		YES NO	NO	Manual Close at Usy1< and Usy2>
3537	MC Usy1> Usy2<	Sync. Check		YES NO	NO	Manual Close at Usy1> and Usy2<
3538	MC Usy1< Usy2<	Sync. Check		YES NO	NO	Manual Close at Usy1< and Usy2<
3539	MC OVERRIDE	Sync. Check		YES NO	NO	Override of any check before Man.Cl
3701	Uph-e>(>)	Voltage Prot.		OFF Alarm Only ON U>Alarm U>>Trip	OFF	Operating mode Uph-e overvoltage prot.
3702	Uph-e>	Voltage Prot.		1.0 .. 170.0 V	85.0 V	Uph-e> Pickup
3703	T Uph-e>	Voltage Prot.		0.00 .. 100.00 sec	2.00 sec	T Uph-e> Time Delay
3704	Uph-e>>	Voltage Prot.		1.0 .. 170.0 V	100.0 V	Uph-e>> Pickup
3705	T Uph-e>>	Voltage Prot.		0.00 .. 100.00 sec	1.00 sec	T Uph-e>> Time Delay
3709A	Uph-e>(>) RESET	Voltage Prot.		0.30 .. 0.99	0.98	Uph-e>(>) Reset ratio
3711	Uph-ph>(>)	Voltage Prot.		OFF Alarm Only ON U>Alarm U>>Trip	OFF	Operating mode Uph-ph overvoltage prot.
3712	Uph-ph>	Voltage Prot.		2.0 .. 220.0 V	150.0 V	Uph-ph> Pickup
3713	T Uph-ph>	Voltage Prot.		0.00 .. 100.00 sec	2.00 sec	T Uph-ph> Time Delay
3714	Uph-ph>>	Voltage Prot.		2.0 .. 220.0 V	175.0 V	Uph-ph>> Pickup
3715	T Uph-ph>>	Voltage Prot.		0.00 .. 100.00 sec	1.00 sec	T Uph-ph>> Time Delay
3719A	Uphph>(>) RESET	Voltage Prot.		0.30 .. 0.99	0.98	Uph-ph>(>) Reset ratio
3721	3U0>(>) (or Ux)	Voltage Prot.		OFF Alarm Only ON U>Alarm U>>Trip	OFF	Operating mode 3U0 (or Ux) overvoltage
3722	3U0>	Voltage Prot.		1.0 .. 220.0 V	30.0 V	3U0> Pickup (or Ux>)
3723	T 3U0>	Voltage Prot.		0.00 .. 100.00 sec	2.00 sec	T 3U0> Time Delay (or T Ux>)
3724	3U0>>	Voltage Prot.		1.0 .. 220.0 V	50.0 V	3U0>> Pickup (or Ux>>)

Addr.	Parameter	Function	C	Setting Options	Default Setting	Comments
3725	T 3U0>>	Voltage Prot.		0.00 .. 100.00 sec	1.00 sec	T 3U0>> Time Delay (or T Ux>>)
3728A	3U0>(>) Stabil.	Voltage Prot.		ON OFF	ON	3U0>(>): Stabilization 3U0-Measurement
3729A	3U0>(>) RESET	Voltage Prot.		0.30 .. 0.99	0.95	3U0>(>) Reset ratio (or Ux)
3731	U1>(>)	Voltage Prot.		OFF Alarm Only ON U>Alarm U>>Trip	OFF	Operating mode U1 overvoltage prot.
3732	U1>	Voltage Prot.		2.0 .. 220.0 V	150.0 V	U1> Pickup
3733	T U1>	Voltage Prot.		0.00 .. 100.00 sec	2.00 sec	T U1> Time Delay
3734	U1>>	Voltage Prot.		2.0 .. 220.0 V	175.0 V	U1>> Pickup
3735	T U1>>	Voltage Prot.		0.00 .. 100.00 sec	1.00 sec	T U1>> Time Delay
3739A	U1>(>) RESET	Voltage Prot.		0.30 .. 0.99	0.98	U1>(>) Reset ratio
3741	U2>(>)	Voltage Prot.		OFF Alarm Only ON U>Alarm U>>Trip	OFF	Operating mode U2 overvoltage prot.
3742	U2>	Voltage Prot.		2.0 .. 220.0 V	30.0 V	U2> Pickup
3743	T U2>	Voltage Prot.		0.00 .. 100.00 sec	2.00 sec	T U2> Time Delay
3744	U2>>	Voltage Prot.		2.0 .. 220.0 V	50.0 V	U2>> Pickup
3745	T U2>>	Voltage Prot.		0.00 .. 100.00 sec	1.00 sec	T U2>> Time Delay
3749A	U2>(>) RESET	Voltage Prot.		0.30 .. 0.99	0.98	U2>(>) Reset ratio
3751	Uph-e<(<)	Voltage Prot.		OFF Alarm Only ON U<Alarm U<<Trip	OFF	Operating mode Uph-e undervoltage prot.
3752	Uph-e<	Voltage Prot.		1.0 .. 100.0 V	30.0 V	Uph-e< Pickup
3753	T Uph-e<	Voltage Prot.		0.00 .. 100.00 sec	2.00 sec	T Uph-e< Time Delay
3754	Uph-e<<	Voltage Prot.		1.0 .. 100.0 V	10.0 V	Uph-e<< Pickup
3755	T Uph-e<<	Voltage Prot.		0.00 .. 100.00 sec	1.00 sec	T Uph-e<< Time Delay
3758	CURR.SUP. Uphe<	Voltage Prot.		ON OFF	ON	Current supervision (Uph-e)
3759A	Uph-e<(<) RESET	Voltage Prot.		1.01 .. 1.20	1.05	Uph-e<(<) Reset ratio
3761	Uph-ph<(<)	Voltage Prot.		OFF Alarm Only ON U<Alarm U<<Trip	OFF	Operating mode Uph-ph undervoltage prot.
3762	Uph-ph<	Voltage Prot.		1.0 .. 175.0 V	50.0 V	Uph-ph< Pickup
3763	T Uph-ph<	Voltage Prot.		0.00 .. 100.00 sec	2.00 sec	T Uph-ph< Time Delay
3764	Uph-ph<<	Voltage Prot.		1.0 .. 175.0 V	17.0 V	Uph-ph<< Pickup
3765	T Uphph<<	Voltage Prot.		0.00 .. 100.00 sec	1.00 sec	T Uph-ph<< Time Delay
3768	CURR.SUP.Uphph<	Voltage Prot.		ON OFF	ON	Current supervision (Uph-ph)
3769A	Uphph<(<) RESET	Voltage Prot.		1.01 .. 1.20	1.05	Uph-ph<(<) Reset ratio

Addr.	Parameter	Function	C	Setting Options	Default Setting	Comments
3771	U1<(<)	Voltage Prot.		OFF Alarm Only ON U<Alarm U<<Trip	OFF	Operating mode U1 undervoltage prot.
3772	U1<	Voltage Prot.		1.0 .. 100.0 V	30.0 V	U1< Pickup
3773	T U1<	Voltage Prot.		0.00 .. 100.00 sec	2.00 sec	T U1< Time Delay
3774	U1<<	Voltage Prot.		1.0 .. 100.0 V	10.0 V	U1<< Pickup
3775	T U1<<	Voltage Prot.		0.00 .. 100.00 sec	1.00 sec	T U1<< Time Delay
3778	CURR.SUP.U1<	Voltage Prot.		ON OFF	ON	Current supervision (U1)
3779A	U1<(<) RESET	Voltage Prot.		1.01 .. 1.20	1.05	U1<(<) Reset ratio
3901	FCT BreakerFail	Breaker Failure		ON OFF	ON	Breaker Failure Protection
3902	I> BF	Breaker Failure	1A	0.05 .. 20.00 A	0.10 A	Pick-up threshold I>
			5A	0.25 .. 100.00 A	0.50 A	
3903	1p-RETRIP (T1)	Breaker Failure		NO YES	YES	1pole retrip with stage T1 (local trip)
3904	T1-1pole	Breaker Failure		0.00 .. 30.00 sec	0.00 sec	T1, Delay after 1pole start (local trip)
3905	T1-3pole	Breaker Failure		0.00 .. 30.00 sec	0.00 sec	T1, Delay after 3pole start (local trip)
3906	T2	Breaker Failure		0.00 .. 30.00 sec	0.15 sec	T2, Delay of 2nd stage (busbar trip)
3907	T3-BkrDefective	Breaker Failure		0.00 .. 30.00 sec	0.00 sec	T3, Delay for start with defective bkr.
3908	Trip BkrDefect.	Breaker Failure		NO with T1-trip with T2-trip w/ T1/T2-trip	NO	Trip output selection with defective bkr
3909	Chk BRK CONTACT	Breaker Failure		NO YES	YES	Check Breaker contacts
3912	3I0> BF	Breaker Failure	1A	0.05 .. 20.00 A	0.10 A	Pick-up threshold 3I0>
			5A	0.25 .. 100.00 A	0.50 A	
3913	T2StartCriteria	Breaker Failure		With exp. of T1 Parallel withT1	Parallel withT1	T2 Start Criteria
3921	End Flt. stage	Breaker Failure		ON OFF	OFF	End fault protection
3922	T-EndFault	Breaker Failure		0.00 .. 30.00 sec	2.00 sec	Trip delay of end fault protection
3931	PoleDiscrepancy	Breaker Failure		ON OFF	OFF	Pole Discrepancy supervision
3932	T-PoleDiscrep.	Breaker Failure		0.00 .. 30.00 sec	2.00 sec	Trip delay with pole discrepancy
4001	FCT TripSuperv.	TripCirc.Superv		ON OFF	OFF	TRIP Circuit Supervision is
4002	No. of BI	TripCirc.Superv		1 .. 2	2	Number of Binary Inputs per trip circuit
4003	Alarm Delay	TripCirc.Superv		1 .. 30 sec	2 sec	Delay Time for alarm

Addr.	Parameter	Function	C	Setting Options	Default Setting	Comments
201	CT Starpoint	P.System Data 1		towards Line towards Busbar	towards Line	CT Starpoint
203	Unom PRIMARY	P.System Data 1		1.0 .. 1200.0 kV	400.0 kV	Rated Primary Voltage
204	Unom SECONDARY	P.System Data 1		80 .. 125 V	100 V	Rated Secondary Voltage (Ph-Ph)
205	CT PRIMARY	P.System Data 1		10 .. 5000 A	1000 A	CT Rated Primary Current
206	CT SECONDARY	P.System Data 1		1A 5A	1A	CT Rated Secondary Current
207	SystemStarpoint	P.System Data 1		Solid Earthed Peterson-Coil Isolated	Solid Earthed	System Starpoint is
210	U4 transformer	P.System Data 1		Not connected Udelta transf. Usy2 transf. Ux transformer	Not connected	U4 voltage transformer is
211	Uph / Udelta	P.System Data 1		0.10 .. 9.99	1.73	Matching ratio Phase-VT To Open-Delta-VT
212	Usy2 connection	P.System Data 1		L1-E L2-E L3-E L1-L2 L2-L3 L3-L1	L1-L2	VT connection for Usy2
214A	φ Usy2-Usy1	P.System Data 1		0 .. 360 °	0 °	Angle adjustment Usy2-Usy1
215	Usy1/Usy2 ratio	P.System Data 1		0.50 .. 2.00	1.00	Matching ratio Usy1/Usy2
220	I4 transformer	P.System Data 1		Not connected In prot. line	In prot. line	I4 current transformer is
221	I4/Iph CT	P.System Data 1		0.010 .. 5.000	1.000	Matching ratio I4/Iph for CT's
230	Rated Frequency	P.System Data 1		50 Hz 60 Hz	50 Hz	Nominal Frequency
235	PHASE SEQ.	P.System Data 1		L1 L2 L3 L1 L3 L2	L1 L2 L3	Phase Sequence
239	T-CB close	P.System Data 1		0.01 .. 0.60 sec	0.06 sec	Closing (operating) time of CB
240A	TMin TRIP CMD	P.System Data 1		0.02 .. 30.00 sec	0.10 sec	Minimum TRIP Command Duration
241A	TMax CLOSE CMD	P.System Data 1		0.01 .. 30.00 sec	0.10 sec	Maximum Close Command Duration
242	T-CBtest-dead	P.System Data 1		0.00 .. 30.00 sec	0.10 sec	CB test: Dead time

Addr.	Parameter	Function	C	Setting Options	Default Setting	Comments
302	CHANGE	Change Group		Group A Group B Group C Group D Binary Input Protocol	Group A	Activation
402A	WAVEFORM-TRIGGER	Osc. Fault Rec.		Save w. Pickup Save w. TRIP Start w. TRIP	Save w. Pickup	Waveform Capture
403A	WAVEFORM DATA	Osc. Fault Rec.		Fault event Pow.Sys.Flt.	Fault event	Scope of Waveform Data
410	MAX. LENGTH	Osc. Fault Rec.		0.30 .. 5.00 sec	2.00 sec	Max.length per waveform T-max
411	PRE. TRIG. TIME	Osc. Fault Rec.		0.05 .. 0.50 sec	0.25 sec	Captured Waveform Prior to Trigger
412	POST REC. TIME	Osc. Fault Rec.		0.05 .. 0.50 sec	0.10 sec	Captured Waveform after Event
415	BinIn CAPT.TIME	Osc. Fault Rec.		0.10 .. 5.00 sec	0.50 sec	Capture Time via Binary Input
610	FltDisp.LED/LCD	Device		Target on PU Target on TRIP	Target on PU	Fault Display on LED/LCD
625A	T MIN LED HOLD	Device		0 .. 60 min	0 min	Minimum hold time of latched LEDs
640	Start image DD	Device		image 1 image 2 image 3 image 4 image 5 image 6	image 1	Start image Default Display
1103	FullScaleVolt.	P.System Data 2		1.0 .. 1200.0 kV	400.0 kV	Measurement: Full Scale Voltage (100%)
1104	FullScaleCurr.	P.System Data 2		10 .. 5000 A	1000 A	Measurement: Full Scale Current (100%)
1107	P,Q sign	P.System Data 2		not reversed reversed	not reversed	P,Q operational measured values sign
1130A	PoleOpenCurrent	P.System Data 2	1A	0.05 .. 1.00 A	0.10 A	Pole-open current: Detection dead line or bus
			5A	0.25 .. 5.00 A	0.50 A	
1131A	PoleOpenVoltage	P.System Data 2		2 .. 70 V	30 V	PoleOpenVoltage Detection dead line or bus
1135	Reset Trip CMD	P.System Data 2		CurrentOpenPole Current AND CB Pickup Reset	CurrentOpenPole	Trip command control via
1136	OpenPoleDetect.	P.System Data 2		OFF Current AND CB w/ measurement	w/ measurement	Open Pole Detector
1150A	SI Time Man.Cl	P.System Data 2		0.01 .. 30.00 sec	0.30 sec	Seal-in Time after MANUAL closures

Addr.	Parameter	Function	C	Setting Options	Default Setting	Comments
1151	MAN. CLOSE	P.System Data 2		with Sync-check w/o Sync-check NO	NO	Close command with manual close
1152	Man.Clos. Imp.	P.System Data 2		OBJVERWparaMEIN-STELL	none	MANUAL Closure Impulse after CONTROL
2601	Operating Mode	Back-Up O/C		ON OFF	ON	Operating mode
2610	Iph>>	Back-Up O/C	1A	0.05 .. 50.00 A	2.00 A	Iph>>: 5A
			5A	0.25 .. 250.00 A	10.00 A	
2611	T Iph>>	Back-Up O/C		0.00 .. 30.00 sec	0.30 sec	Iph>>: Time delay
2612	3I0>> PICKUP	Back-Up O/C	1A	0.05 .. 25.00 A	0.50 A	3I0>>: 5A
			5A	0.25 .. 125.00 A	2.50 A	
2613	T 3I0>>	Back-Up O/C		0.00 .. 30.00 sec	2.00 sec	3I0>>: Time delay
2614	I>> InstTrip BI	Back-Up O/C		NO YES	YES	Instantaneous trip via Teleprot./BI
2615	I>> SOTF	Back-Up O/C		NO YES	NO	Instantaneous trip after SwitchOnToFault
2620	Iph>	Back-Up O/C	1A	0.05 .. 50.00 A	1.50 A	Iph>: 5A
			5A	0.25 .. 250.00 A	7.50 A	
2621	T Iph>	Back-Up O/C		0.00 .. 30.00 sec	0.50 sec	Iph>: Time delay
2622	3I0>	Back-Up O/C	1A	0.05 .. 25.00 A	0.20 A	3I0>: 5A
			5A	0.25 .. 125.00 A	1.00 A	
2623	T 3I0>	Back-Up O/C		0.00 .. 30.00 sec	2.00 sec	3I0>: Time delay
2624	I> Telep/BI	Back-Up O/C		NO YES	NO	Instantaneous trip via Teleprot./BI
2625	I> SOTF	Back-Up O/C		NO YES	NO	Instantaneous trip after SwitchOnToFault
2630	Iph> STUB	Back-Up O/C	1A	0.05 .. 50.00 A	1.50 A	Iph>>>: 5A
			5A	0.25 .. 250.00 A	7.50 A	
2631	T Iph STUB	Back-Up O/C		0.00 .. 30.00 sec	0.30 sec	Iph>>>: Time delay
2632	3I0> STUB	Back-Up O/C	1A	0.05 .. 25.00 A	0.20 A	3I0>>>: 5A
			5A	0.25 .. 125.00 A	1.00 A	
2633	T 3I0 STUB	Back-Up O/C		0.00 .. 30.00 sec	2.00 sec	3I0>>>: Time delay
2634	I-STUB Telep/BI	Back-Up O/C		NO YES	NO	Instantaneous trip via Teleprot./BI
2635	I-STUB SOTF	Back-Up O/C		NO YES	NO	Instantaneous trip after SwitchOnToFault
2640	Ip>	Back-Up O/C	1A	0.10 .. 4.00 A	2147483647 A	IP: 5A
			5A	0.50 .. 20.00 A	2147483647 A	
2642	T Ip Time Dial	Back-Up O/C		0.05 .. 3.00 sec	0.50 sec	IP: Inst time for IEC characteristics T IP
2643	Time Dial TD Ip	Back-Up O/C		0.50 .. 15.00	5.00	IP: Inst time for ANSI characteristics D IP
2646	T Ip Add	Back-Up O/C		0.00 .. 30.00 sec	0.00 sec	IP: Inst additional delay T IPdelay
2650	3I0p PICKUP	Back-Up O/C	1A	0.05 .. 4.00 A	2147483647 A	3I0P: 5A
			5A	0.25 .. 20.00 A	2147483647 A	

Addr.	Parameter	Function	C	Setting Options	Default Setting	Comments
2652	T 3I0p TimeDial	Back-Up O/C		0.05 .. 3.00 sec	0.50 sec	3I0P: Inst time (IEC characteristics) T 3I0P
2653	TimeDial TD3I0p	Back-Up O/C		0.50 .. 15.00	5.00	3I0P: Inst time (ANSI characteristics) D 3I0P
2656	T 3I0p Add	Back-Up O/C		0.00 .. 30.00 sec	0.00 sec	3I0P: Inst additional delay T 3I0delay
2660	IEC Curve	Back-Up O/C		Normal Inverse Very Inverse Extremely Inv. LongTimeInverse	Normal Inverse	IEC Curve
2661	ANSI Curve	Back-Up O/C		Inverse Short Inverse Long Inverse Moderately Inv. Very Inverse Extremely Inv. Definite Inv.	Inverse	ANSI Curve
2670	I(3I0)p Tele/BI	Back-Up O/C		NO YES	NO	Instantaneous trip via Teleprot./BI
2671	I(3I0)p SOTF	Back-Up O/C		NO YES	NO	Instantaneous trip after SwitchOnToFault
2680	SOTF Time DELAY	Back-Up O/C		0.00 .. 30.00 sec	0.00 sec	Delay time for switching
2901	MEASURE. SUPERV	Meas-urem.Superv		ON OFF	ON	Measurement Supervision
2902A	BALANCE U-LIMIT	Meas-urem.Superv		10 .. 100 V	50 V	Symmetry V: 5A
2903A	BAL. FACTOR U	Meas-urem.Superv		0.58 .. 0.95	0.75	Symmetry V: Slope of the Characteristic Curve
2904A	BALANCE I LIMIT	Meas-urem.Superv	1A	0.10 .. 1.00 A	0.50 A	Symmetry Iph: 5A
			5A	0.50 .. 5.00 A	2.50 A	
2905A	BAL. FACTOR I	Meas-urem.Superv		0.10 .. 0.95	0.50	Symmetry Iph: Slope of the Characteristic Curve
2906A	ΣI THRESHOLD	Meas-urem.Superv	1A	0.05 .. 2.00 A	0.10 A	Sum I: 5A
			5A	0.25 .. 10.00 A	0.50 A	
2907A	ΣI FACTOR	Meas-urem.Superv		0.00 .. 0.95	0.10	Sum I: Slope of the Characteristic Curve
2908A	T BAL. U LIMIT	Meas-urem.Superv		5 .. 100 sec	5 sec	Symmetry Uph: Pickup delay
2909A	T BAL. I LIMIT	Meas-urem.Superv		5 .. 100 sec	5 sec	Symmetry Iph: Pickup delay
2910	FUSE FAIL MON.	Meas-urem.Superv		ON OFF	ON	Operating mode for Fuse Failure Monitor
2911A	FFM U>(min)	Meas-urem.Superv		10 .. 100 V	30 V	Minimum Voltage Threshold V
2912A	FFM I< (max)	Meas-urem.Superv	1A	0.10 .. 1.00 A	0.10 A	Maximum Current Threshold I
			5A	0.50 .. 5.00 A	0.50 A	
2913A	FFM U<max (3ph)	Meas-urem.Superv		2 .. 100 V	15 V	Umess for Current Threshold (3phase)

Addr.	Parameter	Function	C	Setting Options	Default Setting	Comments
2914A	FFM Idelta (3p)	Meas-urem.Superv	1A	0.05 .. 1.00 A	0.10 A	Delta Current Threshold (3phase)
			5A	0.25 .. 5.00 A	0.50 A	
2915	V-Supervision	Meas-urem.Superv		w/ CURR.SUP w/ I> & CBaux OFF	w/ CURR.SUP	Voltage Failure Supervision
2916A	T V-Supervision	Meas-urem.Superv		0.00 .. 30.00 sec	3.00 sec	Delay Voltage Failure Supervision
2941	φA	Meas-urem.Superv		0 .. 359 °	200 °	Limit setting PhiA
2942	φB	Meas-urem.Superv		0 .. 359 °	340 °	Limit setting PhiB
2943	I1>	Meas-urem.Superv	1A	0.05 .. 2.00 A	0.05 A	Minimum value I1>
			5A	0.25 .. 10.00 A	0.25 A	
2944	U1>	Meas-urem.Superv		2 .. 70 V	20 V	Minimum value U1>
3401	AUTO RECLOSE	Autoreclosure		OFF ON	ON	Auto-Reclose function
3402	CB? 1.TRIP	Autoreclosure		YES NO	NO	CB ready interrogation at 1st trip
3403	T-RECLAIM	Autoreclosure		0.50 .. 300.00 sec	3.00 sec	Reclaim time after successful AR cycle
3403	T-RECLAIM	Autoreclosure		0.50 .. 300.00 sec	3.00 sec	Reclaim time after successful AR cycle
3404	T-BLOCK MC	Autoreclosure		0.50 .. 300.00 sec	1.00 sec	AR blocking duration after manual close
3406	EV. FLT. RECOG.	Autoreclosure		with PICKUP with TRIP	with TRIP	Evolving fault recognition
3407	EV. FLT. MODE	Autoreclosure		blocks AR starts 3p AR	starts 3p AR	Evolving fault (during the dead time)
3408	T-Start MONITOR	Autoreclosure		0.01 .. 300.00 sec	0.20 sec	AR start-signal monitoring time
3409	CB TIME OUT	Autoreclosure		0.01 .. 300.00 sec	3.00 sec	Circuit Breaker (CB) Supervision Time
3410	T RemoteClose	Autoreclosure		0.00 .. 300.00 sec	2147483647 sec	Time until ON
3411A	T-DEAD EXT.	Autoreclosure		0.50 .. 300.00 sec	2147483647 sec	Maximum dead time extension
3425	AR w/ BackUpO/C	Autoreclosure		YES NO	YES	AR with back-up overcurrent?
3430	AR TRIP 3pole	Autoreclosure Autoreclosure		YES NO	YES	3-pole trip (CB plausibility)
3431	DLC or RDT	Autoreclosure		WITHOUT RDT DLC	WITHOUT	Dead Line Check or Reduced Dead Time
3433	T-ACTION ADT	Autoreclosure		0.01 .. 300.00 sec	0.20 sec	Action time
3434	T-MAX ADT	Autoreclosure		0.50 .. 3000.00 sec	5.00 sec	Maximum dead time
3435	ADT 1p allowed	Autoreclosure		YES NO	NO	1pole TRIP allowed?
3436	ADT CB? CLOSE	Autoreclosure		YES NO	NO	CB ready interrogation before reclosing

Addr.	Parameter	Function	C	Setting Options	Default Setting	Comments
3437	ADT SynRequest	Autoreclosure		YES NO	NO	Request for synchro-check after 3pole AR
3438	T U-stable	Autoreclosure Autoreclosure		0.10 .. 30.00 sec	0.10 sec	Supervision time for dead/live voltage
3440	U-live>	Autoreclosure Autoreclosure		30 .. 90 V	48 V	Voltage threshold for live line or bus
3441	U-dead<	Autoreclosure Autoreclosure		2 .. 70 V	30 V	Voltage threshold for dead line
3450	1.AR: START	Autoreclosure		YES NO	YES	AR start allowed in this cycle?
3451	1.AR: T-ACTION	Autoreclosure		0.01 .. 300.00 sec	0.20 sec	Action time
3453	1.AR Tdead 1Flt	Autoreclosure		0.01 .. 1800.00 sec	1.20 sec	Dead time after 1phase faults
3454	1.AR Tdead 2Flt	Autoreclosure		0.01 .. 1800.00 sec	1.20 sec	Dead time after 2phase faults
3455	1.AR Tdead 3Flt	Autoreclosure		0.01 .. 1800.00 sec	0.50 sec	Dead time after 3phase faults
3456	1.AR Tdead1Trip	Autoreclosure		0.01 .. 1800.00 sec	1.20 sec	Dead time after 1pole trip
3457	1.AR Tdead3Trip	Autoreclosure		0.01 .. 1800.00 sec	0.50 sec	Dead time after 3pole trip
3458	1.AR: Tdead EV.	Autoreclosure		0.01 .. 1800.00 sec	1.20 sec	Dead time after evolving fault
3459	1.AR: CB? CLOSE	Autoreclosure		YES NO	NO	CB ready interrogation before reclosing
3460	1.AR SynRequest	Autoreclosure		YES NO	NO	Request for synchro-check after 3pole AR
3461	2.AR: START	Autoreclosure		YES NO	NO	AR start allowed in this cycle?
3462	2.AR: T-ACTION	Autoreclosure		0.01 .. 300.00 sec	0.20 sec	Action time
3464	2.AR Tdead 1Flt	Autoreclosure		0.01 .. 1800.00 sec	1.20 sec	Dead time after 1phase faults
3465	2.AR Tdead 2Flt	Autoreclosure		0.01 .. 1800.00 sec	1.20 sec	Dead time after 2phase faults
3466	2.AR Tdead 3Flt	Autoreclosure		0.01 .. 1800.00 sec	0.50 sec	Dead time after 3phase faults
3467	2.AR Tdead1Trip	Autoreclosure		0.01 .. 1800.00 sec	2147483647 sec	Dead time after 1pole trip
3468	2.AR Tdead3Trip	Autoreclosure		0.01 .. 1800.00 sec	0.50 sec	Dead time after 3pole trip
3469	2.AR: Tdead EV.	Autoreclosure		0.01 .. 1800.00 sec	1.20 sec	Dead time after evolving fault
3470	2.AR: CB? CLOSE	Autoreclosure		YES NO	NO	CB ready interrogation before reclosing
3471	2.AR SynRequest	Autoreclosure		YES NO	NO	Request for synchro-check after 3pole AR
3472	3.AR: START	Autoreclosure		YES NO	NO	AR start allowed in this cycle?
3473	3.AR: T-ACTION	Autoreclosure		0.01 .. 300.00 sec	0.20 sec	Action time
3475	3.AR Tdead 1Flt	Autoreclosure		0.01 .. 1800.00 sec	1.20 sec	Dead time after 1phase faults
3476	3.AR Tdead 2Flt	Autoreclosure		0.01 .. 1800.00 sec	1.20 sec	Dead time after 2phase faults

Addr.	Parameter	Function	C	Setting Options	Default Setting	Comments
3477	3.AR Tdead 3Flt	Autoreclosure		0.01 .. 1800.00 sec	0.50 sec	Dead time after 3phase faults
3478	3.AR Tdead1Trip	Autoreclosure		0.01 .. 1800.00 sec	2147483647 sec	Dead time after 1pole trip
3479	3.AR Tdead3Trip	Autoreclosure		0.01 .. 1800.00 sec	0.50 sec	Dead time after 3pole trip
3480	3.AR: Tdead EV.	Autoreclosure		0.01 .. 1800.00 sec	1.20 sec	Dead time after evolving fault
3481	3.AR: CB? CLOSE	Autoreclosure		YES NO	NO	CB ready interrogation before reclosing
3482	3.AR SynRequest	Autoreclosure		YES NO	NO	Request for synchro-check after 3pole AR
3483	4.AR: START	Autoreclosure		YES NO	NO	AR start allowed in this cycle
3484	4.AR: T-ACTION	Autoreclosure		0.01 .. 300.00 sec	0.20 sec	Action time
3486	4.AR Tdead 1Flt	Autoreclosure		0.01 .. 1800.00 sec	1.20 sec	Dead time after 1phase faults
3487	4.AR Tdead 2Flt	Autoreclosure		0.01 .. 1800.00 sec	1.20 sec	Dead time after 2phase faults
3488	4.AR Tdead 3Flt	Autoreclosure		0.01 .. 1800.00 sec	0.50 sec	Dead time after 3phase faults
3489	4.AR Tdead1Trip	Autoreclosure		0.01 .. 1800.00 sec	2147483647 sec	Dead time after 1pole trip
3490	4.AR Tdead3Trip	Autoreclosure		0.01 .. 1800.00 sec	0.50 sec	Dead time after 3pole trip
3491	4.AR: Tdead EV.	Autoreclosure		0.01 .. 1800.00 sec	1.20 sec	Dead time after evolving fault
3492	4.AR: CB? CLOSE	Autoreclosure		YES NO	NO	CB ready interrogation before reclosing
3493	4.AR SynRequest	Autoreclosure		YES NO	NO	Request for synchro-check after 3pole AR
3501	FCT Synchronism	Sync. Check		ON OFF ON:w/o CloseCmd	ON	Synchronism check
3502	Dead Volt. Thr.	Sync. Check		1 .. 100 V	5 V	V< (line or busbar are disconnected)
3503	Live Volt. Thr.	Sync. Check		20 .. 125 V	90 V	V< (line or busbar are switched on)
3504	Umax	Sync. Check		20 .. 140 V	110 V	Maximum permissible voltage
3507	T-SYN. DURATION	Sync. Check		0.01 .. 600.00 sec	1.00 sec	Maximum duration of synchronism-check
3508	T SYNC-STAB	Sync. Check		0.00 .. 30.00 sec	0.00 sec	Enable delay for synchro-nous systems
3509	SyncCB	Sync. Check		OBJVERWparaMEIN-STELL	none	Synchronizable circuit breaker
3510	Op.mode with AR	Sync. Check		with T-CB close w/o T-CB close	w/o T-CB close	Operating mode with AR
3511	AR maxVolt.Diff	Sync. Check		1.0 .. 60.0 V	2.0 V	Maximum voltage differ-ence
3512	AR maxFreq.Diff	Sync. Check		0.03 .. 2.00 Hz	0.10 Hz	Maximum frequency difference
3513	AR maxAngleDiff	Sync. Check		2 .. 80 °	10 °	Maximum angle differ-ence

Addr.	Parameter	Function	C	Setting Options	Default Setting	Comments
3515A	AR SYNC-CHECK	Sync. Check		YES NO	YES	AR closing at Usy2>, Usy1> and synchr
3516	AR Usy1<Usy2>	Sync. Check		YES NO	NO	AR: Closing at Usy1< and Usy2>
3517	AR Usy1>Usy2<	Sync. Check		YES NO	NO	AR: Closing at Usy1> and Usy2<
3518	AR Usy1<Usy2<	Sync. Check		YES NO	NO	AR: Closing at Usy1< and Usy2<
3519	AR OVERRIDE	Sync. Check		YES NO	NO	Override of any check before AR
3530	Op.mode with MC	Sync. Check		with T-CB close w/o T-CB close	w/o T-CB close	Operating mode with Man.Cl.
3531	MC maxVolt.Diff	Sync. Check		1.0 .. 60.0 V	2.0 V	Maximum voltage difference
3532	MC maxFreq.Diff	Sync. Check		0.03 .. 2.00 Hz	0.10 Hz	Maximum frequency difference
3533	MC maxAngleDiff	Sync. Check		2 .. 80 °	10 °	Maximum angle difference
3535A	MC SYNCHR	Sync. Check		YES NO	YES	HE: Closing at Usy2>, Usy1> and synchr
3536	MC Usy1< Usy2>	Sync. Check		YES NO	NO	HE: Closing at Usy1< and Usy2>
3537	MC Usy1> Usy2<	Sync. Check		YES NO	NO	HE:Closing at Usy1> and Usy2<
3538	MC Usy1< Usy2<	Sync. Check		YES NO	NO	HE: Closing at Usy1< and Usy2<
3539	MC OVERRIDE	Sync. Check		YES NO	NO	Override of any check before AR
3701	Uph-e>(>)	Voltage Prot.		OFF Alarm Only ON U>Alarm U>>Trip	OFF	Operating mode Ph-E overvoltage prot.
3702	Uph-e>	Voltage Prot.		1.0 .. 170.0 V	85.0 V	Uph>: 5A
3703	T Uph-e>	Voltage Prot.		0.00 .. 100.00 sec	2.00 sec	Uph>: Time delay
3704	Uph-e>>	Voltage Prot.		1.0 .. 170.0 V	100.0 V	Uph>>: 5A
3705	T Uph-e>>	Voltage Prot.		0.00 .. 100.00 sec	1.00 sec	Uph>>: Time delay
3709A	Uph-e>(>) RESET	Voltage Prot.		0.30 .. 0.99	0.98	Uph>(>): Dropout to pickup ratio
3711	Uph-ph>(>)	Voltage Prot.		OFF Alarm Only ON U>Alarm U>>Trip	OFF	Operating mode Uph-ph overvoltage prot.
3712	Uph-ph>	Voltage Prot.		2.0 .. 220.0 V	150.0 V	Uphph>: 5A
3713	T Uph-ph>	Voltage Prot.		0.00 .. 100.00 sec	2.00 sec	Uphph>: Time delay
3714	Uph-ph>>	Voltage Prot.		2.0 .. 220.0 V	175.0 V	Uphph>>: 5A
3715	T Uph-ph>>	Voltage Prot.		0.00 .. 100.00 sec	1.00 sec	Uphph>>: Time delay
3719A	Uphph>(>) RESET	Voltage Prot.		0.30 .. 0.99	0.98	Uphph>(>): Dropout to pickup ratio

Addr.	Parameter	Function	C	Setting Options	Default Setting	Comments
3721	3U0>(>) (or Ux)	Voltage Prot.		OFF Alarm Only ON U>Alarm U>>Trip	OFF	Operating mode 3U0 (or Ux) overvoltage
3722	3U0>	Voltage Prot.		1.0 .. 220.0 V	30.0 V	3U0>: Pickup value (or Ux>)
3723	T 3U0>	Voltage Prot.		0.00 .. 100.00 sec	2.00 sec	3U0>: Time delay (or Ux>)
3724	3U0>>	Voltage Prot.		1.0 .. 220.0 V	50.0 V	3U0>>: Pickup value (or Ux>>)
3725	T 3U0>>	Voltage Prot.		0.00 .. 100.00 sec	1.00 sec	3U0>>: Time delay (or Ux>>)
3728A	3U0>(>) Stabil.	Voltage Prot.		ON OFF	ON	3U0>(>): Stabilization 3U0-Measurement
3729A	3U0>(>) RESET	Voltage Prot.		0.30 .. 0.99	0.95	3U0>(>): Resetting ratio (or Ux)
3731	U1>(>)	Voltage Prot.		OFF Alarm Only ON U>Alarm U>>Trip	OFF	Operating mode U1 overvoltage prot.
3732	U1>	Voltage Prot.		2.0 .. 220.0 V	150.0 V	V1>: 5A
3733	T U1>	Voltage Prot.		0.00 .. 100.00 sec	2.00 sec	V1>: Time delay
3734	U1>>	Voltage Prot.		2.0 .. 220.0 V	175.0 V	V1>>: 5A
3735	T U1>>	Voltage Prot.		0.00 .. 100.00 sec	1.00 sec	V1>>: Time delay
3739A	U1>(>) RESET	Voltage Prot.		0.30 .. 0.99	0.98	V1>(>): Dropout to pickup ratio
3741	U2>(>)	Voltage Prot.		OFF Alarm Only ON U>Alarm U>>Trip	OFF	Operating mode U2 overvoltage prot.
3742	U2>	Voltage Prot.		2.0 .. 220.0 V	30.0 V	V2> 5A
3743	T U2>	Voltage Prot.		0.00 .. 100.00 sec	2.00 sec	V2> Time delay
3744	U2>>	Voltage Prot.		2.0 .. 220.0 V	50.0 V	V2>>: 5A
3745	T U2>>	Voltage Prot.		0.00 .. 100.00 sec	1.00 sec	V2>>: Time delay
3749A	U2>(>) RESET	Voltage Prot.		0.30 .. 0.99	0.98	V2>(>): Dropout to pickup ratio
3751	Uph-e<(<)	Voltage Prot.		OFF Alarm Only ON U<Alarm U<<Trip	OFF	Operating mode Ph-E undervoltage prot.
3752	Uph-e<	Voltage Prot.		1.0 .. 100.0 V	30.0 V	Uph<: 5A
3753	T Uph-e<	Voltage Prot.		0.00 .. 100.00 sec	2.00 sec	Uph<: Time delay
3754	Uph-e<<	Voltage Prot.		1.0 .. 100.0 V	10.0 V	Uph<<: 5A
3755	T Uph-e<<	Voltage Prot.		0.00 .. 100.00 sec	1.00 sec	Uph<<: Time delay
3758	CURR.SUP. Uphe<	Voltage Prot.		ON OFF	ON	Uph<(<): Current criterion
3759A	Uph-e<(<) RESET	Voltage Prot.		1.01 .. 1.20	1.05	Uph<(<): Dropout to pickup ratio

Addr.	Parameter	Function	C	Setting Options	Default Setting	Comments
3761	Uph-ph<(<)	Voltage Prot.		OFF Alarm Only ON U<Alarm U<<Trip	OFF	Operating mode Uph-ph undervoltage prot.
3762	Uph-ph<	Voltage Prot.		1.0 .. 175.0 V	50.0 V	Uphph<: 5A
3763	T Uph-ph<	Voltage Prot.		0.00 .. 100.00 sec	2.00 sec	Uphph<: Time delay
3764	Uph-ph<<	Voltage Prot.		1.0 .. 175.0 V	17.0 V	Uphph<<: 5A
3765	T Uphph<<	Voltage Prot.		0.00 .. 100.00 sec	1.00 sec	Uphph<<: Time delay
3768	CURR.SUP.Uphph<	Voltage Prot.		ON OFF	ON	Uphph<(<): Current criterion
3769A	Uphph<(<) RESET	Voltage Prot.		1.01 .. 1.20	1.05	Uphph<(<): Dropout to pickup ratio
3771	U1<(<)	Voltage Prot.		OFF Alarm Only ON U<Alarm U<<Trip	OFF	Operating mode U1 undervoltage prot.
3772	U1<	Voltage Prot.		1.0 .. 100.0 V	30.0 V	V1<: 5A
3773	T U1<	Voltage Prot.		0.00 .. 100.00 sec	2.00 sec	V1<: Time delay
3774	U1<<	Voltage Prot.		1.0 .. 100.0 V	10.0 V	V1<<: 5A
3775	T U1<<	Voltage Prot.		0.00 .. 100.00 sec	1.00 sec	V1<<: Time delay
3778	CURR.SUP.U1<	Voltage Prot.		ON OFF	ON	V1<(<): Current criterion
3779A	U1<(<) RESET	Voltage Prot.		1.01 .. 1.20	1.05	V1<(<): Dropout to pickup ratio
3901	FCT BreakerFail	Breaker Failure		ON OFF	ON	Breaker Failure Protection
3902	I> BF	Breaker Failure	1A	0.05 .. 20.00 A	0.10 A	Pick-up threshold I
			5A	0.25 .. 100.00 A	0.50 A	
3903	1p-RETRIP (T1)	Breaker Failure		NO YES	YES	1pole retrip with stage T1 (local trip)
3904	T1-1pole	Breaker Failure		0.00 .. 30.00 sec	0.00 sec	T1, Delay after 1pole start (local trip)
3905	T1-3pole	Breaker Failure		0.00 .. 30.00 sec	0.00 sec	T1, Delay after 3pole start (local trip)
3906	T2	Breaker Failure		0.00 .. 30.00 sec	0.15 sec	T2, Delay of 2nd stage (busbar trip)
3907	T3-BkrDefective	Breaker Failure		0.00 .. 30.00 sec	0.00 sec	T3, Delay for start with defective bkr.
3908	Trip BkrDefect.	Breaker Failure		NO with T1-trip with T2-trip w/ T1/T2-trip	NO	Trip output selection with defective bkr
3909	Chk BRK CONTACT	Breaker Failure		NO YES	YES	Automatic CB auxiliary contact evaluation
3912	3I0> BF	Breaker Failure	1A	0.05 .. 20.00 A	0.10 A	Pick-up value of the 3I0 monitoring
			5A	0.25 .. 100.00 A	0.50 A	
3913	T2StartCriteria	Breaker Failure		With exp. of T1 Parallel withT1	Parallel withT1	T2 Start Criteria

Addr.	Parameter	Function	C	Setting Options	Default Setting	Comments
3921	End Flt. stage	Breaker Failure		ON OFF	OFF	End fault protection
3922	T-EndFault	Breaker Failure		0.00 .. 30.00 sec	2.00 sec	Trip delay of end fault protection
3931	PoleDiscrepancy	Breaker Failure		ON OFF	OFF	Pole Discrepancy supervision
3932	T-PoleDiscrep.	Breaker Failure		0.00 .. 30.00 sec	2.00 sec	Trip delay with pole discrepancy
4001	FCT TripSuperv.	TripCirc.Superv		ON OFF	OFF	TRIP Circuit Supervision is
4002	No. of BI	TripCirc.Superv		1 .. 2	2	Number of Binary Inputs per trip circuit
4003	Alarm Delay	TripCirc.Superv		1 .. 30 sec	2 sec	Delay Time for alarm

E.3 Information List

Indications for IEC60870-5-103 are always reported ON / OFF if they are subject to general interrogation for IEC60870-5-103. If not, they are reported only as ON.

New user-defined indications or such newly allocated to IEC 60 870-5-103 are set to ON/OFF and subjected to general interrogation if the information type is not a spontaneous event (".._Ev"). Further information on indications can be found in detail in the SIPROTEC 4 System Description, Order No. E50417-H1100-C151.

In columns "Event Log", "Trip Log" and"Ground Fault Log" the following applies:

UPPER CASE NOTATION ON/OFF:	definitely set, not allocatable
lower case notation "on/off":	preset, allocatable
*:	not preset, allocatable
<blank>:	neither preset nor allocatable

In column "Marked in Oscill.Record" the following applies:

UPPER CASE NOTATION M:	definitely set, not allocatable
lower case notation M:	preset, allocatable
*:	not preset, allocatable
<blank>:	neither preset nor allocatable

No.	Description	Function	Type of Information	Log Buffers				Configurable in Matrix					IEC 60870-5-103			
				Event Log ON/OFF	Trip (Fault) Log ON/OFF	Ground Fault Log ON/OFF	Marked in Oscill. Record	LED	Binary Input	Function Key	Relay	Chatter Suppression	Type	information number	Data Unit	General Interrogation
-	Test mode (Test mode)	Device	IntSP	ON OFF	*		*	LED			BO		94	21	1	Yes
-	Stop data transmission (DataStop)	Device	IntSP	ON OFF	*		*	LED			BO		94	20	1	Yes
-	Unlock data transmission via BI (UnlockDT)	Device	IntSP	*	*		*									
-	Reset LED (Reset LED)	Device	IntSP	ON	*		*	LED			BO		94	19	1	No
-	Clock Synchronization (SynchClock)	Device	IntSP_Ev	*	*		*	LED			BO					
-	>Back Light on (>Light on)	Device	SP	ON OFF	*		*		BI							
-	Hardware Test Mode (HWTestMod)	Device	IntSP	ON OFF	*		*	LED			BO					

No.	Description	Function	Type of Information	Log Buffers				Configurable in Matrix					IEC 60870-5-103			
				Event Log ON/OFF	Trip (Fault) Log ON/OFF	Ground Fault Log ON/OFF	Marked in Oscill. Record	LED	Binary Input	Function Key	Relay	Chatter Suppression	Type	information number	Data Unit	General Interrogation
-	Error FMS FO 1 (Error FMS1)	Device	OUT	ON OFF	*	*	*	LED			BO					
-	Error FMS FO 2 (Error FMS2)	Device	OUT	ON OFF	*	*	*	LED			BO					
-	Disturbance CFC (Distur.CFC)	Device	OUT	On Off	*			LED			BO					
-	Setting Group A is active (P-GrpA act)	Change Group	IntSP	ON OFF	*		*	LED			BO		94	23	1	Yes
-	Setting Group B is active (P-GrpB act)	Change Group	IntSP	ON OFF	*		*	LED			BO		94	24	1	Yes
-	Setting Group C is active (P-GrpC act)	Change Group	IntSP	ON OFF	*		*	LED			BO		94	25	1	Yes
-	Setting Group D is active (P-GrpD act)	Change Group	IntSP	ON OFF	*		*	LED			BO		94	26	1	Yes
-	Fault Recording Start (FltRecSta)	Osc. Fault Rec.	IntSP	On Off	*		m	LED			BO					
-	CB1-TEST trip/close - Only L1 (CB1tst L1)	Testing	-	*	*											
-	CB1-TEST trip/close - Only L2 (CB1tst L2)	Testing	-	*	*											
-	CB1-TEST trip/close - Only L3 (CB1tst L3)	Testing	-	*	*											
-	CB1-TEST trip/close Phases L123 (CB1tst 123)	Testing	-	*	*											
-	Controlmode REMOTE (ModeREMOTE)	Cntrl Authority	IntSP	On Off	*			LED			BO					
-	Control Authority (Cntrl Auth)	Cntrl Authority	IntSP	On Off	*			LED			BO		101	85	1	Yes

No.	Description	Function	Type of Information	Log Buffers				Configurable in Matrix					IEC 60870-5-103			
				Event Log ON/OFF	Trip (Fault) Log ON/OFF	Ground Fault Log ON/OFF	Marked in Oscill. Record	LED	Binary Input	Function Key	Relay	Chatter Suppression	Type	information number	Data Unit	General Interrogation
-	Controlmode LOCAL (ModeLOCAL)	Cntrl Authority	IntSP	On Off	*			LED			BO		101	86	1	Yes
-	Breaker (Breaker)	Control Device	CF_D12	On Off	*						BO		240	160	20	
-	Breaker (Breaker)	Control Device	DP	On Off	*				BI			CB	240	160	1	Yes
-	Disconnect Switch (Disc.Swit.)	Control Device	CF_D2	On Off	*						BO		240	161	20	
-	Disconnect Switch (Disc.Swit.)	Control Device	DP	On Off	*				BI			CB	240	161	1	Yes
-	Earth Switch (EarthSwit)	Control Device	CF_D2	On Off	*						BO		240	164	20	
-	Earth Switch (EarthSwit)	Control Device	DP	On Off	*				BI			CB	240	164	1	Yes
-	Interlocking: Breaker Open (Brk Open)	Control Device	IntSP	*	*		*									
-	Interlocking: Breaker Close (Brk Close)	Control Device	IntSP	*	*		*									
-	Interlocking: Disconnect switch Open (Disc.Open)	Control Device	IntSP	*	*		*									
-	Interlocking: Disconnect switch Close (Disc.Close)	Control Device	IntSP	*	*		*									
-	Interlocking: Earth switch Open (E Sw Open)	Control Device	IntSP	*	*		*									
-	Interlocking: Earth switch Close (E Sw Cl.)	Control Device	IntSP	*	*		*									
-	Q2 Open/Close (Q2 Op/Cl)	Control Device	CF_D2	On Off	*						BO		240	162	20	
-	Q2 Open/Close (Q2 Op/Cl)	Control Device	DP	On Off	*				BI			CB	240	162	1	Yes
-	Q9 Open/Close (Q9 Op/Cl)	Control Device	CF_D2	On Off	*						BO		240	163	20	

No.	Description	Function	Type of Information	Log Buffers				Configurable in Matrix					IEC 60870-5-103			
				Event Log ON/OFF	Trip (Fault) Log ON/OFF	Ground Fault Log ON/OFF	Marked in Oscill. Record	LED	Binary Input	Function Key	Relay	Chatter Suppression	Type	information number	Data Unit	General Interrogation
-	Q9 Open/Close (Q9 Op/Cl)	Control Device	DP	On Off	*				BI			CB	240	163	1	Yes
-	Fan ON/OFF (Fan ON/ OFF)	Control Device	CF_ D2	On Off	*						BO		240	175	20	
-	Fan ON/OFF (Fan ON/ OFF)	Control Device	DP	On Off	*				BI			CB	240	175	1	Yes
-	>Cabinet door open (>Door open)	Process Data	SP	On Off	*		*	LED	BI		BO	CB				
-	>CB waiting for Spring charged (>CB wait)	Process Data	SP	On Off	*		*	LED	BI		BO	CB				
-	>Error Motor Voltage (>Err Mot U)	Process Data	SP	On Off	*		*	LED	BI		BO	CB				
-	>Error Control Voltage (>ErrCntrlU)	Process Data	SP	On Off	*		*	LED	BI		BO	CB				
-	>SF6-Loss (>SF6-Loss)	Process Data	SP	On Off	*		*	LED	BI		BO	CB				
-	>Error Meter (>Err Meter)	Process Data	SP	On Off	*		*	LED	BI		BO	CB				
-	>Transformer Tempera- ture (>Tx Temp.)	Process Data	SP	On Off	*		*	LED	BI		BO	CB				
-	>Transformer Danger (>Tx Danger)	Process Data	SP	On Off	*		*	LED	BI		BO	CB				
-	Reset meter (Meter res)	Energy	IntSP_Ev	ON	*											
-	Error Systeminterface (SysIntErr.)	Protocol	IntSP	On Off	*			LED			BO					
-	Threshold Value 1 (ThreshVal1)	Thresh.- Switch	IntSP	ON OFF	*		*	LED	BI	FKTONLINE	BO	CB				

No.	Description	Function	Type of Information	Log Buffers				Configurable in Matrix					IEC 60870-5-103			
				Event Log ON/OFF	Trip (Fault) Log ON/OFF	Ground Fault Log ON/OFF	Marked in Oscill. Record	LED	Binary Input	Function Key	Relay	Chatter Suppression	Type	information number	Data Unit	General Interrogation
1	No Function configured (Not configured)	Device	SP													
2	Function Not Available (Non Existent)	Device	SP													
3	>Synchronize Internal Real Time Clock (>Time Synch)	Device	SP	*	*		*	LED	BI		BO					
4	>Trigger Waveform Capture (>Trig.Wave.Cap.)	Osc. Fault Rec.	SP	On	*		m	LED	BI		BO					
5	>Reset LED (>Reset LED)	Device	SP	*	*		*	LED	BI		BO					
7	>Setting Group Select Bit 0 (>Set Group Bit0)	Change Group	SP	*	*		*	LED	BI		BO					
8	>Setting Group Select Bit 1 (>Set Group Bit1)	Change Group	SP	*	*		*	LED	BI		BO					
009.0100	Failure EN100 Modul (Failure Modul)	EN100-Modul 1	IntSP	On Off			*	LED			BO					
009.0101	Failure EN100 Link Channel 1 (Ch1) (Fail Ch1)	EN100-Modul 1	IntSP	On Off			*	LED			BO					
009.0102	Failure EN100 Link Channel 2 (Ch2) (Fail Ch2)	EN100-Modul 1	IntSP	On Off			*	LED			BO					
11	>User defined annunciation 1 (>Annunc. 1)	Device	SP	*	*	*	*	LED	BI		BO		94	27	1	Yes
12	>User defined annunciation 2 (>Annunc. 2)	Device	SP	*	*	*	*	LED	BI		BO		94	28	1	Yes
13	>User defined annunciation 3 (>Annunc. 3)	Device	SP	*	*	*	*	LED	BI		BO		94	29	1	Yes
14	>User defined annunciation 4 (>Annunc. 4)	Device	SP	*	*	*	*	LED	BI		BO		94	30	1	Yes
15	>Test mode (>Test mode)	Device	SP	ON OFF	*		*	LED	BI		BO		135	53	1	Yes
16	>Stop data transmission (>DataStop)	Device	SP	*	*		*	LED	BI		BO		135	54	1	Yes
51	Device is Operational and Protecting (Device OK)	Device	OUT	ON OFF	*		*	LED			BO		135	81	1	Yes

No.	Description	Function	Type of Information	Log Buffers				Configurable in Matrix					IEC 60870-5-103			
				Event Log ON/OFF	Trip (Fault) Log ON/OFF	Ground Fault Log ON/OFF	Marked in Oscill. Record	LED	Binary Input	Function Key	Relay	Chatter Suppression	Type	information number	Data Unit	General Interrogation
52	At Least 1 Protection Funct. is Active (ProtActive)	Device	IntSP	ON OFF	*		*	LED			BO		94	18	1	Yes
55	Reset Device (Reset Device)	Device	OUT	*	*		*	LED			BO		94	4	1	No
56	Initial Start of Device (Initial Start)	Device	OUT	ON	*		*	LED			BO		94	5	1	No
67	Resume (Resume)	Device	OUT	ON	*		*	LED			BO		135	97	1	No
68	Clock Synchronization Error (Clock SyncError)	Device	OUT	On Off	*		*	LED			BO					
69	Daylight Saving Time (DayLightSavTime)	Device	OUT	ON OFF	*		*	LED			BO					
70	Setting calculation is running (Settings Calc.)	Device	OUT	ON OFF	*		*	LED			BO		94	22	1	Yes
71	Settings Check (Settings Check)	Device	OUT	*	*		*	LED			BO					
72	Level-2 change (Level-2 change)	Device	OUT	ON OFF	*		*	LED			BO					
73	Local setting change (Local change)	Device	OUT	*	*		*									
110	Event lost (Event Lost)	Device	OUT_Ev	ON	*		*	LED			BO		135	130	1	No
113	Flag Lost (Flag Lost)	Device	OUT	ON	*		m	LED			BO		135	136	1	Yes
125	Chatter ON (Chatter ON)	Device	OUT	ON OFF	*		*	LED			BO		135	145	1	Yes
126	Protection ON/OFF (via system port) (ProtON/OFF)	Device	IntSP	ON OFF	*		*	LED			BO					

No.	Description	Function	Type of Information	Log Buffers				Configurable in Matrix					IEC 60870-5-103			
				Event Log ON/OFF	Trip (Fault) Log ON/OFF	Ground Fault Log ON/OFF	Marked in Oscill. Record	LED	Binary Input	Function Key	Relay	Chatter Suppression	Type	information number	Data Unit	General Interrogation
127	Auto Reclose ON/OFF (via system port) (AR ON/OFF)	Device	IntSP	ON OFF	*		*	LED			BO					
130	Load angle Phi(PQ Positive sequence) (φ(PQ Pos. Seq.))	Measurem.Superv	OUT	*	*		*	LED			BO					
131	Load angle Phi(PQ) blocked (φ(PQ Pos) block)	Measurem.Superv	OUT	*	*		*	LED			BO					
132	Setting error: |PhiA - PhiB| < 3° (φ Set wrong)	Measurem.Superv	OUT	*	*		*	LED			BO					
140	Error with a summary alarm (Error Sum Alarm)	Device	OUT	ON OFF	*		*	LED			BO		94	47	1	Yes
144	Error 5V (Error 5V)	Device	OUT	ON OFF	*		*	LED			BO		135	164	1	Yes
160	Alarm Summary Event (Alarm Sum Event)	Device	OUT	*	*		*	LED			BO		94	46	1	Yes
161	Failure: General Current Supervision (Fail I Superv.)	Measurem.Superv	OUT	*	*		*	LED			BO		94	32	1	Yes
162	Failure: Current Summation (Failure Σ I)	Measurem.Superv	OUT	ON OFF	*		*	LED			BO		135	182	1	Yes
163	Failure: Current Balance (Fail I balance)	Measurem.Superv	OUT	ON OFF	*		*	LED			BO		135	183	1	Yes
164	Failure: General Voltage Supervision (Fail U Superv.)	Measurem.Superv	OUT	*	*		*	LED			BO		94	33	1	Yes
165	Failure: Voltage summation Phase-Earth (Fail Σ U Ph-E)	Measurem.Superv	OUT	ON OFF	*		*	LED			BO		135	184	1	Yes
167	Failure: Voltage Balance (Fail U balance)	Measurem.Superv	OUT	ON OFF	*		*	LED			BO		135	186	1	Yes

No.	Description	Function	Type of Information	Log Buffers				Configurable in Matrix					IEC 60870-5-103			
				Event Log ON/OFF	Trip (Fault) Log ON/OFF	Ground Fault Log ON/OFF	Marked in Oscill. Record	LED	Binary Input	Function Key	Relay	Chatter Suppression	Type	information number	Data Unit	General Interrogation
168	Failure: Voltage absent (Fail U absent)	Meas-urem.Superv	OUT	ON OFF	*		*	LED			BO		135	187	1	Yes
169	VT Fuse Failure (alarm >10s) (VT FuseFail>10s)	Meas-urem.Superv	OUT	ON OFF	*		*	LED			BO		135	188	1	Yes
170	VT Fuse Failure (alarm instantaneous) (VT Fuse-Fail)	Meas-urem.Superv	OUT	ON OFF	*		*	LED			BO					
171	Failure: Phase Sequence (Fail Ph. Seq.)	Meas-urem.Superv	OUT	ON OFF	*		*	LED			BO		94	35	1	Yes
177	Failure: Battery empty (Fail Battery)	Device	OUT	ON OFF	*		*	LED			BO		135	193	1	Yes
181	Error: A/D converter (Error A/D-conv.)	Device	OUT	ON OFF	*		*	LED			BO		135	178	1	Yes
183	Error Board 1 (Error Board 1)	Device	OUT	ON OFF	*		*	LED			BO		135	171	1	Yes
184	Error Board 2 (Error Board 2)	Device	OUT	ON OFF	*		*	LED			BO		135	172	1	Yes
185	Error Board 3 (Error Board 3)	Device	OUT	ON OFF	*		*	LED			BO		135	173	1	Yes
186	Error Board 4 (Error Board 4)	Device	OUT	ON OFF	*		*	LED			BO		135	174	1	Yes
187	Error Board 5 (Error Board 5)	Device	OUT	ON OFF	*		*	LED			BO		135	175	1	Yes

No.	Description	Function	Type of Information	Log Buffers				Configurable in Matrix					IEC 60870-5-103			
				Event Log ON/OFF	Trip (Fault) Log ON/OFF	Ground Fault Log ON/OFF	Marked in Oscill. Record	LED	Binary Input	Function Key	Relay	Chatter Suppression	Type	information number	Data Unit	General Interrogation
188	Error Board 6 (Error Board 6)	Device	OUT	ON OFF	*		*	LED			BO		135	176	1	Yes
189	Error Board 7 (Error Board 7)	Device	OUT	ON OFF	*		*	LED			BO		135	177	1	Yes
190	Error Board 0 (Error Board 0)	Device	OUT	ON OFF	*		*	LED			BO		135	210	1	Yes
191	Error: Offset (Error Offset)	Device	OUT	ON OFF	*		*	LED			BO					
192	Error:1A/5Ajumper different from setting (Error1A/5Awrong)	Device	OUT	ON OFF	*		*	LED			BO		135	169	1	Yes
193	Alarm: Analog input adjustment invalid (Alarm adjustm.)	Device	OUT	ON OFF	*		*	LED			BO		135	181	1	Yes
194	Error: Neutral CT different from MLFB (Error neutralCT)	Device	OUT	ON OFF	*		*	LED			BO		135	180	1	Yes
195	Failure: Broken Conductor (Fail Conductor)	Meas-urem.Superv	OUT	ON OFF	*		*	LED			BO		135	195	1	Yes
196	Fuse Fail Monitor is switched OFF (Fuse Fail M.OFF)	Meas-urem.Superv	OUT	ON OFF	*		*	LED			BO		135	196	1	Yes
197	Measurement Supervision is switched OFF (MeasSup OFF)	Meas-urem.Superv	OUT	ON OFF	*		*	LED			BO		135	197	1	Yes
234.2100	U<, U> blocked via operation (U<, U> blk)	Voltage Prot.	IntSP	On Off	*		*	LED			BO					

No.	Description	Function	Type of Information	Log Buffers				Configurable in Matrix					IEC 60870-5-103			
				Event Log ON/OFF	Trip (Fault) Log ON/OFF	Ground Fault Log ON/OFF	Marked in Oscill. Record	LED	Binary Input	Function Key	Relay	Chatter Suppression	Type	information number	Data Unit	General Interrogation
301	Power System fault (Pow.Sys.Flt.)	P.System Data 2	OUT	ON OFF	ON		*						135	231	2	Yes
302	Fault Event (Fault Event)	P.System Data 2	OUT	*	ON		*						135	232	2	No
320	Warn: Limit of Memory Data exceeded (Warn Mem. Data)	Device	OUT	On Off	*		*	LED			BO					
321	Warn: Limit of Memory Parameter exceeded (Warn Mem. Para.)	Device	OUT	On Off	*		*	LED			BO					
322	Warn: Limit of Memory Operation exceeded (Warn Mem. Oper.)	Device	OUT	On Off	*		*	LED			BO					
323	Warn: Limit of Memory New exceeded (Warn Mem. New)	Device	OUT	On Off	*		*	LED			BO					
351	>Circuit breaker aux. contact: Pole L1 (>CB Aux. L1)	P.System Data 2	SP	*	*		m	LED	BI		BO		150	1	1	Yes
352	>Circuit breaker aux. contact: Pole L2 (>CB Aux. L2)	P.System Data 2	SP	*	*		m	LED	BI		BO		150	2	1	Yes
353	>Circuit breaker aux. contact: Pole L3 (>CB Aux. L3)	P.System Data 2	SP	*	*		m	LED	BI		BO		150	3	1	Yes
356	>Manual close signal (>Manual Close)	P.System Data 2	SP	*	*		*	LED	BI		BO		150	6	1	Yes
357	>Block manual close cmd. from external (>Blk Man. Close)	P.System Data 2	SP	ON OFF	*		*	LED	BI		BO		150	7	1	Yes
361	>Failure: Feeder VT (MCB tripped) (>FAIL:Feeder VT)	P.System Data 2	SP	ON OFF	*		*	LED	BI		BO		94	38	1	Yes
362	>Failure: Usy4 VT (MCB tripped) (>FAIL:U4 VT)	P.System Data 2	SP	ON OFF	*		*	LED	BI		BO		150	12	1	Yes
366	>CB1 Pole L1 (for AR,CB-Test) (>CB1 Pole L1)	P.System Data 2	SP	*	*		m	LED	BI		BO		150	66	1	Yes

No.	Description	Function	Type of Information	Log Buffers				Configurable in Matrix					IEC 60870-5-103			
				Event Log ON/OFF	Trip (Fault) Log ON/OFF	Ground Fault Log ON/OFF	Marked in Oscill. Record	LED	Binary Input	Function Key	Relay	Chatter Suppression	Type	information number	Data Unit	General Interrogation
367	>CB1 Pole L2 (for AR,CB-Test) (>CB1 Pole L2)	P.System Data 2	SP	*	*		m	LED	BI		BO		150	67	1	Yes
368	>CB1 Pole L3 (for AR,CB-Test) (>CB1 Pole L3)	P.System Data 2	SP	*	*		m	LED	BI		BO		150	68	1	Yes
371	>CB1 READY (for AR,CB-Test) (>CB1 Ready)	P.System Data 2	SP	*	*		*	LED	BI		BO		150	71	1	Yes
378	>CB faulty (>CB faulty)	P.System Data 2	SP	*	*		*	LED	BI		BO					
379	>CB aux. contact 3pole Closed (>CB 3p Closed)	P.System Data 2	SP	*	*		m	LED	BI		BO		150	78	1	Yes
380	>CB aux. contact 3pole Open (>CB 3p Open)	P.System Data 2	SP	*	*		m	LED	BI		BO		150	79	1	Yes
385	>Lockout SET (>Lockout SET)	P.System Data 2	SP	ON OFF	*		*	LED	BI		BO		150	35	1	Yes
386	>Lockout RESET (>Lockout RESET)	P.System Data 2	SP	ON OFF	*		*	LED	BI		BO		150	36	1	Yes
410	>CB1 aux. 3p Closed (for AR, CB-Test) (>CB1 3p Closed)	P.System Data 2	SP	*	*		*	LED	BI		BO		150	80	1	Yes
411	>CB1 aux. 3p Open (for AR, CB-Test) (>CB1 3p Open)	P.System Data 2	SP	*	*		*	LED	BI		BO		150	81	1	Yes
501	Relay PICKUP (Relay PICKUP)	P.System Data 2	OUT	*	*		m	LED			BO					
503	Relay PICKUP Phase L1 (Relay PICKUP L1)	P.System Data 2	OUT	*	*		*	LED			BO		94	64	2	Yes
504	Relay PICKUP Phase L2 (Relay PICKUP L2)	P.System Data 2	OUT	*	*		*	LED			BO		94	65	2	Yes
505	Relay PICKUP Phase L3 (Relay PICKUP L3)	P.System Data 2	OUT	*	*		*	LED			BO		94	66	2	Yes
506	Relay PICKUP Earth (Relay PICKUP E)	P.System Data 2	OUT	*	*		*	LED			BO		94	67	2	Yes
507	Relay TRIP command Phase L1 (Relay TRIP L1)	P.System Data 2	OUT	*	*		*	LED			BO		94	69	2	No
508	Relay TRIP command Phase L2 (Relay TRIP L2)	P.System Data 2	OUT	*	*		*	LED			BO		94	70	2	No
509	Relay TRIP command Phase L3 (Relay TRIP L3)	P.System Data 2	OUT	*	*		*	LED			BO		94	71	2	No

No.	Description	Function	Type of Information	Log Buffers				Configurable in Matrix					IEC 60870-5-103			
				Event Log ON/OFF	Trip (Fault) Log ON/OFF	Ground Fault Log ON/OFF	Marked in Oscill. Record	LED	Binary Input	Function Key	Relay	Chatter Suppression	Type	information number	Data Unit	General Interrogation
510	Relay GENERAL CLOSE command (Relay CLOSE)	P.System Data 2	OUT	*	*	*	*	LED			BO					
511	Relay GENERAL TRIP command (Relay TRIP)	P.System Data 2	OUT	*	OFF		m	LED			BO		94	68	2	No
512	Relay TRIP command - Only Phase L1 (Relay TRIP 1pL1)	P.System Data 2	OUT	*	*		*	LED			BO					
513	Relay TRIP command - Only Phase L2 (Relay TRIP 1pL2)	P.System Data 2	OUT	*	*		*	LED			BO					
514	Relay TRIP command - Only Phase L3 (Relay TRIP 1pL3)	P.System Data 2	OUT	*	*		*	LED			BO					
515	Relay TRIP command Phases L123 (Relay TRIP 3ph.)	P.System Data 2	OUT	*	*		*	LED			BO					
530	LOCKOUT is active (LOCKOUT)	P.System Data 2	IntSP	ON OFF	ON OFF		*	LED			BO		150	170	1	Yes
533	Primary fault current IL1 (IL1 =)	P.System Data 2	VI	*	ON OFF								150	177	4	No
534	Primary fault current IL2 (IL2 =)	P.System Data 2	VI	*	ON OFF								150	178	4	No
535	Primary fault current IL3 (IL3 =)	P.System Data 2	VI	*	ON OFF								150	179	4	No
536	Relay Definitive TRIP (Definitive TRIP)	P.System Data 2	OUT	ON	ON	*	*	LED			BO		150	180	2	No
545	Time from Pickup to drop out (PU Time)	P.System Data 2	VI													
546	Time from Pickup to TRIP (TRIP Time)	P.System Data 2	VI													
561	Manual close signal detected (Man.Clos.Detect)	P.System Data 2	OUT	ON	*		*	LED			BO		150	211	1	No
562	CB CLOSE command for manual closing (Man.Close Cmd)	P.System Data 2	OUT	*	*		*	LED			BO		150	212	1	No
563	CB alarm suppressed (CB Alarm Supp)	P.System Data 2	OUT	*	*	*		LED			BO					
590	Line closure detected (Line closure)	P.System Data 2	OUT	ON OFF	ON OFF		*	LED			BO					

No.	Description	Function	Type of Information	Log Buffers				Configurable in Matrix					IEC 60870-5-103			
				Event Log ON/OFF	Trip (Fault) Log ON/OFF	Ground Fault Log ON/OFF	Marked in Oscill. Record	LED	Binary Input	Function Key	Relay	Chatter Suppression	Type	information number	Data Unit	General Interrogation
591	Single pole open detected in L1 (1pole open L1)	P.System Data 2	OUT	ON OFF	ON OFF		*	LED			BO					
592	Single pole open detected in L2 (1pole open L2)	P.System Data 2	OUT	ON OFF	ON OFF		*	LED			BO					
593	Single pole open detected in L3 (1pole open L3)	P.System Data 2	OUT	ON OFF	ON OFF		*	LED			BO					
1000	Number of breaker TRIP commands (# TRIPs=)	Statistics	VI													
1001	Number of breaker TRIP commands L1 (TripNo L1=)	Statistics	VI													
1002	Number of breaker TRIP commands L2 (TripNo L2=)	Statistics	VI													
1003	Number of breaker TRIP commands L3 (TripNo L3=)	Statistics	VI													
1027	Accumulation of interrupted current L1 (Σ IL1 =)	Statistics	VI													
1028	Accumulation of interrupted current L2 (Σ IL2 =)	Statistics	VI													
1029	Accumulation of interrupted current L3 (Σ IL3 =)	Statistics	VI													
1030	Max. fault current Phase L1 (Max IL1 =)	Statistics	VI													
1031	Max. fault current Phase L2 (Max IL2 =)	Statistics	VI													
1032	Max. fault current Phase L3 (Max IL3 =)	Statistics	VI													
1401	>BF: Switch on breaker fail protection (>BF on)	Breaker Failure	SP	*	*		*	LED	BI		BO					
1402	>BF: Switch off breaker fail protection (>BF off)	Breaker Failure	SP	*	*		*	LED	BI		BO					

No.	Description	Function	Type of Information	Log Buffers				Configurable in Matrix					IEC 60870-5-103			
				Event Log ON/OFF	Trip (Fault) Log ON/OFF	Ground Fault Log ON/OFF	Marked in Oscill. Record	LED	Binary Input	Function Key	Relay	Chatter Suppression	Type	information number	Data Unit	General Interrogation
1403	>BLOCK Breaker failure (>BLOCK BkrFail)	Breaker Failure	SP	ON OFF	*		*	LED	BI		BO		166	103	1	Yes
1404	>BF Activate 3I0> threshold (>BFactivate3I0>)	Breaker Failure	SP	ON OFF	*		*	LED	BI		BO					
1415	>BF: External start 3pole (>BF Start 3pole)	Breaker Failure	SP	ON OFF	*		m	LED	BI		BO					
1424	>BF: Start only delay time T2 (>BF STARTonlyT2)	Breaker Failure	SP	ON OFF	ON OFF		*	LED	BI		BO					
1432	>BF: External release (>BF release)	Breaker Failure	SP	ON OFF	*		m	LED	BI		BO					
1435	>BF: External start L1 (>BF Start L1)	Breaker Failure	SP	ON OFF	*		m	LED	BI		BO					
1436	>BF: External start L2 (>BF Start L2)	Breaker Failure	SP	ON OFF	*		m	LED	BI		BO					
1437	>BF: External start L3 (>BF Start L3)	Breaker Failure	SP	ON OFF	*		m	LED	BI		BO					
1439	>BF: External start 3pole (w/o current) (>BF Start w/o I)	Breaker Failure	SP	ON OFF	*		m	LED	BI		BO					
1440	Breaker failure prot. ON/OFF via BI (BkrFailON/offBI)	Breaker Failure	IntSP	ON OFF	*		*	LED			BO					
1451	Breaker failure is switched OFF (BkrFail OFF)	Breaker Failure	OUT	ON OFF	*		*	LED			BO		166	151	1	Yes

No.	Description	Function	Type of Information	Log Buffers				Configurable in Matrix					IEC 60870-5-103			
				Event Log ON/OFF	Trip (Fault) Log ON/OFF	Ground Fault Log ON/OFF	Marked in Oscill. Record	LED	Binary Input	Function Key	Relay	Chatter Suppression	Type	information number	Data Unit	General Interrogation
1452	Breaker failure is BLOCKED (BkrFail BLOCK)	Breaker Failure	OUT	ON OFF	ON OFF		*	LED			BO		166	152	1	Yes
1453	Breaker failure is ACTIVE (BkrFail ACTIVE)	Breaker Failure	OUT	On Off	*		*	LED			BO		166	153	1	Yes
1461	Breaker failure protection started (BF Start)	Breaker Failure	OUT	*	ON OFF		*	LED			BO		166	161	1	Yes
1466	Breaker failure L1 (BreakerFail. L1)	Breaker Failure	OUT	*	On Off		*	LED			BO					
1467	Breaker failure L2 (BreakerFail. L2)	Breaker Failure	OUT	*	On Off		*	LED			BO					
1468	Breaker failure L3 (BreakerFail. L3)	Breaker Failure	OUT	*	On Off		*	LED			BO					
1469	Breaker failure 3I0 (BreakerFail 3I0)	Breaker Failure	OUT	*	On Off		*	LED			BO					
1472	BF Trip T1 (local trip) - only phase L1 (BF T1-TRIP 1pL1)	Breaker Failure	OUT	*	ON		m	LED			BO					
1473	BF Trip T1 (local trip) - only phase L2 (BF T1-TRIP 1pL2)	Breaker Failure	OUT	*	ON		m	LED			BO					
1474	BF Trip T1 (local trip) - only phase L3 (BF T1-TRIP 1pL3)	Breaker Failure	OUT	*	ON		m	LED			BO					
1476	BF Trip T1 (local trip) - 3pole (BF T1-TRIP L123)	Breaker Failure	OUT	*	ON		m	LED			BO					
1493	BF Trip in case of defective CB (BF TRIP CBdefec)	Breaker Failure	OUT	*	ON		m	LED			BO					
1494	BF Trip T2 (busbar trip) (BF T2-TRIP(bus))	Breaker Failure	OUT	*	ON		m	LED			BO		94	85	2	No
1495	BF Trip End fault stage (BF EndFlt TRIP)	Breaker Failure	OUT	*	ON		m	LED			BO					
1496	BF Pole discrepancy pickup (BF CBdiscrSTART)	Breaker Failure	OUT	*	ON OFF		*	LED			BO					
1497	BF Pole discrepancy pickup L1 (BF CBdiscr L1)	Breaker Failure	OUT	*	ON OFF		*	LED			BO					
1498	BF Pole discrepancy pickup L2 (BF CBdiscr L2)	Breaker Failure	OUT	*	ON OFF		*	LED			BO					
1499	BF Pole discrepancy pickup L3 (BF CBdiscr L3)	Breaker Failure	OUT	*	ON OFF		*	LED			BO					

No.	Description	Function	Type of Information	Log Buffers				Configurable in Matrix					IEC 60870-5-103			
				Event Log ON/OFF	Trip (Fault) Log ON/OFF	Ground Fault Log ON/OFF	Marked in Oscill. Record	LED	Binary Input	Function Key	Relay	Chatter Suppression	Type	information number	Data Unit	General Interrogation
1500	BF Pole discrepancy Trip (BF CBdiscr TRIP)	Breaker Failure	OUT	*	ON		m	LED			BO					
2701	>AR: Switch on auto-reclose function (>AR on)	Autoreclo-sure	SP	*	*		*	LED	BI		BO		40	1	1	No
2702	>AR: Switch off auto-reclose function (>AR off)	Autoreclo-sure	SP	*	*		*	LED	BI		BO		40	2	1	No
2703	>AR: Block auto-reclose function (>AR block)	Autoreclo-sure	SP	ON OFF	*		*	LED	BI		BO		40	3	1	Yes
2711	>External start of internal Auto reclose (>AR Start)	Autoreclo-sure	SP	*	ON		m	LED	BI		BO		40	11	2	Yes
2712	>AR: External trip L1 for AR start (>Trip L1 AR)	Autoreclo-sure	SP	*	ON		m	LED	BI		BO		40	12	2	Yes
2713	>AR: External trip L2 for AR start (>Trip L2 AR)	Autoreclo-sure	SP	*	ON		m	LED	BI		BO		40	13	2	Yes
2714	>AR: External trip L3 for AR start (>Trip L3 AR)	Autoreclo-sure	SP	*	ON		m	LED	BI		BO		40	14	2	Yes
2715	>AR: External 1pole trip for AR start (>Trip 1pole AR)	Autoreclo-sure	SP	*	ON		m	LED	BI		BO		40	15	2	Yes
2716	>AR: External 3pole trip for AR start (>Trip 3pole AR)	Autoreclo-sure	SP	*	ON		m	LED	BI		BO		40	16	2	Yes
2727	>AR: Remote Close signal (>AR RemoteClose)	Autoreclo-sure	SP	*	ON		*	LED	BI		BO		40	22	2	Yes
2731	>AR: Sync. release from ext. sync.-check (>Sync.release)	Autoreclo-sure	SP	*	*		*	LED	BI		BO		40	31	2	Yes
2737	>AR: Block 1pole AR-cycle (>BLOCK 1pole AR)	Autoreclo-sure	SP	ON OFF	*		*	LED	BI		BO		40	32	1	Yes
2738	>AR: Block 3pole AR-cycle (>BLOCK 3pole AR)	Autoreclo-sure	SP	ON OFF	*		*	LED	BI		BO		40	33	1	Yes
2739	>AR: Block 1phase-fault AR-cycle (>BLK 1phase AR)	Autoreclo-sure	SP	ON OFF	*		*	LED	BI		BO		40	34	1	Yes

No.	Description	Function	Type of Information	Log Buffers				Configurable in Matrix					IEC 60870-5-103			
				Event Log ON/OFF	Trip (Fault) Log ON/OFF	Ground Fault Log ON/OFF	Marked in Oscill. Record	LED	Binary Input	Function Key	Relay	Chatter Suppression	Type	information number	Data Unit	General Interrogation
2740	>AR: Block 2phase-fault AR-cycle (>BLK 2phase AR)	Autoreclo-sure	SP	ON OFF	*		*	LED	BI		BO		40	35	1	Yes
2741	>AR: Block 3phase-fault AR-cycle (>BLK 3phase AR)	Autoreclo-sure	SP	ON OFF	*		*	LED	BI		BO		40	36	1	Yes
2742	>AR: Block 1st AR-cycle (>BLK 1.AR-cycle)	Autoreclo-sure	SP	ON OFF	*		*	LED	BI		BO		40	37	1	Yes
2743	>AR: Block 2nd AR-cycle (>BLK 2.AR-cycle)	Autoreclo-sure	SP	ON OFF	*		*	LED	BI		BO		40	38	1	Yes
2744	>AR: Block 3rd AR-cycle (>BLK 3.AR-cycle)	Autoreclo-sure	SP	ON OFF	*		*	LED	BI		BO		40	39	1	Yes
2745	>AR: Block 4th and higher AR-cycles (>BLK 4.-n. AR)	Autoreclo-sure	SP	ON OFF	*		*	LED	BI		BO		40	40	1	Yes
2746	>AR: External Trip for AR start (>Trip for AR)	Autoreclo-sure	SP	*	ON		m	LED	BI		BO		40	41	2	Yes
2747	>AR: External pickup L1 for AR start (>Pickup L1 AR)	Autoreclo-sure	SP	*	ON		*	LED	BI		BO		40	42	2	Yes
2748	>AR: External pickup L2 for AR start (>Pickup L2 AR)	Autoreclo-sure	SP	*	ON		*	LED	BI		BO		40	43	2	Yes
2749	>AR: External pickup L3 for AR start (>Pickup L3 AR)	Autoreclo-sure	SP	*	ON		*	LED	BI		BO		40	44	2	Yes
2750	>AR: External pickup 1phase for AR start (>Pickup 1ph AR)	Autoreclo-sure	SP	*	ON		*	LED	BI		BO		40	45	2	Yes
2751	>AR: External pickup 2phase for AR start (>Pickup 2ph AR)	Autoreclo-sure	SP	*	ON		*	LED	BI		BO		40	46	2	Yes
2752	>AR: External pickup 3phase for AR start (>Pickup 3ph AR)	Autoreclo-sure	SP	*	ON		*	LED	BI		BO		40	47	2	Yes

No.	Description	Function	Type of Information	Log Buffers				Configurable in Matrix					IEC 60870-5-103			
				Event Log ON/OFF	Trip (Fault) Log ON/OFF	Ground Fault Log ON/OFF	Marked in Oscill. Record	LED	Binary Input	Function Key	Relay	Chatter Suppression	Type	information number	Data Unit	General Interrogation
2781	AR: Auto-reclose is switched off (AR off)	Autoreclo-sure	OUT	ON OFF	*		*	LED			BO		40	81	1	Yes
2782	AR: Auto-reclose is switched on (AR on)	Autoreclo-sure	IntSP	*	*		*	LED			BO		94	16	1	Yes
2783	AR: Auto-reclose is blocked (AR is blocked)	Autoreclo-sure	OUT	ON OFF	*		*	LED			BO		40	83	1	Yes
2784	AR: Auto-reclose is not ready (AR not ready)	Autoreclo-sure	OUT	*	ON		*	LED			BO		94	130	1	Yes
2787	AR: Circuit breaker not ready (CB not ready)	Autoreclo-sure	OUT	*	*		*	LED			BO		40	87	1	No
2788	AR: CB ready monitoring window expired (AR T-CBreadyExp)	Autoreclo-sure	OUT	*	ON		*	LED			BO		40	88	2	No
2796	AR: Auto-reclose ON/OFF via BI (AR on/off BI)	Autoreclo-sure	IntSP	*	*		*	LED			BO					
2801	AR: Auto-reclose in progress (AR in progress)	Autoreclo-sure	OUT	*	ON		*	LED			BO		40	101	2	Yes
2809	AR: Start-signal monitoring time expired (AR T-Start Exp)	Autoreclo-sure	OUT	*	ON		*	LED			BO		40	174	1	No
2810	AR: Maximum dead time expired (AR TdeadMax Exp)	Autoreclo-sure	OUT	*	ON		*	LED			BO		40	175	1	No
2818	AR: Evolving fault recognition (AR evolving Flt)	Autoreclo-sure	OUT	*	ON		*	LED			BO		40	118	2	Yes
2820	AR is set to operate after 1p trip only (AR Program1pole)	Autoreclo-sure	OUT	*	*		*	LED			BO		40	143	1	No
2821	AR dead time after evolving fault (AR Td. evol.Flt)	Autoreclo-sure	OUT	*	ON		*	LED			BO		40	197	2	No
2839	AR dead time after 1pole trip running (AR Tdead 1pTrip)	Autoreclo-sure	OUT	*	ON		*	LED			BO		40	148	2	Yes
2840	AR dead time after 3pole trip running (AR Tdead 3pTrip)	Autoreclo-sure	OUT	*	ON		*	LED			BO		40	149	2	Yes
2841	AR dead time after 1phase fault running (AR Tdead 1pFlt)	Autoreclo-sure	OUT	*	ON		*	LED			BO		40	150	2	Yes

No.	Description	Function	Type of Information	Log Buffers				Configurable in Matrix					IEC 60870-5-103			
				Event Log ON/OFF	Trip (Fault) Log ON/OFF	Ground Fault Log ON/OFF	Marked in Oscill. Record	LED	Binary Input	Function Key	Relay	Chatter Suppression	Type	information number	Data Unit	General Interrogation
2842	AR dead time after 2phase fault running (AR Tdead 2pFlt)	Autoreclo-sure	OUT	*	ON		*	LED			BO		40	151	2	Yes
2843	AR dead time after 3phase fault running (AR Tdead 3pFlt)	Autoreclo-sure	OUT	*	ON		*	LED			BO		40	154	2	Yes
2844	AR 1st cycle running (AR 1stCyc. run.)	Autoreclo-sure	OUT	*	ON		*	LED			BO		40	155	2	Yes
2845	AR 2nd cycle running (AR 2ndCyc. run.)	Autoreclo-sure	OUT	*	ON		*	LED			BO		40	157	2	Yes
2846	AR 3rd cycle running (AR 3rdCyc. run.)	Autoreclo-sure	OUT	*	ON		*	LED			BO		40	158	2	Yes
2847	AR 4th or higher cycle running (AR 4thCyc. run.)	Autoreclo-sure	OUT	*	ON		*	LED			BO		40	159	2	Yes
2848	AR cycle is running in ADT mode (AR ADT run.)	Autoreclo-sure	OUT	*	ON		*	LED			BO		40	130	2	Yes
2851	AR: Close command (AR CLOSE Cmd.)	Autoreclo-sure	OUT	*	ON		m	LED			BO		94	128	1	No
2852	AR: Close command after 1pole, 1st cycle (AR Close1.Cyc1p)	Autoreclo-sure	OUT	*	*		*	LED			BO		40	152	1	No
2853	AR: Close command after 3pole, 1st cycle (AR Close1.Cyc3p)	Autoreclo-sure	OUT	*	*		*	LED			BO		40	153	1	No
2854	AR: Close command 2nd cycle (and higher) (AR Close 2.Cyc)	Autoreclo-sure	OUT	*	*		*	LED			BO		94	129	1	No
2857	AR: RDT Close command after TDEADxTRIP (AR CLOSE RDT TD)	Autoreclo-sure	OUT	*	*		*	LED			BO					
2861	AR: Reclaim time is running (AR T-Recl. run.)	Autoreclo-sure	OUT	*	*		*	LED			BO		40	161	1	No
2862	AR successful (AR successful)	Autoreclo-sure	OUT	*	*		*	LED			BO		40	162	1	No
2864	AR: 1pole trip permitted by internal AR (AR 1p Trip Perm)	Autoreclo-sure	OUT	*	*		m	LED			BO		40	164	1	Yes
2865	AR: Synchro-check request (AR Sync.Request)	Autoreclo-sure	OUT	*	*		*	LED			BO		40	165	2	Yes
2871	AR: TRIP command 3pole (AR TRIP 3pole)	Autoreclo-sure	OUT	*	ON		m	LED			BO		40	171	2	Yes

No.	Description	Function	Type of Information	Log Buffers				Configurable in Matrix					IEC 60870-5-103			
				Event Log ON/OFF	Trip (Fault) Log ON/OFF	Ground Fault Log ON/OFF	Marked in Oscill. Record	LED	Binary Input	Function Key	Relay	Chatter Suppression	Type	information number	Data Unit	General Interrogation
2889	AR 1st cycle zone extension release (AR 1.CycZoneRel)	Autoreclosure	OUT	*	*		*	LED			BO		40	160	1	No
2890	AR 2nd cycle zone extension release (AR 2.CycZoneRel)	Autoreclosure	OUT	*	*		*	LED			BO		40	169	1	No
2891	AR 3rd cycle zone extension release (AR 3.CycZoneRel)	Autoreclosure	OUT	*	*		*	LED			BO		40	170	1	No
2892	AR 4th cycle zone extension release (AR 4.CycZoneRel)	Autoreclosure	OUT	*	*		*	LED			BO		40	172	1	No
2893	AR zone extension (general) (AR Zone Release)	Autoreclosure	OUT	*	*		*	LED			BO		40	173	1	Yes
2894	AR Remote close signal send (AR Remote Close)	Autoreclosure	OUT	*	ON		*	LED			BO		40	129	1	No
2895	No. of 1st AR-cycle CLOSE commands,1pole (AR #Close1./1p=)	Statistics	VI													
2896	No. of 1st AR-cycle CLOSE commands,3pole (AR #Close1./3p=)	Statistics	VI													
2897	No. of higher AR-cycle CLOSE commands,1p (AR #Close2./1p=)	Statistics	VI													
2898	No. of higher AR-cycle CLOSE commands,3p (AR #Close2./3p=)	Statistics	VI													
2901	>Switch on synchro-check function (>Sync. on)	Sync. Check	SP	*	*		*	LED	BI		BO					
2902	>Switch off synchro-check function (>Sync. off)	Sync. Check	SP	*	*		*	LED	BI		BO					
2903	>BLOCK synchro-check function (>BLOCK Sync.)	Sync. Check	SP	*	*		*	LED	BI		BO					
2905	>Start synchro-check for Manual Close (>Sync. Start MC)	Sync. Check	SP	On Off	*		*	LED	BI		BO					
2906	>Start synchro-check for AR (>Sync. Start AR)	Sync. Check	SP	On Off	*		*	LED	BI		BO					
2907	>Sync-Prog. Live bus / live line / Sync (>Sync. synch)	Sync. Check	SP	*	*		*	LED	BI		BO					

No.	Description	Function	Type of Information	Log Buffers				Configurable in Matrix					IEC 60870-5-103			
				Event Log ON/OFF	Trip (Fault) Log ON/OFF	Ground Fault Log ON/OFF	Marked in Oscill. Record	LED	Binary Input	Function Key	Relay	Chatter Suppression	Type	information number	Data Unit	General Interrogation
2908	>Sync-Prog. Usy1>Usy2< (>Usy1>Usy2<)	Sync. Check	SP	*	*		*	LED	BI		BO					
2909	>Sync-Prog. Usy1<Usy2> (>Usy1<Usy2>)	Sync. Check	SP	*	*		*	LED	BI		BO					
2910	>Sync-Prog. Usy1<Usy2< (>Usy1<Usy2<)	Sync. Check	SP	*	*		*	LED	BI		BO					
2911	>Sync-Prog. Override (bypass) (>Sync. o/ride)	Sync. Check	SP	*	*		*	LED	BI		BO					
2930	Synchro-check ON/OFF via BI (Sync. on/off BI)	Sync. Check	IntSP	ON OFF	*		*	LED			BO					
2931	Synchro-check is switched OFF (Sync. OFF)	Sync. Check	OUT	ON OFF	*		*	LED			BO		41	31	1	Yes
2932	Synchro-check is BLOCKED (Sync. BLOCK)	Sync. Check	OUT	ON OFF	ON OFF		*	LED			BO		41	32	1	Yes
2934	Synchro-check function faulty (Sync. faulty)	Sync. Check	OUT	ON OFF	*		*	LED			BO		41	34	1	Yes
2935	Synchro-check supervision time expired (Sync.Tsup.Exp)	Sync. Check	OUT	ON	ON		*	LED			BO		41	35	1	No
2936	Synchro-check request by control (Sync. req.CNTRL)	Sync. Check	OUT	ON	ON		m	LED			BO		41	36	1	No
2941	Synchronization is running (Sync. running)	Sync. Check	OUT	ON OFF	ON		*	LED			BO		41	41	1	Yes
2942	Synchro-check override/ bypass (Sync.Override)	Sync. Check	OUT	ON OFF	ON		*	LED			BO		41	42	1	Yes
2943	Synchronism detected (Synchronism)	Sync. Check	OUT	ON OFF	*		*	LED			BO		41	43	1	Yes
2944	SYNC Condition Usy1>Usy2< true (SYNC Usy1>Usy2<)	Sync. Check	OUT	ON OFF	*		*	LED			BO		41	44	1	Yes

No.	Description	Function	Type of Information	Log Buffers				Configurable in Matrix					IEC 60870-5-103			
				Event Log ON/OFF	Trip (Fault) Log ON/OFF	Ground Fault Log ON/OFF	Marked in Oscill. Record	LED	Binary Input	Function Key	Relay	Chatter Suppression	Type	information number	Data Unit	General Interrogation
2945	SYNC Condition Usy1<Usy2> true (SYNC Usy1<Usy2>)	Sync. Check	OUT	ON OFF	*		*	LED			BO		41	45	1	Yes
2946	SYNC Condition Usy1<Usy2< true (SYNC Usy1<Usy2<)	Sync. Check	OUT	ON OFF	*		*	LED			BO		41	46	1	Yes
2947	Sync. Voltage diff. greater than limit (Sync. Udiff>)	Sync. Check	OUT	ON OFF	ON OFF		*	LED			BO		41	47	1	Yes
2948	Sync. Freq. diff. greater than limit (Sync. fdiff>)	Sync. Check	OUT	ON OFF	ON OFF		*	LED			BO		41	48	1	Yes
2949	Sync. Angle diff. greater than limit (Sync. φ-diff>)	Sync. Check	OUT	ON OFF	ON OFF		*	LED			BO		41	49	1	Yes
2951	Synchronism release (to ext. AR) (Sync. release)	Sync. Check	OUT	*	*		m	LED			BO		41	51	1	Yes
2961	Close command from synchro-check (Sync.CloseCmd)	Sync. Check	OUT	*	*		m	LED			BO		41	61	1	Yes
2970	SYNC frequency fsy2 > (fn + 3Hz) (SYNC fsy2>>)	Sync. Check	OUT	ON OFF	ON OFF		*	LED			BO					
2971	SYNC frequency fsy2 < (fn + 3Hz) (SYNC fsy2<<)	Sync. Check	OUT	ON OFF	ON OFF		*	LED			BO					
2972	SYNC frequency fsy1 > (fn + 3Hz) (SYNC fsy1>>)	Sync. Check	OUT	ON OFF	ON OFF		*	LED			BO					
2973	SYNC frequency fsy1 < (fn + 3Hz) (SYNC fsy1<<)	Sync. Check	OUT	ON OFF	ON OFF		*	LED			BO					
2974	SYNC voltage Usy2 >Umax (P.3504) (SYNC Usy2>>)	Sync. Check	OUT	ON OFF	ON OFF		*	LED			BO					

No.	Description	Function	Type of Information	Log Buffers				Configurable in Matrix					IEC 60870-5-103			
				Event Log ON/OFF	Trip (Fault) Log ON/OFF	Ground Fault Log ON/OFF	Marked in Oscill. Record	LED	Binary Input	Function Key	Relay	Chatter Suppression	Type	information number	Data Unit	General Interrogation
2975	SYNC voltage Usy2 < U> (P.3503) (SYNC Usy2<<)	Sync. Check	OUT	ON OFF	ON OFF		*	LED			BO					
2976	SYNC voltage Usy1 >Umax (P.3504) (SYNC Usy1>>)	Sync. Check	OUT	ON OFF	ON OFF		*	LED			BO					
2977	SYNC voltage Usy1 < U> (P.3503) (SYNC Usy1<<)	Sync. Check	OUT	ON OFF	ON OFF		*	LED			BO					
2978	SYNC Udiff too large (Usy2>Usy1) (SYNC Usy2>Usy1)	Sync. Check	OUT	ON OFF	ON OFF		*	LED			BO					
2979	SYNC Udiff too large (Usy2<Usy1) (SYNC Usy2<Usy1)	Sync. Check	OUT	ON OFF	ON OFF		*	LED			BO					
2980	SYNC fdiff too large (fsy2>fsy1) (SYNC fsy2>fsy1)	Sync. Check	OUT	ON OFF	ON OFF		*	LED			BO					
2981	SYNC fdiff too large (fsy2<fsy1) (SYNC fsy2<fsy1)	Sync. Check	OUT	ON OFF	ON OFF		*	LED			BO					
2982	SYNC PHIdiff too large (PHIsy2>PHIsy1) (SYNC φsy2>φsy1)	Sync. Check	OUT	ON OFF	ON OFF		*	LED			BO					
2983	SYNC PHIdiff too large (PHIsy2<PHIsy1) (SYNC φsy2<φsy1)	Sync. Check	OUT	ON OFF	ON OFF		*	LED			BO					
6854	>Trip circuit superv. 1: Trip Relay (>TripC1 TripRel)	Trip-Circ.Superv	SP	ON OFF	*		*	LED	BI		BO					
6855	>Trip circuit superv. 1: Breaker Relay (>TripC1 Bkr.Rel)	Trip-Circ.Superv	SP	ON OFF	*		*	LED	BI		BO					

No.	Description	Function	Type of Information	Log Buffers				Configurable in Matrix					IEC 60870-5-103			
				Event Log ON/OFF	Trip (Fault) Log ON/OFF	Ground Fault Log ON/OFF	Marked in Oscill. Record	LED	Binary Input	Function Key	Relay	Chatter Suppression	Type	information number	Data Unit	General Interrogation
6856	>Trip circuit superv. 2: Trip Relay (>TripC2 TripRel)	Trip-Circ.Superv	SP	ON OFF	*		*	LED	BI		BO					
6857	>Trip circuit superv. 2: Breaker Relay (>TripC2 Bkr.Rel)	Trip-Circ.Superv	SP	ON OFF	*		*	LED	BI		BO					
6858	>Trip circuit superv. 3: Trip Relay (>TripC3 TripRel)	Trip-Circ.Superv	SP	ON OFF	*		*	LED	BI		BO					
6859	>Trip circuit superv. 3: Breaker Relay (>TripC3 Bkr.Rel)	Trip-Circ.Superv	SP	ON OFF	*		*	LED	BI		BO					
6861	Trip circuit supervision OFF (TripC OFF)	Trip-Circ.Superv	OUT	ON OFF	*		*	LED			BO					
6865	Failure Trip Circuit (FAIL: Trip cir.)	Trip-Circ.Superv	OUT	ON OFF	*		*	LED			BO		94	36	1	Yes
6866	TripC1 blocked: Binary input is not set (TripC1 ProgFAIL)	Trip-Circ.Superv	OUT	ON OFF	*		*	LED			BO					
6867	TripC2 blocked: Binary input is not set (TripC2 ProgFAIL)	Trip-Circ.Superv	OUT	ON OFF	*		*	LED			BO					
6868	TripC3 blocked: Binary input is not set (TripC3 ProgFAIL)	Trip-Circ.Superv	OUT	ON OFF	*		*	LED			BO					
7104	>BLOCK Backup OverCurrent I>> (>BLOCK O/C I>>)	Back-Up O/C	SP	ON OFF	*		*	LED	BI		BO		64	4	1	Yes
7105	>BLOCK Backup OverCurrent I> (>BLOCK O/C I>)	Back-Up O/C	SP	ON OFF	*		*	LED	BI		BO		64	5	1	Yes

No.	Description	Function	Type of Information	Log Buffers				Configurable in Matrix					IEC 60870-5-103			
				Event Log ON/OFF	Trip (Fault) Log ON/OFF	Ground Fault Log ON/OFF	Marked in Oscill. Record	LED	Binary Input	Function Key	Relay	Chatter Suppression	Type	information number	Data Unit	General Interrogation
7106	>BLOCK Backup OverCurrent Ip (>BLOCK O/C Ip)	Back-Up O/C	SP	ON OFF	*		*	LED	BI		BO		64	6	1	Yes
7110	>Backup OverCurrent InstantaneousTrip (>O/C InstTRIP)	Back-Up O/C	SP	ON OFF	ON OFF		*	LED	BI		BO		64	10	1	Yes
7130	>BLOCK I-STUB (>BLOCK I-STUB)	Back-Up O/C	SP	ON OFF	*		*	LED	BI		BO		64	30	1	Yes
7131	>Enable I-STUB-Bus function (>I-STUB ENABLE)	Back-Up O/C	SP	ON OFF	ON OFF		*	LED	BI		BO		64	31	1	Yes
7151	Backup O/C is switched OFF (O/C OFF)	Back-Up O/C	OUT	ON OFF	*		*	LED			BO		64	51	1	Yes
7152	Backup O/C is BLOCKED (O/C BLOCK)	Back-Up O/C	OUT	ON OFF	ON OFF		*	LED			BO		64	52	1	Yes
7153	Backup O/C is ACTIVE (O/C ACTIVE)	Back-Up O/C	OUT	On Off	*		*	LED			BO		64	53	1	Yes
7161	Backup O/C PICKED UP (O/C PICKUP)	Back-Up O/C	OUT	*	OFF		*	LED			BO		64	61	2	Yes
7162	Backup O/C PICKUP L1 (O/C Pickup L1)	Back-Up O/C	OUT	*	ON		*	LED			BO		64	62	2	Yes
7163	Backup O/C PICKUP L2 (O/C Pickup L2)	Back-Up O/C	OUT	*	ON		*	LED			BO		64	63	2	Yes
7164	Backup O/C PICKUP L3 (O/C Pickup L3)	Back-Up O/C	OUT	*	ON		*	LED			BO		64	64	2	Yes
7165	Backup O/C PICKUP EARTH (O/C Pickup E)	Back-Up O/C	OUT	*	ON		*	LED			BO		64	65	2	Yes
7171	Backup O/C Pickup - Only EARTH (O/C PU only E)	Back-Up O/C	OUT	*	ON		*	LED			BO		64	71	2	No
7172	Backup O/C Pickup - Only L1 (O/C PU 1p. L1)	Back-Up O/C	OUT	*	ON		*	LED			BO		64	72	2	No
7173	Backup O/C Pickup L1E (O/C Pickup L1E)	Back-Up O/C	OUT	*	ON		*	LED			BO		64	73	2	No

No.	Description	Function	Type of Information	Log Buffers				Configurable in Matrix					IEC 60870-5-103			
				Event Log ON/OFF	Trip (Fault) Log ON/OFF	Ground Fault Log ON/OFF	Marked in Oscill. Record	LED	Binary Input	Function Key	Relay	Chatter Suppression	Type	information number	Data Unit	General Interrogation
7174	Backup O/C Pickup - Only L2 (O/C PU 1p. L2)	Back-Up O/C	OUT	*	ON		*	LED			BO		64	74	2	No
7175	Backup O/C Pickup L2E (O/C Pickup L2E)	Back-Up O/C	OUT	*	ON		*	LED			BO		64	75	2	No
7176	Backup O/C Pickup L12 (O/C Pickup L12)	Back-Up O/C	OUT	*	ON		*	LED			BO		64	76	2	No
7177	Backup O/C Pickup L12E (O/C Pickup L12E)	Back-Up O/C	OUT	*	ON		*	LED			BO		64	77	2	No
7178	Backup O/C Pickup - Only L3 (O/C PU 1p. L3)	Back-Up O/C	OUT	*	ON		*	LED			BO		64	78	2	No
7179	Backup O/C Pickup L3E (O/C Pickup L3E)	Back-Up O/C	OUT	*	ON		*	LED			BO		64	79	2	No
7180	Backup O/C Pickup L31 (O/C Pickup L31)	Back-Up O/C	OUT	*	ON		*	LED			BO		64	80	2	No
7181	Backup O/C Pickup L31E (O/C Pickup L31E)	Back-Up O/C	OUT	*	ON		*	LED			BO		64	81	2	No
7182	Backup O/C Pickup L23 (O/C Pickup L23)	Back-Up O/C	OUT	*	ON		*	LED			BO		64	82	2	No
7183	Backup O/C Pickup L23E (O/C Pickup L23E)	Back-Up O/C	OUT	*	ON		*	LED			BO		64	83	2	No
7184	Backup O/C Pickup L123 (O/C Pickup L123)	Back-Up O/C	OUT	*	ON		*	LED			BO		64	84	2	No
7185	Backup O/C Pickup L123E (O/C PickupL123E)	Back-Up O/C	OUT	*	ON		*	LED			BO		64	85	2	No
7191	Backup O/C Pickup I>> (O/C PICKUP I>>)	Back-Up O/C	OUT	*	ON		*	LED			BO		64	91	2	Yes
7192	Backup O/C Pickup I> (O/C PICKUP I>)	Back-Up O/C	OUT	*	ON		*	LED			BO		64	92	2	Yes
7193	Backup O/C Pickup Ip (O/C PICKUP Ip)	Back-Up O/C	OUT	*	ON		*	LED			BO		64	93	2	Yes
7201	O/C I-STUB Pickup (I-STUB PICKUP)	Back-Up O/C	OUT	*	ON OFF		*	LED			BO		64	101	2	Yes
7211	Backup O/C General TRIP command (O/C TRIP)	Back-Up O/C	OUT	*	*		*	LED			BO					
7212	Backup O/C TRIP - Only L1 (O/C TRIP 1p.L1)	Back-Up O/C	OUT	*	ON		*	LED			BO		64	112	2	No
7213	Backup O/C TRIP - Only L2 (O/C TRIP 1p.L2)	Back-Up O/C	OUT	*	ON		*	LED			BO		64	113	2	No
7214	Backup O/C TRIP - Only L3 (O/C TRIP 1p.L3)	Back-Up O/C	OUT	*	ON		*	LED			BO		64	114	2	No
7215	Backup O/C TRIP Phases L123 (O/C TRIP L123)	Back-Up O/C	OUT	*	ON		*	LED			BO		64	115	2	No

No.	Description	Function	Type of Information	Log Buffers				Configurable in Matrix					IEC 60870-5-103			
				Event Log ON/OFF	Trip (Fault) Log ON/OFF	Ground Fault Log ON/OFF	Marked in Oscill. Record	LED	Binary Input	Function Key	Relay	Chatter Suppression	Type	information number	Data Unit	General Interrogation
7221	Backup O/C TRIP I>> (O/C TRIP I>>)	Back-Up O/C	OUT	*	ON		*	LED			BO		64	121	2	No
7222	Backup O/C TRIP I> (O/C TRIP I>)	Back-Up O/C	OUT	*	ON		*	LED			BO		64	122	2	No
7223	Backup O/C TRIP Ip (O/C TRIP Ip)	Back-Up O/C	OUT	*	ON		*	LED			BO		64	123	2	No
7235	O/C I-STUB TRIP (I-STUB TRIP)	Back-Up O/C	OUT	*	ON		*	LED			BO		64	135	2	No
7325	CB1-TEST TRIP command - Only L1 (CB1-TESTtrip L1)	Testing	OUT	ON OFF	*		*	LED			BO		153	25	1	Yes
7326	CB1-TEST TRIP command - Only L2 (CB1-TESTtrip L2)	Testing	OUT	ON OFF	*		*	LED			BO		153	26	1	Yes
7327	CB1-TEST TRIP command - Only L3 (CB1-TESTtrip L3)	Testing	OUT	ON OFF	*		*	LED			BO		153	27	1	Yes
7328	CB1-TEST TRIP command L123 (CB1-TESTtrip123)	Testing	OUT	ON OFF	*		*	LED			BO		153	28	1	Yes
7329	CB1-TEST CLOSE command (CB1-TEST close)	Testing	OUT	ON OFF	*		*	LED			BO		153	29	1	Yes
7345	CB-TEST is in progress (CB-TEST running)	Testing	OUT	ON OFF	*		*	LED			BO		153	45	1	Yes
7346	CB-TEST canceled due to Power Sys. Fault (CB-TSTstop FLT.)	Testing	OUT_Ev	ON	*											
7347	CB-TEST canceled due to CB already OPEN (CB-TSTstop OPEN)	Testing	OUT_Ev	ON	*											
7348	CB-TEST canceled due to CB was NOT READY (CB-TSTstop NOTr)	Testing	OUT_Ev	ON	*											
7349	CB-TEST canceled due to CB stayed CLOSED (CB-TSTstop CLOS)	Testing	OUT_Ev	ON	*											

No.	Description	Function	Type of Information	Log Buffers				Configurable in Matrix					IEC 60870-5-103			
				Event Log ON/OFF	Trip (Fault) Log ON/OFF	Ground Fault Log ON/OFF	Marked in Oscill. Record	LED	Binary Input	Function Key	Relay	Chatter Suppression	Type	information number	Data Unit	General Interrogation
7350	CB-TEST was successful (CB-TST .OK.)	Testing	OUT_Ev	ON	*											
10201	>BLOCK Uph-e>(>) Overvolt. (phase-earth) (>Uph-e>(>) BLK)	Voltage Prot.	SP	*	*		*	LED	BI		BO					
10202	>BLOCK Uph-ph>(>) Overvolt (phase-phase) (>Uph-ph>(>) BLK)	Voltage Prot.	SP	*	*		*	LED	BI		BO					
10203	>BLOCK 3U0>(>) Overvolt. (zero sequence) (>3U0>(>) BLK)	Voltage Prot.	SP	*	*		*	LED	BI		BO					
10204	>BLOCK U1>(>) Overvolt. (positive seq.) (>U1>(>) BLK)	Voltage Prot.	SP	*	*		*	LED	BI		BO					
10205	>BLOCK U2>(>) Overvolt. (negative seq.) (>U2>(>) BLK)	Voltage Prot.	SP	*	*		*	LED	BI		BO					
10206	>BLOCK Uph-e<(<) Undervolt (phase-earth) (>Uph-e<(<) BLK)	Voltage Prot.	SP	*	*		*	LED	BI		BO					
10207	>BLOCK Uphph<(<) Undervolt (phase-phase) (>Uphph<(<) BLK)	Voltage Prot.	SP	*	*		*	LED	BI		BO					
10208	>BLOCK U1<(<) Undervolt (positive seq.) (>U1<(<) BLK)	Voltage Prot.	SP	*	*		*	LED	BI		BO					
10215	Uph-e>(>) Overvolt. is switched OFF (Uph-e>(>) OFF)	Voltage Prot.	OUT	ON OFF	*		*	LED			BO		73	15	1	Yes
10216	Uph-e>(>) Overvolt. is BLOCKED (Uph-e>(>) BLK)	Voltage Prot.	OUT	ON OFF	ON OFF		*	LED			BO		73	16	1	Yes
10217	Uph-ph>(>) Overvolt. is switched OFF (Uph-ph>(>) OFF)	Voltage Prot.	OUT	ON OFF	*		*	LED			BO		73	17	1	Yes
10218	Uph-ph>(>) Overvolt. is BLOCKED (Uph-ph>(>) BLK)	Voltage Prot.	OUT	ON OFF	ON OFF		*	LED			BO		73	18	1	Yes

No.	Description	Function	Type of Information	Log Buffers				Configurable in Matrix					IEC 60870-5-103			
				Event Log ON/OFF	Trip (Fault) Log ON/OFF	Ground Fault Log ON/OFF	Marked in Oscill. Record	LED	Binary Input	Function Key	Relay	Chatter Suppression	Type	information number	Data Unit	General Interrogation
10219	3U0>(>) Overvolt. is switched OFF (3U0>(>) OFF)	Voltage Prot.	OUT	ON OFF	*		*	LED			BO		73	19	1	Yes
10220	3U0>(>) Overvolt. is BLOCKED (3U0>(>) BLK)	Voltage Prot.	OUT	ON OFF	ON OFF		*	LED			BO		73	20	1	Yes
10221	U1>(>) Overvolt. is switched OFF (U1>(>) OFF)	Voltage Prot.	OUT	ON OFF	*		*	LED			BO		73	21	1	Yes
10222	U1>(>) Overvolt. is BLOCKED (U1>(>) BLK)	Voltage Prot.	OUT	ON OFF	ON OFF		*	LED			BO		73	22	1	Yes
10223	U2>(>) Overvolt. is switched OFF (U2>(>) OFF)	Voltage Prot.	OUT	ON OFF	*		*	LED			BO		73	23	1	Yes
10224	U2>(>) Overvolt. is BLOCKED (U2>(>) BLK)	Voltage Prot.	OUT	ON OFF	ON OFF		*	LED			BO		73	24	1	Yes
10225	Uph-e<(<) Undervolt. is switched OFF (Uph-e<(<) OFF)	Voltage Prot.	OUT	ON OFF	*		*	LED			BO		73	25	1	Yes
10226	Uph-e<(<) Undervolt. is BLOCKED (Uph-e<(<) BLK)	Voltage Prot.	OUT	ON OFF	ON OFF		*	LED			BO		73	26	1	Yes
10227	Uph-ph<(<) Undervolt. is switched OFF (Uph-ph<(<) OFF)	Voltage Prot.	OUT	ON OFF	*		*	LED			BO		73	27	1	Yes
10228	Uphph<(<) Undervolt. is BLOCKED (Uph-ph<(<) BLK)	Voltage Prot.	OUT	ON OFF	ON OFF		*	LED			BO		73	28	1	Yes
10229	U1<(<) Undervolt. is switched OFF (U1<(<) OFF)	Voltage Prot.	OUT	ON OFF	*		*	LED			BO		73	29	1	Yes

No.	Description	Function	Type of Information	Log Buffers				Configurable in Matrix					IEC 60870-5-103			
				Event Log ON/OFF	Trip (Fault) Log ON/OFF	Ground Fault Log ON/OFF	Marked in Oscill. Record	LED	Binary Input	Function Key	Relay	Chatter Suppression	Type	information number	Data Unit	General Interrogation
10230	U1<(<) Undervolt. is BLOCKED (U1<(<) BLK)	Voltage Prot.	OUT	ON OFF	ON OFF		*	LED			BO		73	30	1	Yes
10231	Over-/Under-Voltage protection is ACTIVE (U</> ACTIVE)	Voltage Prot.	OUT	ON OFF	*		*	LED			BO		73	31	1	Yes
10240	Uph-e> Pickup (Uph-e> Pickup)	Voltage Prot.	OUT	*	ON OFF		*	LED			BO		73	40	2	Yes
10241	Uph-e>> Pickup (Uph-e>> Pickup)	Voltage Prot.	OUT	*	ON OFF		*	LED			BO		73	41	2	Yes
10242	Uph-e>(>) Pickup L1 (Uph-e>(>) PU L1)	Voltage Prot.	OUT	*	ON OFF		*	LED			BO		73	42	2	Yes
10243	Uph-e>(>) Pickup L2 (Uph-e>(>) PU L2)	Voltage Prot.	OUT	*	ON OFF		*	LED			BO		73	43	2	Yes
10244	Uph-e>(>) Pickup L3 (Uph-e>(>) PU L3)	Voltage Prot.	OUT	*	ON OFF		*	LED			BO		73	44	2	Yes
10245	Uph-e> TimeOut (Uph-e> TimeOut)	Voltage Prot.	OUT	*	*		*	LED			BO					
10246	Uph-e>> TimeOut (Uph-e>> TimeOut)	Voltage Prot.	OUT	*	*		*	LED			BO					
10247	Uph-e>(>) TRIP command (Uph-e>(>) TRIP)	Voltage Prot.	OUT	*	ON		*	LED			BO		73	47	2	Yes
10248	Uph-e> Pickup L1 (Uph-e> PU L1)	Voltage Prot.	OUT	*	*		*	LED			BO					
10249	Uph-e> Pickup L2 (Uph-e> PU L2)	Voltage Prot.	OUT	*	*		*	LED			BO					
10250	Uph-e> Pickup L3 (Uph-e> PU L3)	Voltage Prot.	OUT	*	*		*	LED			BO					
10251	Uph-e>> Pickup L1 (Uph-e>> PU L1)	Voltage Prot.	OUT	*	*		*	LED			BO					
10252	Uph-e>> Pickup L2 (Uph-e>> PU L2)	Voltage Prot.	OUT	*	*		*	LED			BO					
10253	Uph-e>> Pickup L3 (Uph-e>> PU L3)	Voltage Prot.	OUT	*	*		*	LED			BO					
10255	Uph-ph> Pickup (Uphph> Pickup)	Voltage Prot.	OUT	*	ON OFF		*	LED			BO		73	55	2	Yes
10256	Uph-ph>> Pickup (Uphph>> Pickup)	Voltage Prot.	OUT	*	ON OFF		*	LED			BO		73	56	2	Yes
10257	Uph-ph>(>) Pickup L1-L2 (Uphph>(>)PU L12)	Voltage Prot.	OUT	*	ON OFF		*	LED			BO		73	57	2	Yes

No.	Description	Function	Type of Information	Log Buffers				Configurable in Matrix					IEC 60870-5-103			
				Event Log ON/OFF	Trip (Fault) Log ON/OFF	Ground Fault Log ON/OFF	Marked in Oscill. Record	LED	Binary Input	Function Key	Relay	Chatter Suppression	Type	information number	Data Unit	General Interrogation
10258	Uph-ph>(>) Pickup L2-L3 (Uphph>(>)PU L23)	Voltage Prot.	OUT	*	ON OFF		*	LED			BO		73	58	2	Yes
10259	Uph-ph>(>) Pickup L3-L1 (Uphph>(>)PU L31)	Voltage Prot.	OUT	*	ON OFF		*	LED			BO		73	59	2	Yes
10260	Uph-ph> TimeOut (Uphph> TimeOut)	Voltage Prot.	OUT	*	*		*	LED			BO					
10261	Uph-ph>> TimeOut (Uphph>> TimeOut)	Voltage Prot.	OUT	*	*		*	LED			BO					
10262	Uph-ph>(>) TRIP command (Uphph>(>) TRIP)	Voltage Prot.	OUT	*	ON		*	LED			BO		73	62	2	Yes
10263	Uph-ph> Pickup L1-L2 (Uphph> PU L12)	Voltage Prot.	OUT	*	*		*	LED			BO					
10264	Uph-ph> Pickup L2-L3 (Uphph> PU L23)	Voltage Prot.	OUT	*	*		*	LED			BO					
10265	Uph-ph> Pickup L3-L1 (Uphph> PU L31)	Voltage Prot.	OUT	*	*		*	LED			BO					
10266	Uph-ph>> Pickup L1-L2 (Uphph>> PU L12)	Voltage Prot.	OUT	*	*		*	LED			BO					
10267	Uph-ph>> Pickup L2-L3 (Uphph>> PU L23)	Voltage Prot.	OUT	*	*		*	LED			BO					
10268	Uph-ph>> Pickup L3-L1 (Uphph>> PU L31)	Voltage Prot.	OUT	*	*		*	LED			BO					
10270	3U0> Pickup (3U0> Pickup)	Voltage Prot.	OUT	*	ON OFF		*	LED			BO		73	70	2	Yes
10271	3U0>> Pickup (3U0>> Pickup)	Voltage Prot.	OUT	*	ON OFF		*	LED			BO		73	71	2	Yes
10272	3U0> TimeOut (3U0> TimeOut)	Voltage Prot.	OUT	*	*		*	LED			BO					
10273	3U0>> TimeOut (3U0>> TimeOut)	Voltage Prot.	OUT	*	*		*	LED			BO					
10274	3U0>(>) TRIP command (3U0>(>) TRIP)	Voltage Prot.	OUT	*	ON		*	LED			BO		73	74	2	Yes
10280	U1> Pickup (U1> Pickup)	Voltage Prot.	OUT	*	ON OFF		*	LED			BO		73	80	2	Yes
10281	U1>> Pickup (U1>> Pickup)	Voltage Prot.	OUT	*	ON OFF		*	LED			BO		73	81	2	Yes
10282	U1> TimeOut (U1> TimeOut)	Voltage Prot.	OUT	*	*		*	LED			BO					
10283	U1>> TimeOut (U1>> TimeOut)	Voltage Prot.	OUT	*	*		*	LED			BO					
10284	U1>(>) TRIP command (U1>(>) TRIP)	Voltage Prot.	OUT	*	ON		*	LED			BO		73	84	2	Yes

No.	Description	Function	Type of Information	Log Buffers				Configurable in Matrix					IEC 60870-5-103			
				Event Log ON/OFF	Trip (Fault) Log ON/OFF	Ground Fault Log ON/OFF	Marked in Oscill. Record	LED	Binary Input	Function Key	Relay	Chatter Suppression	Type	information number	Data Unit	General Interrogation
10290	U2> Pickup (U2> Pickup)	Voltage Prot.	OUT	*	ON OFF		*	LED			BO		73	90	2	Yes
10291	U2>> Pickup (U2>> Pickup)	Voltage Prot.	OUT	*	ON OFF		*	LED			BO		73	91	2	Yes
10292	U2> TimeOut (U2> TimeOut)	Voltage Prot.	OUT	*	*		*	LED			BO					
10293	U2>> TimeOut (U2>> TimeOut)	Voltage Prot.	OUT	*	*		*	LED			BO					
10294	U2>(>) TRIP command (U2>(>) TRIP)	Voltage Prot.	OUT	*	ON		*	LED			BO		73	94	2	Yes
10300	U1< Pickup (U1< Pickup)	Voltage Prot.	OUT	*	ON OFF		*	LED			BO		73	100	2	Yes
10301	U1<< Pickup (U1<< Pickup)	Voltage Prot.	OUT	*	ON OFF		*	LED			BO		73	101	2	Yes
10302	U1< TimeOut (U1< TimeOut)	Voltage Prot.	OUT	*	*		*	LED			BO					
10303	U1<< TimeOut (U1<< TimeOut)	Voltage Prot.	OUT	*	*		*	LED			BO					
10304	U1<(<) TRIP command (U1<(<) TRIP)	Voltage Prot.	OUT	*	ON		*	LED			BO		73	104	2	Yes
10310	Uph-e< Pickup (Uph-e< Pickup)	Voltage Prot.	OUT	*	ON OFF		*	LED			BO		73	110	2	Yes
10311	Uph-e<< Pickup (Uph-e<< Pickup)	Voltage Prot.	OUT	*	ON OFF		*	LED			BO		73	111	2	Yes
10312	Uph-e<(<) Pickup L1 (Uph-e<(<) PU L1)	Voltage Prot.	OUT	*	ON OFF		*	LED			BO		73	112	2	Yes
10313	Uph-e<(<) Pickup L2 (Uph-e<(<) PU L2)	Voltage Prot.	OUT	*	ON OFF		*	LED			BO		73	113	2	Yes
10314	Uph-e<(<) Pickup L3 (Uph-e<(<) PU L3)	Voltage Prot.	OUT	*	ON OFF		*	LED			BO		73	114	2	Yes
10315	Uph-e< TimeOut (Uph-e< TimeOut)	Voltage Prot.	OUT	*	*		*	LED			BO					
10316	Uph-e<< TimeOut (Uph-e<< TimeOut)	Voltage Prot.	OUT	*	*		*	LED			BO					
10317	Uph-e<(<) TRIP command (Uph-e<(<) TRIP)	Voltage Prot.	OUT	*	ON		*	LED			BO		73	117	2	Yes
10318	Uph-e< Pickup L1 (Uph-e< PU L1)	Voltage Prot.	OUT	*	*		*	LED			BO					
10319	Uph-e< Pickup L2 (Uph-e< PU L2)	Voltage Prot.	OUT	*	*		*	LED			BO					
10320	Uph-e< Pickup L3 (Uph-e< PU L3)	Voltage Prot.	OUT	*	*		*	LED			BO					

No.	Description	Function	Type of Information	Log Buffers				Configurable in Matrix					IEC 60870-5-103			
				Event Log ON/OFF	Trip (Fault) Log ON/OFF	Ground Fault Log ON/OFF	Marked in Oscill. Record	LED	Binary Input	Function Key	Relay	Chatter Suppression	Type	information number	Data Unit	General Interrogation
10321	Uph-e<< Pickup L1 (Uph-e<< PU L1)	Voltage Prot.	OUT	*	*		*	LED			BO					
10322	Uph-e<< Pickup L2 (Uph-e<< PU L2)	Voltage Prot.	OUT	*	*		*	LED			BO					
10323	Uph-e<< Pickup L3 (Uph-e<< PU L3)	Voltage Prot.	OUT	*	*		*	LED			BO					
10325	Uph-ph< Pickup (Uph-ph< Pickup)	Voltage Prot.	OUT	*	ON OFF		*	LED			BO		73	125	2	Yes
10326	Uph-ph<< Pickup (Uph-ph<< Pickup)	Voltage Prot.	OUT	*	ON OFF		*	LED			BO		73	126	2	Yes
10327	Uphph<(<) Pickup L1-L2 (Uphph<(<)PU L12)	Voltage Prot.	OUT	*	ON OFF		*	LED			BO		73	127	2	Yes
10328	Uphph<(<) Pickup L2-L3 (Uphph<(<)PU L23)	Voltage Prot.	OUT	*	ON OFF		*	LED			BO		73	128	2	Yes
10329	Uphph<(<) Pickup L3-L1 (Uphph<(<)PU L31)	Voltage Prot.	OUT	*	ON OFF		*	LED			BO		73	129	2	Yes
10330	Uphph< TimeOut (Uphph< TimeOut)	Voltage Prot.	OUT	*	*		*	LED			BO					
10331	Uphph<< TimeOut (Uphph<< TimeOut)	Voltage Prot.	OUT	*	*		*	LED			BO					
10332	Uphph<(<) TRIP command (Uphph<(<) TRIP)	Voltage Prot.	OUT	*	ON		*	LED			BO		73	132	2	Yes
10333	Uph-ph< Pickup L1-L2 (Uphph< PU L12)	Voltage Prot.	OUT	*	*		*	LED			BO					
10334	Uph-ph< Pickup L2-L3 (Uphph< PU L23)	Voltage Prot.	OUT	*	*		*	LED			BO					
10335	Uph-ph< Pickup L3-L1 (Uphph< PU L31)	Voltage Prot.	OUT	*	*		*	LED			BO					
10336	Uph-ph<< Pickup L1-L2 (Uphph<< PU L12)	Voltage Prot.	OUT	*	*		*	LED			BO					
10337	Uph-ph<< Pickup L2-L3 (Uphph<< PU L23)	Voltage Prot.	OUT	*	*		*	LED			BO					
10338	Uph-ph<< Pickup L3-L1 (Uphph<< PU L31)	Voltage Prot.	OUT	*	*		*	LED			BO					
30053	Fault recording is running (Fault rec. run.)	Osc. Fault Rec.	OUT	*	*		*	LED			BO					
31000	Q0 operationcounter= (Q0 OpCnt=)	Control Device	VI													
31001	Q1 operationcounter= (Q1 OpCnt=)	Control Device	VI													
31002	Q2 operationcounter= (Q2 OpCnt=)	Control Device	VI													

No.	Description	Function	Type of Information	Log Buffers				Configurable in Matrix					IEC 60870-5-103			
				Event Log ON/OFF	Trip (Fault) Log ON/OFF	Ground Fault Log ON/OFF	Marked in Oscill. Record	LED	Binary Input	Function Key	Relay	Chatter Suppression	Type	information number	Data Unit	General Interrogation
31008	Q8 operationcounter= (Q8 OpCnt=)	Control Device	VI													
31009	Q9 operationcounter= (Q9 OpCnt=)	Control Device	VI													

E.4 Group Indications

No.	Description	No.	Description
140	Error Sum Alarm	144	Error 5V
		181	Error A/D-conv.
		192	Error1A/5Awrong
		194	Error neutralCT
160	Alarm Sum Event	162	Failure Σ I
		163	Fail I balance
		165	Fail Σ U Ph-E
		167	Fail U balance
		168	Fail U absent
		169	VT FuseFail>10s
		170	VT FuseFail
		171	Fail Ph. Seq.
		177	Fail Battery
		183	Error Board 1
		184	Error Board 2
		185	Error Board 3
		186	Error Board 4
		187	Error Board 5
		188	Error Board 6
		189	Error Board 7
		190	Error Board 0
		191	Error Offset
		193	Alarm adjustm.
		361	>FAIL:Feeder VT
161	Fail I Superv.	162	Failure Σ I
		163	Fail I balance
164	Fail U Superv.	165	Fail Σ U Ph-E
		167	Fail U balance
		168	Fail U absent

E.5 Measured Values

No.	Description	Function	IEC 60870-5-103					Configurable in Matrix		
			Type	information number	Compatibility	Data Unit	Position	CFC	Control Display	Default Display
601	I L1 (IL1 =)	Measurement	94	148	No	9	1	CFC	CD	DD
			134	124	No	9	1			
602	I L2 (IL2 =)	Measurement	94	148	No	9	2	CFC	CD	DD
			134	124	No	9	2			
603	I L3 (IL3 =)	Measurement	94	148	No	9	3	CFC	CD	DD
			134	124	No	9	3			
610	3I0 (zero sequence) (3I0 =)	Measurement	134	124	No	9	14	CFC	CD	DD
619	I1 (positive sequence) (I1 =)	Measurement	-	-	-	-	-	CFC	CD	DD
620	I2 (negative sequence) (I2 =)	Measurement	-	-	-	-	-	CFC	CD	DD
621	U L1-E (UL1E=)	Measurement	94	148	No	9	4	CFC	CD	DD
			134	124	No	9	4			
622	U L2-E (UL2E=)	Measurement	94	148	No	9	5	CFC	CD	DD
			134	124	No	9	5			
623	U L3-E (UL3E=)	Measurement	94	148	No	9	6	CFC	CD	DD
			134	124	No	9	6			
624	U L12 (UL12=)	Measurement	134	124	No	9	10	CFC	CD	DD
625	U L23 (UL23=)	Measurement	134	124	No	9	11	CFC	CD	DD
626	U L31 (UL31=)	Measurement	134	124	No	9	12	CFC	CD	DD
627	Uen (Uen =)	Measurement	134	118	No	9	1	CFC	CD	DD
631	3U0 (zero sequence) (3U0 =)	Measurement	-	-	-	-	-	CFC	CD	DD
632	Measured value Usy2 (Usy2=)	Measurement	-	-	-	-	-	CFC	CD	DD
633	Ux (separate VT) (Ux =)	Measurement	-	-	-	-	-	CFC	CD	DD
634	U1 (positive sequence) (U1 =)	Measurement	-	-	-	-	-	CFC	CD	DD
635	U2 (negative sequence) (U2 =)	Measurement	-	-	-	-	-	CFC	CD	DD
636	Measured value U-diff (Usy1-Usy2) (Udiff =)	Measurement	130	1	No	9	2	CFC	CD	DD
637	Measured value Usy1 (Usy1=)	Measurement	130	1	No	9	3	CFC	CD	DD
638	Measured value Usy2 (Usy2=)	Measurement	130	1	No	9	1	CFC	CD	DD
641	P (active power) (P =)	Measurement	94	148	No	9	7	CFC	CD	DD
			134	124	No	9	7			
642	Q (reactive power) (Q =)	Measurement	94	148	No	9	8	CFC	CD	DD
			134	124	No	9	8			
643	Power Factor (PF =)	Measurement	134	124	No	9	13	CFC	CD	DD
644	Frequency (Freq=)	Measurement	94	148	No	9	9	CFC	CD	DD
			134	124	No	9	9			
645	S (apparent power) (S =)	Measurement	-	-	-	-	-	CFC	CD	DD
646	Frequency fsy2 (F-sy2 =)	Measurement	130	1	No	9	4	CFC	CD	DD
647	Frequency difference (F-diff=)	Measurement	130	1	No	9	5	CFC	CD	DD

No.	Description	Function	IEC 60870-5-103					Configurable in Matrix		
			Type	information number	Compatibility	Data Unit	Position	CFC	Control Display	Default Display
648	Angle difference (φ-diff=)	Measurement	130	1	No	9	6	CFC	CD	DD
649	Frequency fsy1 (F-sy1 =)	Measurement	130	1	No	9	7	CFC	CD	DD
684	U0 (zero sequence) (U0 =)	Measurement	134	118	No	9	2	CFC	CD	DD
888	Pulsed Energy Wp (active) (Wp(puls))	Energy	133	55	No	205	-	CFC	CD	DD
889	Pulsed Energy Wq (reactive) (Wq(puls))	Energy	133	56	No	205	-	CFC	CD	DD
924	Wp Forward (Wp+=)	Energy	133	51	No	205	-	CFC	CD	DD
925	Wq Forward (Wq+=)	Energy	133	52	No	205	-	CFC	CD	DD
928	Wp Reverse (Wp-=)	Energy	133	53	No	205	-	CFC	CD	DD
929	Wq Reverse (Wq-=)	Energy	133	54	No	205	-	CFC	CD	DD

Literature

/1/ SIPROTEC 4 System Description
E50417-H1100-C151-B6

/2/ SIPROTEC DIGSI, Start UP
E50417-G1100-C152-A3

/3/ DIGSI CFC, Manual
E50417-H1100-C098-B2

/4/ SIPROTEC SIGRA 4, Manual
E50417-H1100-C070-A7

Glossary

Bay controllers

Bay controllers are devices with control and monitoring functions without protective functions.

Bit pattern indication

Bit pattern indication is a processing function by means of which items of digital process information applying across several inputs can be detected together in parallel and processed further. The bit pattern length can be specified as 1, 2, 3 or 4 bytes.

BP_xx

→ Bit pattern indication (Bitstring Of x Bit), x designates the length in bits (8, 16, 24 or 32 bits).

Buffer battery

The buffer battery ensures that specified data areas, flags, timers and counters are retained retentively.

C_xx

Command without feedback

CF_xx

Command with feedback

CFC

Continuous Function Chart. CFC is a graphical editor with which a program can be created and configured by using ready-made blocks.

CFC blocks

Blocks are parts of the user program delimited by their function, their structure or their purpose.

Chatter ON

A rapidly intermittent input (for example, due to a relay contact fault) is switched off after a configurable monitoring time and can thus not generate any further signal changes. The function prevents overloading of the system when a fault arises.

Combination devices

Combination devices are bay devices with protection functions and a control display.

Combination matrix

From DIGSI V4.6 onward, up to 32 compatible SIPROTEC 4 devices can communicate with one another in an Inter Relay Communication combination (IRC combination). Which device exchanges which information is defined with the help of the combination matrix.

Communication branch

A communications branch corresponds to the configuration of 1 to n users that communicate by means of a common bus.

Communication reference CR

The communication reference describes the type and version of a station in communication by PROFIBUS.

Component view

In addition to a topological view, SIMATIC Manager offers you a component view. The component view does not offer any overview of the hierarchy of a project. It does, however, provide an overview of all the SIPROTEC 4 devices within a project.

COMTRADE

Common Format for Transient Data Exchange, format for fault records.

Container

If an object can contain other objects, it is called a container. The object Folder is an example of such a container.

Control Display

The display which is displayed on devices with a large (graphic) display after you have pressed the control key is called the control display. It contains the switchgear that can be controlled in the feeder with status display. It is used to perform switching operations. Defining this display is part of the configuration.

Data pane

The right-hand area of the project window displays the contents of the area selected in the → navigation window, for example indications, measured values, etc. of the information lists or the function selection for the device configuration.

DCF77

The extremely precise official time is determined in Germany by the "Physikalisch-Technische-Bundesanstalt PTB" in Braunschweig. The atomic clock station of the PTB transmits this time via the long-wave time-signal transmitter in Mainflingen near Frankfurt/Main. The emitted time signal can be received within a radius of approx. 1,500 km from Frankfurt/Main.

Device container

In the Component View, all SIPROTEC 4 devices are assigned to an object of type Device container. This object is a special object of DIGSI Manager. However, since there is no component view in DIGSI Manager, this object only becomes visible in conjunction with STEP 7.

Double command

Double commands are process outputs which indicate 4 process states at 2 outputs: 2 defined (for example ON/OFF) and 2 undefined states (for example intermediate positions)

Double-point indication

Double-point indications are items of process information which indicate 4 process states at 2 inputs: 2 defined (for example ON/OFF) and 2 undefined states (for example intermediate positions).

DP

→ Double-point indication

DP_I

→ Double point indication, intermediate position 00

Drag and drop

Copying, moving and linking function, used at graphics user interfaces. Objects are selected with the mouse, held and moved from one data area to another.

Earth

The conductive earth whose electric potential can be set equal to zero at every point. In the area of earth electrodes the earth can have a potential deviating from zero. The term "Earth reference plane" is often used for this state.

Earth (verb)

This term means that a conductive part is connected via an earthing system to the → earth.

Earthing

Earthing is the total of all means and measures used for earthing.

Electromagnetic compatibility

Electromagnetic compatibility (EMC) is the ability of an electrical apparatus to function fault-free in a specified environment without influencing the environment unduly.

EMC

→ Electromagnetic compatibility

ESD protection

ESD protection is the total of all the means and measures used to protect electrostatic sensitive devices.

EVA

Limiting value, user-defined

ExBPxx

External bit pattern indication via an ETHERNET connection, device-specific → Bit pattern indication

ExC

External command without feedback via an ETHERNET connection, device-specific

ExCF

Command with feedback via an ETHERNET connection, device-specific

ExDP

External double point indication via an ETHERNET connection, device-specific → Double point indication

ExDP_I

External double point indication via an ETHERNET connection, intermediate position 00, device-specific → Double point indication

ExMV

External metered value via an ETHERNET connection, device-specific

ExSI

External single point indication via an ETHERNET connection, device-specific → Single point indication

ExSI_F

External single point indication via an ETHERNET connection, Spontaneous event, device-specific → Fleeting indication, → Single point indication

Field devices

Generic term for all devices assigned to the field level: Protection devices, combination devices, bay controllers.

Fleeting Indication

Fleeting indications are single-point indications present for a very short time, in which only the coming of the process signal is logged and further processed time-correctly.

FMS communication branch

Within an FMS communication branch, the users communicate on the basis of the PROFIBUS FMS protocol via a PROFIBUS FMS network.

Folder

This object type is used to create the hierarchical structure of a project.

General interrogation (GI)

During the system start-up the state of all the process inputs, of the status and of the fault image is sampled. This information is used to update the system-end process image. The current process state can also be sampled after a data loss by means of a GI.

GOOSE message

GOOSE messages (Generic Object Oriented Substation Event) according to IEC 61850 are data packets which are transferred event-controlled via the Ethernet communication system. They serve for direct information exchange among the relays. This mechanism implements cross-communication between bay units.

GPS

Global Positioning System. Satellites with atomic clocks on board orbit the earth twice a day on different paths in approx. 20,000 km. They transmit signals which also contain the GPS universal time. The GPS receiver determines its own position from the signals received. From its position it can derive the delay time of a satellite signal and thus correct the transmitted GPS universal time.

Hierarchy level

Within a structure with higher-level and lower-level objects a hierarchy level is a container of equivalent objects.

HV field description

The HV project description file contains details of fields which exist in a ModPara-project. The actual field information of each field is stored in a HV field description file. Within the HV project description file, each field is allocated such a HV field description file by a reference to the file name.

HV project description

All the data is exported once the configuration and parameterization of PCUs and sub-modules using ModPara has been completed. This data is split up into several files. One file contains details about the fundamental project structure. This also includes, for example, information detailing which fields exist in this project. This file is called a HV project description file.

ID

Internal double point indication → Double point indication

ID_S

Internal double point indication, intermediate position 00 → Double point indication

IEC

International Electrotechnical Commission, international standardization body

IEC61850

International communication standard for communication in substations. The objective of this standard is the interoperability of devices from different manufacturers on the station bus. An Ethernet network is used for data transfer.

IEC address

Within an IEC bus a unique IEC address has to be assigned to each SIPROTEC 4 device. A total of 254 IEC addresses are available for each IEC bus.

IEC communication branch

Within an IEC communication branch the users communicate on the basis of the IEC60-870-5-103 protocol via an IEC bus.

Initialization string

An initialization string comprises a range of modem-specific commands. These are transmitted to the modem within the framework of modem initialization. The commands can, for example, force specific settings for the modem.

Inter relay communication

→ IRC combination

IntSP

Internal single point indication → Single point indication

IntSP_Ev

Internal indication Spontaneous event → Fleeting indication, → Single point indication

IRC combination

Inter Relay Communication, IRC, is used for directly exchanging process information between SIPROTEC 4 devices. You require an object of type IRC combination to configure an inter relay communication. Each user of the combination and all the necessary communication parameters are defined in this object. The type and scope of the information exchanged between the users is also stored in this object.

IRIG B

Time signal code of the Inter-Range Instrumentation Group

ISO 9001

The ISO 9000 ff range of standards defines measures used to assure the quality of a product from the development stage to the manufacturing stage.

LFO-Filter

(Low-Frequency-Oscillation) Filter for low frequency oscillations

Link address

The link address gives the address of a V3/V2 device.

List view

The right window section of the project window displays the names and icons of objects which represent the contents of a container selected in the tree view. Because they are displayed in the form of a list, this area is called the list view.

LPS

Line Post Sensor

LV

Limiting value

Master

Masters may send data to other users and request data from other users. DIGSI operates as a master.

Metered value

Metered values are a processing function with which the total number of discrete similar events (counting pulses) is determined for a period, usually as an integrated value. In power supply companies the electrical work is usually recorded as a metered value (energy purchase/supply, energy transportation).

MLFB

MLFB is the abbreviation for "MaschinenLesbare FabrikateBezeichnung" (machine-readable product designation). This is the equivalent of an order number. The type and version of a SIPROTEC 4 device is coded in the order number.

Modem connection

This object type contains information on both partners of a modem connection, the local modem and the remote modem.

Modem profile

A modem profile consists of the name of the profile, a modem driver and may also comprise several initialization commands and a user address. You can create several modem profiles for one physical modem. To do so you need to link various initialization commands or user addresses to a modem driver and its properties and save them under different names.

Modems

Modem profiles for a modem connection are stored in this object type.

MV

Measured value

MVMV

Metered value which is formed from the measured value

MVT

Measured value with time

MVU

Measured value, user-defined

Navigation pane

The left pane of the project window displays the names and symbols of all containers of a project in the form of a folder tree.

Object

Each element of a project structure is called an object in DIGSI.

Object properties

Each object has properties. These might be general properties that are common to several objects. An object can also have specific properties.

Off-line

In offline mode a connection to a SIPROTEC 4 device is not required. You work with data which are stored in files.

On-line

When working in online mode, there is a physical connection to a SIPROTEC 4 device. This connection can be implemented as a direct connection, as a modem connection or as a PROFIBUS FMS connection.

OUT

Output Indication

OUT_Ev

Output indication Spontaneous event→ Fleeting indication

Parameterization

Comprehensive term for all setting work on the device. The parameterization is done with DIGSI or sometimes also directly on the device.

Parameter set

The parameter set is the set of all parameters that can be set for a SIPROTEC 4 device.

Phone book

User addresses for a modem connection are saved in this object type.

PMV

Pulse metered value

Process bus

Devices with a process bus interface allow direct communication with SICAM HV modules. The process bus interface is equipped with an Ethernet module.

PROFIBUS

PROcess FIeld BUS, the German process and field bus standard, as specified in the standard EN 50170, Volume 2, PROFIBUS. It defines the functional, electrical, and mechanical properties for a bit-serial field bus.

PROFIBUS address

Within a PROFIBUS network a unique PROFIBUS address has to be assigned to each SIPROTEC 4 device. A total of 254 PROFIBUS addresses are available for each PROFIBUS network.

Project

Content-wise, a project is the image of a real power supply system. Graphically, a project is represented as a number of objects which are integrated in a hierarchical structure. Physically, a project consists of a number of directories and files containing project data.

Protection devices

All devices with a protective function and no control display.

Reorganizing

Frequent addition and deletion of objects results in memory areas that can no longer be used. By reorganizing projects, you can release these memory areas again. However, a cleanup also reassigns the VD addresses. The consequence is that all SIPROTEC 4 devices have to be reinitialized.

RIO file

Relay data Interchange format by Omicron.

RSxxx-interface

Serial interfaces RS232, RS422/485

Service interface

Rear serial interface on the devices for connecting DIGSI (for example, via modem).

SICAM PAS (Power Automation System)

Substation control system: The range of possible configurations spans from integrated standalone systems (SICAM PAS and M&C with SICAM PAS CC on one computer) to separate hardware for SICAM PAS and SICAM PAS CC to distributed systems with multiple SICAM Station Units. The software is a modular system with basic and optional packages. SICAM PAS is a purely distributed system: the process interface is implemented by the use of bay units / remote terminal units.

SICAM Station Unit

The SICAM Station Unit with its special hardware (no fan, no rotating parts) and its Windows XP Embedded operating system is the basis for SICAM PAS.

SICAM WinCC

The SICAM WinCC operator control and monitoring system displays the state of your network graphically, visualizes alarms, interrupts and indications, archives the network data, offers the possibility of intervening manually in the process and manages the system rights of the individual employee.

Single command

Single commands are process outputs which indicate 2 process states (for example, ON/OFF) at one output.

Single point indication

Single indications are items of process information which indicate 2 process states (for example, ON/OFF) at one output.

SIPROTEC

The registered trademark SIPROTEC is used for devices implemented on system base V4.

SIPROTEC 4 device

This object type represents a real SIPROTEC 4 device with all the setting values and process data it contains.

SIPROTEC 4 Variant

This object type represents a variant of an object of type SIPROTEC 4 device. The device data of this variant may well differ from the device data of the original object. However, all variants derived from the original object have the same VD address as the original object. For this reason they always correspond to the same real SIPROTEC 4 device as the original object. Objects of type SIPROTEC 4 variant have a variety of uses, such as documenting different operating states when entering parameter settings of a SIPROTEC 4 device.

Slave

A slave may only exchange data with a master after being prompted to do so by the master. SIPROTEC 4 devices operate as slaves.

SP

→ Single point indication

SP_W

→ Single point indication Spontaneous event → Fleeting indication, → Single point indication

System interface

Rear serial interface on the devices for connecting to a substation controller via IEC or PROFIBUS.

TI

Transformer Tap Indication

Time stamp

Time stamp is the assignment of the real time to a process event.

Topological view

DIGSI Manager always displays a project in the topological view. This shows the hierarchical structure of a project with all available objects.

Transformer Tap Indication

Transformer tap indication is a processing function on the DI by means of which the tap of the transformer tap changer can be detected together in parallel and processed further.

Tree view

The left pane of the project window displays the names and symbols of all containers of a project in the form of a folder tree. This area is called the tree view.

Ungrounded

Without any electrical connection to → ground.

User address

A user address comprises the name of the user, the national code, the area code and the user-specific phone number.

Users

From DIGSI V4.6 onward , up to 32 compatible SIPROTEC 4 devices can communicate with one another in an Inter Relay Communication combination. The individual participating devices are called users.

VD

A VD (Virtual Device) includes all communication objects and their properties and states that are used by a communication user through services. A VD can be a physical device, a module of a device or a software module.

VD address

The VD address is assigned automatically by DIGSI Manager. It exists only once in the entire project and thus serves to identify unambiguously a real SIPROTEC 4 device. The VD address assigned by DIGSI Manager must be transferred to the SIPROTEC 4 device in order to allow communication with DIGSI Device Editor.

VFD

A VFD (Virtual Field Device) includes all communication objects and their properties and states that are used by a communication user through services.

VI

VI stands for Value Indication.

Index

Symbols

(Fail Conductor) 133

1,2,3 ...

26, 37, 149, 235, 236, 248, 254

A

AC Voltage 226
Acknowledgement of Commands 174
Adaptive Dead Time 235
Adaptive dead time (ADT) 60
ADC offset 131
Analogue Inputs 226
Asymmetrical measuring voltage failure 142
Automatic reclosing commands 164
Automatic reclosure
    1-pole reclose cycle 49
    1-pole/3-pole Reclose Cycle 49
    Circuit breaker auxiliary contacts 48
    Circuit breaker test 152
Automatic Reclosure 44
Automatic reclosure function
    3-pole reclose cycle 48
    Action Times 46
    Control 52
    Initiation 46
    Operating modes 47
Auxiliary and Reference Voltages 131
Auxiliary Voltage 182, 226

B

Binary Inputs 227
Binary Outputs 161
Buffer battery 131
Busbar tripping 215

C

C-I/O-4 Input/Output Board
    188
Change Group 36
Changing Setting Group 179
Check:
    Direction 216
    Polarity of the Voltage Input 217
    Switching Test of Operating Equipment 221
Checking:
    Time Synchronisation Interface 209
Checking: System Connections 205
Circuit breaker
    Closing time 35
    Malfunction 123
    position logic 151
    Test 35
    Tripping check 221
Circuit Breaker
    Detection Position 151
    Measuring the Operating Time 219
    Test Program 159
Circuit breaker auxiliary contacts 117
Circuit breaker failure protection 115, 125
    End fault protection 247
    Pole discrepancy supervision 247
    Times 247
Circuit Breaker Failure Protection 247
    Circuit breaker monitoring 247
    Initiation conditions 247
Circuit breaker not operational 128
Circuit breaker status 38
Climatic Stress Tests 233
Closing under asynchronous system conditions 89
Closing under synchronous system conditions 88
Closure Detection 149
Command Execution 170, 170
Command Output 175
Command Path 169
Common phase initiation 118
Communication 21
Communication Interfaces 228
Configuring the Automatic Reclosing Function 59
Configuring the functional scope 26
Construction 234
Control Device 173
Control Logic 173

Control Voltage 186
Control Voltage BI1 to BI5 186
Control Voltage for Binary Inputs 182, 227
Counters and Memories 164
Cubicle Mounting 200, 257
Cubicle Mounting Panel flush mounting 256
Current flow monitoring 116
Current Inputs 226
Current Symmetry 133

D

Dead line check 60
Dead Line Check 235
Default displays 161
Delay times- single-stage/two-stage circuit breaker failure protection 122
Deployment Conditions 234
Dialog Box 212
Direct Voltage 226
Directional Check with Load Current 216

E

Electrical Tests 231
EMC Tests for Interference Emission (Type Test) 232
EMC Tests for Interference Immunity (Type Tests) 231
EN100-Module
    Interface selection 42
End fault protection 124, 128
End fault stage 71
Energy Metering 167
Event buffer 162
Exchanging Interfaces 183

F

Fault Annunciations 29
Fault Indications 163
Fault Logging 254
Fault record 162
Fault recording 41
Fault Recording 20, 255
Feedback monitoring 175
Final Preparation of the Device 223
Forced three-pole trip 59
Function Blocks 250
Fuse-Failure-Monitor 134, 142

G

General Interrogation 164

H

High current stages Iph>>, 3I0>> 76
High set current stage I>> 69
Humidity 234

I

IEC 61850 GOOSE (inter-device communication) 255
Indications 162
Information to a Control Centre 162
Input/Output Board
    C-I/O-11 194
Input/output module
    C-I/O-2 190
Instantaneous tripping
    before automatic reclosure 73
Insulation Test 231
Integrated Display 161
Interlocking 170
Interrupted currents 164
Inverse Time Stages (time overcurrent protection)
    IEC Curve 240
Inverse Time Stages (Time Overcurrent Protection)
    ANSI-Characteristic 241

L

Life contact 182
Limiting with user defined functions 251
Limits for CFC blocks 251
Line data 38

M

Malfunction Reaction 140
Measured Value Acquisition
    Currents 132
    Voltages 132
Measured values 69, 248
Measured voltage failure monitoring 136, 142
Mechanical Tests 233
Memory Components 131
Monitoring Phase Angle 138
Mounting: Panel Mounting 202

N

Non-energized switching 88

O

One-pole dead time 154
Open Pole Detektor 153
Operating modes of the closing check 87
Operating state change 212
Operating Time of the Circuit Breaker 219
Operational Indication Buffer 254
Operational Indications 163
Operational measured values 254
Operator Interface
Control 203
Optical Fibres 205
Ordering Information 260
Oscillographic Recording for Test 221
Output Relay Binary Outputs 227
Output Relays 161
Overcurrent stage
I (inverse) 70
I> (independent) 70
Overcurrent Stages
3I0> (Definite-time Overcurrent Protection) 77
3I0p (Inverse-time Overcurrent Protection with ANSI Characteristics) 79
3I0p (Inverse-time Overcurrent Protection with IEC Characteristics) 78
Ip (Inverse-time Overcurrent Protection with ANSI Characteristics) 79
Ip (Inverse-time Overcurrent Protection with IEC Characteristics) 78
Iph> (Definite-time Overcurrent Protection) 77
Overview diagrams 266
overvoltage protection
any single-phase voltage 245
zero-sequence system 3 245
Overvoltage protection
Negative sequence system 99, 108, 244
Phase-to-earth 107, 244
Phase-to-phase 98, 107, 244
positive sequence system 107, 244
Positive sequence system 99
Zero-sequence system 108
Zero-sequence system 3 100

P

Panel flush mounting 257
Panel Mounting 202, 258
Phase Angle Monitoring 142
Phase-segregated initiation - Circuit breaker failure protection 119
Pickup Logic of the Entire Device 155
Pickup/tripping logic 74
Polarity Check
Current Input 219
Polarity Check:
Voltage Input 217
Pole discrepancy supervision 125, 128
Power Supply 226
Power System Data 1 31

R

Rack Mounting 200
Rated Currents 182
Rated frequency 35
Reading/Setting/Resetting 164
Real Time Clock and Buffer Battery 255
Reclose cycle 61, 62, 63
Reclosure
Blocking 47
Multiple 50
Reduced dead time 60
Reduced Dead Time 235
Reset of Stored LED / Relays 29
Retrievable Indications 163
Retrieving Parameters 167

S

Sampling frequency 131
Scope of Functions 26
Service Interface
Test 203
Service/Modem Interface 228
Setting Groups 36
Changing 179
Single-stage circuit breaker failure protection 127
Specifications 231
Spontaneous Displays 163
Spontaneous Fault Messages 28
Spontaneous Indications 163
Stage Iph>>> 79
Standard Interlocking 171
Start Test Measurement Recording 221
Sum Monitoring 142
Supervision with binary input 147
Supply Voltage 226
Switching
onto a fault 73
Switching (Interlocked/non-interlocked) 171
Switching Statistics 255
Switching Test of the Configured Operating Equipment 221

Symmetry monitoring 142
Synchro check 83
Synchro Check 243
Δ measurement 243
Asynchronous power conditions 243
Operating Modes 243
Synchronous power conditions 243
Voltages 243
Synchronism conditions for automatic reclosure 91
Synchronism conditions for manual closure and control command 91
System Interface 228

T

Temperatures 233
Terminal Assignments 266
Terminating interfaces with bus capability 183
Termination 204
Test
Circuit-breaker failure protection 213
Test Mode 209
Test:
Binary inputs 213
Current and voltage connection 215
Indication Direction 211
LEDs 213
Operator Interface 203
Output relay 212
Phase Rotation 216
Polarity Check for the Current Input I 219
Service Interface 203
Signal transmission (Breaker Failure Protection /End Fault Protection) 220
Switching states of the binary Inputs/Outputs 211
System interface 209
Termination 204
Time Synchronization Interface 204
User Defined Functions 220
VT miniature circuit breaker 216
Test: System interface 203
Test:Command Direction 211
Three-phase measuring voltage failure 142
Time Overcurrent Protection
Characteristic Curves 236
High-set Current Stages 239
Operating Modes 236
Overcurrent Stages 240
Stub Fault Protection 241
Time Synchronisation Interface 231
Time Synchronization Interface 204
Transfer trip to the remote end circuit breaker 124
Transmission Block 209
Trip Circuit Supervision 180, 249
Trip command duration 35
Trip-Dependent Indications 28
Tripping Logic of the Entire Device 155
Trips 164
Two-stage circuit breaker failure protection 126
Type of Commands 169
Type of Contact for Output Relays 183

U

Under and over voltage protection 244
Undervoltage
positive sequence system 105
Undervoltage protection
Phase to-phase 245
phase-to-earth 109
Phase-to-earth 102, 245
phase-to-phase 109
Phase-to-phase 104
positive sequence system 110
Positive sequence system 245
User-defined Functions 250

V

Vibration and Shock Resistance during Stationary Operation 233
Vibration and Shock Resistance during Transport 233
Voltage Inputs 226
Voltage measuring inputs 32
Voltage Phase Sequence 134
Voltage Symmetry 134

W

Watchdog 133

Z

Zero-voltage stages for single-phase voltage 102