STOWAWAY

Tailgates By THIEMAN

Model ST-40

OWNERS MANUAL/PARTS LIST

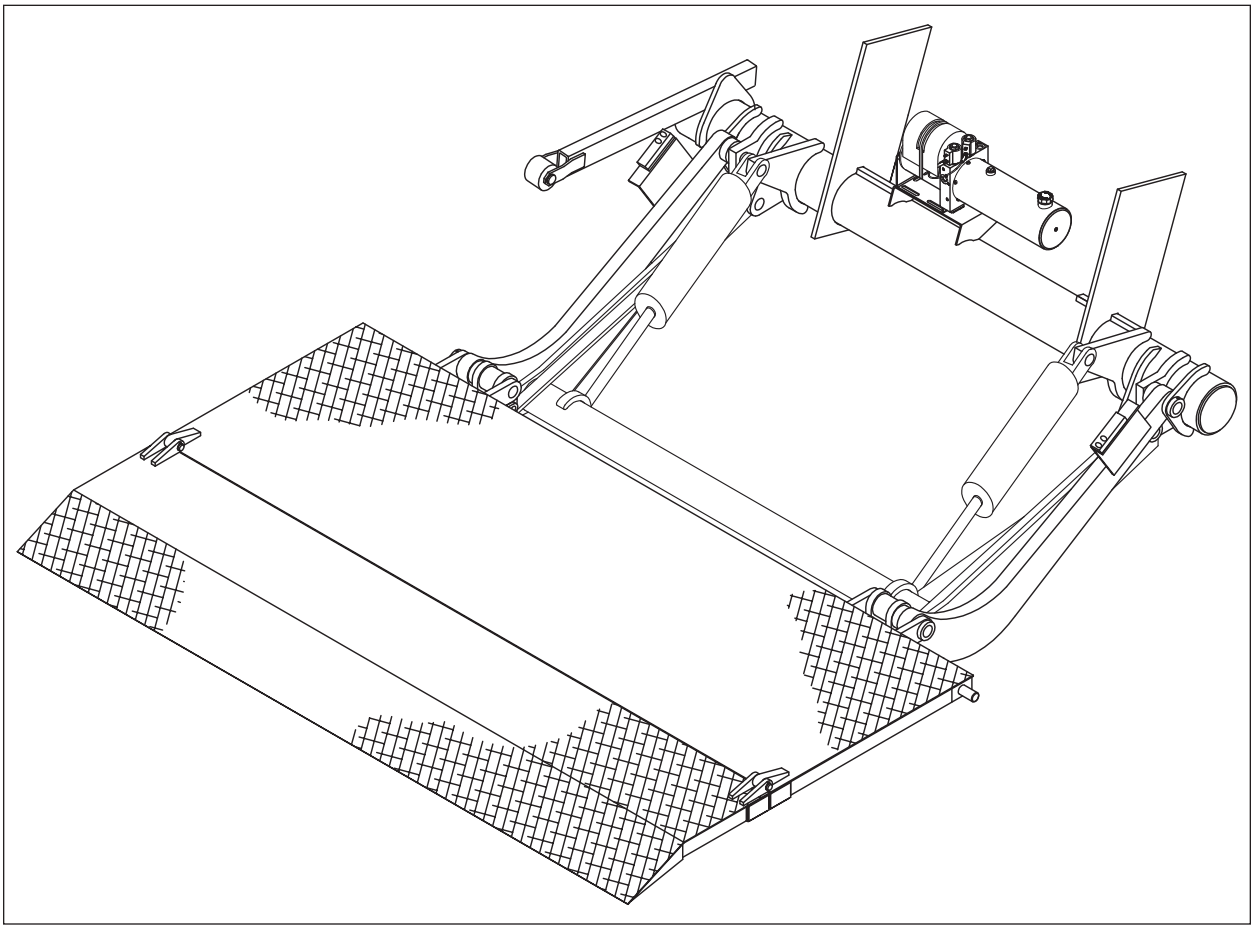

⚠ IMPORTANT! KEEP IN VEHICLE!

PLEASE READ AND UNDERSTAND THE CONTENTS OF THIS MANUAL BEFORE OPERATING THE EQUIPMENT.

NTEA THE ASSOCIATION FOR THE WORK TRUCK INDUSTRY MEMBER

THIEMAN
TAILGATES, INC.
600 East Wayne Street
Celina, Ohio 45822
Phone: 419-586-7727 Fax: 419-586-9724

TABLE OF CONTENTS

PAGE

PARTS ORDERING PROCEDURE 2
WARNINGS.....3
OPERATING INSTRUCTIONS.....4
MAINTENANCE GUIDE.....5
SEMI-ANNUAL INSPECTION.....6
ELECTRICAL PICTORIAL 7
INSPECTION AND LOCATION OF DECALS.....7
TRUNNION, LIFT ARM, AND IDLER ARM ASSEMBLY.....8
PLATFORM ASSEMBLY - STANDARD.....9
PLATFORM ASSEMBLY - FULL TAPER.....10
SPACER ASSEMBLY 11
PUMP ASSEMBLY - TOGGLE & PUSHBUTTON CONTROL 12
PUMP PARTS 13
SNUBBER KIT 14
TROUBLESHOOTING GUIDE.....15-18

FOR YOUR RECORDS

Model No. _____ Date Purchased _____
Serial No. _____
NOTE: WHEN ORDERING PARTS BE SURE TO INCLUDE THIS INFORMATION!

PARTS ORDERING PROCEDURE

When ordering parts, include all the information asked for below. If this information is not available, a complete written description or sketch of the required part will help Thieman identify and deliver the needed part to you.

THE FOLLOWING INFORMATION MUST BE INCLUDED:

1. Serial Number – Thieman liftgate serial numbers can be found on the tag located on the right hand mounting plate.
2. Model Number and Capacity.
3. Platform Size and Material – Steel or Aluminum.
4. Part Number.
5. Description.
6. Quantity required.

WARNING: POSITION LOADS PROPERLY ON PLATFORM

NEVER off-center the load on the platform, from side to side or away from truck as this may overload the liftgate. The center of weight of the load should NEVER be placed beyond the center of the platform load surface, away from truck. Loads should be placed close to the platform edge nearest truck. If a load is not uniformly distributed, then the heaviest portion should be closest to the edge of the platform nearest the truck. NEVER allow any part of the load to extend beyond the edges of the platform.

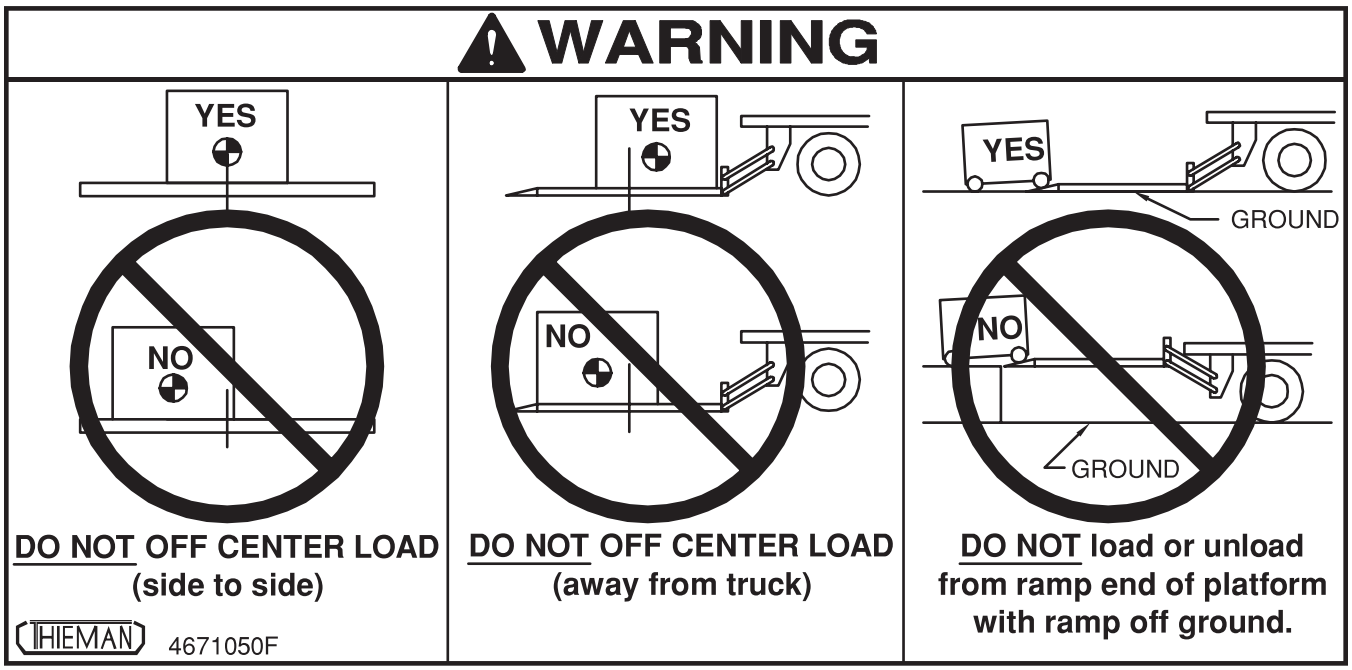

WARNING!

The following list of warnings are to be read before operating the ST series liftgate.

+Read this Owners Manual and all of the decals on the liftgate BEFORE operating the liftgate.
+All protective covers and guards must be in place before operating the liftgate.
+DO NOT operate the liftgate if you do not have a thorough knowledge and understanding of the operation of the liftgate.
+NEVER OVERLOAD THE LIFTGATE. The maximum rated capacity of the ST40 series liftgate is 4000 lbs (8440 +10 Platform) or 3300 lbs (8452 Full Taper Platform).
+Never use the liftgate if it makes any unusual noises, has vibrations, or fails to operate freely.
+Make certain that the area below the platform is clear before and at all times during the operation of the liftgate.
+Keep hands and feet clear of all pinch points.
+The platform must be in the closed position and the latches properly engaged before transit.
+Always load as close to the center of the platform and as close to the vehicle as possible. See figure 1.
+Never operate lift trucks on or over any part of the platform.
+Load and unload the platform from the rear and not from the side of the platform.
+Only operate liftgate when vehicle is on level ground and the parking brake is set.
+Follow the maintenance guide as outlined in this manual.
+DO NOT attempt any repairs unless you are a qualified to do so.
+If any repairs, adjustments, or maintenance not covered in this manual are required, contact your nearest Thieman distributor or the factory.
+DO NOT ride the liftgate, it is not intended as a personnel lift.

+This liftgate is intended for the use of loading and unloading cargo only, and is not to be used for anything other than this.
+DO NOT modify this liftgate. Altering this liftgate may cause serious personal injury or damage the liftgate and will void all warranties.

OPERATING INSTRUCTIONS

CAUTION

Be sure to operate liftgate at a safe distance and never improperly load platform as this may cause personal injury or damage to the liftgate.

UNFOLDING OF PLATFORM

1. Raise the platform by pushing toggle switch up until stow bolts on platform are off the spacer latches.
2. Move spacer handle to position 1 to disengage spacer latches.
3. While spacer handle is in position 1 lower the platform by pushing toggle switch down until lift arms contact the ground. (Once stow bolts are clear of latches the spacer handle can be released back to position 2.)
4. Grasp platform handle on curb side and rotate outward to horizontal position.

RAISING OF PLATFORM

5. Push switch up to raise platform to bed height.

LOWERING OF PLATFORM

6. Push switch down to lower platform to ground.

CLOSING OF PLATFORM

7. Lower platform to ground.
8. Fold over extension and grasp platform handle to raise manually to vertical position.
9. Push switch up to raise completely until stow pins and spacer latches have engaged for stowing.

THERMAL DATA: To avoid overheating the motor do not operate this unit for more than 5 cycles/10 minutes with the maximum load. The motor then must be allowed to completely cool down to ambient temperature before cycling the lift again. This unit also has a 10% duty cycle, which means the liftgate can be cycle no more than 2 cycles/10 minutes constantly with a maximum load.

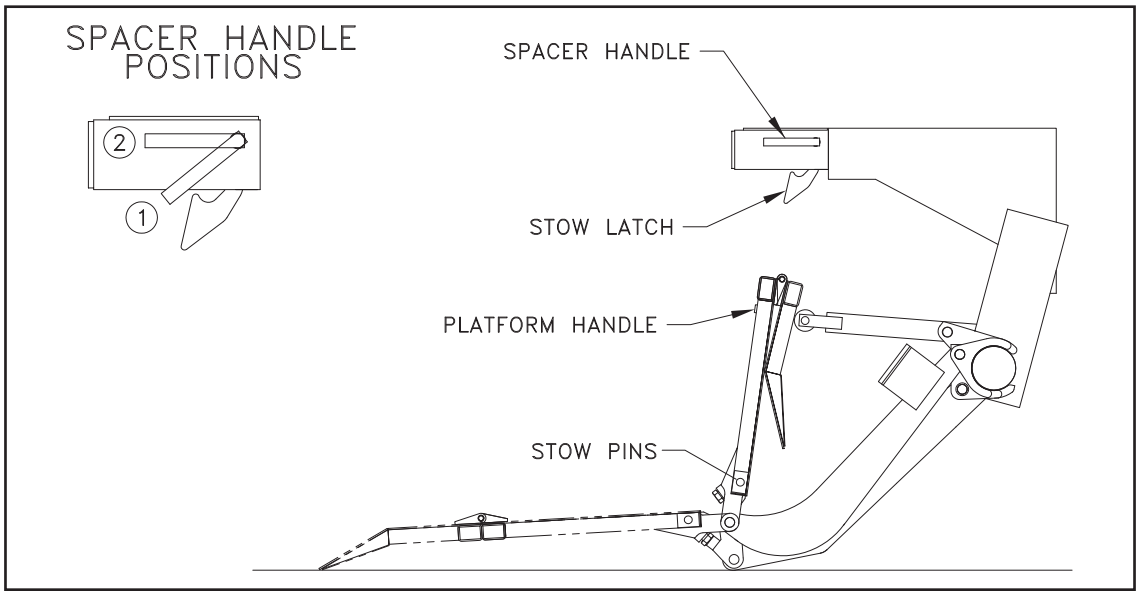

MAINTENANCE GUIDE

The following inspection and maintenance operations should be performed at the recommended intervals or anytime the liftgate shows signs of abuse, and improper or abnormal operation.

MONTHLY INSPECTION AND MAINTENANCE

Operate the liftgate throughout its entire operational cycle and check the following:

1. Check that there are no unusual noises or vibrations.
2. Check that the ramp tip and the pivot strike the ground at the same time. If the ramp tip strikes the ground before the bottom of the adjusting pivot does, adjust the leveling screw out until properly adjusted. See figure 2.
3. Check platform height relative to the spacer. If platform is lower, adjust cylinder with a 13/16 wrench to obtain necessary height.
4. Check for apparent damage to the liftgate such as bent or distorted members, any cracked welds, which may have resulted from overloading or abuse.
5. Check for any excessive wear or missing or deformed retainers in the following areas:
   A. Platform hinge, lift arm and idler arm pins and bushings
   B. All cylinder pins and bolts and bushings
   C. If gap between pin and bushing exceeds 1/32, the bushing should be replaced.
6. Check that the platform pivot pins are in place and retained by their proper retainers.
7. Check that all protective covers and guards are properly in place and secured.
8. Check painted finish, if in poor condition, then repaint. Any rusted parts should be replaced.
9. Check condition of non-painted parts, replace if corrosion exists.
10. Check snubbers, while platform is in stored position, to make sure they are bearing down on platform. If not, they should be replaced.
11. Check for oil leaks in these areas:
    A. Lift cylinder
    B. Hydraulic hose - replace if it shows signs of wear or cracking.
    C. Hydraulic fittings - tighten or replace as may be required to stop leakage.

FIG. 2

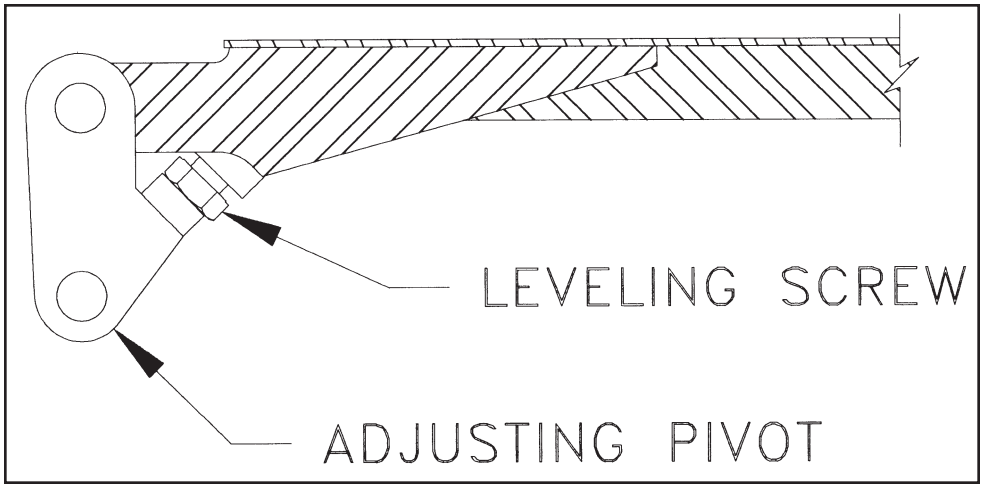

12. Check the oil level in the hydraulic reservoir. With the liftgate in the stowed position, the oil should be within 1/2 inch from the top of the reservoir. See chart below for oil applications.
13. Check that all wiring and battery cable connections are tight and free of corrosion.
14. Lubrication of the ST 40 series liftgate should be as follows for all user conditions:

Area of Tailgate	Type of Lubrication	Frequency
spacer latches	SAE 10 to SAE 20 oil	50 cycles
pump oil change	see chart below	yearly

*The pivot points of the ST 40 have special bushings which do not require lubrication.

HYDRAULIC FLUID CHART	
Temperature Range	Acceptable Fluids
-75 to 165°F	Exxon Univis J-26
-20 to 130°F	Dexron III Exxon Superflo ATF Shell Spirax S3 ATF MD3
-50 to 80°F	Shell Aero Fluid 4 Mobil Aero HFA Exxon Univis J-13 MIL H-5606

15. Check the pump relief pressure and also the motor amperage at this pressure. These values should be as follows:

Model	Max Amp Draw	Relief Pressure (psi)
ST40	255	2650

Semi-Annual Inspection

1. Perform the procedures outlined in the “Monthly Inspection and Maintenance.”
2. Inspect pump motor by:
   A. Disconnecting battery cable
   B. Remove motor end cover
   C. Examine the armature brushes for wear. (Brushes should be replaced if they are less than 1/8” long.)
   D. Clean all residue out from inside of the motor housing.
   E. Apply several drops of light weight machine oil to the armature shaft bearing in the motor end cover and reassemble the motor end cover.
3. If the hydraulic oil in the reservoir is dirty:
   A. Unfold platform and lower platform to the ground. Raise platform to bed height so cylinders are fully retracted. Support platform in this position with a lift truck or crane.
   B. Drain the oil from the hydraulic system and flush the entire system.
   C. Remove reservoir from pump and clean suction line filter. Also, clean out any contaminants inside reservoir. Remount reservoir when completed.
   D. Replace the oil as outlined in Section 9 under Monthly Maintenance and Inspection.

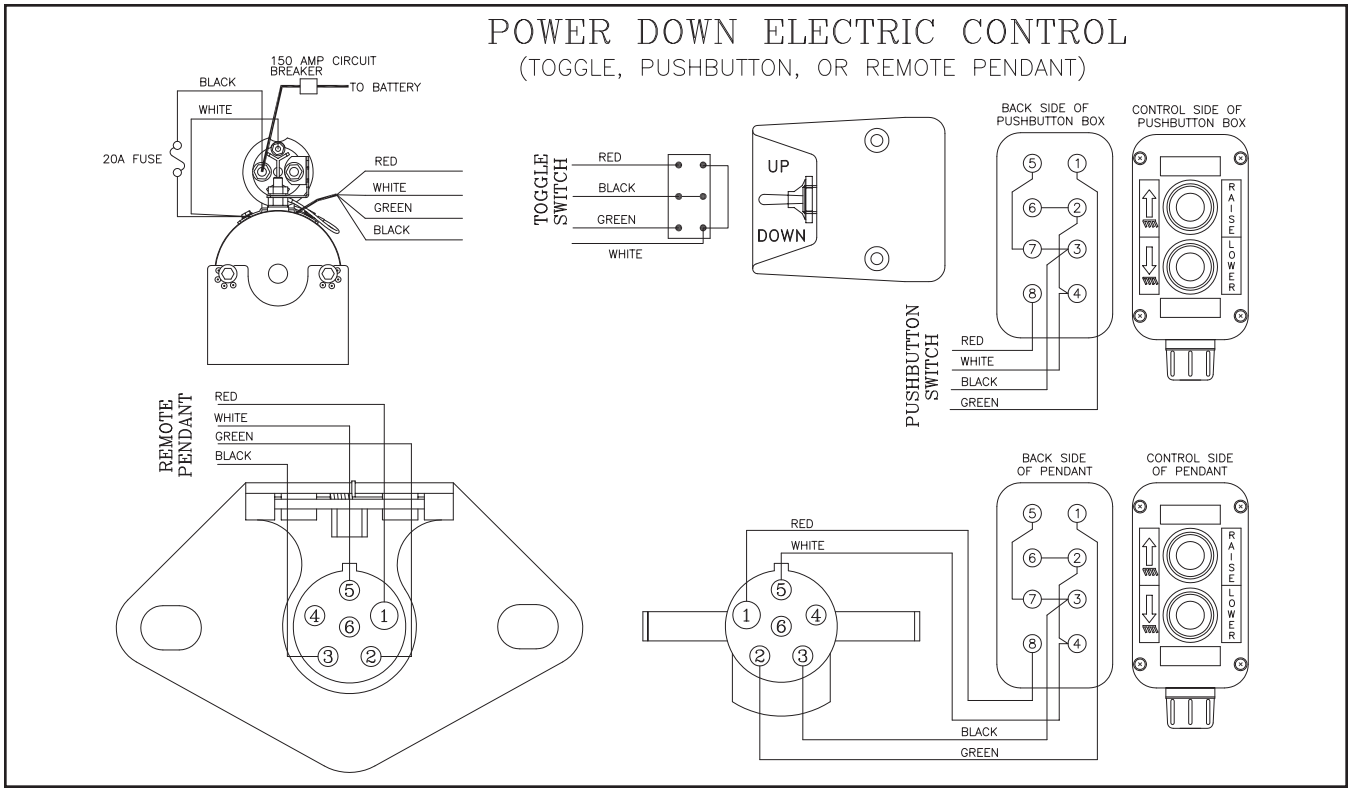

INSPECTION AND LOCATION OF DECALS

Item	Part Name	Part Number
1	Warning Decal - off center	4671050
2	PTO Decal	4650140
2	Fast Idle Decal	4650150
3	Danger Decal - no riding	4609
4	Operating Decal	4606
5	Capacity Decal:4000#	4650130
5	Capacity Decal:3300#	4607-019
6	Warning Decal (2)	4604
7	Warning Decal	4650530
8	Caution Decal - working area	4650770
9	Handle Decal	4605
10	Warning Decal-High Pressure	4620
11	Wiring Decal	4614
12	Reflector (3)	5705
13	Toggle Switch Decal	4650820

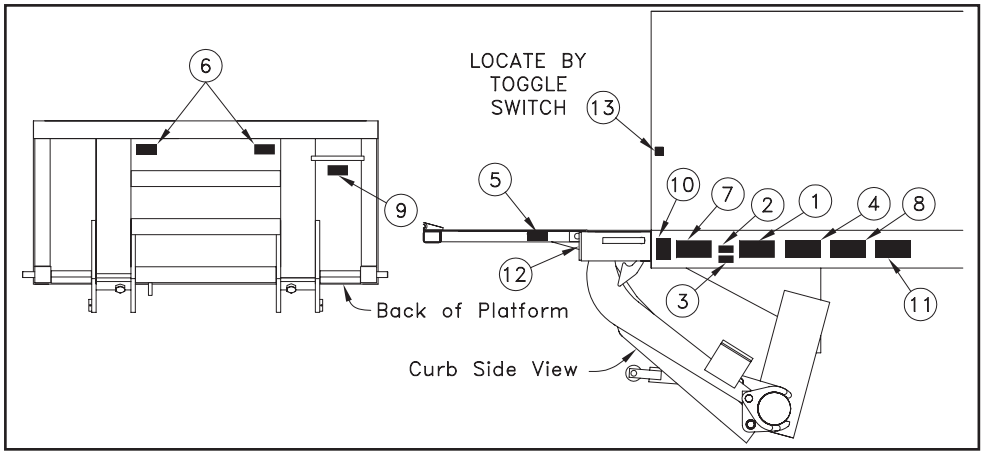

TRUNNION, LIFT ARM, AND IDLER ARM ASSEMBLY			
Item	**Part Description**	**Part Number**	**Qty.**
1	Trunnion asm	3166	1
2	Lift arm asm	3175	1
3	Idler arm asm RH	3179-002	1
4	Idler arm asm LH	3179-001	1
5	Pin	5005	4
6	Spring Pin-.25	5708-001	8
7	Roller	5775	1
8	Retaining ring	5781008	2
9	Pin	5001400	1
10	Pin	5004	2
11	Pin	5007	1
12	Pin	5006	1
13	Bushing	5504-001	4
14	Bushing	5504-002	6
15	Bushing	5504-003	2
16	Screw	8449646	4
17	Wear Pad	5702242	2
*18	Rubber Bumper	5702290	2
*19	Locknut .31	9413447	2
*20	Screw .31 x 2.50	8180091	2
*21	Flatwasher .25	8120386	4

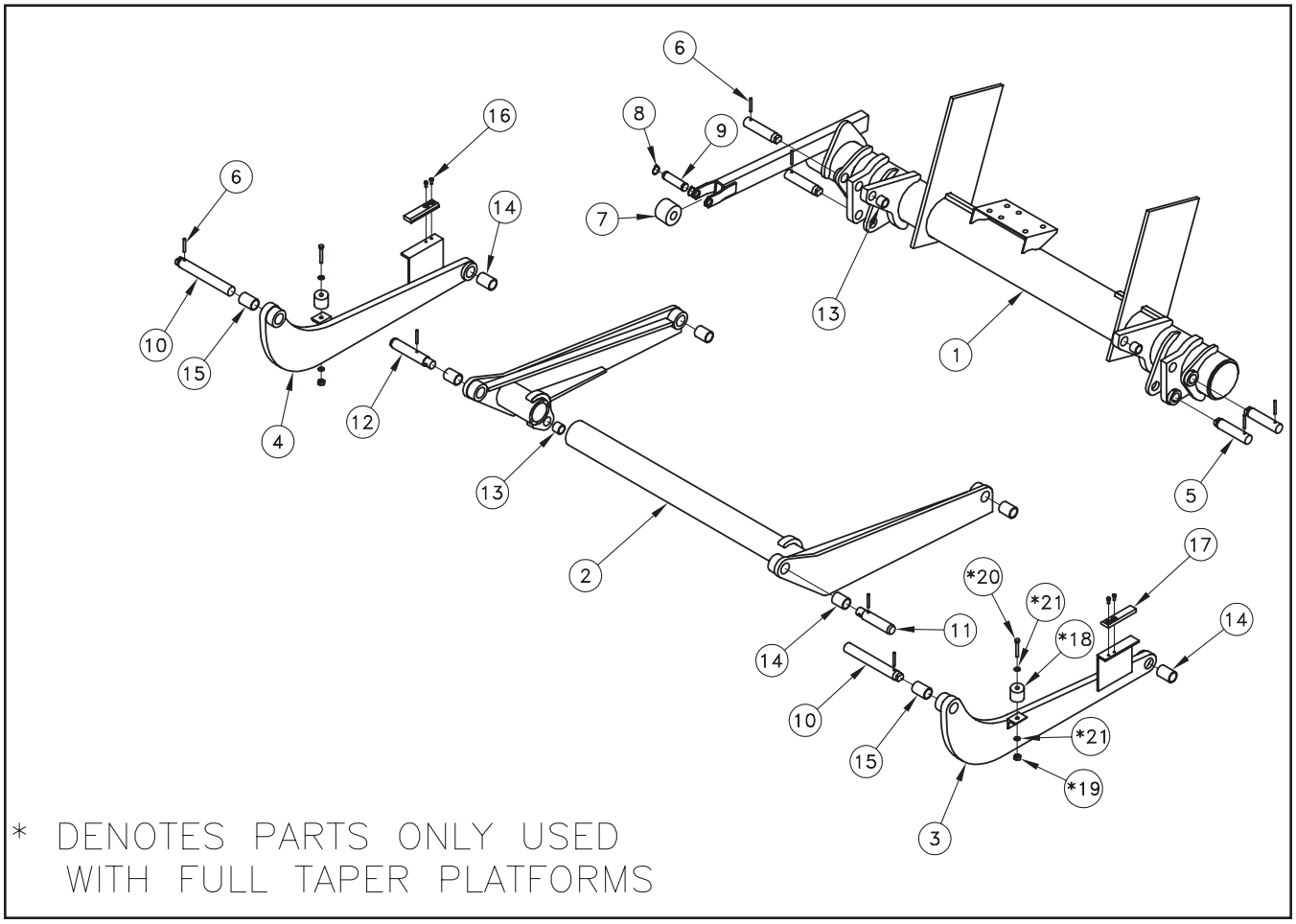

PLATFORM ASSEMBLY - STANDARD 4000#			
Item	**Part Description**	**Part Number**	**Qty.**
1	Platform asm 8440+10 Items 2,3,4,5,6,7,18	3413	1
2	Platform main section	31126	1
3	Platform extension	31124-001	1
4	Pin	5056	2
5	Retaining ring	5781017	4
6	Screw 1.00-8 x 2.25	8271856	2
7	Nut-1.00	8426899	2
8	Hinge weldment RH	3165-002	1
9	Spring lever weldment	31755-002	1
10	Lockwasher-.50	8120384	1
11	Screw .50-13 x 1.50	8100-014	1
12	Torsion bar	5100-001	1
13	Clevis pin	5794001	2
14	Link	2364	2
15	Spring pin	5708-005	2
16	Spring lever	31120	1
17	Hinge weldment LH	3165-001	1
18	Flatwasher .62	8107-011	2
19	Bushing	5504-004	2
20	Flatwasher .50	8120396	1

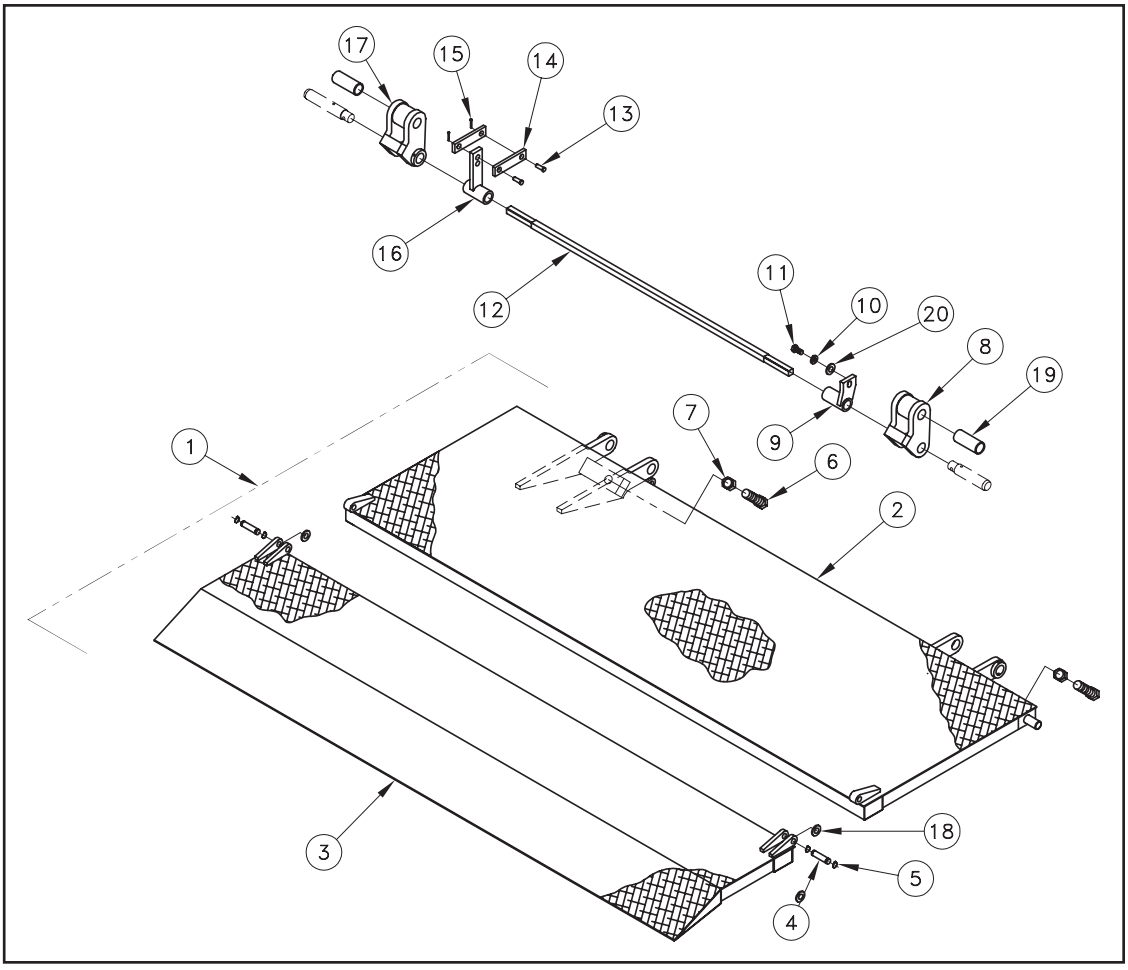

PLATFORM ASSEMBLY - FULL TAPER 3300#			
Item	**Part Description**	**Part Number**	**Qty.**
1	Platform asm 8452 Items 2,3,4,5,6,7,18	3414	1
2	Platform main section	31632-002	1
3	Platform extension	31682-002	1
4	Shoulder Bolt .62	8119	2
5	Locknut .50	9414074	4
6	Screw 1.00-8 x 2.25	8271856	2
7	Nut-1.00	8426899	2
8	Hinge weldment RH	31039-002	1
9	Spring lever weldment	31755-001	1
10	Lockwasher-.50	8120384	1
11	Screw .50-13 x 1.50	8100-014	1
12	Torsion bar	5100-001	1
13	Clevis pin	5794001	2
14	Link	2364	2
15	Spring pin	5708-005	2
16	Spring lever	31120	1
17	Hinge weldment LH	31039-001	1
18	Lockwasher .50	8106-008	2
19	Bushing	5504-004	2
20	Flatwasher .62	8107-011	2
21	Lockwasher .62	8106-009	2
22	Bushing	5504-013	2
23	Flatwasher .50	8120396	1

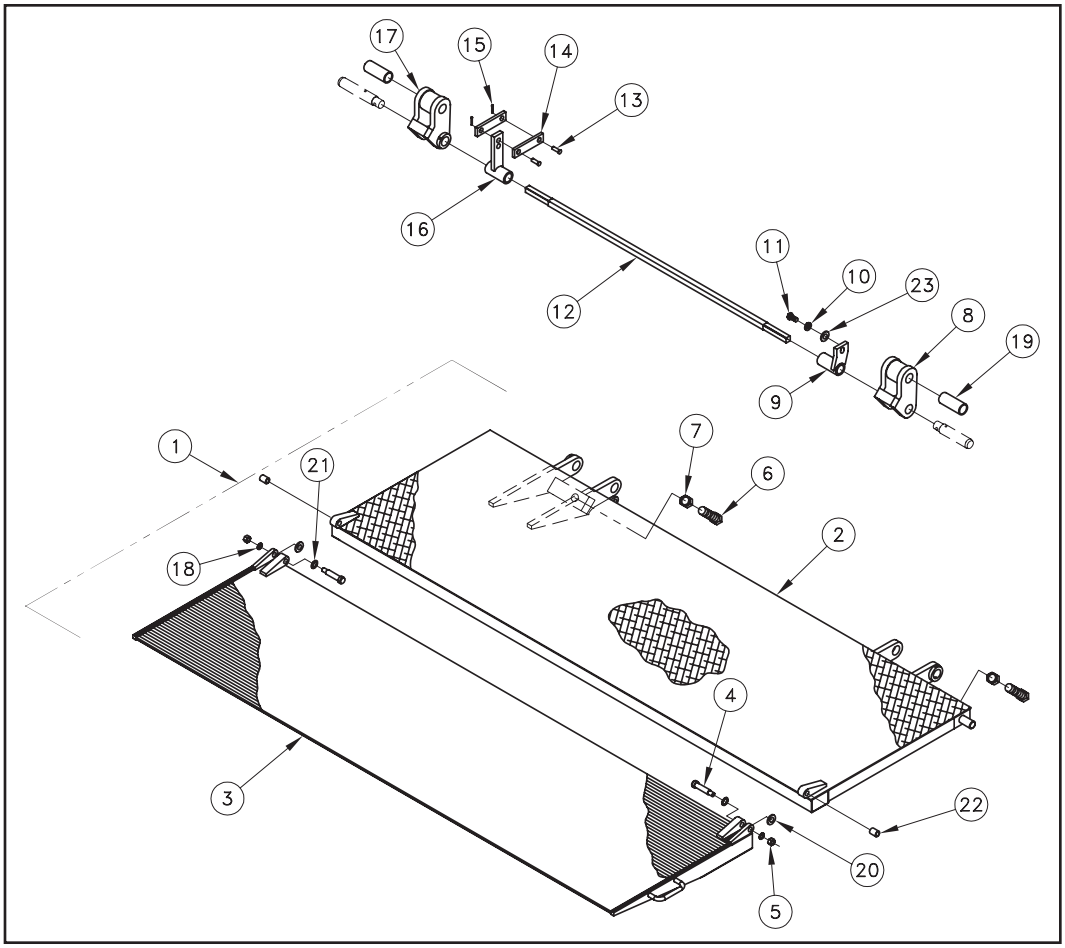

SPACER ASSEMBLY			
Item	**Part Description**	**Part Number**	**Qty.**
1	Spacer Asm. Items 2 to 7	31556	1
2	Control shaft	31549-002	1
3	Handle grip	5701043	1
4	Latch RH	3192-002	1
5	Latch LH	3192-001	1
6	Spring	5101100	2

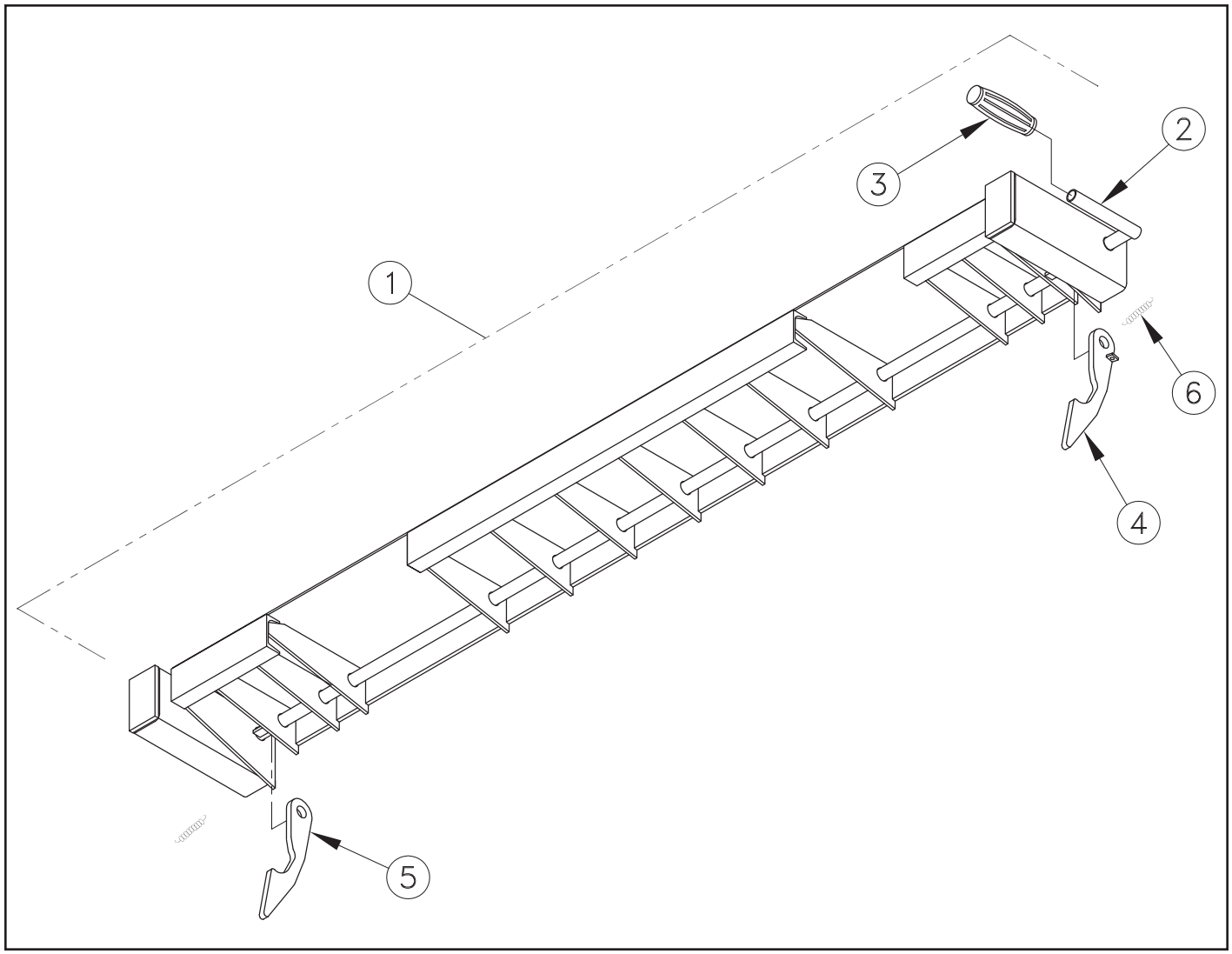

PUMP ASSEMBLY - TOGGLE AND PUSHBUTTON CONTROL

Item	Part Description	Part Number	Qty.
1	Pump asm Items 2 to 6	4404	1
2	Pump bracket	4421420	1
3	Breather cap	4420410	1
4	Motor 8111	4423520	1
5	Solenoid	4468	1
6	Toggle Switch Asm	31445	1
7	Cover	5704	1
8	Strap	5700100	1
9	Elbow MJ-MAORB	4930-001	2
10	Hose 51.00	4950-007	3
11	Flow control-1.25GPM	4948-007	2
12	Elbow MAORB-MAORB	4936-001	2
13	Retaining ring	5781008	8
14	Pin	5009	4
15	Cylinder 3 x 10.38	4295	2
16	Battery cable 2 GA. x 25’	4300030	1
17	Cable lug	4350	1
18	Cable retainer	5701260	4
19	Bolt .38-16 x 1.50	8180126	5
20	Internal Tooth Lockwasher-.38	8106-010	10
21	Nut-.38	8120377	5
22	Flatwasher-.38	8120388	4
23	Screw .31 x 1	8104-006	1
24	Screw #10 x .75	8111-005	2
25	Hose 63.00	4950-008	1
26	Tee MJ-MJ-MAORB	4932-001	1
27	Heat shrink	4319-002	1
28	Circuit Breaker-150A	4301770	1
29	Cable asm-2 GA. x 2’	4318-001	1
30	Straight Adapter MJ-MORB	4941-001	2
31	Pushbutton control	4422860	1
32	45° Elbow MAORB-FJS	4938-001	1
33	Branch Tee MJ-MJ-MJ	4953-001	1
34	Ground Cable #2 x 2'	4318-002	1

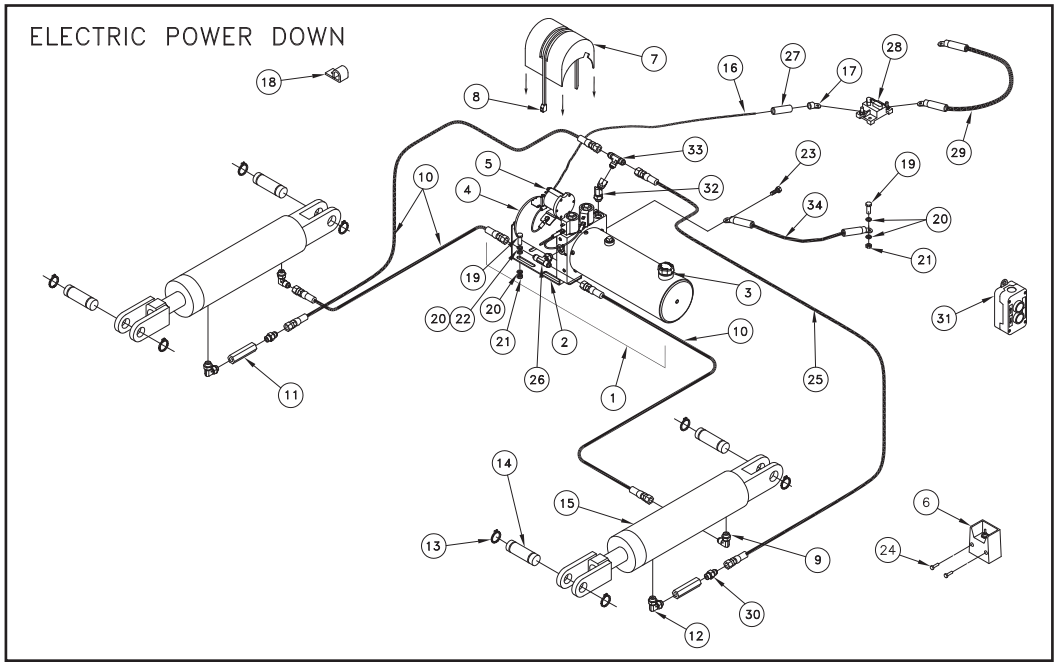

4404 PUMP PARTS			
Item	**Part Number**	**Part Description**	**Qty./Model**
1	4423520	Motor 8111	1
2	4439	Pump and Reservoir Only	1
3	4420410	Breather Cap	1
4	4480	Buss Bar	1
5	4421520	Bearing	1
6	4421530	Seal	1
7	8109-012	Screw .25 x .75	2
8	4421420	Bracket	1
9	4468	Solenoid	1
10	4421600	O-Ring	2
11	4452	Solenoid Coil Only	2
12	4445	Solenoid Valve Asm (lower)	1
13	4438	Solenoid Valve Asm (raise)	1
14	4457	Reservoir Ø4.50 x 12.00	1
15	4421660	Self Tap Screw #10 x .38	6

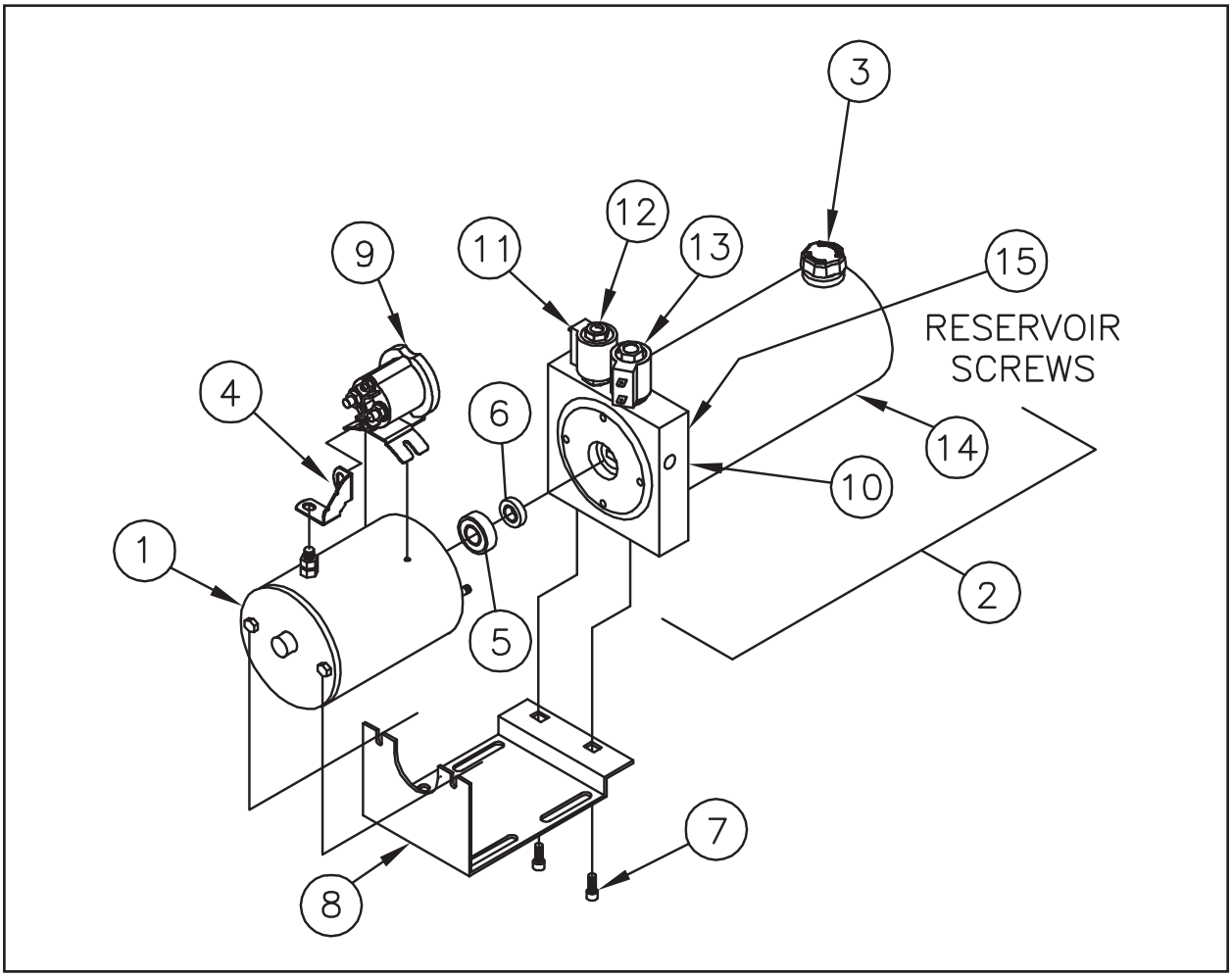

SNUBBER KIT 172			
Item	**Part Description**	**Part Number**	**Qty.**
	Snubber Kit Items 1 to 6	3735330	1
1	Snubber	5702290	2
2	Mounting Angle	2019033	2
3	Locknut .31-18	9413447	2
4	Flat Washer .31	8120386	4
5	Base Plate	23049-001	2
6	Screw .31-18	8180091	2

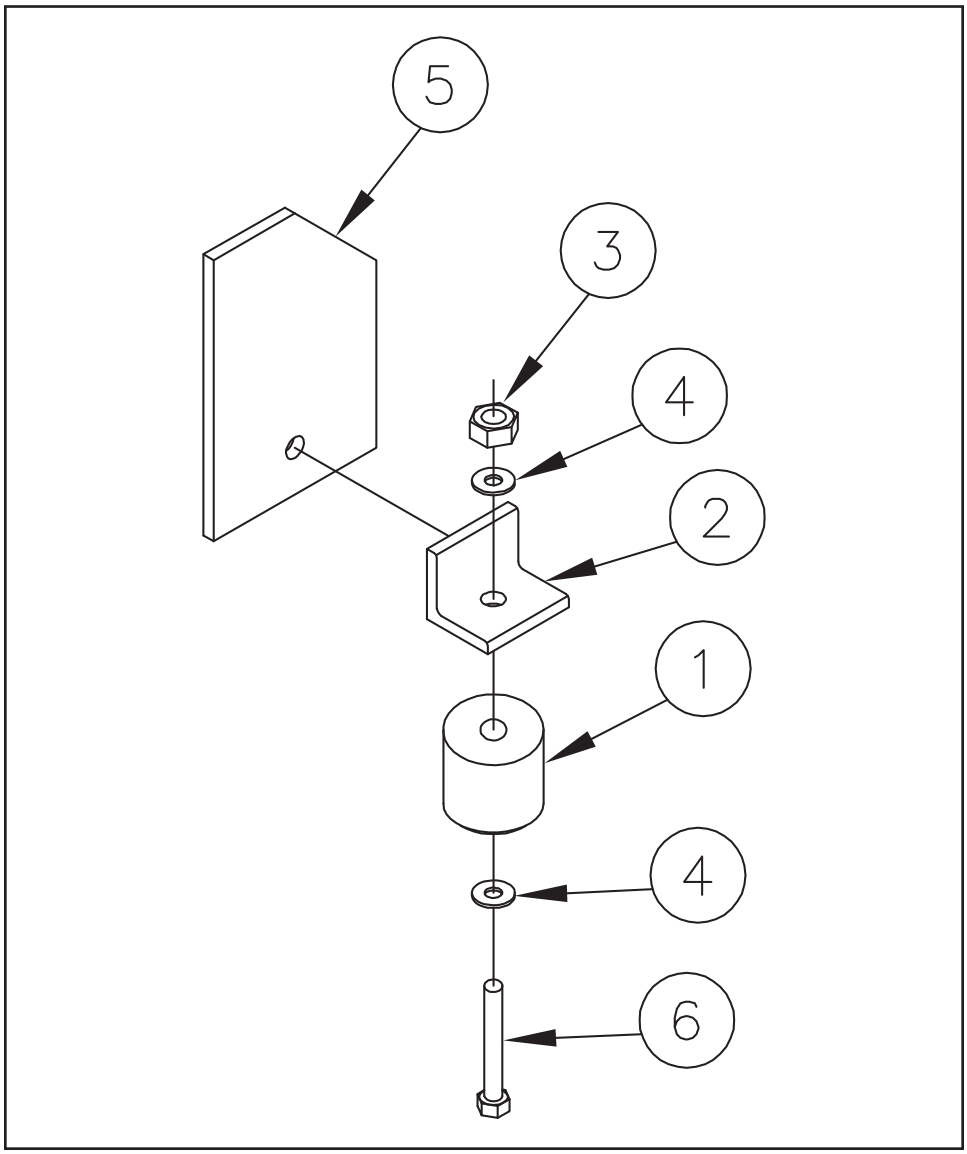

TROUBLESHOOTING GUIDE

ST40EST

Test Equipment: 1. 0-5000 psi pressure gauge
2. DC voltmeter/ohm meter
3. DC amp meter
4. standard mechanics tools

Note: Please refer to the electrical diagrams and hose connection drawings in the liftgate's owners manual when troubleshooting. This guide is only for standard Thieman liftgates. Special liftgates with options other than those in the owner's manual will require special diagrams for troubleshooting. Read and understand this entire guide completely before doing any troubleshooting. Certain listed problems may be related to other problems listed so a comprehensive knowledge is required before proceeding.

1. Problem – Pump motor will not run in the raise or lower mode

Causes – a. Tripped circuit breaker
b. Blown 20A fuse
c. Defective or undercharged battery(ies)
d. Improper battery cable connection or improper ground connection
e. Defective or improperly wired raise switch
f. Defective or improperly wired lower switch
g. Defective or improperly wired solenoid start switch
h. Defective pump motor

Corrections – a. Reset the circuit breaker located within 2ft of the liftgate supply battery(ies).
b. Replace 20A fuse
c. The "at rest" voltage for the batteries without the engine running and under no load should be at least 12.5V. The minimum voltage between the motor stud and ground is 9V at maximum load conditions. If proper voltage is not present, charge or replace the batteries. The battery(ies) on the vehicle should be that which has a minimum 150 amp reserve capacity.
d. Trace battery and ground cable connections to locate improper connection(s). Make sure the ground cable is installed going from the aluminum pump base to bare metal on the truck frame. Make sure the ground cable from the batteries to the frame is a heavy 2 ga. cable and that it too is connected to bare metal on the frame. Make sure there is 12.5V present at the large terminal on the motor start solenoid where the 2ga. cable from the batteries is connected. Replace any damaged cables and repair any bad connections.
e. Check for voltage on the black wire at the control switch. If no voltage is present the black wire from the motor start solenoid is loose or broken and needs repaired. If voltage is present then check for voltage at the green and white wire on the switch with the switch in the "RAISE" position. If no voltage is present, replace the switch.
f. If the pump motor runs in the "RAISE" position but will not run in the "DOWN" position, then check for voltage on the white and red wire at the switch. If no voltage is present replace the switch.
g. Check for voltage on the white wire at the motor start switch when the switch is activated.
If no voltage exists the white wire is loose or broken between the switch and the motor start solenoid. Check that the purple ground wire on the start solenoid is connected properly and there are no bad connections. If there is voltage on the white wire and the coil does not energize or if there is no voltage present at the motor terminal then replace the start switch.

h. With the switch activated in the “RAISE” or “LOWER” position and the motor start solenoid is activated, check for voltage at the motor terminal. If voltage is present and the motor is not running, replace the motor.

2. Problem – Liftgate will not raise to bed with a load and the pump motor running

Causes – a. Low hydraulic fluid
b. Cylinders are plumbed incorrectly to pump
c. Overload condition
d. Defective raise solenoid coil or valve
e. Improperly adjusted or defective main relief valve
f. Lift cylinders are bypassing, liftgate is drifting down
g. Broken hydraulic line
h. Clogged or disconnected suction line
i. Defective pump

Corrections - a. Make sure the reservoir has the proper amount of fluid. Either check for the fluid line through the plastic reservoir or for metal reservoirs remove the breather cap and check the fluid line through the fill hole. The hydraulic fluid should be within 1/2” of the top of the reservoir with the liftgate in the stored position. Fill with Dexron III automatic transmission fluid.
b. Check that the cylinders and pump are plumbed together according to the drawings in the liftgates owners manual. The C1 port on the pump (C1 is stamped in the aluminum pump base by this port) is the high pressure port and should connect to the rod end of the cylinders. The other port on the cylinders are the low pressure lowering ports and should be plumbed to the C2 port on the pump (C2 is stamped in the aluminum pump base by this port).
c. The power unit on the ST40 is equipped with a lifting relief valve to prevent overloading of the liftgate. See relief setting in “Maintenance Guide” section of this manual.
d. With the “RAISE” switch engaged check for voltage on the green wire at the switch. If no voltage is present replace the switch. If voltage is present, with the “RAISE” switch engaged, check for voltage at the green wire on the raise solenoid valve coil terminal at the pump. If no voltage is present, the green wire from the “RAISE” switch is loose or broken and needs repaired. If there is voltage (minimum of 9.5 volts) and the valve is not opening to allow the gate to raise, either the raise coil is bad or the entire raise coil/valve assembly is bad. To check to see if the coil is defective, remove the green wire from the spade terminal on the raise coil and check for continuity between the spade terminal and the nut which holds the coil on the valve stem. If continuity does not exist, replace the defective coil, otherwise replace the defective raise coil/valve assembly.
e. See section “c” above for relief valve setting. Plumb a pressure gauge into the high pressure circuit of the liftgate (those hoses connected to the C1 port on the pump). Remove all loads from the liftgate’s platform. Engage the “RAISE” switch until the liftgate is fully raised. Keep the “RAISE” switch engaged until the pump bypasses through the relief valve and note the pressure on the gauge at this time. If the rated relief pressure is not present during relief, adjust the high pressure relief valve setting as necessary. There are two relief valves on this pump so make sure to adjust only the high pressure relief setting at this time. The high pressure relief is the higher one on the aluminum pump base. If the relief pressure is not attainable the relief valve must be cleaned and/or replaced or the pump is defective. See part i below.

f. If the liftgate will not raise with a load on the platform but empty is raising slowly or only partially, one or both of the cylinders may be bypassing. To check for bypassing cylinders do the following. Lower the gate to the ground to relieve all pressure from the cylinders. Disconnect both cylinders from the liftarm. Press the “RAISE” switch until both cylinders are fully retracted. Disconnect the low pressure hoses from the power unit at the swivel fitting at the C2 port at the pump. Plug the newly opened end(s) of the swivel fitting. Put the loose ends of the disconnected hoses in a container to catch any oil, which comes out during this test. Press the “RAISE” switch for 15 to 20 seconds and watch for a steady stream of fluid coming out of one of the disconnected hose ends into the container. If no steady stream of oil is present reconnect all hoses and press the “LOWER” switch until both cylinders are fully extended. Disconnect the high pressure hoses from the power unit at the swivel fitting at the C1 port at the pump. Plug the newly opened end(s) of the swivel fitting. Put the loose ends of the disconnected hoses in a container to catch any oil, which comes out during this test. Press the “LOWER” switch for 15 to 20 seconds and watch for a steady stream of fluid coming out of one of the disconnected hose ends into the container. Replace or rebuild any cylinder with fluid com ing out of its disconnected hose end, as this indicates fluid is bypassing the piston seals on the cylinder. Reconnect rebuilt or replaced cylinders and hoses as before.
g. Broken or punctured hydraulic lines and fittings must be replaced with care to avoid injury from high pressure oil streams.
h. With the liftgate at the ground, disconnect the power unit and remove the reservoir. Check to see if the suction tube is clogged or has fallen out of the pump base. Clean the screen or reattach the suction tube as required.
i. If all else fails replace the power unit, it is probably worn out.

3. Problem – Liftgate will not lower with the pump motor running

Causes - a. Defective lowering solenoid coil or valve
b. Clogged or defective hydraulic lines, fittings or flow controls

Corrections - a. With the “LOWER” switch engaged check for voltage on the red wire at the switch. If no voltage is present replace the switch. If voltage is present, with the “LOWER” switch engaged, check for voltage at the red wire on the lower solenoid valve coil terminal. If no voltage is present, the red wire from the “LOWER” switch is loose or broken and needs replaced. If there is voltage (minimum of 9.5 volts) and the valve is not opening to allow the gate to lower, either the lower coil is bad or the entire lower coil/valve assembly is bad. To check to see if the coil is defective, remove the red wire from the spade terminal on the lower coil and check for continuity between the spade terminal and the nut, which holds the coil on the valve stem. If continuity does not exist, replace the defective coil, otherwise replace the defective lower coil/valve assembly.
b. Remove any obstruction in the hoses, fittings or flow controls or replace any hose, fitting or flow control, which does not allow fluid to flow through freely.

4. Problem – Liftgate raises slowly – The raise speed of the ST40 on a 56” bed height while empty at 70° F is approximately 10-15 seconds. The raise speed loaded for the same conditions is approximately 20-25 seconds.

Causes - a. Overload condition
b. Cold weather
c. Partially blocked suction screen
d. Lift cylinders are bypassing

e. Improperly adjusted or defective raise relief valve
f. Low voltage and/or bad ground
g. Worn out pump

Corrections – a. See section 2a
b. Refer to Owner's Manual for alternative oils to use for cold weather conditions.
c. Remove reservoir and clean or replace suction screen as necessary.
d. See section 2f
e. See section 2e
f. The minimum voltage between the motor stud and ground is 9.5 volts at maximum load conditions. See section 1b and 1c.
g. After all other corrections are performed it will be necessary to replace the pump.

5. Problem – Foamy oil flowing from reservoir breather

Causes - a. Air is present in the system
b. Flow control is on backwards
c. Inoperable flow control

Corrections - a. This can occur if the motor is not running as the liftgate is lowered. See problem 1, part e and f. Also air can enter the system if the fluid level is low, see problem 2, part a, or if the suction tube is disconnected, see problem 2, part h. Also air may enter through fittings, which are not tightened properly, so check for any leaks around fittings or hoses. Once the source of the air is determined, the cylinders must be bled of all air. Most air can be removed from the system by lowering the gate to the ground to relieve all pressure from the cylinders, unpinning the cylinders and cycling them back and forth several times from fully extended to fully retracted and allowing the pump to bypass through the relief valves for a few seconds in each direction.
b. The flow control provided is rated at 1.25 GPM. The arrow on the flow control must point away from the cylinder, designating the direction of the controlled flow. Correct as needed.
c. Remove and disassemble the flow control and check for excessive wear and contamination. Clean as needed and reassemble. If this does not correct the problem replace the flow control.

If you have any questions or problems that are not covered in this guide please call Thieman's Engineering Department at 1-800-524-5210.