查询ADM200供应商

Related Products: Motor Operated Auto Drain

Series ADM200

Reliably discharges even highly viscous drainage

Highly resistant to dust and highly viscous drainage, the valve opens and closes reliably to discharge the drainage.

Large drain discharge capacity

With a large discharge port, a large amount of drainage can be discharged in a single operation.

Elimination of residual drainage from inside of the tank and pipes prevents the generation of foreign matter as a result of dried rust or drainage, which could adversely affect the equipment located on the outlet side.

Low power consumption: 4 W

A long pipe can also be connected to the discharge port.

It can be connected directly to a compressor.



How to Order

ADM200- □ □ □

Port size

Symbol	IN	OUT
03	3/8	3/8
04	1/2	3/8

Voltage

1	100 VAC 50/60 Hz
2	200 VAC 50/60 Hz
3	240 VAC 50/60 Hz
4	110 VAC 50/60 Hz
5	220 VAC 50/60 Hz
6	24 VDC
7	12 VDC

Operating time/ Applicable compressor

Nil	2 sec/min (1 cycle/min) /3.7 to 37 kW
4	4 sec/min (2 cycle/min) /37 to 75 kW
6	6 sec/min (3 cycle/min) /75 to 110 kW
8	8 sec/min (4 cycle/min) /220 to 370 kW

Model/Specifications

Model	ADM200-□□-□
Fluid	Air
Max. operating pressure	1.0 MPa
Proof pressure	1.5 MPa
Ambient and fluid temperature	–5 to 60°C (No freezing)
Operating cycle*	1 cycle in a minute (Standard)
Operating time	2 sec./cycle (Standard)
Power source	100, 200 VAC 50/60 Hz, Other
Power consumption	4 W
Port size	IN: Rc 3/8, 1/2
	OUT: Rc 3/8
Weight	550 g

* If the operating cycle is twice in a minute (op. time 2 sec. x 2) operating time is 4 sec. each minute.

⚠ Precautions

Be sure to read before handling. Refer to pages 14-21-3 to 4 for Safety Instructions and Common Precautions on the products mentioned in this catalog, and refer to pages 14-14-6 to 8 for Precautions on every series.

Mounting

⚠ Warning

1. Install this product after discharging the drainage that has already accumulated in the tank. Failure to observe this precaution could lead to malfunctions.
2. Install this product, so that its drain port faces down. Failure to observe this precaution could lead to malfunctions.

⚠ Caution

1. Provide a stop valve before ADM200 to facilitate maintenance and inspection.

Maintenance

⚠ Caution

1. If the valve becomes clogged with debris, press the manual button to flush out the debris. Failure to observe this precaution could lead to malfunctions.

Mounting Example

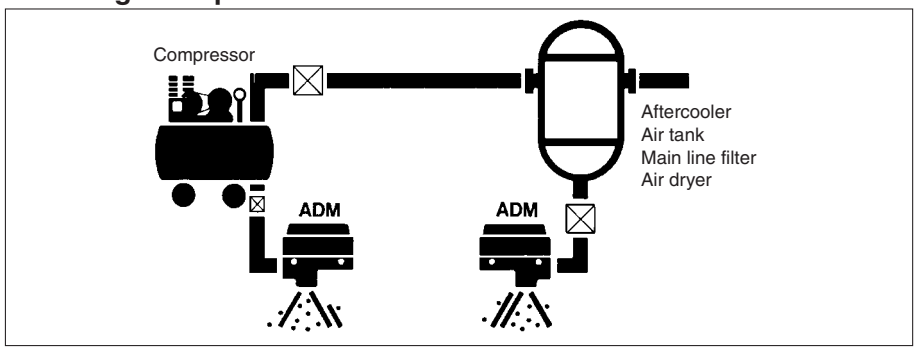

Construction/Dimensions

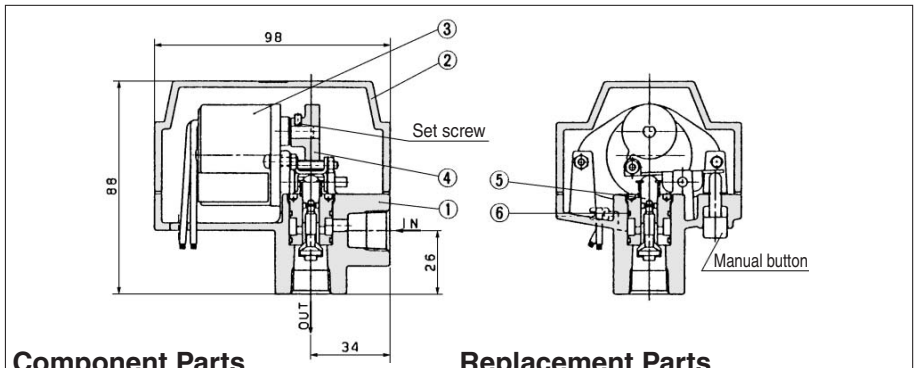

Component Parts

No.	Description	Material	Note
①	Body	ADC12	Chrome treated
②	Cap	ADC12	Chrome treated

Replacement Parts

No.	Description	Material	Part no.
③ Note	Motor	—	812PG-voltage
④	Cam	SCS13	Operating time 201324 (Nil) 201325 (4) 201326 (6) 201327 (8)
⑤	Valve assembly	C3604B	20137-1A
⑥	O-ring	NBR	S-16

Note) Motor port no. in the case of 100 VAC: 812PG-100VAC

Courtesy of Steven Engineering, Inc.-230 Ryan Way, South San Francisco, CA 94080-6370-Main Office: (650) 588-9200-Outside Local Area: (800) 258-9200-www.stevenengineering.com