# TMC with manual soldering termination

## Dimensional drawings

Male connector

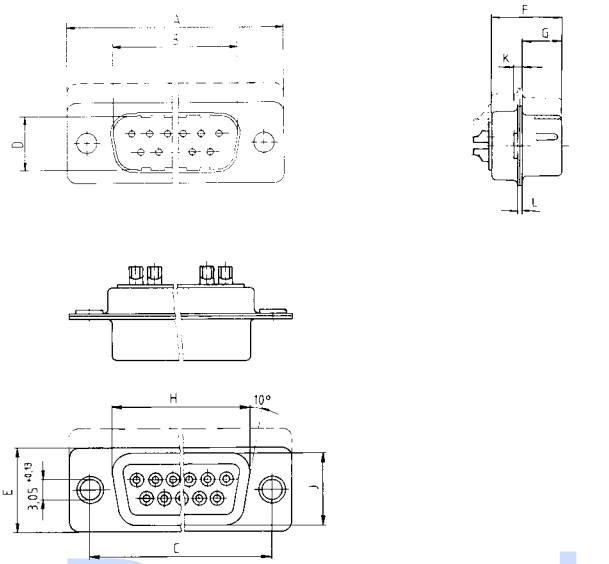

Female connector

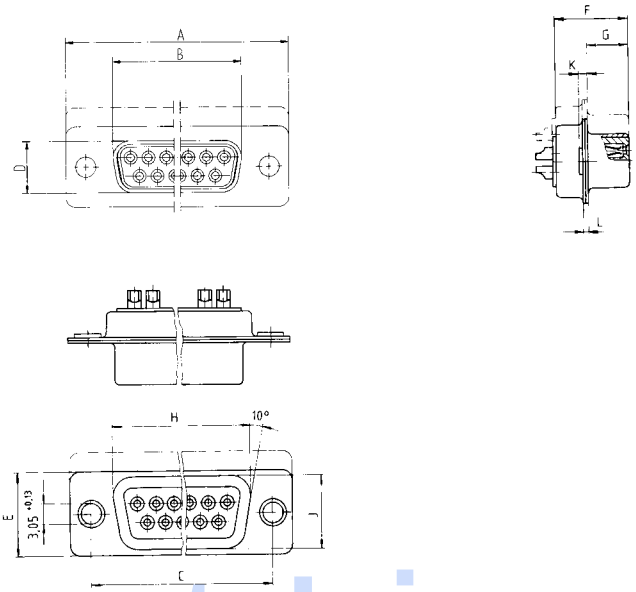

Datasheet.Live

## Ordering details

| | | Female connectors |
|---|---|---|
| | | TMC–S–....L (solder cup tinned)<br>*Performance Level 207* |
| Number of pins | | 09 15 25 37 50 |
| ***Standard*** | | *Standard version*<br>**004617 004620 004613 004926 004615** |

| | TMC–P–....L (solder cup gold–plated)<br>*Performance Level 207* | TMC–S–....L (solder cup gold–plated)<br>*Performance Level 207* |
|---|---|---|
| Number of pins | 09 15 25 37 50 | 09 15 25 37 50 |
| ***Standard*** | *Standard version*<br>**023127 023128 023129 023130 023131*** | *Standard version*<br>**004125 013522 013635 004633 013844** |

# Assembly details

**TMC with manual solder termination**

Assembly cutout

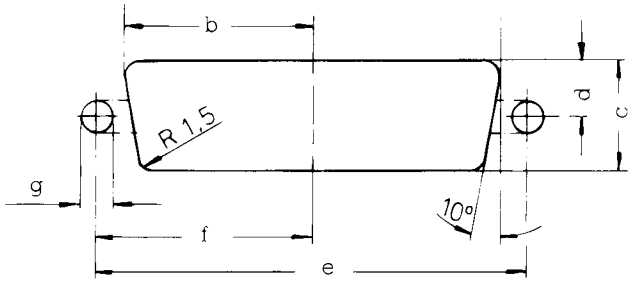


Front assembly

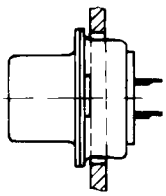

Rear assembly

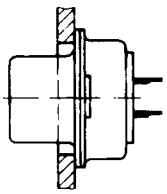

Zone of reliable contact

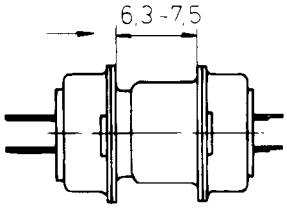


| Number of pins | Assembly | a ±0,13 | b ±0,13 | c ±0,13 | d ±0,13 | e ±0,1 | f ±0,1 | g ±0,1 |
|---|---|---|---|---|---|---|---|---|
| 9 | Front | 22,2 | 11,1 | 13,0 | 6,5 | 25 | 12,5 | 3,1 |
| | Rear | 20,5 | 10,25 | 11,4 | 5,7 | | | |
| 15 | Front | 30,5 | 15,25 | 13,0 | 6,5 | 33,3 | 16,65 | 3,1 |
| | Rear | 28,8 | 14,4 | 11,4 | 5,7 | | | |
| 25 | Front | 44,3 | 22,15 | 13,0 | 6,5 | 47 | 23,5 | 3,1 |
| | Rear | 42,5 | 21,25 | 11,4 | 5,7 | | | |
| 37 | Front | 60,7 | 30,35 | 13,0 | 6,5 | 63,5 | 31,75 | 3,1 |
| | Rear | 59,1 | 29,55 | 11,4 | 5,7 | | | |
| 50 | Front | 58,3 | 29,15 | 15,8 | 7,9 | 61,1 | 30,55 | 3,1 |
| | Rear | 56,3 | 28,15 | 14,1 | 7,05 | | | |