AU5800® Chemistry Analyzer

Laboratory Automation Connecting Kit

PN B08501AB
August 2012

Beckman Coulter, Inc.
250 S. Kraemer Blvd.
Brea, CA 92821 U.S.A.

BECKMAN COULTER

AU5800 Chemistry Analyzer
Laboratory Automation Connecting Kit
PN B08501AB (August 2012)

Copyright © 2012 Beckman Coulter, Inc.
All rights reserved.

Find us on the World Wide Web at:
www.beckmancoulter.com

EC REP
Beckman Coulter Ireland Inc.
Lismeehan
O'Callaghans Mills
Co. Clare
Ireland

Beckman Coulter do Brasil Com e Imp de Prod de Lab Ltda
Estr dos Romeiros, 220 - Galpao G3 - Km 38.5
06501-001 - Sao Paulo - SP - Brasil
CNPJ: 42.160.812/0001-44

製造販売業者：ベックマン･コールター株式会社
東京都江東区有明三丁目 5 番 7 号
TOC 有明ウエストタワー

Beckman Coulter KK
贝克曼库尔特株式会社
东京都江东区有明三丁目 5 番 7 号
邮编：135-0063

Revision History

This document was created as an addendum to the AU5800 User's Guide to describe the differences from the standard operation of the AU5800 when it is connected with the Beckman laboratory automation system. Refer to the AU5800 User's Guide for standard operating procedures, and all AU5800 information not specifically addressed in this addendum.

Initial Issue, B08501AA 01/12
Software version 4.0

Issue B, B08501AB 08/12
Software version 4.11

Contents

Revision History, iii

CHAPTER 1: Introduction, 1-1

CHAPTER 3: System Outline, 3-1

3.4 Understanding the System Hardware, 3-2
3.4.3 LEDs and Operation Buttons (Rack Feeder Unit), 3-3
LED, 3-3
Operation Buttons, 3-5
3.4.6 Rack Feeder Unit, 3-6
Rack Feeder Unit Functions, 3-7

CHAPTER 5: Daily Start Up, 5-1

5.1 Start the System, 5-2
5.1.2 Set the Start Conditions , 5-2
Set the default start sample numbers, 5-5

5.8 Start Analysis , 5-6

CHAPTER 6: Sample Programming and Processing, 6-1

6.2 Prepare Racks for Analysis, 6-2
6.2.3 Place a Set Tray and Collection Tray on the Analyzer, 6-2
6.2.4 Add Racks Directly to the System, 6-3

CHAPTER 7: System Monitoring and Results, 7-1

7.2 Monitoring Analysis, 7-2
7.2.4 Analyzer Status Menu, 7-2
Top View of Rack Feeder Unit, 7-3

CHAPTER 1

Introduction

The Laboratory Automation Connecting Kit (LA kit) is an optional unit used to connect the AU5800 with the Beckman laboratory automation system automation line.

This addendum to the AU5800 User's Guide describes the difference from the standard operation of the AU5800 when it is connected with the Beckman laboratory automation system. Refer to the *AU5800 User's Guide* for standard operating procedures, and all AU5800 information not specifically addressed in this addendum.

The chapter numbering is not sequential, and reflects the corresponding chapters in the AU5800 User's Guide.

The following conditions exist when the AU5800 is connected to the Beckman laboratory automation system with PrepLink or its equivalent. These conditions do not exist on a stand-alone AU5800, or when the AU5800 is connected to the Beckman laboratory automation system without PrepLink or its equivalent.

- A test is not performed on an analyzer unit if the reagent on the analyzer unit is in one of following conditions:
  - Reagent is expired very soon.
  - Reagent is expired.
  - Onboard stability is expired very soon.
  - Onboard stability is expired.
  - No calibration result.
  - Calibration failed.
  - No reference calibration result.
  - Calibration stability is expired very soon.
  - Calibration stability is expired.
  - No reagent blank result.
  - Reagent blank failed.
  - Reagent blank stability is expired very soon.
  - Reagent blank stability is expired.
  - Dilution short (for a test programmed for pre-dilution).

- No reagent probe wash solution (for a test programmed for contamination prevention).

- When "Can NOT be run Test during RB/CAL" is programmed to "Enable" in System Maintenance, a test is not performed on the unit in the following conditions:
  - During reagent blank analysis. The test is not performed until the reagent blank is successful.
  - During calibration analysis. The test is not performed until the calibration is successful.
- Analysis is not performed on a unit in the following conditions:
  - The sample probe wash solution is short or empty.
  - Incubation temperature is out of range.

CHAPTER 3

System Outline

This chapter describes the differences in key sub-processes and hardware components of the AU5800 when it is connected with the Beckman laboratory automation system.

3.4 Understanding the System Hardware

3.4.3 LEDs and Operation Buttons (Rack Feeder Unit)

3.4.6 Rack Feeder Unit

3.4 Understanding the System Hardware

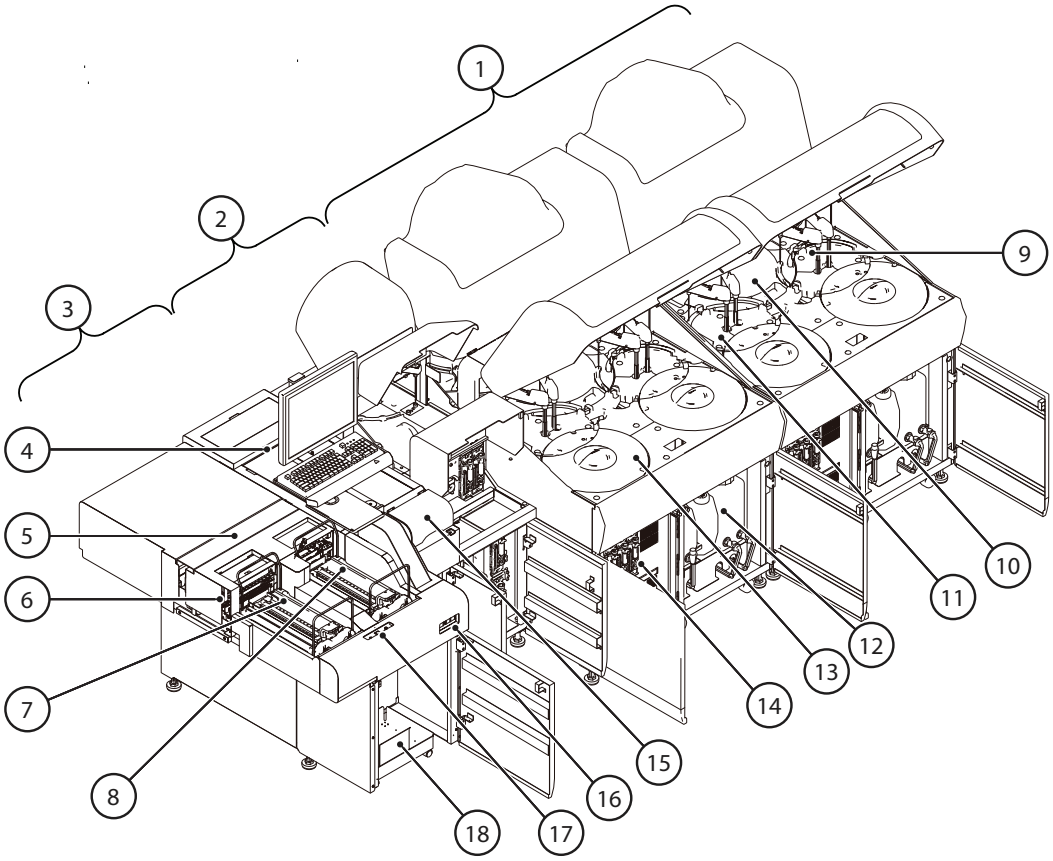

1. Analyzer units
2. ISE unit
3. Rack feeder unit
4. Rack buffer unit
5. Rack un-loader unit
6. Rack loader unit
7. Rack set unit
8. Rack collection unit
9. Reagent transfer unit
10. Incubation bath unit
11. Photometry unit
12. Tank unit
13. Refrigerator unit
14. Syringe unit
15. Priority rack set unit
16. ON button
17. Operation buttons
18. Tank unit

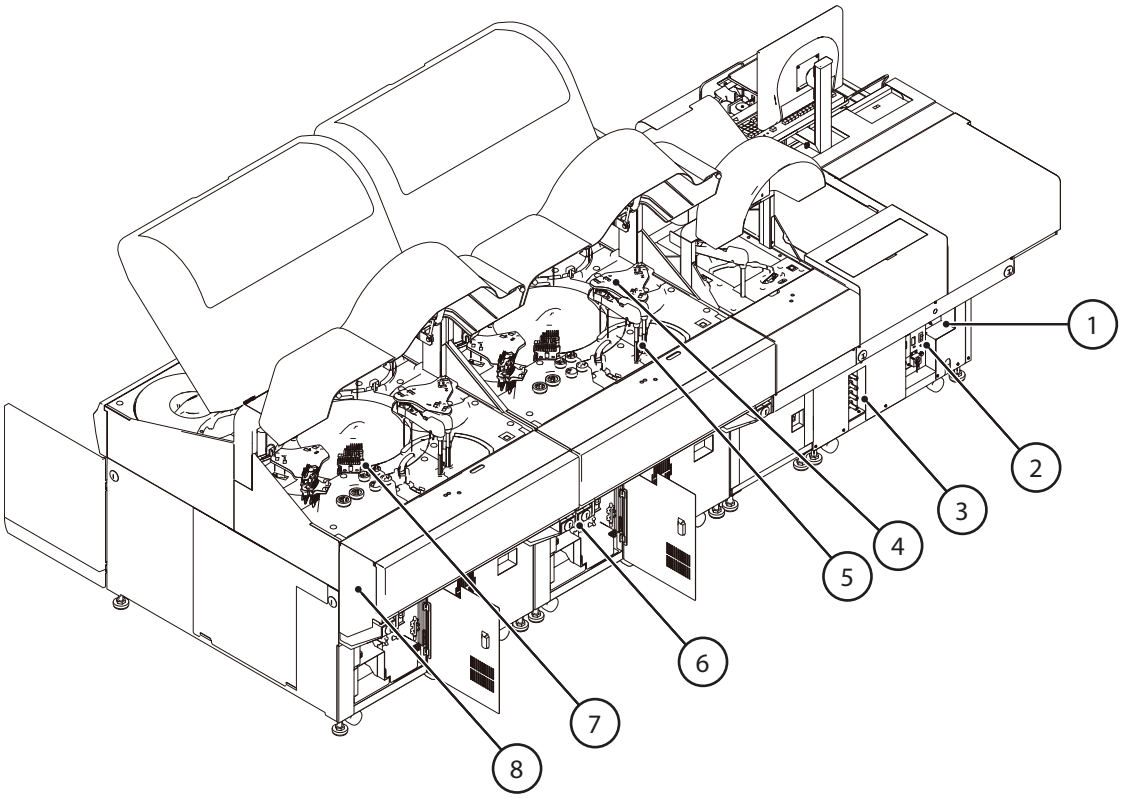

1. Breakers and fuses
2. Power supply unit
3. Water supply/drain unit
4. Mixing unit
5. Sample transfer unit
6. Syringe unit
7. Wash nozzle unit
8. Transfer unit

3.4.3 LEDs and Operation Buttons (Rack Feeder Unit)

The rack feeder unit and priority rack set unit each have LEDs to show the status of each area.

LED

Rack set unit:

Amber LED flashing	Racks are in the process of loading onto the system. Wait until the amber LED turns off before loading or unloading a rack tray.

Priority rack set unit:

Amber LED flashing	Racks are in the process of loading onto the system. Wait until the amber light turns off to load additional priority racks.

Rack collection unit:

Amber LED flashing	Rack collection area is full.

Figure 3.1

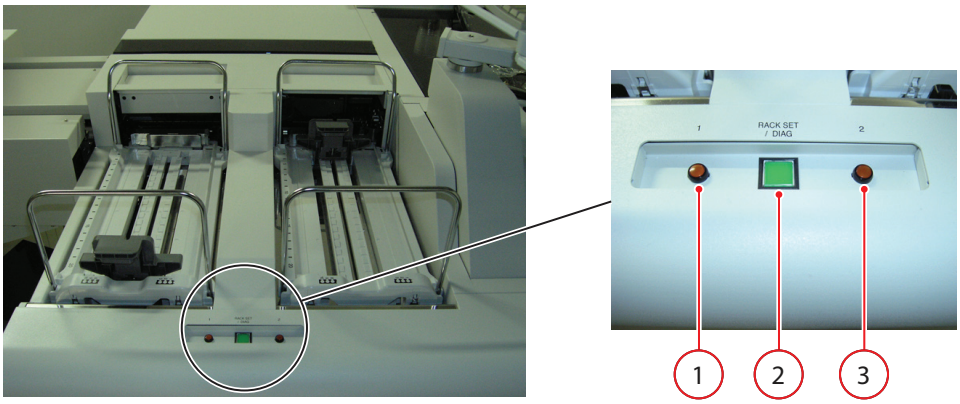

1. Rack set unit amber LED
2. RACK SET/DIAG button
3. Rack collection unit amber LED

Figure 3.2

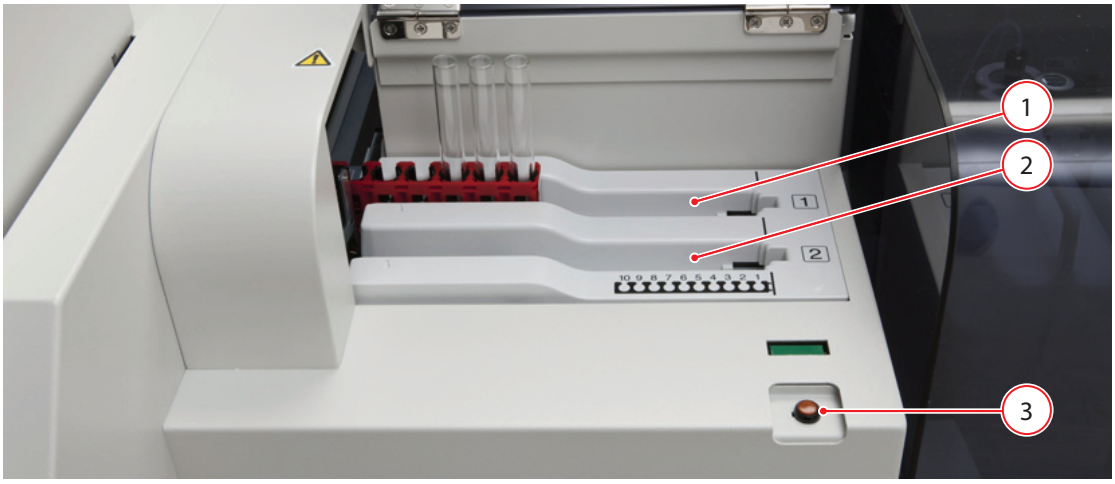

1. Rack set position 1
2. Rack set position 2
3. Priority rack set unit LED

Operation Buttons

- RACK SET/DIAG button

  Use this button to load a rack(s) or tray when racks are moving on the rack set unit. The green RACK SET/DIAG button LED is On and the amber LED flashes when racks are moving on the rack set unit. Press the RACK SET/DIAG button to stop moving racks. The RACK SET/DIAG button flashes, and the amber LED stops flashing, and racks or a tray can be loaded. Press the RACK SET/DIAG button again to resume rack movement on the rack set unit. The RACK SET/DIAG button LED is off when there are no racks on the rack set unit. The RACK SET/DIAG button is used to initiate maintenance functions in Maintenance modes.

  Figure 3.3

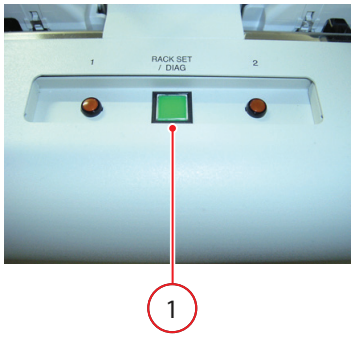

  1. RACK SET/DIAG button

- DIAG button

  This button can be used to activate diagnostic or maintenance functions.

  Figure 3.4

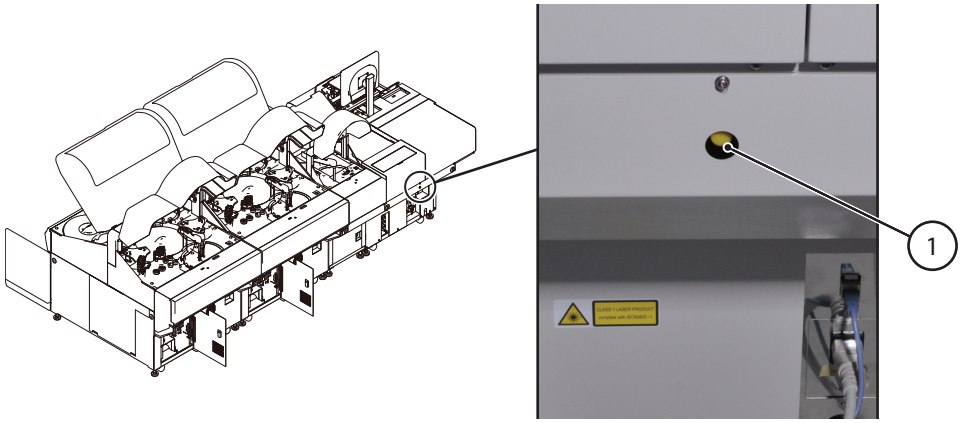

  1. DIAG button

3.4.6 Rack Feeder Unit

This unit is used for loading racks from the Beckman laboratory automation system to the AU5800, and unloading racks from the AU5800 to the Beckman laboratory automation system.

In addition, racks can be loaded on the rack set unit or priority rack set unit and unloaded to the rack collection unit. The rack set tray and collection tray each hold 20 racks, or 200 samples.

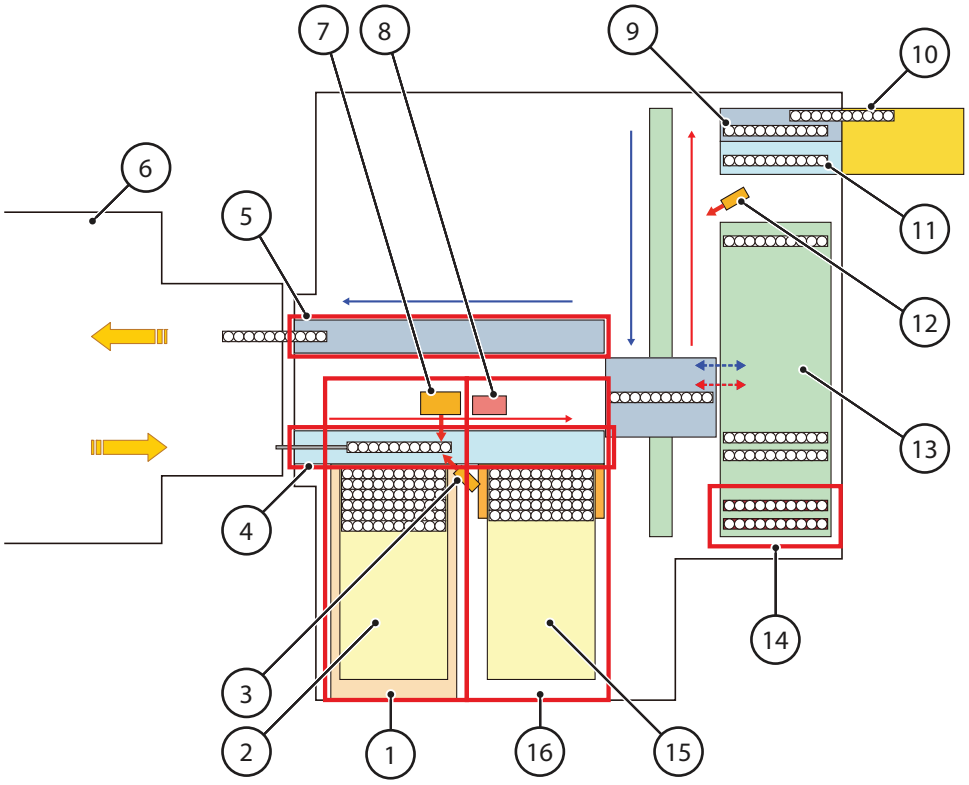

1. Rack set unit
2. Set tray
3. Rack ID barcode reader (LED BCR)
4. Rack loader unit from Beckman laboratory automation system
5. Rack un-loader unit to Beckman laboratory automation system
6. Beckman laboratory automation system
7. Sample ID barcode reader (Laser BCR)
8. Cup detector sensor
9. Primary sample transport lane
10. Return lane
11. Bypass lane
12. Collection rack ID barcode reader (LED BCR)
13. Rack buffer unit
14. Priority rack set unit
15. Collection tray
16. Rack collection unit

The following table summarizes the specifications for the sample ID barcode reader.

Table 3.1 Barcode Reader Specifications

Class	Wavelength	Maximum output	Bean divergence	Pulse width	Scan rate
3R	660 nm	4.9 mW	60°	89 µS	524 Hz

Table 3.2 Laser Specifications

Class	Wavelength	Maximum output	Bean divergence	Pulse width	Scan rate
3R	660 nm	4.9 mW	60°	89 µS	524 Hz

Rack Feeder Unit Functions

Sub-unit	Description
Rack loader unit	Loads racks from the Beckman laboratory automation system to the AU5800.
Rack un-loader unit	Returns racks to the Beckman laboratory automation system from the AU5800.
Rack Set unit	Loads racks directly on the AU5800. A maximum of 20 racks can be loaded on rack set tray. The rack set tray is placed on the rack set unit. Place reagent blank, calibration, and QC racks on the rack set unit.
Priority rack set unit	Loads racks on the system with a higher priority than the rack set unit. Two positions are available to load priority racks. The rack in position 1 is loaded first. When the priority rack set unit LED is flashing, additional racks cannot be loaded. Racks will not be processed from the priority set unit if there are three or more blue, yellow, or green racks on the rack set unit until the blue, yellow, and green racks move from the rack set tray. The system identifies three or more blue, yellow, or green racks on the rack set unit by the calibration and QC requisition.
Rack buffer unit	Twenty three positions to temporarily hold racks before processing on the rack transfer unit for the initial or repeat run.
Rack transfer unit	Three rack transportation belts consist of the primary sample transport lane, the bypass lane, and the return lane.
Rack collection unit	Collects the racks supplied from the rack set unit and the priority rack set unit. 20 racks can be collected.

Rack Flow

1. To load racks directly on the AU5800, place racks on the priority rack set unit or the rack set unit, then select **Start**. Operation of the rack loader unit supplying racks from the Beckman laboratory automation system is temporarily suspended. Racks placed on the priority rack set unit or the rack set unit are supplied in a higher priority than racks loading from the rack loader unit (Beckman laboratory automation system).
2. After identification of the rack type, rack ID, the sample cup, the sample cup type, and the sample ID, the racks are moved to the rack buffer unit.
3. The racks from the Beckman laboratory automation system are returned to the Beckman laboratory automation system after the analysis is completed. Racks from the priority rack set unit and the rack set unit are returned to the rack collection unit.

TIP If a rack ID read error occurs on a routine (white) rack, analysis continues. The system assigns the first rack ID read error as rack ID “?001” and continues assigning rack ID read errors sequentially to “?999.”

If a rack ID read error occurs on a reagent blank (blue), calibration (yellow), or QC (green) rack, the rack stops, and the system goes to *Measure 2*.

If a colored rack other than white is supplied from the Beckman laboratory automation system, the rack stops, and the system goes to *Measure 2*.

CHAPTER 5

Daily Start Up

This chapter describes the differences in the daily start up procedures when the AU5800 is connected to the Beckman laboratory automation system.

5.1 Start the System

5.1.2 Set the Start Conditions

5.8 Start Analysis

5.1 Start the System

5.1.2 Set the Start Conditions

Use this menu to create a data index, select a Group of tests, and input the operator name.

An index is a data file identified by the date and time. Create a new index daily, each shift, or as needed. A maximum of 100,000 samples or 300 indexes can be saved on the hard drive. A maximum of 9999 samples can be processed in an index.

TIP If the system is just turned on, the Index and Group can be set from the New Index window. Refer to 5.1.1 Turn On the System in the *AU5800 User's Guide*.

---

1 Select **Home** > **Start Condition**.

Figure 5.1

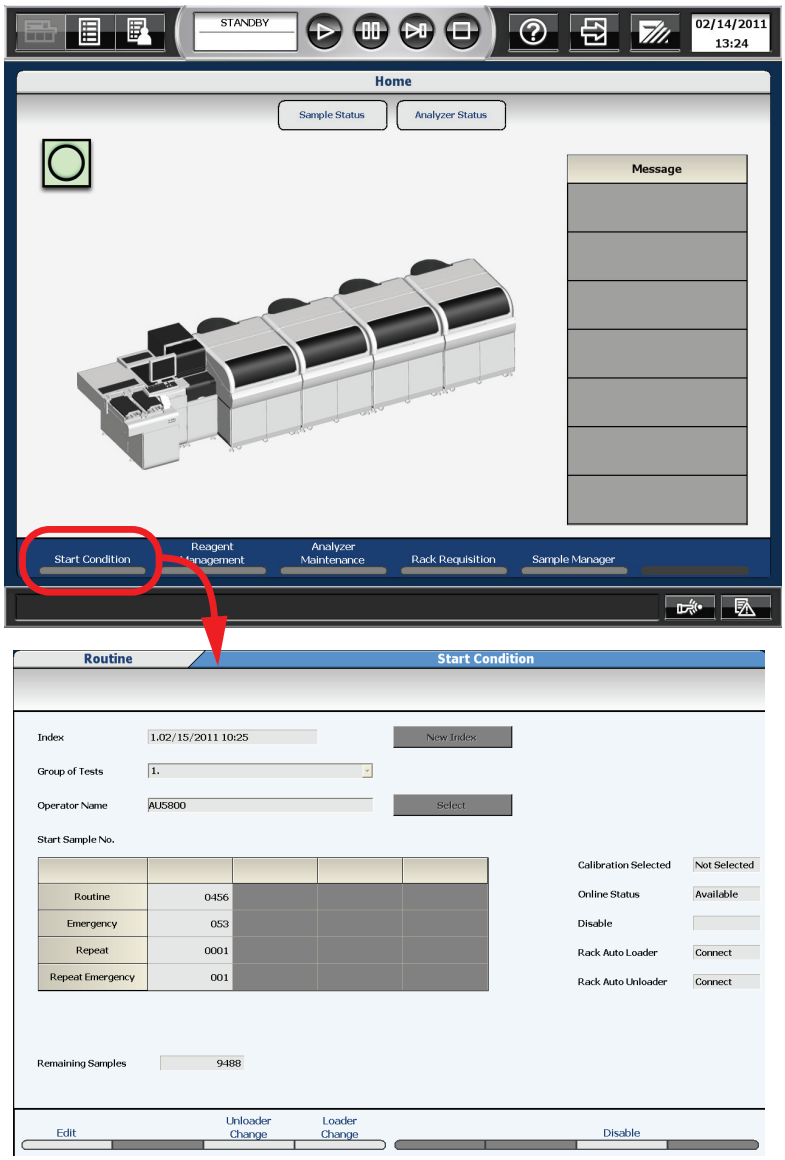

TIP Index

Displays the current index. Changes when **New Index** or **Date Index (F8)** is selected.

Group of test

Selects the group of on-board tests to perform.

Operator Name

Enter the operator name, or select the **Select** button to select a name from the comment master list.

Start Sample No.

Displays the next sample number to be processed on the analyzer. When a new index is created, the Start Sample Numbers go to the default sample numbers, typically 0001.

Unloader Change (F3)

When Unconnect is selected, the racks are not transported to the Beckman laboratory automation system from the AU5800. After analysis, racks move to the rack collection unit. This setting becomes

active at the start of analysis.

Loader Change (F4)

When Unconnect is selected, racks are not transported from the Beckman laboratory automation system to the AU5800. The setting becomes active at the start of analysis.

Disable (F7)

An option to stop analysis (disable) on a test even when the test has a requisition. Refer to 7.3 Disable a Test in the *AU5800 User's Guide*.

Default Start Sample No. (F7) (Select **Edit (F1)** to display)

Program the default start sample numbers to be assigned to Start Sample Number when a new index is created. If 2 or more analyzers are in the lab, it may be convenient to have one analyzer start at 0001, and another analyzer start at 1001, for example. The purpose of this is to easily identify data from a specific analyzer.

Data Index (F8)

This option creates an index by entering (manual) the date and time.

2 Select **Edit (F1)**.

3 Select **New Index** or **Date Index (F8)**. If **Date Index (F8)** is selected, the Date Index window opens.

a. Select the date and time from the "Index" drop-down list.

b. Select **OK**.

Figure 5.2

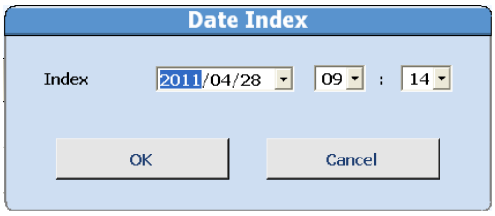

4 Select a group of tests to process from the “Group of Tests” drop-down list.

5 Enter the operator name in Operator Name (optional).

6 Verify Start Sample No. is 0001, or the default start number.

7 Select **Confirm (F1)**. The Start Condition window displays "Create a New Index?".

8 Select **OK**. The programming is registered.

Set the default start sample numbers

1 Select **Edit (F1) > Default Start Sample No. (F7).** The Default Start Sample No. window opens.

Figure 5.3

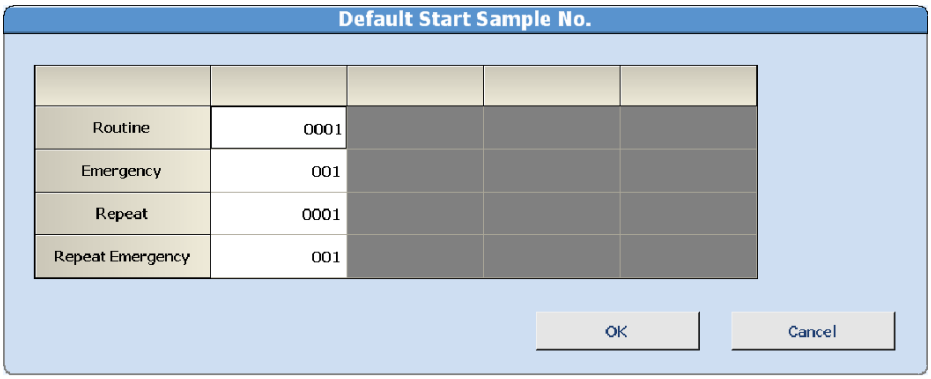

2 Enter the default start sample numbers.

3 Select **OK.**

5.8 Start Analysis

The reaction time is approximately 8 minutes and 40 seconds for the first result to be obtained after the sample is dispensed. Every 3.6 seconds, two tests can be sampled. Each analyzer unit has a maximum throughput of 2,000 tests per hour.

Results can be viewed on the monitor and printed.

To start analysis:

1 Select **Start** to display the Start window with an Error List if any errors are present.

Figure 5.4

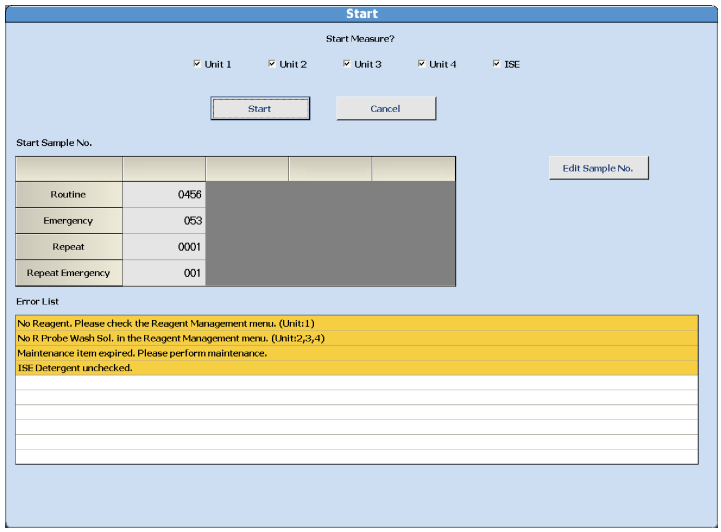

Review errors carefully and perform necessary corrective actions before starting analysis. If an error is in red, it is necessary to perform corrective actions before that unit(s) can be started.

2 Verify all units have a check in the box indicating the unit will be started. If the box is gray and inaccessible, review the error list and perform necessary corrective actions before starting. Remove the check from the box if analysis is not required on a unit, and the unit will not start.

3 Select **Start**. The system initializes, and analysis starts if no errors are detected. The mode changes from *Standby* to *Measure 1*.

TIP

- When the AU5800 is connected to the Beckman laboratory automation system, *Measure 1* mode continues even when no more racks are supplied from the rack loader unit. To stop the analysis, select **Feeder Stop**. The analyzer moves to *Measure 2*, then *Standby*.
- When racks are placed on the priority rack set unit or the rack set unit, and **Start** is selected, the system temporarily suspends the transport of racks from the rack loader unit (Beckman laboratory automation system). Racks are then loaded from the priority rack set unit as the first priority, then from the rack set unit as the second priority.

CHAPTER 6

Sample Programming and Processing

This chapter describes how to prepare racks for analysis when the AU5800 is connected to the Beckman laboratory automation system.

6.2 Prepare Racks for Analysis

6.2.3 Place a Set Tray and Collection Tray on the Analyzer

6.2.4 Add Racks Directly to the System

6.2 Prepare Racks for Analysis

This section describes how to load racks on the rack set unit and priority rack set unit when the AU5800 is connected to the Beckman laboratory automation system. It is necessary to load reagent blank (blue), calibration (yellow), and QC (green) racks on the rack set unit or priority rack set unit. Routine (white) and emergency (red) racks can be loaded on the rack set unit and priority rack set unit as needed.

6.2.3 Place a Set Tray and Collection Tray on the Analyzer

One tray can be placed on the rack set unit, and one tray can be placed on the rack collection unit.

To place trays:

1 Confirm that the rack set unit amber LED and rack collection unit amber LED are not blinking.

Figure 6.1

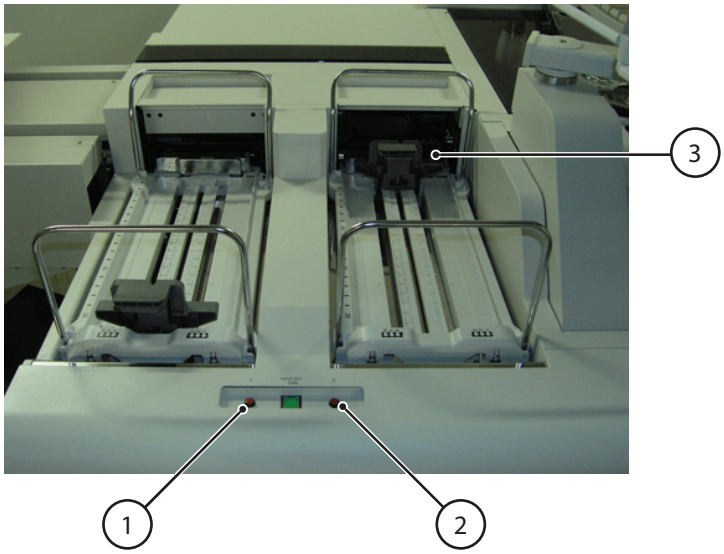

1. Rack set unit amber LED
2. Rack collection unit amber LED
3. Rack stabilizing bar

WARNING

Before removing a tray from the system during operation, confirm that the amber LED is off. If a tray is removed while the amber LED is blinking, an injury may result or the rack may topple over.

For a detailed description of the amber LEDs, refer to 3.4.3 LEDs and Operation Buttons (Rack Feeder Unit) in chapter 3.

2 Place the set tray with racks on the rack set unit, and an empty collection tray on the rack collection unit. Slide the rack stabilizing bar forward on the collection tray.

⚠ CAUTION

Verify the tray set indicators on the set tray and collection tray are in the correct position according to the photos below. Reset the set tray or collection tray if necessary.

Figure 6.2

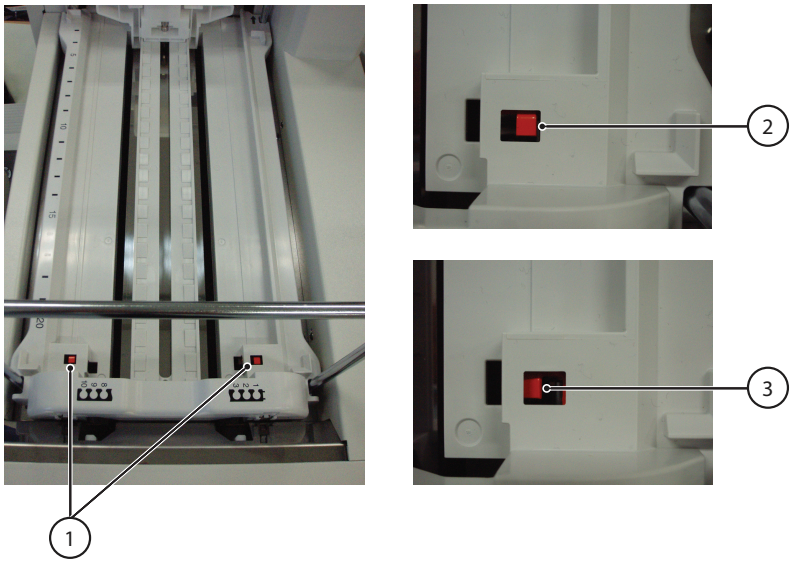

1. Tray set indicator.
2. Correct tray set indicator position: A flat orange square indicates the orange switch is completely up and the tray is flat on the rack set unit or rack collection unit.
3. Incorrect tray set indicator position: An orange square at an angle indicates the orange switch is not completely up, and the tray is not flat on the rack set unit or rack collection unit.

3 Select **Start**.

6.2.4 Add Racks Directly to the System

When adding racks directly to the system, use the following procedure. Verify that the racks are set in the correct direction.

WARNING

Never look directly into the sample ID barcode reader. The readers use lasers that can cause serious eye damage.

Figure 6.3

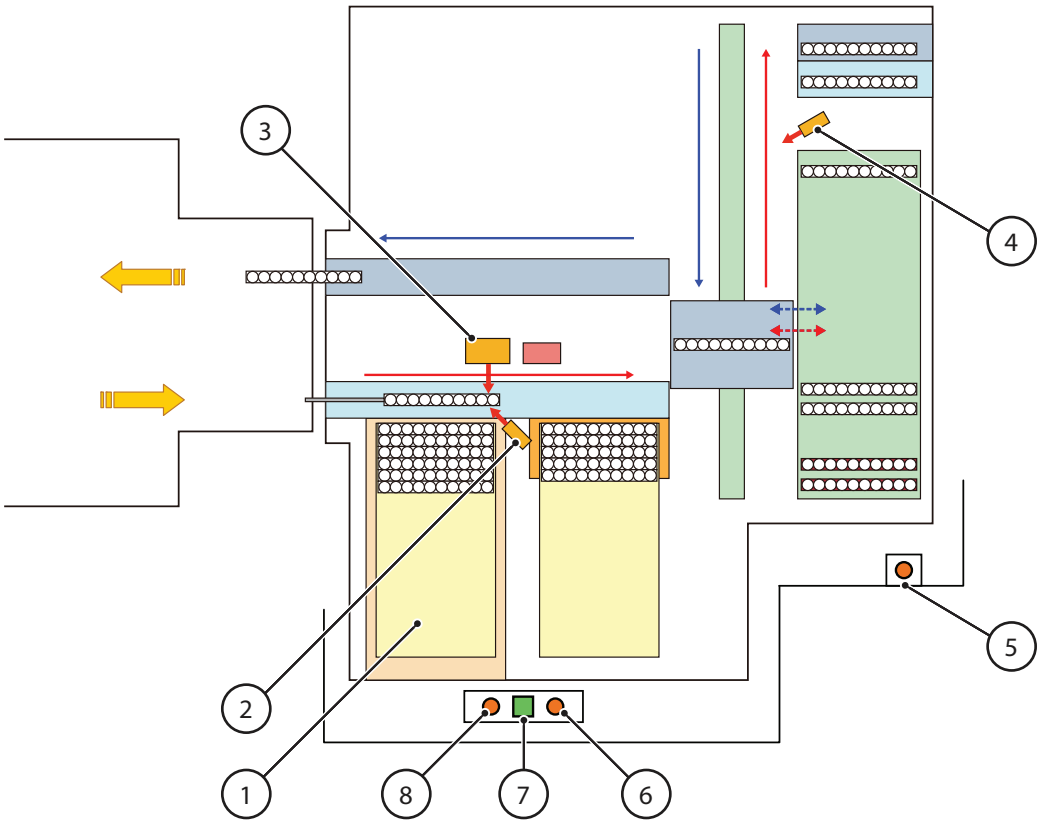

1. Set Tray
2. Rack ID barcode reader (LED BCR)
3. Sample ID barcode reader (Laser BCR)
4. Collection rack ID barcode reader (LED BCR)
5. Priority rack set unit LED
6. Rack collection unit amber LED
7. RACK SET/DIAG button
8. Rack set unit amber LED

1 If the rack set unit amber LED is blinking, press the RACK SET/DIAG button to stop moving existing racks. When the amber LED is off (the RACK SET/DIAG button is blinking), new racks can be loaded.

2 Set the additional rack(s) onto the set tray.

3 When the RACK SET/DIAG button is blinking, press the RACK SET/DIAG button. When the RACK SET/DIAG button is off, select **Start**. Racks begin moving into the system from the set tray.

CHAPTER 7

System Monitoring and Results

This chapter describes the differences in the **Analyzer Status** menu when the AU5800 is connected to the Beckman laboratory automation system.

7.2 Monitoring Analysis

7.2.4 Analyzer Status Menu

7.2 Monitoring Analysis

7.2.4 Analyzer Status Menu

Analyzer Status displays an overview of the analyzer status by color-coding the components.

1 Select **Home** > **Analyzer Status**.

Figure 7.1

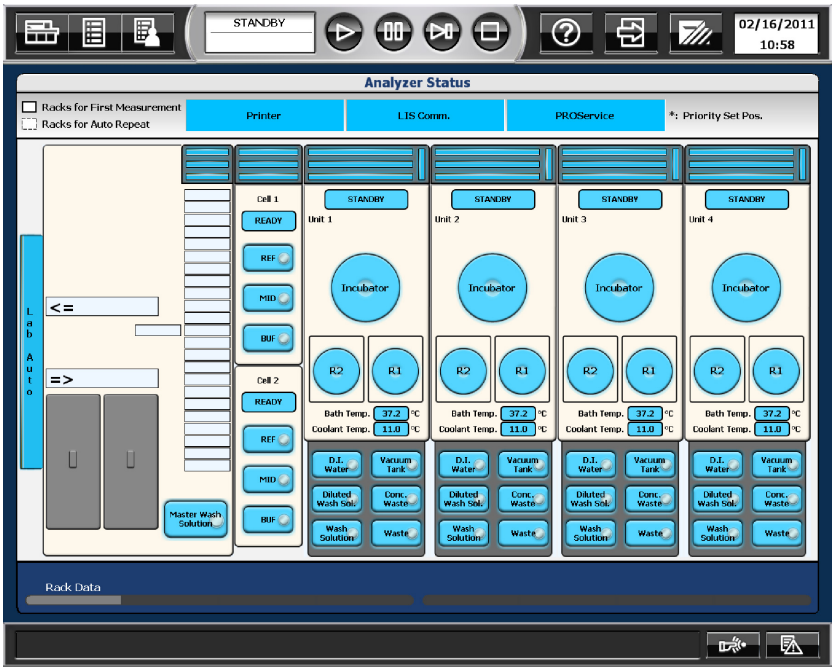

TIP The menu displays changes with the number of connected units. When there is no ISE option, the ISE option is not displayed.

2 Select **Rack Data (F1)** to view the time a rack was detected on the rack feeder unit (Pre-Analysis) and the time the rack moved to the rack collection area (Post-Analysis). The rack number, sample kind, type, rack entry location, and detailed sample information (number and ID) can also be viewed.

3 Perform the following verifications when the AU5800 is connected to the Beckman laboratory automation system. For other verifications from **Analyzer Status** not specific to connection with the Beckman laboratory automation system, refer to 7.2.2 Analyzer Status Menu in the *AU5800 User's Guide*.

Figure 7.2

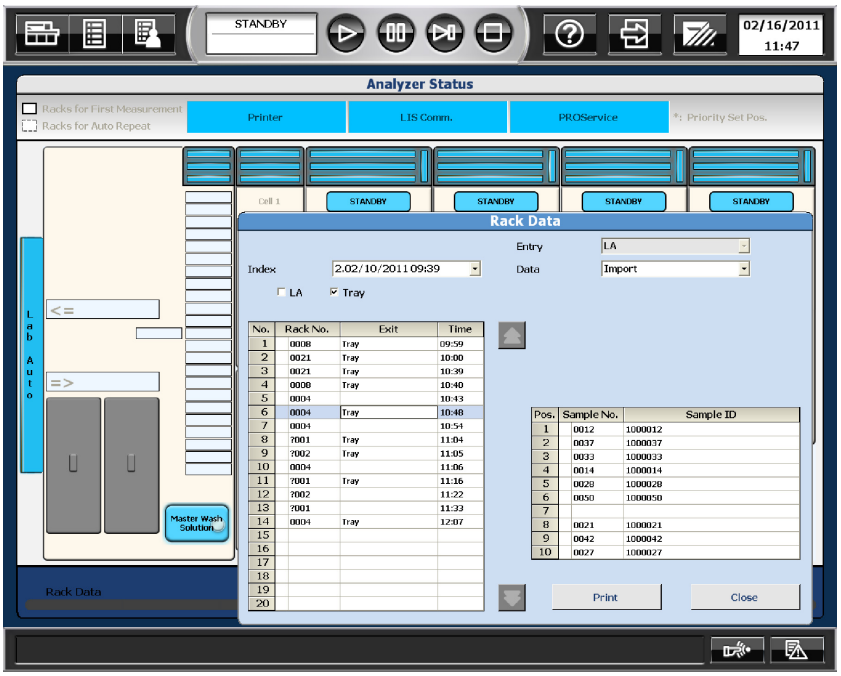

Top View of Rack Feeder Unit

Figure 7.3

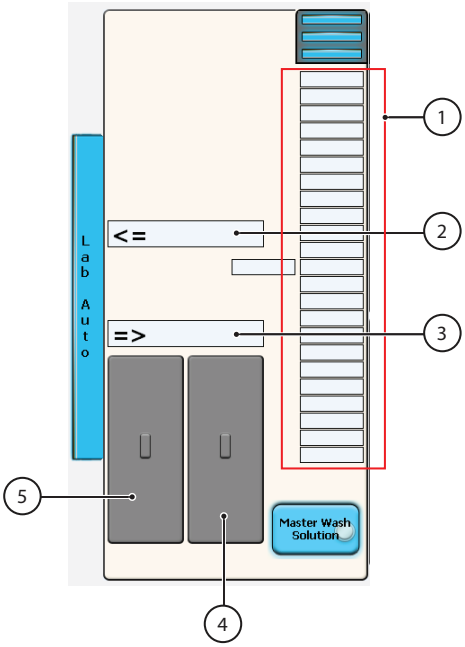

1. Rack Buffer Unit
2. Rack Un-loader Unit
3. Rack Loader Unit
4. Collection Tray
5. Set Tray

Select Lab Auto, Set Tray, or Collection Tray to display the rack information.

Rack Un-loader Unit: The display color indicates the status of the unit.

Display Color	Status
Gray	Normal
Red	Error

Rack Buffer Unit: The line type indicates the status of the rack buffer unit.

Line Type	Status
Normal line frame	A rack is not present, or the rack has been analyzed and is waiting to move to the rack collection tray.
Bold line frame	The rack is waiting to move to the rack transfer belts for the original run.

Master Wash Solution: The display color indicates the quantity of wash solution in the wash solution tank in the rack feeder unit.

Display Color	Status
Blue	Normal
Yellow	Insufficient