ONKYO

AV RECEIVER

TX-NR818

Instruction Manual

Made for iPod iPhone

Contents

Safety Information and Introduction 2

Table of Contents 6

Connections 13

Turning On & Basic Operations 23

Advanced Operations 51

Controlling Other Components 82

Appendix 91

Internet Radio Guide

Remote Control Codes

En

WARNING:
TO REDUCE THE RISK OF FIRE OR ELECTRIC SHOCK, DO NOT EXPOSE THIS APPARATUS TO RAIN OR MOISTURE.

CAUTION:
TO REDUCE THE RISK OF ELECTRIC SHOCK, DO NOT REMOVE COVER (OR BACK). NO USER-SERVICEABLE PARTS INSIDE. REFER SERVICING TO QUALIFIED SERVICE PERSONNEL.





The lightning flash with arrowhead symbol, within an equilateral triangle, is intended to alert the user to the presence of uninsulated “dangerous voltage” within the product’s enclosure that may be of sufficient magnitude to constitute a risk of electric shock to persons.



The exclamation point within an equilateral triangle is intended to alert the user to the presence of important operating and maintenance (servicing) instructions in the literature accompanying the appliance.

Important Safety Instructions

1. Read these instructions.
2. Keep these instructions.
3. Heed all warnings.
4. Follow all instructions.
5. Do not use this apparatus near water.
6. Clean only with dry cloth.
7. Do not block any ventilation openings. Install in accordance with the manufacturer’s instructions.
8. Do not install near any heat sources such as radiators, heat registers, stoves, or other apparatus (including amplifiers) that produce heat.
9. Do not defeat the safety purpose of the polarized or grounding-type plug. A polarized plug has two blades with one wider than the other. A grounding type plug has two blades and a third grounding prong. The wide blade or the third prong are provided for your safety. If the provided plug does not fit into your outlet, consult an electrician for replacement of the obsolete outlet.
10. Protect the power cord from being walked on or pinched particularly at plugs, convenience receptacles, and the point where they exit from the apparatus.
11. Only use attachments/accessories specified by the manufacturer.
12. Use only with the cart, stand, tripod, bracket, or table specified by the manufacturer, or sold with the apparatus. When a cart is used, use caution when moving the cart/apparatus combination to avoid injury from tip-over.

PORTABLE CART WARNING



S3125A

13. Unplug this apparatus during lightning storms or when unused for long periods of time.
14. Refer all servicing to qualified service personnel. Servicing is required when the apparatus has been damaged in any way, such as power-supply cord or plug is damaged, liquid has been spilled or objects have fallen into the apparatus, the apparatus has been exposed to rain or moisture, does not operate normally, or has been dropped.
15. Damage Requiring Service
    Unplug the apparatus from the wall outlet and refer servicing to qualified service personnel under the following conditions:
    - **A.** When the power-supply cord or plug is damaged,
    - **B.** If liquid has been spilled, or objects have fallen into the apparatus,
    - **C.** If the apparatus has been exposed to rain or water,
    - **D.** If the apparatus does not operate normally by following the operating instructions. Adjust only those controls that are covered by the operating instructions as an improper adjustment of other controls may result in damage and will often require extensive work by a qualified technician to restore the apparatus to its normal operation,
    - **E.** If the apparatus has been dropped or damaged in any way, and
    - **F.** When the apparatus exhibits a distinct change in performance this indicates a need for service.
16. Object and Liquid Entry
    Never push objects of any kind into the apparatus through openings as they may touch dangerous voltage points or short-out parts that could result in a fire or electric shock.
    The apparatus shall not be exposed to dripping or splashing and no objects filled with liquids, such as vases shall be placed on the apparatus.
    Don’t put candles or other burning objects on top of this unit.
17. Batteries
    Always consider the environmental issues and follow local regulations when disposing of batteries.
18. If you install the apparatus in a built-in installation, such as a bookcase or rack, ensure that there is adequate ventilation.
    Leave 20 cm (8") of free space at the top and sides and 10 cm (4") at the rear. The rear edge of the shelf or board above the apparatus shall be set 10 cm (4") away from the rear panel or wall, creating a flue-like gap for warm air to escape.

Precautions

1. **Recording Copyright**—Unless it's for personal use only, recording copyrighted material is illegal without the permission of the copyright holder.
2. **AC Fuse**—The AC fuse inside the unit is not user-serviceable. If you cannot turn on the unit, contact your Onkyo dealer.
3. **Care**—Occasionally you should dust the unit all over with a soft cloth. For stubborn stains, use a soft cloth dampened with a weak solution of mild detergent and water. Dry the unit immediately afterwards with a clean cloth. Don't use abrasive cloths, thinners, alcohol, or other chemical solvents, because they may damage the finish or remove the panel lettering.
4. **Power**
   WARNING
   BEFORE PLUGGING IN THE UNIT FOR THE FIRST TIME, READ THE FOLLOWING SECTION CAREFULLY.
   AC outlet voltages vary from country to country. Make sure that the voltage in your area meets the voltage requirements printed on the unit's rear panel (e.g., AC 230 V, 50 Hz or AC 120 V, 60 Hz).

   The power cord plug is used to disconnect this unit from the AC power source. Make sure that the plug is readily operable (easily accessible) at all times.

   For models with [**POWER**] button, or with both [**POWER**] and [**ON/STANDBY**] buttons:
   Pressing the [**POWER**] button to select OFF mode does not fully disconnect from the mains. If you do not intend to use the unit for an extended period, remove the power cord from the AC outlet.

   For models with [**ON/STANDBY**] button only:
   Pressing the [**ON/STANDBY**] button to select Standby mode does not fully disconnect from the mains. If you do not intend to use the unit for an extended period, remove the power cord from the AC outlet.
5. **Preventing Hearing Loss**
   Caution
   Excessive sound pressure from earphones and headphones can cause hearing loss.
6. **Batteries and Heat Exposure**
   Warning
   Batteries (battery pack or batteries installed) shall not be exposed to excessive heat as sunshine, fire or the like.
7. **Never Touch this Unit with Wet Hands**—Never handle this unit or its power cord while your hands are wet or damp. If water or any other liquid gets inside this unit, have it checked by your Onkyo dealer.
8. **Handling Notes**
   - If you need to transport this unit, use the original packaging to pack it how it was when you originally bought it.
   - Do not leave rubber or plastic items on this unit for a long time, because they may leave marks on the case.
   - This unit's top and rear panels may get warm after prolonged use. This is normal.
   - If you do not use this unit for a long time, it may not work properly the next time you turn it on, so be sure to use it occasionally.

For U.S. models

FCC Information for User
CAUTION:
The user changes or modifications not expressly approved by the party responsible for compliance could void the user's authority to operate the equipment.

NOTE:
This equipment has been tested and found to comply with the limits for a Class B digital device, pursuant to Part 15 of the FCC Rules. These limits are designed to provide reasonable protection against harmful interference in a residential installation.
This equipment generates, uses and can radiate radio frequency energy and, if not installed and used in accordance with the instructions, may cause harmful interference to radio communications. However, there is no guarantee that interference will not occur in a particular installation. If this equipment does cause harmful interference to radio or television reception, which can be determined by turning the equipment off and on, the user is encouraged to try to correct the interference by one or more of the following measures:

- Reorient or relocate the receiving antenna.
- Increase the separation between the equipment and receiver.
- Connect the equipment into an outlet on a circuit different from that to which the receiver is connected.
- Consult the dealer or an experienced radio/TV technician for help.

For Canadian Models

NOTE: THIS CLASS B DIGITAL APPARATUS COMPLIES WITH CANADIAN ICES-003.

For models having a power cord with a polarized plug:

CAUTION: TO PREVENT ELECTRIC SHOCK, MATCH WIDE BLADE OF PLUG TO WIDE SLOT, FULLY INSERT.

Modèle pour les Canadien

REMARQUE: CET APPAREIL NUMÉRIQUE DE LA CLASSE B EST CONFORME À LA NORME NMB-003 DU CANADA.

Sur les modèles dont la fiche est polarisée:

ATTENTION: POUR ÉVITER LES CHOCS ÉLECTRIQUES, INTRODUIRE LA LAME LA PLUS LARGE DE LA FICHE DANS LA BORNE CORRESPONDANTE DE LA PRISE ET POUSSER JUSQU'AU FOND.

For British models

Replacement and mounting of an AC plug on the power supply cord of this unit should be performed only by qualified service personnel.

IMPORTANT

The wires in the mains lead are coloured in accordance with the following code:

Blue: Neutral

Brown: Live

As the colours of the wires in the mains lead of this apparatus may not correspond with the coloured markings identifying the terminals in your plug, proceed as follows:

The wire which is coloured blue must be connected to the terminal which is marked with the letter N or coloured black.

The wire which is coloured brown must be connected to the terminal which is marked with the letter L or coloured red.

IMPORTANT

The plug is fitted with an appropriate fuse. If the fuse needs to be replaced, the replacement fuse must approved by ASTA or BSI to BS1362 and have the same ampere rating as that indicated on the plug. Check for the ASTA mark or the BSI mark on the body of the fuse.

If the power cord's plug is not suitable for your socket outlets, cut it off and fit a suitable plug. Fit a suitable fuse in the plug.

For European Models

Declaration of Conformity

We, ONKYO EUROPE ELECTRONICS GmbH
LIEGNITZERSTRASSE 6,
82194 GROEBENZELL,
GERMANY

declare in own responsibility, that the ONKYO product described in this instruction manual is in compliance with the corresponding technical standards such as EN60065, EN55013, EN55020 and EN61000-3-2, -3-3.

GROEBENZELL, GERMANY

K. MIYAGI

ONKYO EUROPE ELECTRONICS GmbH

Supplied Accessories

Make sure you have the following accessories:

Indoor FM antenna (→ page 22)
AM loop antenna (→ page 22)
Power cord (→ page 22)
Speaker cable labels (→ page 15)
Speaker setup microphone (→ page 38)
Remote controller (RC-840M) and two batteries (AA/R6) (Note for China: The battery for the remote controller is not supplied for this unit.)
Quick Start Guide

* In catalogs and on packaging, the letter at the end of the product name indicates the color. Specifications and operations are the same regardless of color.

Installing the batteries

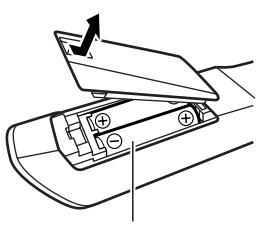

Batteries (AA/R6)

Note

- If the remote controller doesn't work reliably, try replacing the batteries.
- Don't mix new and old batteries or different types of batteries.
- If you intend not to use the remote controller for a long time, remove the batteries to prevent damage from leakage or corrosion.
- Remove expired batteries as soon as possible to prevent damage from leakage or corrosion.

Aiming the remote controller

To use the remote controller, point it at the AV receiver's remote control sensor, as shown below.

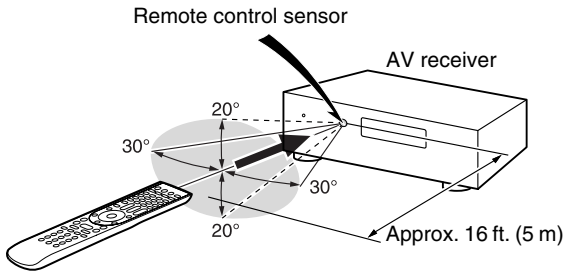

Thank you for purchasing an Onkyo AV Receiver. Please read this manual thoroughly before making connections and plugging in the unit. Following the instructions in this manual will enable you to obtain optimum performance and listening enjoyment from your new AV Receiver. Please retain this manual for future reference.

Table of Contents

Safety Information and Introduction

Important Safety Instructions **2**
Precautions **3**
Supplied Accessories **5**
Table of Contents **6**
Features **7**
Front & Rear Panels **8**
Remote Controller **12**

Connections

Connecting the AV Receiver **13**
Connecting Your Speakers 13
About AV Connections 18
Connecting Components with HDMI 19
Connecting Your Components 20
Connecting Onkyo RI Components 21
Connecting the Antennas 22
Connecting the Power Cord 22

Turning On & Basic Operations

Turning On/Off the AV Receiver **23**
Turning On 23
Turning Off 23
Initial Setup **24**
Selecting the Language for the Onscreen Setup Menus 24
Audyssey MultEQ XT32: Auto Setup 24
Source Connection 25
Remote Mode Setup 25
Network Connection 25
Terminating the Initial Setup 25

Playback **26**
Playing the Connected Component 26
Controlling Contents of USB or Network Devices 27
Understanding Icons on the Display 28
Playing an iPod/iPhone via USB 28
Playing a USB Device 29
Listening to vTuner Internet Radio 29
Registering Other Internet Radio 30
Changing the Icon Layout on the Network Service Screen 31
Playing Music Files on a Server (DLNA) 31
Remote Playback 32
Playing Music Files on a Shared Folder 33
Listening to AM/FM Radio 34
Playing Audio and Video from Separate Sources 36
Using Basic Functions **37**
Using the Automatic Speaker Setup 37
Using the Listening Modes 40
Using the Home Menu 47
Using the Sleep Timer 48
Setting the Display Brightness 48
Displaying Source Information 48
Changing the Input Display 48
Using the Whole House Mode 49
Selecting Speaker Layout 49
Muting the AV Receiver 49
Using Headphones 49
Using Easy Macros 50

Advanced Operations

On-screen Setup **51**
Using the Quick Setup 51
Using the Audio Settings of Quick Setup 52
Using the Setup Menu (HOME) 55
About the HYBRID STANDBY Indicator 56
Setup Menu Items 56
Input/Output Assign 57
Speaker Setup 59
Audio Adjust 64
Source Setup 67
Listening Mode Preset 72
Miscellaneous 73
Hardware Setup 74
Remote Controller Setup 77
Lock Setup 77

Multi Zone **78**
Making Multi Zone Connections 78
Controlling Multi Zone Components 79
Using the Remote Controller in Zone and Multiroom Control Kits 81

Controlling Other Components

iPod/iPhone Playback via Onkyo Dock **82**
Using the Onkyo Dock 82
Controlling Your iPod/iPhone 83
Controlling Other Components **84**
Preprogrammed Remote Control Codes 84
Looking up for Remote Control Codes 84
Entering Remote Control Codes 85
Remapping Colored Buttons 85
Remote Control Codes for Onkyo Components Connected via RI 86
Resetting the REMOTE MODE Buttons 86
Resetting the Remote Controller 86
Controlling Other Components 86
Learning Commands 89
Using Normal Macros 90

Appendix

Troubleshooting **91**
Firmware Update **97**
Connection Tips and Video Signal Path **101**
Using an RIHD-compatible TV, Player, or Recorder **104**
About HDMI **106**
Network/USB Features **107**
License and Trademark Information **110**
Specifications **111**

To reset the AV receiver to its factory defaults, turn it on and, while holding down CBL/SAT, press ⏻ON/STANDBY (➔ page 91).

Features

Amplifier

- 135 Watts/Channel @ 8 ohms (FTC)
- 180 Watts/Channel @ 6 ohms (IEC)
- 230 Watts/Channel @ 6 ohms (JEITA)
- WRAT–Wide Range Amplifier Technology (5 Hz to 100 kHz bandwidth)
- Linear Optimum Gain Volume Circuitry
- H.C.P.S. (High Current Power Supply) Massive High Power Transformer
- 3 Stage Inverted Darlington Amplifier Design

Processing

- THX Select2 Plus Certified
- Incorporates Qdeo™ technology for HDMI Video Upscaling (to 4K Compatible)
- HQV®-Vida Video Processing with 1080p Video upscaling of All Video Sources via HDMI
- HDMI (Audio Return Channel, 3D, DeepColor, x.v.Color, Lip Sync, DTS-HD Master Audio, DTS-HD High Resolution Audio, Dolby TrueHD, Dolby Digital Plus, DSD and Multi-CH PCM)
- Dolby TrueHD and DTS-HD Master Audio
- Dolby Pro Logic IIz and Audyssey DSX®
- DTS Neo:X
- Non-Scaling Configuration
- A-Form Listening Mode Memory
- Direct Mode
- Pure Audio Mode
- Music Optimizer for Compressed Digital Music files
- 192 kHz/24-bit D/A Converters
- Powerful and Highly Accurate 32-bit Processing DSP
- Jitter Cleaning Circuit Technology
- Digital Processing Crossover Network

Connections

- 8 HDMI Inputs (1 on front panel) and 2 Outputs
- Onkyo RIHD for System Control
- 6 Digital Inputs (3 Optical/3 Coaxial)
- Component Video Switching (2 Inputs/1 Output)
- Banana Plug-Compatible Speaker Posts
  * In Europe, using banana plugs to connect speakers to an audio amplifier is prohibited.
- Powered Zone 2/3
- Bi-Amping Capability for FL/FR with FHL/FHR
- Analog RGB Video Input (D-sub 15) for PC
- Internet Radio Connectivity
- Network Capability for Streaming Audio Files
- 2 USB Inputs (Front/Rear) for Memory Devices and iPod®/iPhone® models (Enables Display of Album Artwork)
  * Only the front-panel USB input is compatible with iPod/iPhone.
- MHL-Enabled AUX Front Input

Miscellaneous

- 40 FM/AM Presets
- Dolby Volume
- Audyssey MultEQ® XT32 to correct room acoustic problems
- Audyssey Dynamic EQ® for loudness correction
- Audyssey Dynamic Volume® to maintain optimal listening level and dynamic range
- Crossover Adjustment (40/50/60/70/80/90/100/120/150/200 Hz)
- A/V Sync Control Function (up to 800 ms)
- Auto Standby Function
- On-Screen Display via HDMI
- Preprogrammed (with onscreen display setup) RI-Compatible Learning Remote with 4 Activities and Mode-Key LEDs
- ISF (Imaging Science Foundation) Video Calibration

Front & Rear Panels

Front Panel

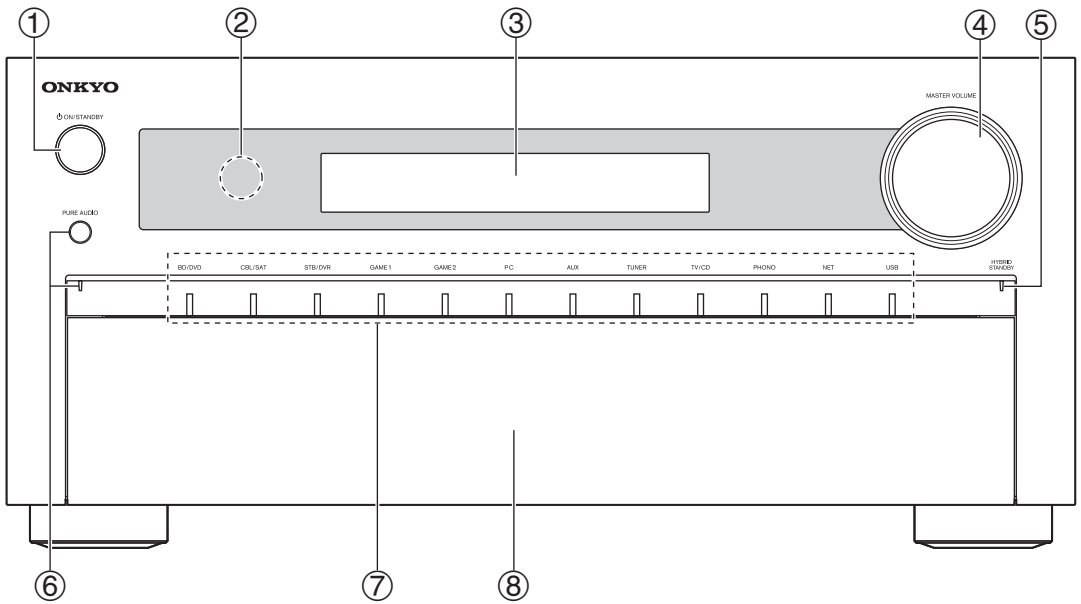

(North American models)

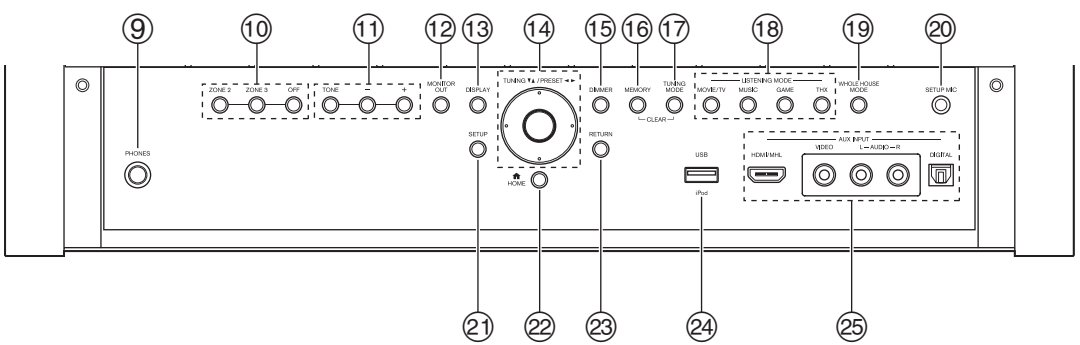

(European, Australian and Asian models)

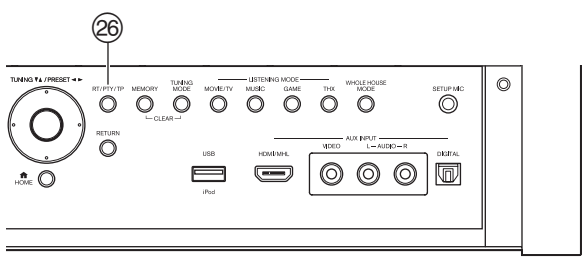

The AV receiver has various logos printed on it. They are not shown here for clarity.
For detailed information, see the pages in parentheses.

① **⏻ON/STANDBY button (23)**
② **Remote control sensor (5)**
③ **Display (10)**
④ **MASTER VOLUME control and indicator (26)**
⑤ **HYBRID STANDBY indicator (56)**
⑥ **PURE AUDIO button and indicator (40)**
⑦ **Input selector buttons (26)**
⑧ **Front flap**
Gently push on the lower end of the front panel to open the flap.

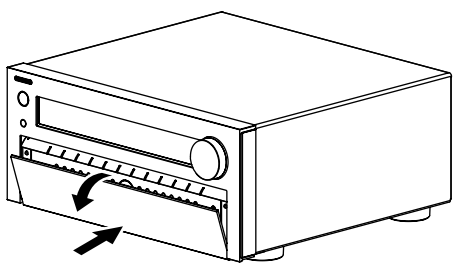

⑨ **PHONES jack (49)**
⑩ **ZONE 2, ZONE 3, and OFF buttons (79)**
⑪ **TONE and Tone Level buttons (52)**
⑫ **MONITOR OUT button (57)**
⑬ **DISPLAY button (48)**
⑭ **TUNING ▲/▼ (34), PRESET ◄/► (34), cursor and enter (middle) buttons**
⑮ **DIMMER button (North American models) (48)**
⑯ **MEMORY button (34)**
⑰ **TUNING MODE button (34)**
⑱ **LISTENING MODE buttons (40)**
⑲ **WHOLE HOUSE MODE button (49)**
⑳ **SETUP MIC jack (38)**
㉑ **SETUP button (55)**
㉒ **HOME button (47, 55)**
㉓ **RETURN button**
㉔ **USB port (20)**
㉕ **AUX INPUT jacks (19, 20)**
㉖ **RT/PTY/TP button (European, Australian and Asian models) (35)**

Display

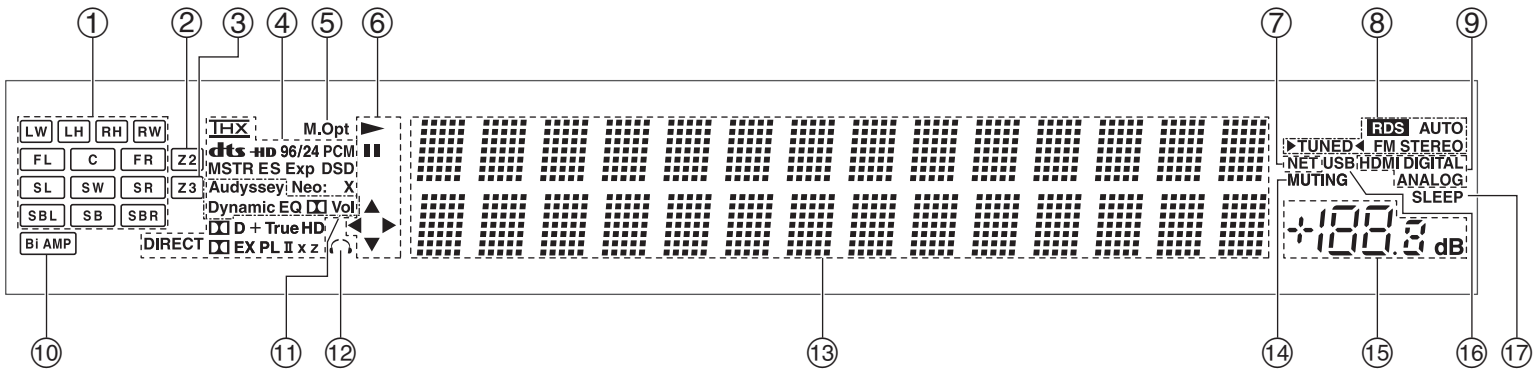

For detailed information, see the pages in parentheses.

① **Speaker/channel indicators**

② **Z2 (Zone 2) indicator (79)**

③ **Z3 (Zone 3) indicator (79)**

④ **Listening mode and format indicators (40)**

⑤ **M.Opt indicator (53)**

⑥ **►, ❚❚ and cursor indicators (28)**

⑦ **NET indicator (29 to 33, 77)**

⑧ **Tuning indicators**

RDS indicator (excluding North American models) (35)

AUTO indicator (34)

TUNED indicator (34)

FM STEREO indicator (34)

⑨ **Input indicators (102)**

HDMI indicator (75)

DIGITAL indicator

ANALOG indicator

⑩ **Bi AMP indicator**

⑪ **Audyssey indicator (37, 67)**

Dynamic EQ indicator (67)

(Dolby) Vol indicator

Dynamic Vol indicator (68)

⑫ **Headphone indicator (49)**

⑬ **Message area**

⑭ **MUTING indicator (49)**

⑮ **Volume level**

⑯ **USB indicator (28, 29)**

⑰ **SLEEP indicator (48)**

Rear Panel

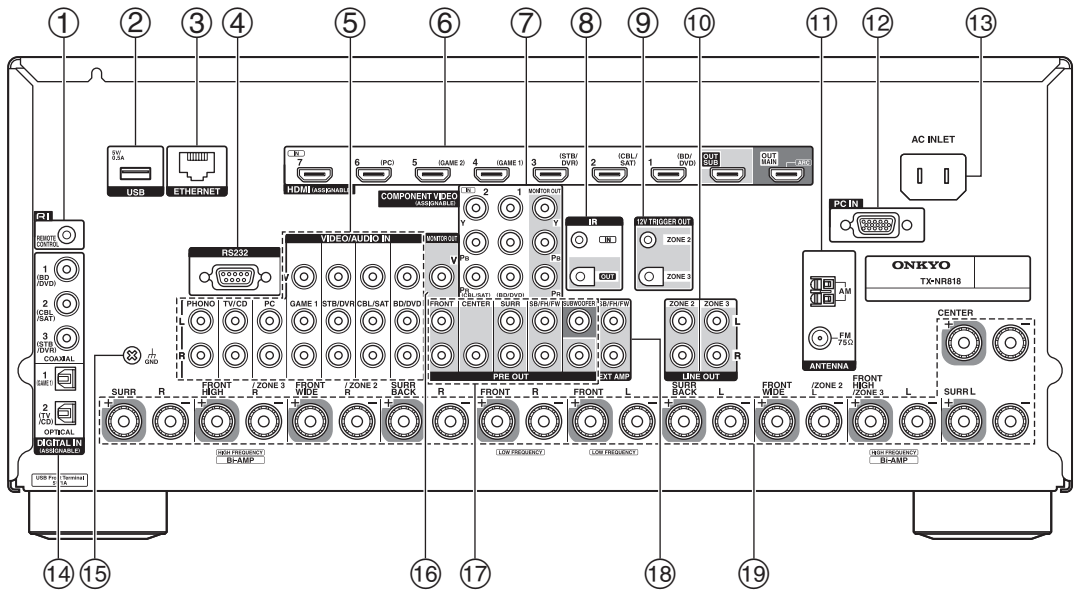

① **RI REMOTE CONTROL jack**

② **USB port**

③ **ETHERNET port**

④ **RS232 port**
Terminal for control.

⑤ **Composite video and analog audio jacks**
(BD/DVD IN, CBL/SAT IN, STB/DVR IN, GAME 1 IN, PC IN, TV/CD IN and PHONO IN)

⑥ **HDMI IN and HDMI output (HDMI OUT MAIN and HDMI OUT SUB) jacks**

⑦ **COMPONENT VIDEO IN and MONITOR OUT jacks**

⑧ **IR IN and OUT jacks**

⑨ **ZONE 2 and ZONE 3 12V TRIGGER OUT jacks**

⑩ **ZONE 2/ZONE 3 LINE OUT jacks**

⑪ **FM ANTENNA jack and AM ANTENNA terminal**

⑫ **PC IN jack**

⑬ **AC INLET**

⑭ **DIGITAL IN COAXIAL and OPTICAL jacks**

⑮ **GND screw**

⑯ **MONITOR OUT V jack**

⑰ **PRE OUT jacks**
(FRONT L/R, CENTER, SURR L/R, SB/FH/FW*, SUBWOOFER)

⑱ **SB/FH/FW EXT AMP* jacks**

⑲ **Speaker Terminals**
(FRONT L/R, CENTER, SURR L/R, SURR BACK L/R, FRONT HIGH/ZONE 3 L/R and FRONT WIDE/ZONE 2 L/R)

See “Connecting the AV Receiver” for connection (➔ **pages 13** to **22**).

* **SB**···Surround Back, **FH**···Front High, **FW**···Front Wide

Remote Controller

Controlling the AV Receiver



To control the AV receiver, press RECEIVER to select Receiver mode.
You can also use the remote controller to control Onkyo Blu-ray Disc/DVD player, CD player, and other components.
See "Entering Remote Control Codes" for more details (→ page 85).

For detailed information, see the pages in parentheses.

① ⏻ **RECEIVER button (23)**
② **ACTIVITIES buttons (50)**
③ **REMOTE MODE/INPUT SELECTOR buttons (26)**
④ **SP (speaker layout) button (49)**
⑤ **▲/▼/◄/► and ENTER buttons**
⑥ **Q SETUP button (51)**
⑦ **Listening Mode buttons (40)**
⑧ **DIMMER button (48)**
⑨ **DISPLAY button (48)**
⑩ **MUTING button (49)**
⑪ **VOL ▲/▼ button (26)**
⑫ **RETURN button**
⑬ **HOME button (47)**
⑭ **SLEEP button (48)**

Controlling the tuner

To control the AV receiver's tuner, press **TUNER** (or **RECEIVER**).
You can select AM or FM by pressing **TUNER** repeatedly.

❶ **▲/▼ buttons (34)**
❷ **D.TUN button (34)**
❸ **DISPLAY button**
❹ **CH +/– button (35)**
❺ **Number buttons (34)**

*1 When you want to change the remote controller mode (target component) without changing the current input source, press **MODE** and within about 8 seconds, press **REMOTE MODE**. Then, using the same AV receiver's remote controller, you can control the component corresponding to the button you pressed.
*2 These buttons can also be used when a **REMOTE MODE** other than Receiver mode is selected.

Connecting the AV Receiver

Connecting Your Speakers

Speaker Configuration

The following table indicates the channels you should use depending on the number of speakers that you have.

No matter how many speakers you use, a powered subwoofer is recommended for a really powerful and solid bass.

To get the best from your surround sound system, you need to set the speaker settings automatically (➔ page 37) or manually (➔ page 60).

Number of speakers	2	3	4	5	6	7	7	7	8	8	9	9	9	10	11
Front speakers	✔	✔	✔	✔	✔	✔	✔	✔	✔	✔	✔	✔	✔	✔	✔
Center speaker		✔		✔	✔	✔	✔	✔	✔	✔	✔	✔	✔	✔	✔
Surround speakers			✔	✔	✔	✔	✔	✔	✔	✔	✔	✔	✔	✔	✔
Surround back speaker[*1][*2]					✔				✔	✔				✔	
Surround back speakers[*2]						✔					✔	✔			✔
Front high speakers[*2]							✔		✔		✔		✔	✔	✔
Front wide speakers[*2]								✔		✔		✔	✔	✔	✔

[*1] If you're using only one surround back speaker, connect it to the **SURR BACK L** terminals.

[*2] Front high, surround back and front wide speakers cannot be used at the same time.

Connecting the Speaker Cables

The following illustration shows how to connect the speakers to each pair of terminals. If you're using only one surround back speaker, connect it to the **SURR BACK L** terminals.

Tip

- You can specify whether surround back, front high, or front wide speakers are connected in the "Speaker Configuration" menu (➔ page 60) or during Audyssey MultEQ® XT32 Room Correction and Speaker Setup (➔ page 37).

■ Screw-type speaker terminals

Strip 1/2" to 5/8" (12 to 15 mm) of insulation from the ends of the speaker cables, and twist the bare wires tightly, as shown.

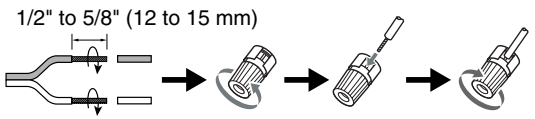

■ Banana Plugs (North American models)

- If you are using banana plugs, tighten the speaker terminal before inserting the banana plug.
- Do not insert the speaker code directly into the center hole of the speaker terminal.

■ 7.1-channel playback

Select the speakers (surround back, front high, front wide) you want to use for 7.1-channel playback.
You can set which speakers you want to use by priority. See “Selecting Speaker Layout” (➔ page 49).

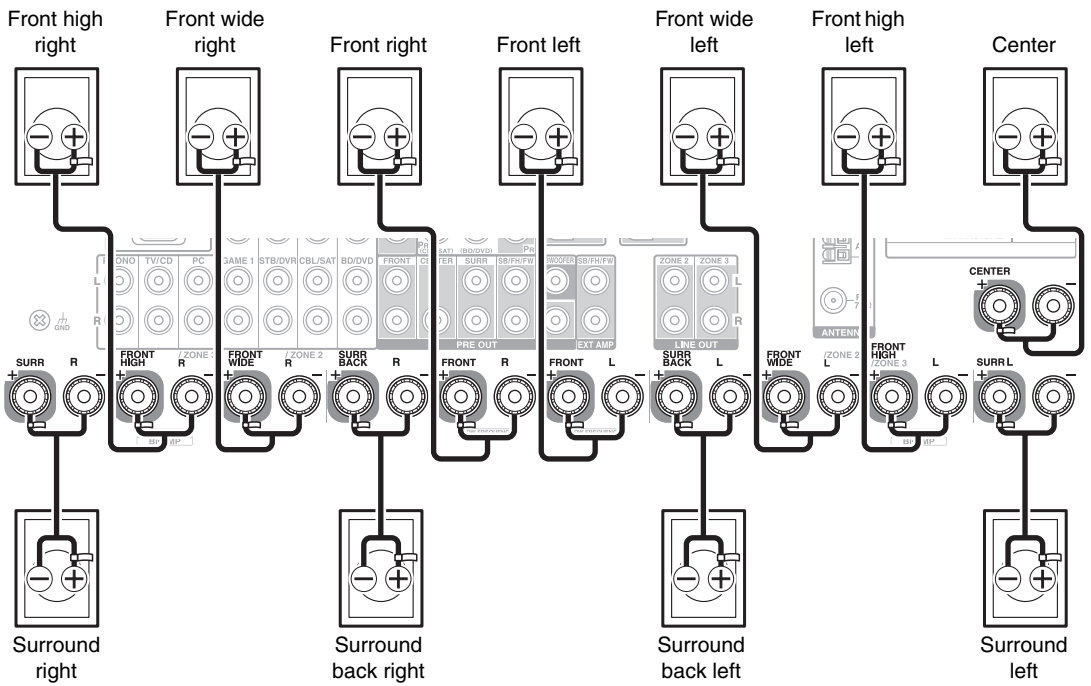

■ 9.1-channel playback

By adding an external amplifier to the 7.1-channel configuration shown on the left, you can enjoy 9.1-channel playback.
Connect your power amplifier’s analog audio input jacks to the AV receiver’s **SB/FH/FW EXT AMP**[*1] jacks with audio cables. To use the **SB/FH/FW EXT AMP** jacks, you must specify their channel with the “**Preout to External Amplifier**” setting (➔ page 59).
You can set which speakers you want to use by priority. See “Selecting Speaker Layout” (➔ page 49).

*1 **SB**···Surround Back, **FH**···Front High, **FW**···Front Wide

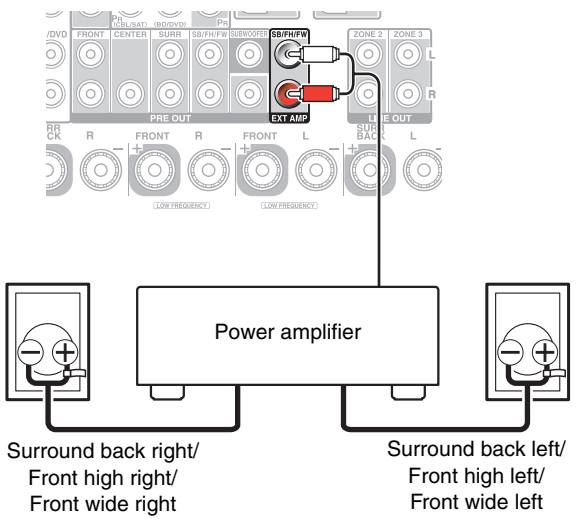

Attaching the Speaker Cable Labels

The speaker terminals are color-coded for identification purpose.

Speaker	Color
Front left, Front high left, Front wide left, Zone 2 left, Zone 3 left	White
Front right, Front high right, Front wide right, Zone 2 right, Zone 3 right	Red
Center	Green
Surround left	Blue
Surround right	Gray
Surround back left	Brown
Surround back right	Tan

The supplied speaker cable labels are also color-coded and you should attach them to the positive (+) side of each speaker cable in accordance with the table above. Then all you need to do is to match the color of each label to the corresponding speaker terminal.

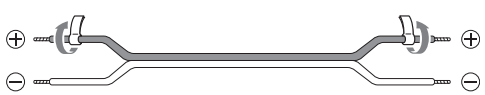

Speaker Connection Precautions

Read the following before connecting your speakers:

- You can connect speakers with an impedance of between 4 and 16 ohms. If the impedance of any of the connected speakers is 4 ohms or more, but less than 6 ohms, be sure to set the minimum speaker impedance to "**4ohms**" (➔ page 59). If you use speakers with a lower impedance, and use the amplifier at high volume levels for a long period of time, the built-in protection circuit may be activated.
- Disconnect the power cord from the wall outlet before making any connections.
- Read the instructions supplied with your speakers.
- Pay close attention to speaker wiring polarity. In other words, connect positive (+) terminals only to positive (+) terminals, and negative (–) terminals only to negative (–) terminals. If you get them the wrong way around, the sound will be out of phase and will sound unnatural.
- Unnecessarily long, or very thin speaker cables may affect the sound quality and should be avoided.
- Be careful not to short the positive and negative wires. Doing so may damage the AV receiver.
- Make sure the metal core of the wire does not have contact with the AV receiver's rear panel. Doing so may damage the AV receiver.

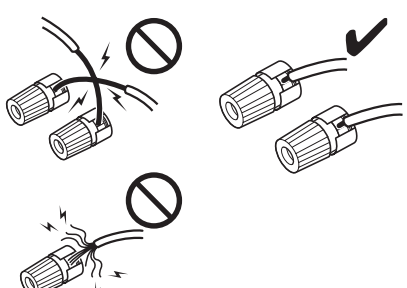

- Don't connect more than one cable to each speaker terminal. Doing so may damage the AV receiver.
- Don't connect one speaker to several terminals.

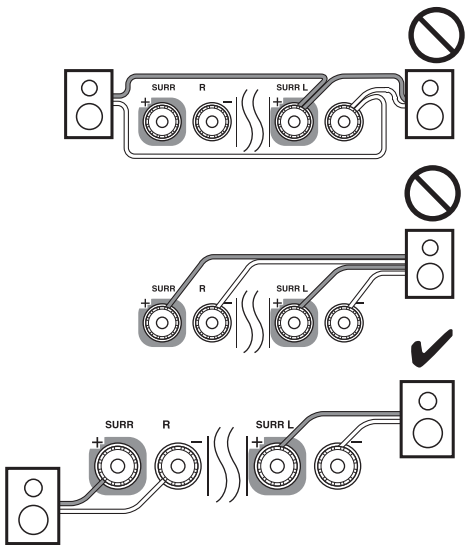

Using Dipole Speakers

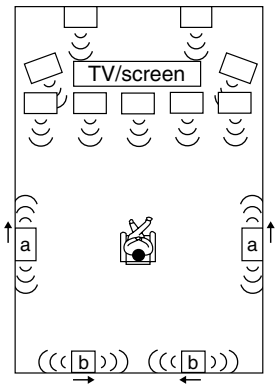

You can use dipole speakers for the surround and surround back speakers. Dipole speakers output the same sound in two directions.

Dipole speakers typically have an arrow printed on them to indicate how they should be positioned. The surround dipole speakers (a) should be positioned so that their arrows point toward the TV/screen, while the surround back dipole speakers (b) should be positioned so that their arrows point toward each other, as shown.

Using Powered Subwoofers

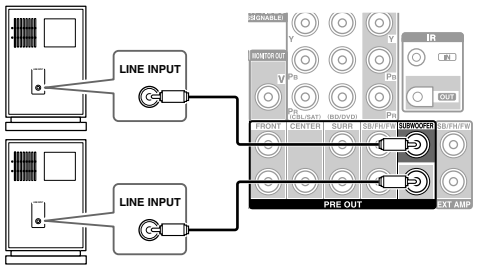

Powered subwoofer

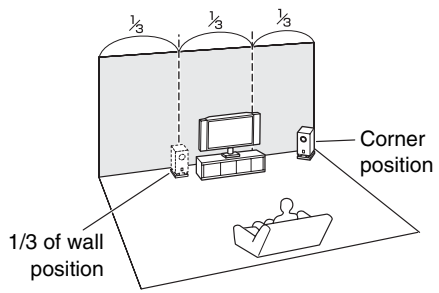

To find the best position for your subwoofer, while playing a movie or some music with good bass, experiment by placing your subwoofer at various positions within the room, and choose the one that provides the most satisfying results.

You can connect the powered subwoofer with two **SUBWOOFER PRE OUT** jacks respectively.

The same signal is output from each jack.

Tip

- If your subwoofer is unpowered and you're using an external amplifier, connect the subwoofer pre out jack to an input on the amplifier.

Bi-amping the Front Speakers

Important:

- When making the bi-amping connections, be sure to remove the jumper bars that link the speakers' tweeter (high) and woofer (low) terminals.
- Bi-amping can be used only with speakers that support bi-amping. Refer to your speaker manual.

Bi-amping provides improved bass and treble performance. When bi-amping is used, the AV receiver is able to drive up to a 5.1 speaker system in the main room.

Once you've completed the bi-amping connections as shown and turned on the AV receiver, you must set the speaker setting to enable bi-amping (➔ page 59).

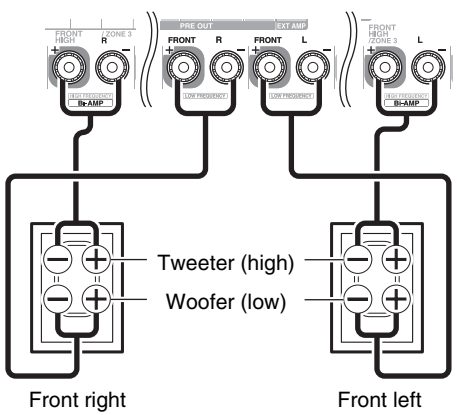

Connecting a Power Amplifier

If you want to use a more powerful power amplifier, you can use the AV receiver as a preamp. Connect all speaker outputs to the power amplifier. See the manuals supplied with your amplifier for details.

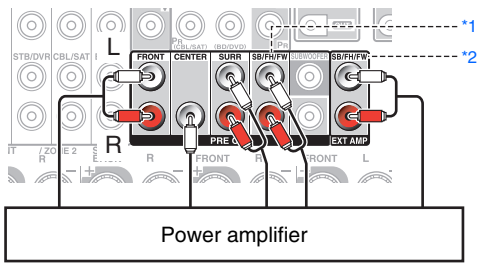

SB···Surround Back, **FH**···Front High, **FW**···Front Wide

Note

*1 Specify "**None**" for any channel that you don't want to output (➔ page 60).

*2 When connecting to the **SB/FH/FW EXT AMP** jacks, you must set the "**Preout to External Amplifier**" setting (➔ page 59).

Using Speakers Without Crossover Network

Important:

- Speakers without crossover network are speakers with no built-in crossover network.
- With speakers without crossover network, be careful **NOT** to connect tweeters and woofers the wrong way around, as this may damage your speakers.
- With speakers without crossover network, be careful not to set "**Speaker Type (Front)**" to "**Bi-Amp**" as this may damage your speakers. Make sure that this setting is set to "**Digital Crossover**".
- Confirm that your speakers are without crossover network by referring to your speaker manual.

Connecting speakers without crossover network provide a fine, three-dimensional sound field that extends bass and treble performance to the fullest extent. When speakers without crossover network are used, the AV receiver is able to drive up to a 5.1 speaker system in the main room. You must enable "**Digital Crossover**" in "**Speaker Type (Front)**" (➔ page 59) and make the settings of "**Digital Processing Crossover Network**" (➔ page 63).

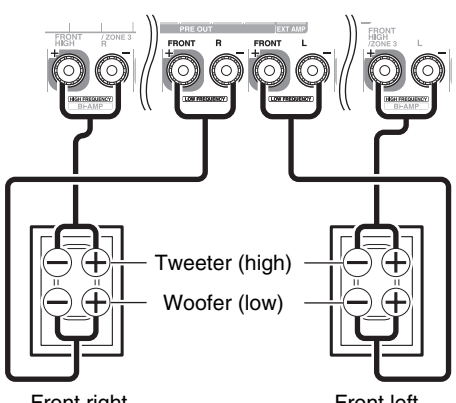

Note

- You need to make the setting before connecting the speakers.

About AV Connections

Connecting AV components

HDMI cable

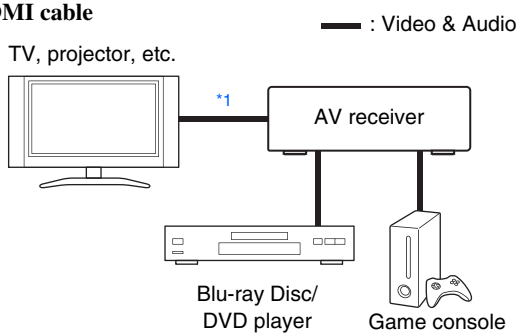

Other cables

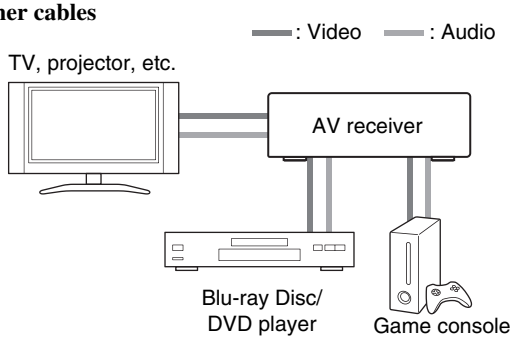

*1 If your TV doesn't support Audio Return Channel (ARC), you need to connect an optical digital cable together with the HDMI cable to the AV receiver.

- Before making any AV connections, read the manuals supplied with your AV components.
- Don't connect the power cord until you've completed and double-checked all AV connections.

- Push plugs in all the way to make good connections (loose connections can cause noise or malfunctions).
- To prevent interference, keep audio and video cables away from power cords and speaker cables.

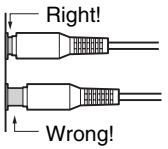

AV Cables and Jacks

HDMI

HDMI connections can carry digital video and audio.



Component video

Component video separates the luminance (Y) and color difference signals (PB, PR), providing the best picture quality (some TV manufacturers label their component video sockets slightly differently).

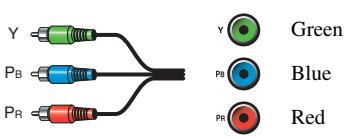

Analog RGB

This is a conventional analog interface to connect a PC and a display device (also called D-Sub or D-subminiature).



Composite video

Composite video is commonly used on TVs, DVDs, and other video equipment.



Optical digital audio

Optical digital connections allow you to enjoy digital sound such as PCM*2, Dolby Digital or DTS. The audio quality is the same as coaxial.



Coaxial digital audio

Coaxial digital connections allow you to enjoy digital sound such as PCM*2, Dolby Digital or DTS. The audio quality is the same as optical.



Analog audio (RCA)

Analog audio connections (RCA) carry analog audio.



*2 For PCM signals, the supported sampling rates are 32/44.1/48/88.2/96 kHz. With HDMI connections, 176.4 and 192 kHz are also supported.

Note

- The AV receiver does not support SCART plugs.
- The AV receiver's optical digital jacks have shutter-type covers that open when an optical plug is inserted and close when it's removed. Push plugs in all the way.

Caution

- To prevent shutter damage, hold the optical plug straight when inserting and removing.

Connecting Components with HDMI

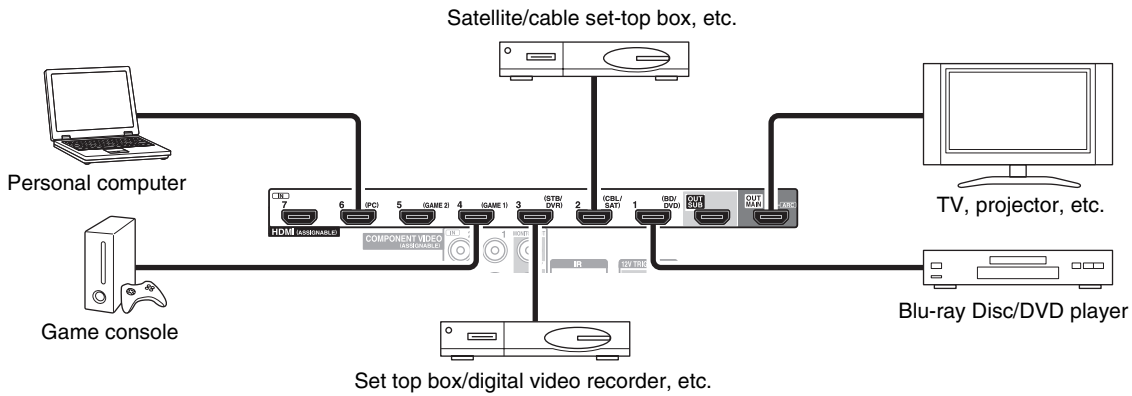

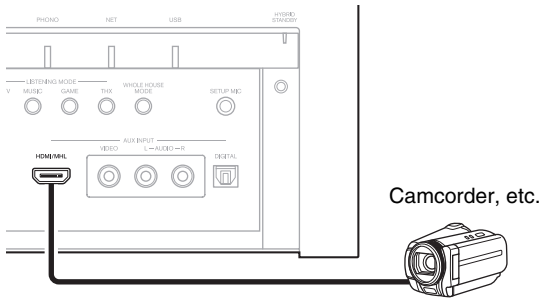

* If your TV doesn't support Audio Return Channel (ARC), you need to connect an optical digital cable together with the HDMI cable to the AV receiver.
* When listening to an HDMI component through the AV receiver, set the HDMI component so that its video can be seen on the TV screen (on the TV, select the input of the HDMI component connected to the AV receiver). If the TV power is off or the TV is set to another input source, this may result in no sound from the AV receiver or the sound may be cut off.

Connect your components to the appropriate jacks. The default input assignments are shown below.

✔: Assignment can be changed (➔ page 58).

Jack	Components	
IN1	Blu-ray Disc/DVD player	✔
IN2	Satellite/cable set-top box, etc.	✔
IN3	Set top box/digital video recorder, etc.	✔
IN4	Game console	✔
IN5	Game console	✔
IN6	Personal computer	✔
IN7	Other components	✔
Front	Camcorder, etc.	
OUT MAIN	TV	
OUT SUB	Projector, etc.	

See also:

- "Connection Tips and Video Signal Path" (➔ page 101)
- "Using an RIHD-compatible TV, Player, or Recorder" (➔ page 104)
- "About HDMI" (➔ page 106)

Tip

- To listen to the audio of a component connected via HDMI through your TV's speakers, enable "**HDMI Through**" (➔ page 75) and set the AV receiver to standby mode.

Note

- In the case of Blu-ray Disc/DVD players, if no sound is output despite following the above-mentioned procedure, set your Blu-ray Disc/DVD player's HDMI audio settings to PCM.

Audio Return Channel (ARC) function

The Audio Return Channel (ARC) function enables an HDMI capable TV to send the audio stream to **HDMI OUT MAIN** on the AV receiver.

- This function can be used when:
  – Your TV is ARC capable, and
  – The **TV/CD** input selector is selected, and
  – "**HDMI Control(RIHD)**" is set to "**On**"(➔ page 75), and
  – "**Audio Return Channel**" is set to "**Auto**" (➔ page 76).

MHL (Mobile High-Definition Link)

With its support for MHL (Mobile High-Definition Link), the AUX (Front) input allows you to deliver high-definition video from a connected mobile device.

Connecting Your Components

The on-screen menus appear only on a TV that is connected to HDMI OUT MAIN. If your TV is connected to other video outputs, use the AV receiver's display when changing settings.

Front

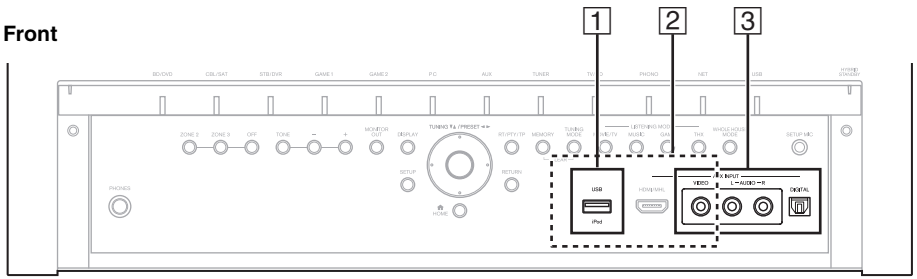

Rear

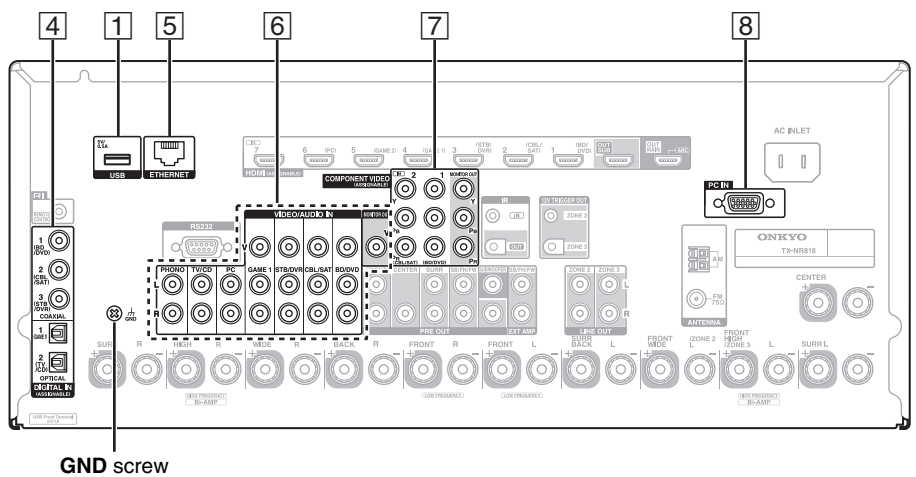

Connect your components to the appropriate jacks. The default input assignments are shown below. See "Connection Tips and Video Signal Path" for more information (➔ page 101).

✔: Assignment can be changed (➔ page 58).

No.	Jack/Port	Components	
1	USB*1*2	iPod/iPhone, MP3 player, USB flash drive	
2	USB, AUX INPUT VIDEO*3	iPod/iPhone (video playback)	
3	AUX INPUT		
	VIDEO	Camcorder, etc	
	AUDIO L/R		
	DIGITAL		
4	DIGITAL IN		
	COAXIAL 1 (BD/DVD)	Blu-ray Disc/DVD player	✔
	COAXIAL 2 (CBL/SAT)	Satellite/cable set-top box, etc.	✔
	COAXIAL 3 (STB/DVR)	Set top box/digital video recorder, etc	✔
	OPTICAL 1 (GAME 1)	Game consoles	✔
	OPTICAL 2 (TV/CD)	TV, CD player	✔
5	ETHERNET	Router	
6	MONITOR OUT	TV, projector, etc.	
	BD/DVD IN	Blu-ray Disc/DVD player	
	CBL/SAT IN	Satellite/cable set-top box, etc.	
	STB/DVR IN	Set top box/digital video recorder, etc	
	GAME 1 IN	Game console, RI dock	
	PC IN	Personal computer	
	TV/CD IN	TV, CD player, cassette tape deck, MD, CD-R, Turntable*4, RI dock	
	PHONO IN	Turntable*4	

↳ To be continued

No.	Jack/Port	Components	
7	COMPONENT VIDEO		
	MONITOR OUT	TV, projector, etc.	
	IN 1 (BD/DVD)	Blu-ray Disc/DVD player, RI dock	✔
	IN 2 (CBL/SAT)	Satellite/cable set-top box, RI dock, etc.	✔
8	PC IN*5	Personal computer	

Note

*1 Do not connect the AV receiver's **USB** port to a USB port on your computer. Music on your computer cannot be played through the AV receiver in this way.

*2 Only the front-panel USB input is compatible with iPod/iPhone.

*3 When the **USB** input is selected, you can input video signals from the **AUX INPUT VIDEO** jack. Video signals input from **AUX INPUT VIDEO** will be output from the **MONITOR OUT V** and HDMI output jacks.

*4 Connect a turntable (MM) that has a built-in phono preamp to **TV/CD IN**, or connect it to **PHONO IN** with the phono preamp turned off. If your turntable (MM) doesn't have a phono preamp, connect it to **PHONO IN**. If your turntable has a moving coil (MC) type cartridge, you'll need a commercially available MC head amp or MC transformer to connect to **PHONO IN**. See your turntable's manual for details.
If your turntable has a ground wire, connect it to the AV receiver's **GND** screw. With some turntables, connecting the ground wire may produce an audible hum. If this happens, disconnect it.

*5 When you connect your personal computer to **PC IN** and select the **PC** input selector, the video of the personal computer is output from the HDMI outputs. However, if you have assigned the HDMI inputs to the **PC** input selector, the AV receiver will output signals received from the HDMI inputs instead of signals from **PC IN**. To have the signals output from **PC IN**, select "**- - - - -**" for "**PC**" in the "**HDMI Input**" setting (➔ page 58).

- With connection 4, you can enjoy Dolby Digital and DTS. (To listen in Zone 2/3 as well, use 4 and 6.)
- With connection 6, you can enjoy audio from external components while you are in Zone 2/3.
- With connection 6, if your Blu-ray Disc/DVD player has both the main stereo and multichannel outputs, be sure to connect the main stereo.

Connecting Onkyo RI Components

1 Make sure that each Onkyo component is connected with an analog audio cable (connection 6 in the hookup examples) (➔ page 20).

2 Make the RI connection (see the illustration).

3 If you're using an RI Dock, or cassette tape deck, change the Input Display (➔ page 48).

With RI (Remote Interactive), you can use the following special functions:

System On/Auto Power On

When you start playback on a component connected via RI, while the AV receiver is on standby, the AV receiver will automatically turn on and select that component as the input source.

Direct Change

When playback is started on a component connected via RI, the AV receiver automatically selects that component as the input source.

Remote Control

You can use the AV receiver's remote controller to control your other RI-capable Onkyo components, pointing the remote controller at the AV receiver's remote control sensor instead of the component. You must enter the appropriate remote control code first (➔ page 86).

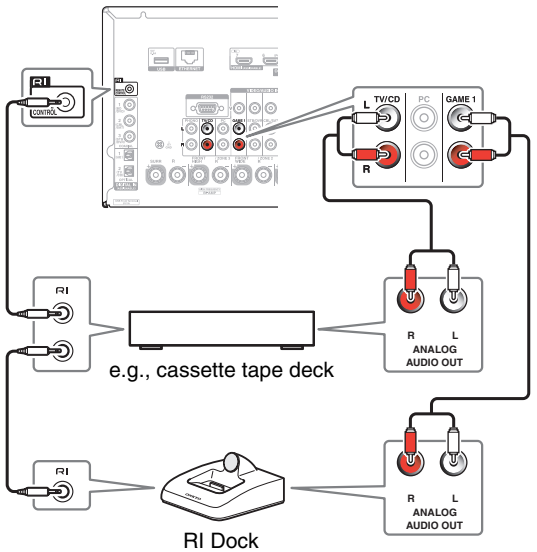

Note

- Use only RI cables for RI connections. RI cables are supplied with Onkyo components.
- Some components have two RI jacks. You can connect either one to the AV receiver. The other jack is for connecting additional RI-capable components.
- Connect only Onkyo components to RI jacks. Connecting other manufacturer's components may cause a malfunction.
- Some components may not support all RI functions. Refer to the manuals supplied with your Onkyo components.
- While Zone 2/3 is on, the System On/Auto Power On and Direct Change RI functions do not work.

Connecting the Antennas

This section explains how to connect the supplied indoor FM antenna and AM loop antenna.
The AV receiver won't pick up any radio signals without any antenna connected, so you must connect the antenna to use the tuner.

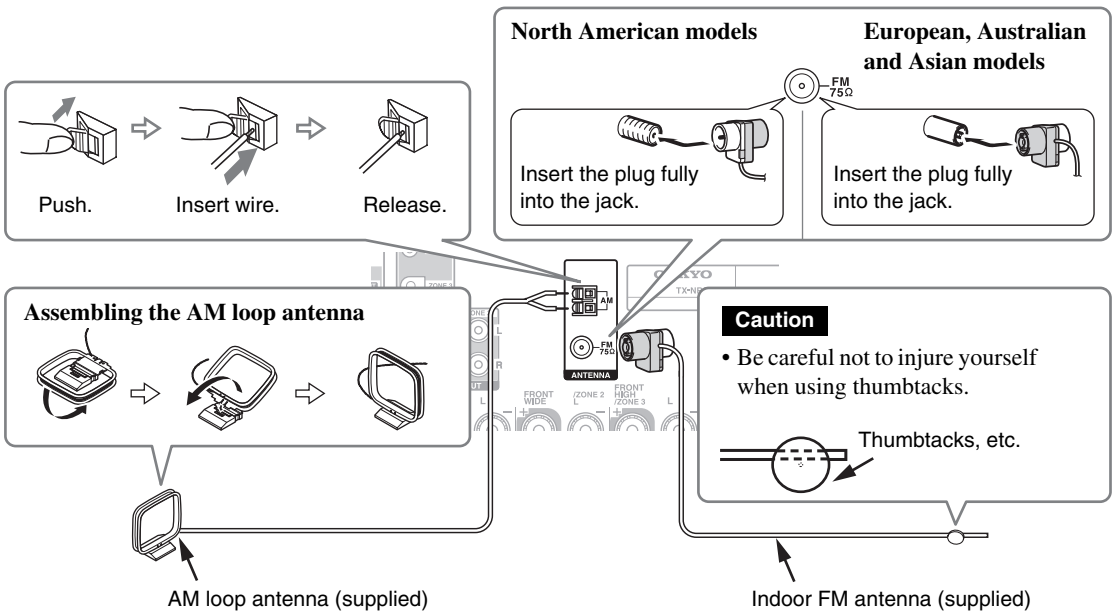

Note

- Once your AV receiver is ready for use, you'll need to tune into a radio station and position the antenna to achieve the best possible reception.
- Keep the AM loop antenna as far away as possible from your AV receiver, TV, speaker cables, and power cords.

Tip

- If you cannot achieve good reception with the supplied indoor FM antenna, try a commercially available outdoor FM antenna instead.
- If you cannot achieve good reception with the supplied indoor AM loop antenna, try using it with a commercially available outdoor AM antenna.

Connecting the Power Cord

1 Connect the supplied power cord to the AV receiver's AC INLET.

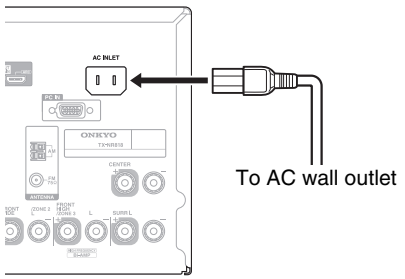

2 Plug the power cord into an AC wall outlet.

Note

- **Before connecting the power cord, connect all of your speakers and AV components.**
- Turning on the AV receiver may cause a momentary power surge that might interfere with other electrical equipment on the same circuit. If this is a problem, plug the AV receiver into a different branch circuit.
- Do not use a power cord other than the one supplied with the AV receiver. The supplied power cord is designed exclusively for use with the AV receiver and should not be used with any other equipment.
- Never disconnect the power cord from the AV receiver while the other end is still plugged into a wall outlet. Doing so may cause an electric shock. Always disconnect the power cord from the wall outlet first, and then the AV receiver.

Turning On/Off the AV Receiver

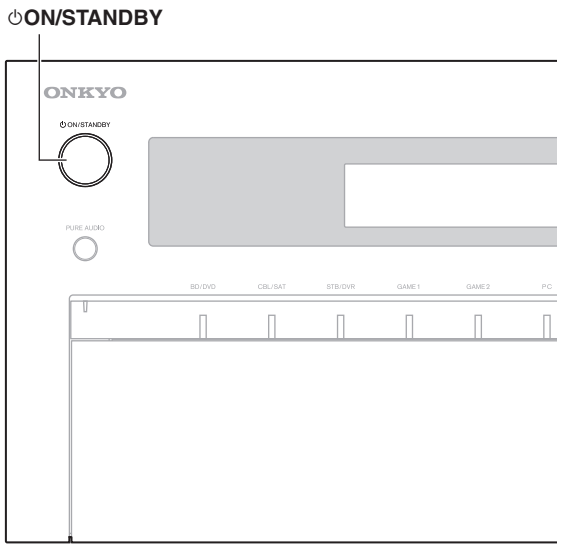



Turning On

1 **Press ⏻ON/STANDBY on the front panel.**

or

Press RECEIVER followed by ⏻RECEIVER on the remote controller.

The AV receiver comes on and its display lights.

Turning Off

1 **Press ⏻ON/STANDBY on the front panel.**

or

Press RECEIVER followed by ⏻RECEIVER on the remote controller.

The AV receiver will enter standby mode. To prevent any loud surprises when you turn on the AV receiver, always turn down the volume before you turn it off.

Tip

- The **HYBRID STANDBY** indicator may light depending on the status of settings (➔ page 56).
- For details on power management settings, see "Auto Standby" (➔ page 76).

■ Smooth Operation in a Few Easy Steps (Initial Setup)

To ensure smooth operation, here's a few easy steps to help you configure the AV receiver before you use it for the very first time. These settings only need to be made once. See "Initial Setup" for details (➔ page 24).

■ If the "Firmware Update Available" window appears.

When a new version of the firmware is available, the notification window "**Firmware Update Available**" pops up. This notification only appears when the AV receiver is connected to your home network (➔ page 107). To perform the firmware update, follow the instructions on screen.

Use ▲/▼ and **ENTER** on the AV receiver or remote controller to select one of the options.

- **Update Now**:
  Starts the firmware update.
  Refer to "Firmware Update" (➔ page 97).
- **Remind me Later**:
  The update notification will pop up again the next time you turn the AV receiver on.
- **Never Remind me**:
  Disables the automatic update notification.

Tip

- The update notification window can be enabled or disabled in "**Update Notice**" (➔ page 77).

Initial Setup

This section explains the settings that we recommend you to make before using the AV receiver for the very first time. A setup wizard is launched upon first-time use to let you perform those settings.

The on-screen menus appear only on a TV that is connected to HDMI OUT MAIN.

Selecting the Language for the Onscreen Setup Menus

This step determines the language used for the onscreen setup menus. See "**Language**" in "**OSD Setup**" (➔ page 74).

Tip

- Pressing **HOME** will close the setup wizard. To restart the initial setup, select "**Initial Setup**" in the "**Hardware Setup**" menu (➔ page 77).

After selecting the language for on-screen setup menus, a welcome screen is displayed.

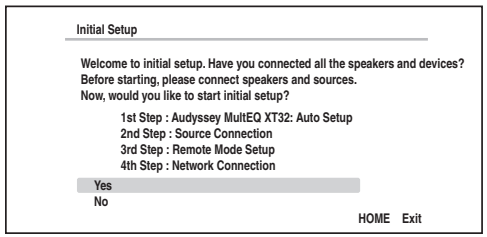

1 **Use ▲/▼ on the AV receiver or remote controller to select one of the following options, and then press ENTER.**

- **Yes**:
  Continues to "**Audyssey MultEQ XT32: Auto Setup**".
- **No**:
  Skips the settings and terminates the initial setup. The setup wizard goes to "Terminating the Initial Setup" (➔ page 25). You can always restart the initial setup by selecting "**Initial Setup**" in the "**Hardware Setup**" menu (➔ page 77).

Audyssey MultEQ XT32: Auto Setup

This step performs the automatic speaker setup.

1 **Use ▲/▼ to select one of the following options, and then press ENTER.**

- **Do it Now**:
  The automatic speaker setup is performed following instructions on screen. Refer to step 2 of "Using the Automatic Speaker Setup" (➔ page 37). When this setting is complete, the setup wizard continues to "**Source Connection**".
- **Do it Later**:
  Skips this setting.
  Press **ENTER** and continue to "**Source Connection**".

Source Connection

This step checks the connection of source components.

1 Use ▲/▼ to select one of the following options, and then press ENTER.

- **Yes, Continue**:
  Performs the checkings.
- **No, Skip**:
  Skips this step and continues to "**Remote Mode Setup**".

2 Select the input selector for which you want to check the connection and press ENTER.

The picture of the corresponding source should appear on screen with a verification prompt.

3 When prompted, use ▲/▼ to select one of the following options and then press ENTER.

- **Yes**:
  Confirms that the source is properly displayed.
- **No**:
  Displays an error report. Follow the troubleshooting instructions and recheck the source.

4 Use ▲/▼ to select one of the following options, and then press ENTER.

- **Yes**:
  Returns to step 2.
- **No, Done Checking**:
  The setup wizard continues to "**Remote Mode Setup**".

Remote Mode Setup

With this step, you can enter remote control codes for the components you want to operate.

1 Use ▲/▼ to select one of the following options, and then press ENTER.

- **Yes**:
  Performs the remote control code input. Refer to step 5 of "Looking up for Remote Control Codes" (➔ page 84).
- **No, Skip**:
  Skips this step and continues to "**Network Connection**".

2 When you're finished, select one of the following options and press ENTER.

- **Yes, Done**:
  The setup wizard continues to "**Network Connection**".
- **No, not yet**:
  You can enter other remote control codes.

Network Connection

This step checks your network connection.

1 Use ▲/▼ to select one of the following options, and then press ENTER.

- **Yes**:
  Performs the checkings.
- **No, Skip**:
  Skips this step and terminates the initial setup.

2 Follow the instructions on screen to perform the network checking.

The checking is complete when the message "**Successfully connected.**" appears at the middle of the screen. Press **ENTER** to terminate the initial setup.

Tip

- If you have selected "**Wireless (Option)**", you need to configure the optional wireless adapter. For further details, see the instruction manual provided with the wireless adapter (UWF-1).

3 If an error message appears, select one of the following options and press ENTER.

- **Retry**:
  Performs the checking again.
- **No, Do it Later**:
  Skips this step and terminates the initial setup. The setup wizard goes to "Terminating the Initial Setup".

Terminating the Initial Setup

This step ends the initial setup process.

1 Press ENTER.

To restart the initial setup, select "**Initial Setup**" in the "**Hardware Setup**" menu (➔ page 77).

Playback

The on-screen information appears only on a TV that is connected to HDMI outputs. If your TV is connected to other video outputs, use the AV receiver's display when changing settings.

This section describes the procedure for using the remote controller, unless otherwise specified.

Playing the Connected Component

■ Operating with the remote controller



1 Press RECEIVER followed by an INPUT SELECTOR button.

2 Start playback on the source component.

See also:

- "Playing an iPod/iPhone via USB" (➔ page 28)
- "Playing a USB Device" (➔ page 29)
- "Listening to vTuner Internet Radio" (➔ page 29)
- "Registering Other Internet Radio" (➔ page 30)
- "Playing Music Files on a Server (DLNA)" (➔ page 31)
- "Remote Playback" (➔ page 32)
- "Playing Music Files on a Shared Folder" (➔ page 33)
- "Listening to AM/FM Radio" (➔ page 34)
- "Playing Audio and Video from Separate Sources" (➔ page 36)
- "iPod/iPhone Playback via Onkyo Dock" (➔ page 82)
- "Controlling Other Components" (➔ page 84)

3 To adjust the volume, use VOL ▲/▼.

4 Select a listening mode and enjoy!

See also:

- "Using the Listening Modes" (➔ page 40)
- "Sound Program Edit" (➔ page 66)

■ Operating on the AV receiver

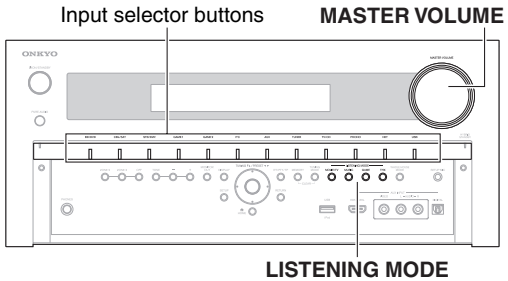

1 Use the input selector buttons to select the input source.

2 Start playback on the source component.

3 To adjust the volume, use the MASTER VOLUME control.

4 Select a listening mode and enjoy!

■ Screen Saver

If there is no video signal on the current input source and no operation for a specific time (three minutes by default), a screen saver automatically comes on.

Tip

- The time until the screen saver activates itself can be changed in the "**Screen Saver**" setting (➔ page 74).
- The screen will return to its previous state if the AV receiver is operated.

Controlling Contents of USB or Network Devices

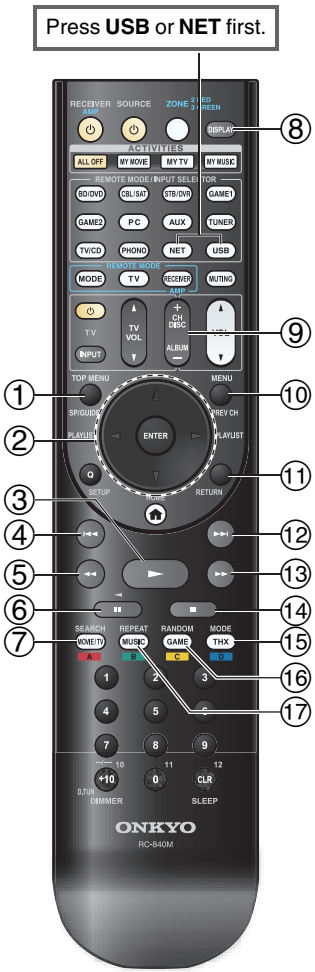

①	**TOP MENU** This button displays the top menu for each media or service.
②	**▲/▼ and ENTER** These buttons navigate through the menus.
	◄/► This button cycles through pages.
	PLAYLIST ◄/► In Standard Mode (iPod/iPhone), this button selects playlists.
③	**►** This button starts playback.
④	**I◄◄** This button selects the beginning of the current song. Pressing this button twice selects the previous song.
⑤	**◄◄** This button fast-reverses the current song.
⑥	**❚❚** This button pauses playback.
⑦	**SEARCH** You can toggle between the playback screen and the list screen during playback.
⑧	**DISPLAY** This button switches between song information during playback. Press this button while the list screen is displayed to return to the playback screen.
⑨	**ALBUM +/–** In Standard Mode (iPod/iPhone), this button selects albums.
⑩	**MENU** This button displays the menu of Internet radio services.
⑪	**RETURN** This button returns to the previous menu.
⑫	**►►I** This button selects the next song.
⑬	**►►** This button fast-forwards the current song.
⑭	**■** This button stops playback.
⑮	**MODE** You can switch between Standard Mode and Extended Mode.
⑯	**RANDOM** This button performs random playback.
⑰	**REPEAT** Press this button repeatedly to cycle through the repeat modes.

Tip

- See “Controlling Other Components” about the operation of other components (➔ page 84).

Note

- The buttons you can use will differ depending on the devices and media used for playback.

Understanding Icons on the Display

This section describes icons that appear on the AV receiver's display during media playback.

Icon	Description
	Folder
	Track
	Playback
	Pause
	Fast Forward
	Fast Reverse
	Artist
	Album
	Repeat One Track
	Repeat Folder (USB Device)
	Repeat
	Shuffle
	Shuffle Album (iPod/iPhone)

Playing an iPod/iPhone via USB

The on-screen information appears only on a TV that is connected to HDMI outputs.

This section explains how to play music/video files on the iPod/iPhone.

Compatible iPod/iPhone models

Made for:

iPod touch (1st, 2nd, 3rd and 4th generation), iPod classic, iPod nano (2nd, 3rd, 4th, 5th and 6th generation), iPhone 4S, iPhone 4, iPhone 3GS, iPhone 3G, iPhone

1 Press USB repeatedly to select the "USB(Front)" input.

Tip

- The same operation can be done by selecting "**USB**" in the Home menu.

2 Connect the USB cable that comes with the iPod/iPhone to the USB port on the front of the AV receiver.

While reading the contents of your iPod/iPhone, the message "**Connecting...**" appears on the AV receiver's display.

The **USB** indicator lights. It will flash if the AV receiver cannot read the iPod/iPhone.

Tip

- When connecting your iPod/iPhone with a USB cable, we recommend you use an official USB cable from Apple Inc.

3 Press MODE repeatedly to switch to Extended Mode (Music) or Extended Mode (Video).

A list of your iPod/iPhone model's contents appears.

Tip

- If you want to operate using the iPod/iPhone or the remote controller, press **MODE** repeatedly to switch to Standard mode.
- When you disconnect the iPod/iPhone, the AV receiver remembers the current mode. This means that if you disconnect when in Extended Mode (Music), the AV receiver will start in Extended Mode (Music) the next time you connect the iPod/iPhone.

4 Use ▲/▼ to select a folder, and then press ENTER to open it.

Tip

- You can also use the ▲/▼, enter (middle) and **TUNING MODE** buttons on the front panel. **TUNING MODE** allows you to switch modes.

5 Use ▲/▼ to select a music/video file, and press ENTER or ► to start playback.

Note

- While the message "**Connecting...**" appears on the AV receiver's display, do not disconnect the USB cable supplied with your iPod/iPhone or the USB device from the **USB** port.
- If you connect an iPod or iPhone to the **USB** port, no sound will be output from the headphones jack.

Extended Mode (Music) Control

The music content information is displayed (lists are displayed), and you can control the music content while looking at the screen.

Top screen list:

Playlists, Artists, Albums, Genres, Songs, Composers, Shuffle Songs, Now Playing.

Note

- In this mode, video contents are not displayed, even if they are input from the **AUX INPUT VIDEO** jack on the AV receiver's front panel.

Extended Mode (Video) control

The video content information is displayed (lists are displayed), and you can control the video content while looking at the screen.

Top screen list:

Movies, Music Videos, TV Shows, Video Podcasts, Rentals.

Note

- To view the video contents of your iPod/iPhone, connect it to the **USB** port and **AUX INPUT VIDEO** jack on the AV receiver's front panel, using the official Apple Composite AV Cable.
- Depending on your iPod/iPhone model and generation, the displayed items may vary and the support for Extended Mode (Video) is not guaranteed.

Standard Mode Control

The content information is not displayed, but can be operated using the iPod/iPhone or the remote controller.

Playing a USB Device

The on-screen information appears only on a TV that is connected to HDMI outputs.

This section explains how to play music files from a USB device (e.g., USB flash drives and MP3 players).

See also:

- "Network/USB Features" (➔ page 107).

1 Press USB repeatedly to select the "USB(Front)" or "USB(Rear)" input.

2 Plug your USB device into the AV receiver's USB port.

The **USB** indicator lights. It will flash if the AV receiver cannot read the USB device.

3 Press ENTER.

A list of the device's contents appears. To open a folder, use ▲/▼ to select it, and then press **ENTER**.

4 Use ▲/▼ to select a music file, and press ENTER or ► to start playback.

Note

- While the message "**Connecting...**" appears on the AV receiver's display, do not disconnect the USB cable supplied with your iPod/iPhone or the USB device from the **USB** port.

Listening to vTuner Internet Radio

You need to connect the AV receiver to your home network (➔ page 107). The on-screen information appears only on a TV that is connected to HDMI outputs.

The vTuner Internet Radio Service is a portal site featuring radio stations from all over the world.

You can search for stations by categories such as genre or location. The AV receiver is preinstalled with this service.

1 Press NET.

The network service screen appears, and the **NET** indicator lights. If it flashes, verify that the Ethernet cable is firmly connected to the AV receiver.

Tip

- The same operation can be done by selecting "**Network Service**" in the Home menu.

2 Use ▲/▼/◄/► to select "vTuner Internet Radio" and then press ENTER.

3 Use ▲/▼ to select a program and then press ENTER.

Playback starts.

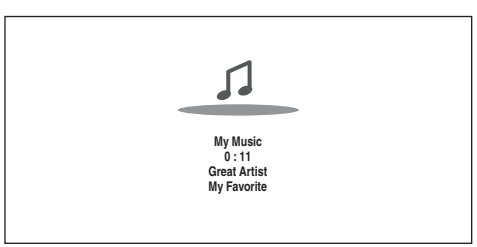

Tip

- You can find stations similar to the one being played. During playback, press **MENU** on the remote controller, select "**Stations like this**" and press **ENTER**.

■ Adding vTuner Internet Radio Stations to Favorites

There are two ways you can register specific Internet radio stations (programs) from the vTuner Internet Radio.

Adding to My Favorites

The selected program will be added to "**My Favorites**" on the network service screen, which appears when pressing **NET** on the remote controller.

1. Press **MENU** with the station selected or while a station is playing.
2. Use ▲/▼ to select "**Add to My Favorites**", and press **ENTER**.
3. Use ▲/▼/◄/► to select "**OK**", and press **ENTER**.

Tip

- You can rename the stations saved in "**My Favorites**".

Adding to vTuner Internet Radio's Favorites

Select "**vTuner Internet Radio**" and press **ENTER** to display the "**Favorites**" folder that appears on the same screen as "**Stations By Genre**", "**Stations By Location**", etc. This is where your favorite Internet radio bookmarks will be stored.

To register your favorite stations using a personal computer, you need to connect your PC to the same network as the AV receiver. Enter the ID# (MAC address) of your unit on http://onkyo.vtuner.com/. You can then register your favorite radio programs. The ID# is shown at the bottom of the "**vTuner Internet Radio**" top menu, and the AV receiver's MAC address is shown on "**Network**" of the Setup menu (➔ page 76).

Registering Other Internet Radio

You need to connect the AV receiver to your home network (➔ page 107). The on-screen information appears only on a TV that is connected to HDMI outputs.

Internet radio URLs in the following formats are supported: PLS, M3U, and podcast (RSS). However, depending on the type of data or audio format used by the Internet radio station, you may not be able to listen to some stations.

To listen to other Internet radio stations, you must register your station in "**My Favorites**" of the network service screen, as described below.

Note

- Services available may vary depending on the region. See the separate instructions for more information.

1 Select "Network" on the Setup menu to verify your IP address (➔ page 77).

Take a note of the IP address.

2 On your computer, start your web browser.

3 Enter the AV receiver's IP address in the browser's Internet address (URL) field.

If you are using Internet Explorer®, you can also enter the URL by selecting "Open..." on the "File" menu.

Information on the AV receiver is then shown on your Internet browser (Web Setup).

4 Click on the "My Favorites" tab, and enter the Internet radio station's name and URL.

5 Click "Save" to save the Internet radio station.

The Internet radio station is then added to "**My Favorites**". To play the registered station, press **NET**, and then select "**My Favorites**" on the network service screen. A list of registered Internet radio stations appears. Select the one that you saved and press **ENTER**.

Tip

- If you want to add a new station directly from "**My Favorites**", select an empty slot in the list and press **MENU**. Then, select "**Create New Station**" and press **ENTER**.
  Pressing **ENTER** again will display the keyboard screen. Use that keyboard to enter the station's name and URL respectively, and then press **ENTER**.
- If you want to delete a station saved in "**My Favorites**", press **MENU** with the station selected or while the station is playing. Then, use ▲/▼ to select "**Delete from My Favorites**" and press **ENTER**. You can also delete stations from the Web Setup.
- If you want to rename a station, select the desired station and press **MENU**. Then, use ▲/▼ to select "**Rename this station**" and press **ENTER**.
- You can save up to 40 Internet radio stations.

Changing the Icon Layout on the Network Service Screen

You need to connect your TV to the HDMI output (HDMI OUT MAIN) to make the following on-screen setting.

The layout of icons can be customized by switching their positions on the network service screen.

1 Press NET.
The network service screen appears, and the **NET** indicator lights. If it flashes, verify that the Ethernet cable is firmly connected to the AV receiver.

Tip

- The same operation can be done by selecting "**Network Service**" in the Home menu.

2 Press MODE/D (blue) on the remote controller.

3 Use ▲/▼/◄/► to select an icon to move, and then press ENTER.

4 Use ▲/▼/◄/► to select another icon as the destination, and then press ENTER.
The icons switch positions and the message "**Completed!**" appears.

Playing Music Files on a Server (DLNA)

You need to connect the AV receiver to your home network (→ page 107). The on-screen information appears only on a TV that is connected to HDMI outputs.

This section explains how to play music files on a computer or media server through the AV receiver (Server Playback).

1 Start your computer or media server.

2 Press NET.
The network service screen appears. The **NET** indicator lights. If it flashes, confirm the network connection.

Tip

- The same operation can be done by selecting "**Network Service**" in the Home menu.

3 Use ▲/▼/◄/► to select "DLNA", and press ENTER.

4 Use ▲/▼ to select a server, and then press ENTER.
The menu is displayed according to the server functions.

Note

- The search function does not work with media servers which do not support this function.
- Photos and movies stored on a media server cannot be accessed from the AV receiver.
- Depending on the sharing settings in the media server, the AV receiver may not able to access the content. See the instruction manual of the media server.

5 Use ▲/▼ to select an item, and then press ENTER or ► to start playback.

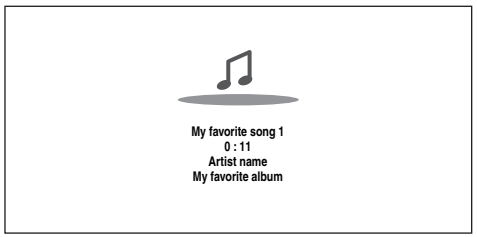

Note

- Depending on the media server, ◄◄/►►/❚❚ may not work.
- If the message "**No Item.**" appears, this means that no information can be retrieved from the server. In this case, check your server, network, and AV receiver connections.

Windows Media Player 11 Setup

This section explains how to configure Windows Media Player 11 so that the AV receiver can play the music files stored on your computer.

1 Start Windows Media Player 11.

2 On the "Library" menu, select "Media Sharing".
The "Media Sharing" dialog box appears.

3 Select the "Share my media" check box, and then click "OK".
A list of the supported devices appears.

4 Select the AV receiver in the list, and then click "Allow".
The corresponding icon will be checked.

↳ To be continued

5 Click "OK" to close the dialog box.
This completes the Windows Media Player 11 configuration.
You can now play the music files in your Windows Media Player 11 library through the AV receiver.

Tip

- Windows Media Player 11 can be downloaded for free from the Microsoft web site.

Remote Playback

You need to connect the AV receiver to your home network (➔ page 107). The on-screen information appears only on a TV that is connected to HDMI outputs.

Remote Playback means you can play the music files stored on a media server or personal computer with the AV receiver by operating the controller device in the home network.

Windows Media Player 12 Setup

This section explains how to configure Windows Media Player 12 so that the AV receiver can play the music files stored on your personal computer.

1 Start Windows Media Player 12.

2 On the "Stream" menu, select "Turn on media streaming".
A dialog box appears.

Tip

- If the media streaming is already activated, clicking on "More streaming options..." in the "Stream" menu will display a list of the playback devices connected to the network. You can skip step 3.

3 Move your cursor and click on "Turn on media streaming".
A list of media server appears. Wording may vary slightly depending on the network location.

4 On the "Media streaming options", select the AV receiver and confirm that it is set to "Allow".

5 Click "OK" to close the dialog box.
This completes the Windows Media Player 12 configuration.
You can now play the music files in your Windows Media Player 12 library.

Tip

- On the "Stream" menu, confirm that "Allow remote control of my Player..." is checked.

Using Remote Playback

1 Turn on the AV receiver.

2 Start Windows Media Player 12.
To enable remote playback, you must first configure Windows Media Player 12.

3 On Windows Media Player 12, right-click on a music file.
The right-click menu appears.

Tip

- For selecting another media server, select the desired media server from the "Other Libraries" menu on Windows Media Player 12.

4 Select the AV receiver in "Remote playback".
The "Play to" window appears and playback on the AV receiver starts. Operations during remote playback can be made from the "Play to" window of Windows 7 on your personal computer.
A playback screen will be displayed on the connected TV.

5 Adjusting the Volume.
You can adjust the volume by adjusting the volume bar in the "Remote playback" window. The default maximum volume level is 82 (0dB). If you wish to change this, enter the value from the Web Setup in your browser. Refer to step 3 of "Registering Other Internet Radio" for details (➔ page 30).
The volume value of the remote window and the volume value of the AV receiver may not always match.
Adjustments you make to the volume in the AV receiver will not be reflected in the "Remote playback" window.

Note

- Remote playback cannot be used in any of the following cases:
  – Network services are being used.
  – Contents are being played from a USB device or iPod/iPhone.
  – Zones are turned on.

Playing Music Files on a Shared Folder

This section explains how to play music files on a computer or NAS (Network Attached Storage) through the AV receiver.

Windows 7 Setup

■ Setting the sharing options

1 Select "Choose homegroup and sharing options" on the Control Panel.

Tip

- If this option is not available, verify that "View by:" is set to "Category".

2 Select "Change advanced sharing settings".

3 Under "Home or Work", verify that the following items are checked:

"Turn on network discovery", "Turn on file and printer sharing", "Turn on sharing so anyone with network access can read and write files in the Public folders", and "Turn off password protected sharing".

4 Select "Save changes" and click "OK" on the confirmation screen.

■ Creating a shared folder

1 Right-click the folder that you want to share.

2 Select "Properties".

3 On the "Sharing" tab, select "Advanced Sharing".

4 Check the check box of "Share this folder" and then click "OK".

5 Under "Network File and Folder Sharing", select "Share".

6 Select and add "Everyone" from the pull-down menu and then click "Share".

Tip

- With this setting, everyone is allowed to access the folder. If you want to assign a user name and password to the folder, make the corresponding settings for "Permissions" in "Advanced Sharing" of the "Sharing" tab.
- Verify that "Workgroup" is properly set.

Note

- When using NAS (Network Attached Storage), refer to the instruction manual provided with your NAS unit.

Playing music files on a shared folder

In order to enjoy Home Media, you must first create a shared folder on your computer.

1 On the remote controller, press RECEIVER followed by NET.

The network service screen appears. The **NET** indicator lights. If it flashes, confirm the network connection.

Tip

- The same operation can be done by selecting "**Network Service**" in the Home menu.

2 Use ▲/▼/◄/► to select "Home Media", and press ENTER.

3 Use ▲/▼ to select a server, and then press ENTER.

Tip

- The server name of your computer can be viewed on the computer properties screen.

4 Use ▲/▼ to select the desired shared folder and then press ENTER.

5 When asked for a user name and password, enter the necessary login information.

Tip

- The login information will be remembered for the next time you log in.
- The login information is that of the user account set when creating a shared folder.

6 Use ▲/▼ to select a music file and then press ENTER or ►.

The playback of the selected file starts.

Listening to AM/FM Radio

This section describes the procedure of using the buttons on the front panel, unless otherwise specified.

Using the Tuner

With the built-in tuner you can enjoy AM and FM radio stations. You can store your favorite stations as presets for quick selection.
You can also change the frequency steps (➔ page 74).

1 Press TUNER to select either "AM" or "FM".
In this example, FM has been selected.
Each time you press **TUNER**, the radio band changes between AM and FM.

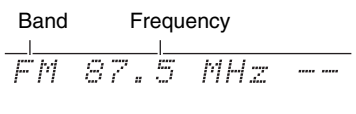

(Actual display depends on the country.)

Tuning into Radio Stations

■ Auto tuning mode

1 Press TUNING MODE so that the AUTO indicator lights on the AV receiver's display.

2 Press TUNING ▲/▼.
Searching stops when a station is found.

When tuned into a station, the **TUNED** indicator lights. When tuned into a stereo FM station, the **FM STEREO** indicator lights as shown.



Tip

- **Tuning into weak FM stereo stations**
  If the signal from a stereo FM station is weak, it may be impossible to get good reception. In this case, switch to manual tuning mode and listen to the station in mono.

■ Manual tuning mode

In manual tuning mode, FM stations will be in mono.

1 Press TUNING MODE so that the AUTO indicator goes off on the AV receiver's display.

2 Press and hold TUNING ▲/▼.
The frequency stops changing when you release the button.
Press the buttons repeatedly to change the frequency one step at a time.

■ Tuning into stations by frequency

You can tune into AM and FM stations directly by entering the appropriate frequency.

1 On the remote controller, press TUNER repeatedly to select "AM" or "FM", followed by D.TUN.

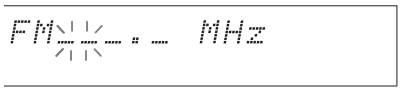

(Actual display depends on the country.)

2 Within 8 seconds, use the number buttons to enter the frequency of the radio station.
For example, to tune to 87.5 (FM), press **8**, **7**, **5** or **8**, **7**, **5**, **0**.
If you have entered the wrong number, you can retry after 8 seconds.

Presetting AM/FM Stations

You can store a combination of up to 40 of your favorite AM/FM radio stations as presets.

1 Tune into the AM/FM station that you want to store as a preset.
See the previous section.

2 Press MEMORY.
The preset number flashes.

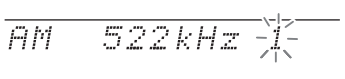

(Actual display depends on the country.)

3 While the preset number is flashing (about 8 seconds), use PRESET ◄/► to select a preset from 1 through 40.

↳ To be continued

4 Press MEMORY again to store the station or channel.

The station or channel is stored and the preset number stops flashing.

Repeat this procedure for all of your favorite AM/FM radio stations.

■ Selecting Presets

1 To select a preset, use PRESET ◄/► on the AV receiver, or the remote controller's CH +/–.

Tip

- You can also use the remote controller's number buttons to select a preset directly.

■ Deleting Presets

1 Select the preset that you want to delete.

See the previous section.

2 While holding down MEMORY, press TUNING MODE.

The preset is deleted and its number disappears from the AV receiver's display.

Using RDS (excluding North American models)

RDS works only in areas where RDS broadcasts are available.

When tuned into an RDS station, the **RDS** indicator lights. When the station is broadcasting text information, the text can be displayed.

■ What is RDS?

RDS stands for Radio Data System and is a method of transmitting data in FM radio signals. It was developed by the European Broadcasting Union (EBU) and is available in most European countries. Many FM stations use it these days. In addition to displaying text information, RDS can also help you find radio stations by type (e.g., news, sport, rock, etc.).

The AV receiver supports four types of RDS information:

PS (Program Service)

When tuned to an RDS station that's broadcasting PS information, the station's name will be displayed. Pressing **DISPLAY** will display the frequency for 3 seconds.

RT (Radio Text)

When tuned to an RDS station that's broadcasting text information, the text will be shown on the AV receiver's display as described in the next section.

PTY (Program Type)

This allows you to search for RDS radio stations by type.

TP (Traffic Program)

This allows you to search for RDS radio stations that broadcast traffic information (➔ page 36).

Note

- In some cases, the text characters displayed on the AV receiver may not be identical to those broadcast by the radio station. Also, unexpected characters may be displayed when unsupported characters are received. This is not a malfunction.
- If the signal from an RDS station is weak, RDS data may be displayed intermittently or not at all.

■ Displaying Radio Text (RT)

1 Press RT/PTY/TP once.

The RT information scrolls across the AV receiver's display.

Note

- The message "**Waiting**" may appear while the AV receiver waits for the RT information.
- If the message "**No Text Data**" appears, no RT information is available.

■ Finding Stations by Type (PTY)

You can search for radio stations by type.

1 Press RT/PTY/TP twice.

The current program type appears on the AV receiver's display.

2 Use PRESET ◄/► to select the type of program you want.

See the table shown later in this chapter.

3 To start the search, press the enter button.

The AV receiver searches until it finds a station of the type you specified, at which point it stops briefly before continuing with the search.

4 When a station you want to listen to is found, press the enter button.

If no stations are found, the message "**Not Found**" appears.

■ Listening to Traffic News (TP)

You can search for stations that broadcast traffic news.

1 **Press RT/PTY/TP three times.**

If the current radio station is broadcasting TP (Traffic Program), "**[TP]**" will appear on the AV receiver's display. If "**TP**" without square brackets appears, this means that the station is not broadcasting TP.

2 **To locate a station that is broadcasting TP, press the enter button.**

The AV receiver searches until it finds a station that's broadcasting TP.

If no stations are found, the message "**Not Found**" appears.

RDS program types (PTY)

Type	Display
None	None
News reports	News
Current affairs	Affairs
Information	Info
Sport	Sport
Education	Educate
Drama	Drama
Culture	Culture
Science and technology	Science
Varied	Varied
Pop music	Pop M
Rock music	Rock M
Middle of the road music	Easy M
Light classics	Light M
Serious classics	Classics
Other music	Other M
Weather	Weather
Finance	Finance
Children's programmes	Children
Social affairs	Social
Religion	Religion
Phone in	Phone In
Travel	Travel
Leisure	Leisure
Jazz music	Jazz
Country music	Country
National music	Nation M
Oldies music	Oldies
Folk music	Folk M
Documentary	Document
Alarm test	TEST
Alarm	Alarm!

Playing Audio and Video from Separate Sources

You can listen to the audio of one input source while watching the video of another. This function takes advantage of the fact that when an audio-only input source (**PC**, **TV/CD**, **PHONO**) is selected, the video input source remains unchanged. The following procedure shows how to listen to a CD player's audio source connected to **TV/CD IN** while watching a Blu-ray Disc/DVD player's video source connected to **BD/DVD**.

1 **Press BD/DVD.**

2 **Press TV/CD.**

The audio output changes to the CD source, but the video of previously-selected **BD/DVD** is retained.

3 **Start playback on your Blu-Ray Disc/DVD and CD players.**

You can now enjoy watching your Blu-ray Disc/DVD with the sound of your CD player.

Using Basic Functions

Using the Automatic Speaker Setup

With the supplied calibrated microphone, Audyssey MultEQ® XT32 automatically determines the number of speakers connected, their size for purposes of bass management, optimum crossover frequencies to the subwoofer (if present), and distances from the primary listening position.

Audyssey MultEQ XT32 then removes the distortion caused by room acoustics by capturing room acoustical problems over the listening area in both the frequency and time domain. The result is clear, well-balanced sound for everyone. Audyssey MultEQ XT32 can be used with Audyssey Dynamic EQ® and Audyssey Dynamic Volume® (➔ pages 67, 68).

Before using this function, connect and position all of your speakers.

Audyssey MultEQ XT32 offers two ways of measuring: the "**Audyssey Quick Start**" and "**Audyssey MultEQ XT32 Full Calibration**".

- "**Audyssey Quick Start**" uses the measurement from one position to perform the speaker setting only.
- "**Audyssey MultEQ XT32 Full Calibration**" uses the measurement from eight positions to correct room response in addition to the speaker setting.

The more positions are used in measuring, the better the listening environment will become. We recommend using a measurement from eight positions to create the best listening environment.

The Quick Start takes 2 minutes and Full Calibration takes about 20 minutes.

Total measurement time varies depending on the number of speakers.

Measurement procedure

To create a listening environment in your home theater that all listeners will enjoy, Audyssey MultEQ XT32 takes measurements at up to eight positions within the listening area. Position the microphone at ear height of a seated listener with the microphone tip pointed directly at the ceiling using a tripod. Do not hold the microphone in your hand during measurements as this will produce inaccurate results.

■ First measurement position

Also referred to as the Main Listening Position, this refers to the most central position where one would normally sit within the listening environment. Audyssey MultEQ XT32 uses the measurements from this position to calculate speaker distance, level, polarity, and the optimum crossover value for the subwoofer.

■ Second-eighth measurement positions

These are the other listening positions (i.e., the places where the other listeners will sit). You can measure up to eight positions.

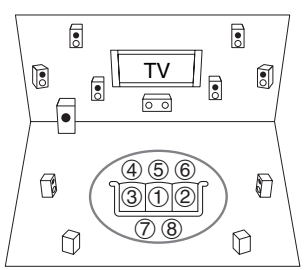

◯: Listening area ① to ⑧: Listening position

Note

- Make the room as quiet as possible. Background noise and Radio Frequency Interference (RFI) can disrupt the room measurements. Close windows, televisions, radios, air conditioners, fluorescent lights, home appliances, light dimmers, or other devices. Turn off the cell phone (even if it is not in use) or place it away from all audio electronics.
- The microphone picks up test tones played through each speaker as Audyssey MultEQ XT32 Room Correction and Speaker Setup runs.
- Audyssey MultEQ XT32 Room Correction and Speaker Setup cannot be performed while a pair of headphones is connected.

1 Turn on the AV receiver and the connected TV.

On the TV, select the input to which the AV receiver is connected.

2 Set the speaker setup microphone at the Main Listening Position ①, and connect it to the SETUP MIC jack.

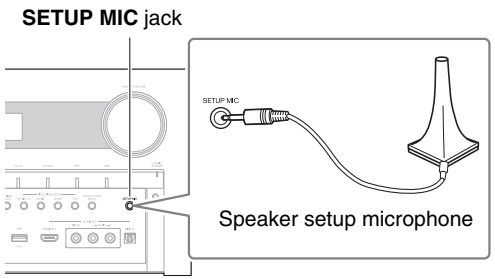

The speaker setting menu appears.

Note

- The on-screen menus appear only on a TV that is connected to **HDMI OUT MAIN**. If your TV is connected to other video outputs, use the AV receiver's display when changing settings.

3 When you've finished making the settings, press ENTER.

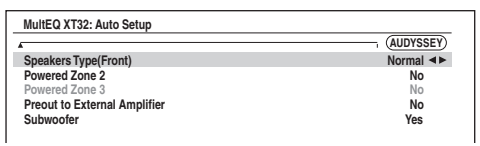

Perform the "Speaker Setup" according to your speaker configuration:

– **Speakers Type (Front)** (➔ page 59)
– **Powered Zone 2** (➔ page 59)
– **Powered Zone 3** (➔ page 59)
– **Preout to External Amplifier** (➔ page 59)
– **Subwoofer** (➔ page 60)

If you use a powered subwoofer(s), go to step 4. If not, go to step 5.

If "**Speakers Type (Front)**" is set to "**Digital Crossover**", a confirmation screen appears. Select "**Next (2-7. Digital Processing Crossover Network)**" to display the screen for Digital Processing Crossover Network (➔ page 63). Continue with the settings.

4 Adjust the subwoofer volume level to 75 dB, and then press ENTER.

Test tones are played through the subwoofer. Use the volume control on the subwoofer.

Note

- If your subwoofer does not have a volume control, disregard the displayed level and press **ENTER** to proceed to the next step.
- If you set the subwoofer's volume control to its maximum and the level displayed is lower than 75 dB, leave the subwoofer's volume control at its maximum and press **ENTER** to proceed to the next step.

5 Use ▲/▼ to select "Audyssey Quick Start" or "Audyssey MultEQ XT32 Full Calibration", and then press ENTER.

6 Press ENTER.

Audyssey MultEQ® XT32 Room Correction and Speaker Setup starts.

Test tones are played through each speaker as Audyssey MultEQ XT32 Room Correction and Speaker Setup runs. This process takes a few minutes. Please **refrain from talking** during measurements and **do not stand** between speakers and the microphone.

Do not disconnect the speaker setup microphone during Audyssey MultEQ XT32 Room Correction and Speaker Setup, unless you want to cancel the setup.

If you select "**Audyssey Quick Start**", you will go to step 9.

7 Place the speaker setup microphone at the next position, and then press ENTER.

Audyssey MultEQ XT32 performs more measurements. This takes a few minutes.

8 When prompted, repeat step 7.

9 Use ▲/▼ to select an option, and then press ENTER.

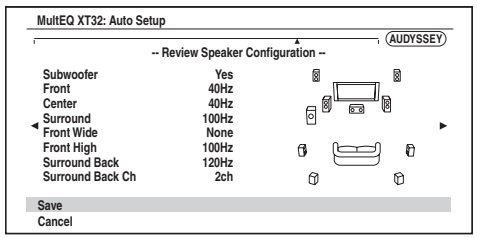

The options are:

- **Save**:
  Save the calculated settings and exit Audyssey MultEQ XT32 Room Correction and Speaker Setup.
- **Cancel**:
  Cancel Audyssey MultEQ XT32 Room Correction and Speaker Setup.

Tip

- You can view the calculated settings for the speaker configuration, speaker distances, and speaker levels by using ◄/►.

To be continued

10 Use ▲/▼ to select a target, and use ◄/► to change the setting.

After the results of Audyssey MultEQ® XT32 have been saved, the menu will display the "Audyssey" (➔ page 67), "Dynamic EQ" (➔ page 67), "Dynamic Volume" (➔ page 68) settings.

Note

- When "**Audyssey Quick Start**" has been used for measurement, "**Audyssey**" cannot be selected.
- These settings are applied to all input selectors.

11 Press ENTER.

12 Disconnect the speaker setup microphone.

Note

- You can cancel Audyssey MultEQ XT32 Room Correction and Speaker Setup at any point in this procedure simply by disconnecting the setup microphone.
- Do not connect or disconnect any speakers during Audyssey MultEQ XT32 Room Correction and Speaker Setup.
- If the AV receiver is muted, it will be unmuted automatically when Audyssey MultEQ XT32 Room Correction and Speaker Setup starts.
- Changes to the room after Audyssey MultEQ XT32 Room Correction and Speaker Setup requires you run Audyssey MultEQ XT32 Room Correction and Speaker Setup again, as room EQ characteristics may have changed.

Error Messages

While Audyssey MultEQ XT32 Room Correction and Speaker Setup is in progress, one of the error messages below may appear.

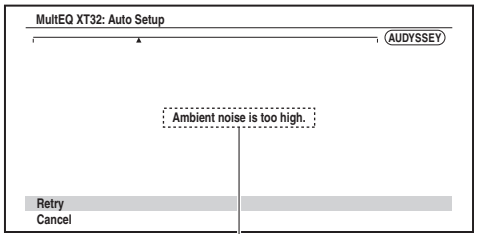

The options are:

- **Retry**:
  Try again.
- **Cancel**:
  Cancel Audyssey MultEQ XT32 Room Correction and Speaker Setup.

- **Ambient noise is too high.**
  The background noise is too loud. Remove the source of the noise and try again.
- **Speaker Matching Error!**
  The number of speakers detected was different from that of the first measurement. Check the speaker connection.
- **Writing Error!**
  This message appears if saving fails. Try saving again. If this message appears after 2 or 3 attempts, contact your Onkyo dealer.
- **Speaker Detect Error**
  This message appears if a speaker is not detected. "**No**" means that no speaker was detected.

Tip

- See "Speaker Configuration" for appropriate settings (➔ page 13).

Changing the Speaker Setup Manually

You can manually make changes to the settings found during Audyssey MultEQ XT32 Room Correction and Speaker Setup.

See also:

- "Speaker Configuration" (➔ page 60)
- "Speaker Distance" (➔ page 61)
- "Level Calibration" (➔ page 61)
- "Equalizer Settings" (➔ page 62)

Note

- Please note that THX recommends any THX main speakers be set to "**80Hz(THX)**". If you set up your speakers using Audyssey MultEQ XT32 Room Correction and Speaker Setup, please make sure manually that any THX speakers are set to "**80Hz(THX)**" crossover (➔ page 60).
- Sometimes due to the electrical complexities of subwoofers and the interaction with the room, THX recommends setting the level and the distance of the subwoofer manually.
- Sometimes due to interaction with the room, you may notice irregular results when setting the level and/or distance of the main speakers. If this happens, THX recommends setting them manually.

Using a Powered Subwoofer

If you're using a powered subwoofer and it outputs very low-frequency sound at a low volume level, it may not be detected by Audyssey MultEQ XT32 Room Correction and Speaker Setup.

If the "**Subwoofer**" appears on the "**Review Speaker Configuration**" screen as "**No**", increase the subwoofer's volume to the half-way point, set it to its highest crossover frequency, and then try running Audyssey MultEQ XT32 Room Correction and Speaker Setup again. Note that if the volume is set too high and the sound distorts, detection issues may occur, so use an appropriate volume level. If the subwoofer has a low-pass filter switch, set it to Off or Direct. Refer to your subwoofer's instruction manual for details.

Using the Listening Modes

Selecting Listening Modes

See "About Listening Modes" for detailed information about the listening modes.

■ Listening Mode Buttons



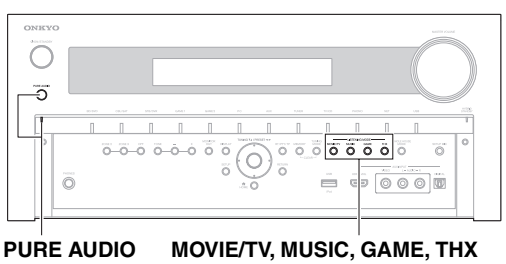

MOVIE/TV button

This button selects the listening modes intended for use with movies and TV.

MUSIC button

This button selects the listening modes intended for use with music.

GAME button

This button selects the listening modes intended for use with video games.

THX button

This button selects the THX listening modes.

PURE AUDIO button and indicator

This button selects the Pure Audio listening mode.

When this mode is selected, the AV receiver's display and analog video circuitry are turned off. Only video signals input through HDMI input can be output from the HDMI output. The indicator lights when this mode is selected. Pressing this button again will select the previous listening mode.

- **The Dolby Digital and DTS listening modes can only be selected if your Blu-ray Disc/DVD player is connected to the AV receiver with a digital audio connection (coaxial, optical, or HDMI).**
- **The listening modes you can select depends on the format of the input signal. To check the format, see "Displaying Source Information" (➔ page 48).**
- **While a pair of headphones is connected, you can select the following listening modes: Pure Audio, Mono, Direct, and Stereo.**

About Listening Modes

The AV receiver's listening modes can transform your listening room into a movie theater or concert hall, with high fidelity and stunning surround sound.

■ Explanatory Notes

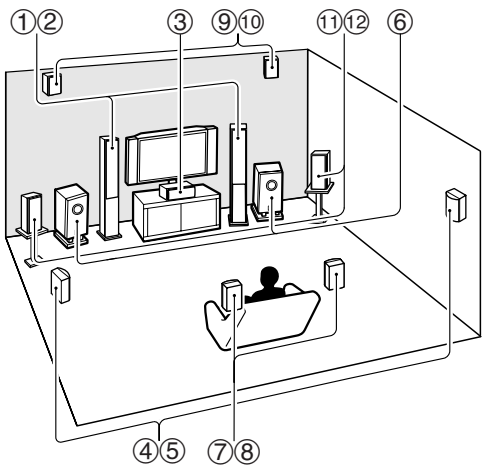

① ② Front speakers
③ Center speaker
④ ⑤ Surround speakers
⑥ Subwoofer(s)
⑦ ⑧ Surround back speakers
⑨ ⑩ Front high speakers
⑪ ⑫ Front wide speakers

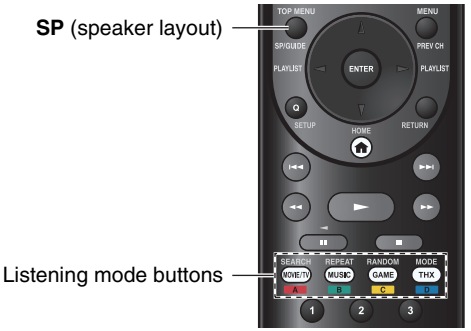

Input Source

The following audio formats are supported by the listening modes.

MONO	This is mono (monophonic) sound.
STEREO	This is stereo (stereophonic) sound. Two independent audio signal channels are reproduced through two speakers.
5.1ch	This is 5.1-channel surround sound. This surround system has five main channels of sound and a sixth subwoofer channel (called the point-one channel).
7.1ch	This is 7.1-channel surround sound. This is a further sound enhancement to 5.1-channel sound with two additional speakers that provide greater sound envelopment and more accurate positioning of sounds.
DTS-ES	This is DTS-ES surround sound. This surround system can produce a discrete or a matrix-encoded sixth channel from existing DTS 5.1 encoded material.
DD EX	This is Dolby Digital EX surround sound. This provides a center back surround channel from 5.1-channel sources.

Speaker Layout

The illustration shows which speakers are activated in each channel. See “Speaker Configuration” for the speaker setup (➔ page 60).

2.1		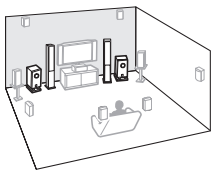
3.1		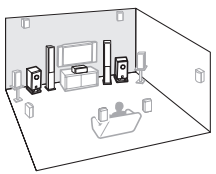
5.1		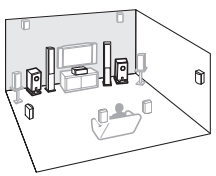
7.1 *1	7.1-FH	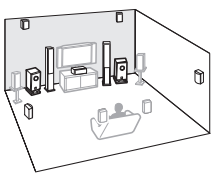
	7.1-FW	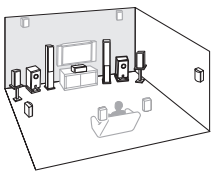
	7.1-SB	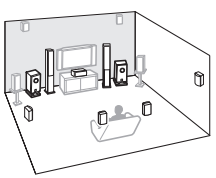
9.1 *2	9.1-SB/FH	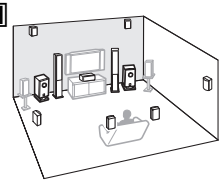
	9.1-SB/FW	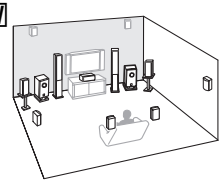
	9.1-FH/FW	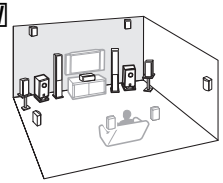

*1 Press **RECEIVER** followed by **SP** (speaker layout) repeatedly to select the speakers you want to use: front high, front wide, or surround back.

*2 After enabling the corresponding speakers, press **RECEIVER** followed by **SP** (speaker layout) repeatedly to select the layout you want to use. These layouts are only available when “**Preout to External Amplifier**” (➔ page 59) is enabled.

Onkyo-Original DSP Listening Modes

Listening Mode	Description	Input Source	Speaker Layout
Orchestra *Orchestra*	Suitable for classical or operatic music, this mode emphasizes the surround channels in order to widen the stereo image, and simulates the natural reverberation of a large hall.	MONO STEREO 5.1ch 7.1ch DTS-ES DD EX	5.1 7.1 9.1
Unplugged *Unplugged*	Suitable for acoustic instruments, vocals and jazz, this mode emphasizes the front stereo image, giving the impression of being right in front of the stage.		
Studio-Mix *Studio-Mix*	Suitable for rock or pop music, listening to music in this mode creates a lively sound field with a powerful acoustic image, like being at a club or rock concert.		
TV Logic *TV Logic*	This mode adds realistic acoustics to TV shows produced in a TV studio, surround effects to the entire sound, and clarity to voices.		
Game-RPG *Game-RPG*	In this mode, the sound has a dramatic feel with a similar atmosphere to Orchestra mode.		
Game-Action *Game-Action*	In this mode, sound localization is distinct with emphasis on bass.		
Game-Rock *Game-Rock*	In this mode, sound pressure is emphasized to heighten live feel.		
Game-Sports *Game-Sports*	In this mode, reverberation is increased and sound localization decreased slightly.		
All Ch Stereo *All Ch Stereo*	Ideal for background music, this mode fills the entire listening area with stereo sound from the front, surround, and surround back speakers.	MONO STEREO 5.1ch 7.1ch DTS-ES DD EX	3.1 5.1 7.1 9.1
Full Mono *Full Mono*	In this mode, all speakers output the same sound in mono, so the sound you hear is the same regardless of where you are within the listening room.		
T-D (Theater-Dimensional) *T-D*	With this mode you can enjoy a virtual surround sound even with only two or three speakers. This works by controlling how sounds reach the listener's left and right ears. Good results may not be possible if there's too much reverb, so we recommend that you use this mode in an environment with little or no natural reverb.		2.1 3.1 5.1 7.1 9.1

Listening Modes

Listening Mode	Description	Input Source	Speaker Layout
Pure Audio[*1] *Pure Audio*	In this mode, the display and video circuitry are turned off, minimizing possible noise sources for the ultimate in high-fidelity audio reproduction. (As the analog video circuitry is turned off, only video signals input through HDMI IN can be output from the HDMI output.)	MONO STEREO 5.1ch 7.1ch DTS-ES DD EX	2.1 3.1 5.1 7.1[*2] 9.1
Direct *Direct*	In this mode, audio from the input source is output without surround-sound processing. The speaker configuration (presence of speakers) and speaker distance settings are enabled, but much of the processing set via the audio setup is disabled. See "On-screen Setup" for more details (➔ page 51).		
Stereo *Stereo*	Sound is output from the front left and right speakers and subwoofer.		2.1 3.1 5.1 7.1 9.1
Mono *Mono*	Use this mode when watching an old movie with a mono soundtrack, or use it with the foreign language soundtracks recorded in the left and right channels of some movies. It can also be used with DVDs or other sources containing multiplexed audio, such as karaoke DVDs.		
Multichannel *Multich*	This mode is for use with PCM multichannel sources.	5.1ch 7.1ch	3.1 5.1 7.1 9.1
DSD[*3] *DSD*	In this mode, audio from the input source is output without surround-sound processing. The speaker configuration (presence of speakers), crossover frequency, speaker distance, A/V Sync and much of the processing set via the audio setup are enabled. See "On-screen Setup" for more details (➔ page 51).	5.1ch	3.1 5.1 7.1 9.1
Dolby Digital *Dolby D*			
Dolby Digital Plus[*4] *Dolby D +*		5.1ch	3.1 5.1 7.1 9.1
		7.1ch	3.1 5.1 7.1[*2] 9.1
Dolby TrueHD *Dolby TrueHD*		5.1ch	3.1 5.1 7.1 9.1
		7.1ch	3.1 5.1 7.1[*2] 9.1

Listening Mode	Description	Input Source	Speaker Layout
DTS *DTS*	In this mode, audio from the input source is output without surround-sound processing. The speaker configuration (presence of speakers), crossover frequency, speaker distance, A/V Sync and much of the processing set via the audio setup are enabled. See "On-screen Setup" for more details (➔ page 51).	5.1ch	3.1 5.1 7.1 9.1
DTS-HD High Resolution Audio *DTS-HD HR*		5.1ch	3.1 5.1 7.1 9.1
		7.1ch	3.1 5.1 7.1[*2] 9.1
DTS-HD Master Audio *DTS-HD MSTR*		5.1ch	3.1 5.1 7.1 9.1
		7.1ch	3.1 5.1 7.1[*2] 9.1
DTS Express *DTS Express*		5.1ch	3.1 5.1 7.1 9.1
DTS 96/24[*5] *DTS 96/24*	This mode is for use with DTS 96/24 sources. This is high-resolution DTS with a 96 kHz sampling rate and 24-bit resolution, providing superior fidelity. Use it with DVDs that bear the DTS 96/24 logo.	5.1ch	3.1 5.1 7.1 9.1
DTS-ES Discrete[*6] *ES Discrete*	This mode is for use with DTS-ES Discrete soundtracks, which use a discrete surround back channel for true 6.1/7.1-channel playback. The seven totally separate audio channels provide better spatial imaging and 360-degree sound localization, perfect for sounds that pan across the surround channels. Use it with DVDs that bear the DTS-ES logo, especially those with a DTS-ES Discrete soundtrack.	DTS-ES	7.1-SB 9.1-SB/FH 9.1-SB/FW
DTS-ES Matrix[*6] *ES Matrix*	This mode is for use with DTS-ES Matrix soundtracks, which use a matrix-encoded back-channel for 6.1/7.1-channel playback. Use it with DVDs that bear the DTS-ES logo, especially those with a DTS-ES Matrix soundtrack.	DTS-ES	7.1-SB 9.1-SB/FH 9.1-SB/FW

Listening Mode	Description	Input Source	Speaker Layout
Dolby Pro Logic IIx[*7] **Dolby Pro Logic II** PL Ⅱ Movie PL Ⅱ Music PL Ⅱ Game PL Ⅱx Movie PL Ⅱx Music PL Ⅱx Game	**Dolby Pro Logic IIx** expands any 2-channel source for 7.1-channel playback. It provides a very natural and seamless surround-sound experience that fully envelops the listener. As well as music and movies, video games can also benefit from the dramatic spatial effects and vivid imaging.	STEREO	3.1 5.1 7.1 9.1
	If you're not using any surround back speakers, **Dolby Pro Logic II** will be used instead of Dolby Pro Logic IIx. • **Dolby PLIIx Movie** Use this mode with any stereo or Dolby Surround (Pro Logic) movie (e.g., TV, DVD, VHS). • **Dolby PLIIx Music** Use this mode with any stereo or Dolby Surround (Pro Logic) music source (e.g., CD, radio, cassette, TV, VHS, DVD). • **Dolby PLIIx Game** Use this mode with video games, especially those that bear the Dolby Pro Logic II logo.		
	• **Dolby PLIIx Movie** • **Dolby PLIIx Music** These modes use the Dolby Pro Logic IIx modes to expand 5.1-channel sources for 7.1-channel playback.	5.1ch DD EX	7.1-SB 9.1-SB/FH 9.1-SB/FW
Dolby Pro Logic IIz Height PL Ⅱz Height	**Dolby Pro Logic IIz Height** is designed to more effectively use existing program material when height channel speaker outputs are present. **Dolby Pro Logic IIz Height** can be used to upmix a variety of sources from movies and music, but are particularly well-suited to upmix game content.	STEREO 5.1ch 7.1ch DTS-ES DD EX	7.1-FH 9.1-SB/FH 9.1-FH/FW
Dolby EX Dolby EX Dolby D EX	These modes expand 5.1-channel sources for 6.1/7.1-channel playback. They're especially suited to Dolby EX soundtracks that include a matrix-encoded surround back channel. The additional channel adds an extra dimension and provides an enveloping surround sound experience, perfect for rotating and fly-by sound effects.	5.1ch DD EX	7.1-SB 9.1-SB/FH 9.1-SB/FW

Listening Mode	Description	Input Source	Speaker Layout
DTS Neo:X[*8]	This mode expands various sources and various inputs up to 9.1 channel. DTS Neo:X provides semi-spherical sound field adding height/wide speakers to create a natural, immersive and spacious surround soundscape.		
Neo:X Cinema Neo:X Music Neo:X Game	• **DTS Neo:X Cinema** This mode is suitable for movie viewing. • **DTS Neo:X Music** This mode is suitable for any music source. • **DTS Neo:X Game** This mode is suitable for video games.	STEREO 5.1ch 7.1ch DTS-ES DD EX	3.1 5.1 7.1 9.1
Audyssey DSX[*9] Audyssey DSX	• **Audyssey DSX** Audyssey DSX® is a scalable system that adds new speakers to improve surround impression. Starting with a 5.1 system Audyssey DSX first adds Wide channels for the biggest impact on envelopment. Research in human hearing has proven that information from the Wide channels is much more critical in the presentation of a realistic soundstage than Back Surround channels found in traditional 7.1 systems. Audyssey DSX then creates a pair of Height channels to reproduce the next most important acoustical and perceptual cues. In addition to these new Wide and Height channels, Audyssey DSX applies Surround Envelopment Processing to enhance the blend between the front and surround channels.	5.1ch 7.1ch DTS-ES DD EX	7.1-FH 7.1-FW 9.1

Listening Mode	Description	Input Source	Speaker Layout
PLⅡ Movie DSX PLⅡ Music DSX PLⅡ Game DSX PLⅡx Movie DSX	• **Dolby Pro Logic II/IIx**[*7] **Movie + Audyssey DSX** • **Dolby Pro Logic II/IIx**[*7] **Music + Audyssey DSX** • **Dolby Pro Logic II/IIx**[*7] **Game + Audyssey DSX** The combination of Dolby Pro Logic II/IIx and Audyssey DSX® modes can be used.	STEREO	7.1-FH 7.1-FW 9.1
PLⅡx Music DSX PLⅡx Game DSX	• **Dolby Pro Logic IIx Movie + Audyssey DSX** • **Dolby Pro Logic IIx Music + Audyssey DSX** The combination of Dolby Pro Logic IIx and Audyssey DSX modes can be used.	5.1ch DD EX	9.1-SB/FH 9.1-SB/FW
Dolby EX DSX	The combination of **Dolby EX** and **Audyssey DSX** modes can be used.	5.1ch DD EX	7.1 9.1
THX	Founded by George Lucas, THX develops stringent standards that ensure movies are reproduced in movie theaters and home theaters just as the director intended. THX Modes carefully optimize the tonal and spatial characteristics of the soundtrack for reproduction in the home-theater environment. They can be used with 2-channel matrixed and multichannel sources. Surround back speaker output depends on the source material and the selected listening mode.		

Listening Mode	Description	Input Source	Speaker Layout
THX Cinema THX Music THX Games	• **THX Cinema** THX Cinema mode corrects theatrical soundtracks for playback in a home theater environment. In this mode, THX Loudness Plus is configured for cinema levels and Re-EQ, Timbre Matching, and Adaptive Decorrelation are active. • **THX Music** THX Music mode is tailored for listening to music, which is typically mastered at significantly higher levels than movies. In this mode, THX Loudness Plus is configured for music playback and only Timbre Matching is active. • **THX Games** THX Games mode is meant for spatially accurate playback of game audio, which is often mixed similarly to movies but in a smaller environment. THX Loudness Plus is configured for game audio levels, with Timbre Matching active.	5.1ch 7.1ch DTS-ES DD EX	5.1 7.1 9.1
	• **Dolby Pro Logic II/IIx**[*7] **Movie + THX Cinema** • **Dolby Pro Logic II/IIx**[*7] **Music + THX Music** • **Dolby Pro Logic II/IIx**[*7] **Game + THX Games** The combination of Dolby Pro Logic II/IIx and THX Cinema/Music/Games modes can be used. The **PLII/PLIIx** and **THX** indicators light on the AV receiver's display.	STEREO	5.1 7.1 9.1
	• **Dolby Pro Logic IIx Movie + THX Cinema** • **Dolby Pro Logic IIx Music + THX Music** The combination of Dolby Pro Logic IIx and THX Cinema/Music modes can be used. The **PLIIx** and **THX** indicators light on the AV receiver's display.	5.1ch DD EX	7.1-SB 9.1-SB/FH 9.1-SB/FW

Listening Mode	Description	Input Source	Speaker Layout
	• **Dolby Pro Logic IIz Height + THX Cinema** • **Dolby Pro Logic IIz Height + THX Music** • **Dolby Pro Logic IIz Height + THX Games** The combination of Dolby Pro Logic IIz Height and THX Cinema/Music/Games modes can be used. The **PLIIz** and **THX** indicators light on the AV receiver's display.	STEREO 5.1ch 7.1ch DTS-ES DD EX	7.1-FH 9.1-SB/FH 9.1-FH/FW
	• **DTS Neo:X Cinema + THX Cinema** • **DTS Neo:X Music + THX Music** • **DTS Neo:X Game + THX Games** The combination of DTS Neo:X Cinema/Music/Game and THX Cinema/Music/Games modes can be used. The **Neo:X** indicator lights on the AV receiver's display.		7.1 9.1
THX S2 Cinema THX S2 Music THX S2 Games	• **THX Select2 Cinema** This mode expands 5.1-channel sources for 7.1- channel playback. It does this by analyzing the composition of the surround source, optimizing the ambient and directional sounds to produce the surround back channel output. • **THX Select2 Music** This mode is designed for use with music. It expands 5.1-channel sources for 7.1-channel playback. • **THX Select2 Games** This mode is designed for use with video games. It can expand 5.1-channel sources for 6.1/7.1-channel playback.	5.1ch DD EX	7.1-SB 9.1-SB/FH 9.1-SB/FW
THX Surr EX	• **THX Surround EX** This mode expands 5.1-channel sources for 6.1/7.1- channel playback. It's especially suited to Dolby Digital EX sources. THX Surround EX, also known as Dolby Digital Surround EX, is a joint development between Dolby Laboratories and THX Ltd.	5.1ch DD EX	7.1-SB 9.1-SB/FH 9.1-SB/FW

Listening Mode	Description	Input Source	Speaker Layout
	• **Dolby Pro Logic II Game + THX Select2 Games** The combination of Dolby Pro Logic II Game and THX Select2 Games modes can be used. The **PLII** and **THX** indicators light on the AV receiver's display.	STEREO	7.1-SB 9.1-SB/FH 9.1-SB/FW
	• **Dolby Pro Logic IIz Height + THX Select2 Games** The combination of Dolby Pro Logic IIz Height and THX Select2 Cinema/Music/Games modes can be used.	STEREO 5.1ch DD EX	9.1-SB/FH
	• **Dolby Pro Logic IIz Height + THX Select2 Cinema** • **Dolby Pro Logic IIz Height + THX Select2 Music**	5.1ch DD EX	9.1-SB/FH

Note

*1 Pure Audio cannot be selected when Zone 2/3 is active.
Besides, if you activate Zone 2/3 while Pure Audio is selected, the listening mode will automatically switch to Direct.
*2 Based on the audio channel signal contained in the source, the corresponding speakers will output the sound.
*3 The AV receiver can input the DSD signal from HDMI IN. Depending on the player, setting the output on the player side to PCM might bring better sound.
*4 For the Blu-ray Discs, Dolby Digital is used in a 3.1/5.1-channel speaker system.
*5 DTS is used depending on the configuration of the AV receiver.
*6 If there are no surround back speakers, DTS is used.
*7 If there are no surround back speakers, Dolby Pro Logic II is used.
*8 DTS Neo:X cannot be selected in the case of 192 kHz input signals.
*9 This listening mode can be selected only when all the following conditions are satisfied:
– Center speaker is connected.
– Either the front high or front wide speakers are connected.
• The listening modes cannot be selected with some source formats.

Using the Home Menu

The Home menu provides quick access to frequently used menus.

The Home menu appears only on a TV that is connected to HDMI OUT MAIN. If your TV is connected to other video outputs, use the AV receiver's display when changing settings.

1 Press RECEIVER followed by HOME.

The Home menu will be superimposed on the TV screen.

Tip

- Alternatively, you can use **HOME** on the AV receiver.

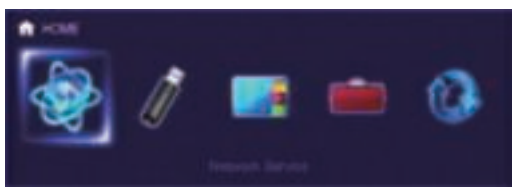

2 Use ◄/► or ▲/▼ and ENTER to make the desired selection.

Press **HOME** to close the menu.

■ Network Service

You need to connect the AV receiver to your home network (➔ page 107).

▸With this selection, you can use various Internet radio services or play the contents stored in media connected to your home network (DLNA) (➔ pages 29 to 32). Note that this selection will be grayed out for a short while after the AV receiver is turned on. Please wait until it becomes operable.

Press **ENTER** to display the network service screen. If you want to use the Internet radio services, use ▲/▼/◄/► to select the desired service. Pressing **ENTER** again switches to that selection. If you want to play music files on a server, use ▲/▼/◄/► to select "**DLNA**" and then press **ENTER**.

■ USB

▸With this selection, you can play contents of portable players (iPod, etc.) and USB storage devices connected to the AV receiver's **USB** port (➔ pages 28, 29). Note that this selection will be grayed out for a short while after the AV receiver is turned on. Please wait until it becomes operable.

First, press **USB** repeatedly to select the "**USB(Front)**" or "**USB(Rear)**" input.

Then, press **ENTER** to select a drive or browse the contents of the media connected, followed by ▲/▼ to select the desired folder or track. Pressing **ENTER** as a track is selected will start playback.

Note

- Only the front-panel USB input is compatible with iPod/iPhone.

■ InstaPrevue

▸With this selection, you can preview audio/video streams coming from HDMI inputs (**HDMI IN 1/2/3/4/AUX INPUT**). Even with multiple components connected through HDMI, you can easily switch between inputs as their previews are displayed on a single screen.

Press **ENTER** to display the main preview (currently selected HDMI input) and the additional previews (other HDMI inputs). Using ▲/▼ or ◄/► to select a preview thumbnail and pressing **ENTER** will switch the AV receiver to that input source.

Tip

- If no video signals are present, the thumbnails will be filled in black.
- You can specify the number of preview thumbnails as well as their positioning on screen (➔ page 76).

Note

- This function cannot be selected when:
  - **HDMI IN 5/6/7** is the current HDMI input source, or
  - No signal is present on the current input source.
- Depending on video signals, the picture may not be properly rendered on the preview thumbnails of InstaPrevue.

■ Setup

▸With this selection, you can access the common settings of the on-screen Setup menu.

Press **ENTER** to display the Setup menu (➔ page 55).

Tip

- You can also access frequently used settings from Quick Setup (➔ page 51).

■ Firmware Update

▸With this selection, you can update the firmware of the AV receiver. Note that this selection will be grayed out for a short while after the AV receiver is turned on. Please wait until it becomes operable.

Press **ENTER** to start the procedure (➔ page 97).

Using the Sleep Timer

With the sleep timer, you can set the AV receiver to turn off automatically after a specified period.

1 Press RECEIVER once followed by SLEEP repeatedly to select the required sleep time.

The sleep time can be set from 90 to 10 minutes in 10 minute steps.

The **SLEEP** indicator lights on the AV receiver's display when the sleep timer has been set. The specified sleep time appears for about 5 seconds, then the previous display reappears.

Tip

- If you need to cancel the sleep timer, press **SLEEP** repeatedly until the **SLEEP** indicator goes off.
- To check the time remaining until the AV receiver sleeps, press **SLEEP**. Note that if you press again on **SLEEP** as the time being displayed is 10 minutes or less, the sleep timer will go off.

Setting the Display Brightness

You can adjust the brightness of the AV receiver's display, and switch the **MASTER VOLUME** indicator off and on in conjunction.

1 Press RECEIVER once followed by DIMMER repeatedly to cycle through the following patterns:

- Normal brightness + indicator off.
- Dim brightness + indicator off.
- Dimmer brightness + indicator off.
- Normal brightness + indicator on (default).

Tip

- **(North American models)** Alternatively, you can use **DIMMER** on the AV receiver.

Displaying Source Information

You can display various information about the current input source as follows.

1 Press RECEIVER once followed by DISPLAY repeatedly to cycle through the available information.

Tip

- Alternatively, you can use **DISPLAY** on the AV receiver.

The following information can be typically displayed.

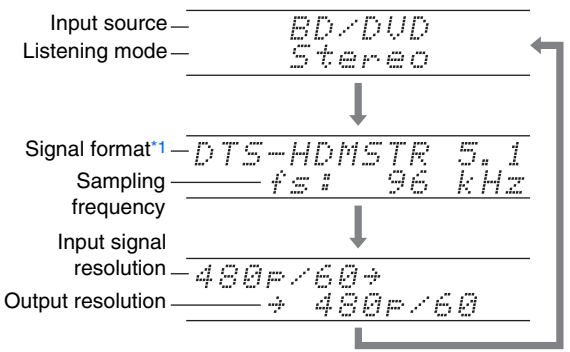

*1 If the input signal is digital, the signal format is displayed. Information is displayed for about three seconds, then the previously displayed information reappears.

Changing the Input Display

When you connect an RI-capable Onkyo component, you must configure the input display so that RI can work properly.

This setting can be done only from the front panel.

1 Press TV/CD or GAME1.

"**TV/CD**" or "**GAME1**" appears on the AV receiver's display.

2 Press and hold down the same button (about 3 seconds) to change the input display.

Repeat this step to select the desired input display.

■ **TV/CD:** TV/CD → DOCK → TAPE → TV/CD

■ **GAME1:** GAME1 ↔ DOCK

Note

- "**DOCK**" can be selected for the "**TV/CD**", "**GAME1**" input selector, but not at the same time.
- Enter the appropriate remote control code before using the remote controller for the first time (➔ page 86).

Using the Whole House Mode

The Whole House Mode is useful when you want to add extra background music to your home party; this allows you to enjoy the same stereo music as the main room in separate rooms (Zone 2/3).

The Whole House Mode selects the same input source for Multi Zone as the main room's.

See also:

- "Speaker Setup" (➔ page 59)
- "Multi Zone" (➔ page 78)

1 Press WHOLE HOUSE MODE on the front panel.

To cancel the Whole House Mode, change the input source for the main room or select a listening mode (➔ page 40).

Note

- The Whole House Mode only supports analog audio.
- To adjust the volume of Multi Zone, switch the AV receiver to Multi Zone control. See "Adjusting the Volume for Zones" (➔ page 80) for the volume adjustment of Multi Zone.
- The Whole House Mode is not available in the following cases:
  – The "**Audio TV Out**" setting is set to "**On**" (➔ page 75).
  – "**HDMI Control(RIHD)**" is set to "**On**" (➔ page 75) and you're listening through your TV speakers.
  – Digital Processing Crossover Network is used (➔ page 63).

Selecting Speaker Layout

You can set which speakers you want to use by priority.

1 Press RECEIVER followed by SP (speaker layout) repeatedly to select:

9.1 ch playback

Important:

- The following layouts are only available when the "**Preout to External Amplifier**" setting (➔ page 59) and all corresponding speakers are enabled.

▸ **Speaker Layout:SB/FH**:
The sounds from surround back and front high speakers are output by priority.

▸ **Speaker Layout:SB/FW**:
The sounds from surround back and front wide speakers are output by priority.

▸ **Speaker Layout:FH/FW**:
The sounds from front high and front wide speakers are output by priority.

7.1 ch playback

▸ **Speaker Layout:FH**:
The sound from front high speakers is output by priority.

▸ **Speaker Layout:FW**:
The sound from front wide speakers is output by priority.

▸ **Speaker Layout:SB**:
The sound from surround back speakers is output by priority.

Note

- This setting is not available in either of the following cases:
  – The "**Speakers Type (Front)**" setting is set to "**Bi-Amp**" or "**Digital Crossover**".
  – The "**Powered Zone 2/3**" setting is set to "**Yes**" and Zone 2/3 is turned on.
- Playback conditions may be limited depending on the settings in "Speaker Settings" (➔ page 59) and "Speaker Configuration" (➔ page 60).
- When a listening mode which doesn't support front high, front wide or surround back speakers is used, this setting cannot be selected.

Muting the AV Receiver

You can temporarily mute the output of the AV receiver.

1 Press RECEIVER followed by MUTING.

The output is muted and the **MUTING** indicator flashes on the AV receiver's display.

Tip

- To unmute, press **MUTING** again or adjust the volume.
- Muting is automatically cancelled when the AV receiver is set to standby.

Using Headphones

1 Connect a pair of stereo headphones with a standard plug (1/4 inch or 6.3 mm) to the PHONES jack.

While the headphones plug is inserted in the **PHONES** jack, ∩ indicator lights.

Note

- Always turn down the volume before connecting your headphones.
- While the headphones plug is inserted in the **PHONES** jack, the speakers are turned off. (The Powered Zone 2/3 speakers are not turned off.)
- When you connect a pair of headphones, the listening mode is set to Stereo, unless it's already set to Stereo, Mono, Direct, or Pure Audio.
- If you connect an iPod or iPhone to the **USB** port on the AV receiver, no sound will be output from the headphones jack.

Using Easy Macros

By using **ACTIVITIES** in Easy macro mode, you can sequentially operate Onkyo components via simple commands from a single-button press.
These commands are user-definable. See "Using Normal Macros" (➔ page 90).

1 Press ACTIVITIES (MY MOVIE, MY TV, or MY MUSIC) to start the Easy macro command.
The default sequences of actions are described below.
To change the related source component, see "Changing the Source Components" shown later in this chapter.

■ MY MOVIE

First, the TV, the Onkyo DVD player, and the AV receiver are turned on. The input selector is set to "**BD/DVD**". Finally the player starts playback.*1

*1 Depending on the start-up time of your Blu-ray Disc/DVD player, the AV receiver may not activate this playback command. In this case, press ► on the remote controller.

■ MY TV

First, the TV, the cable set-top box, and the AV receiver are turned on. Then the input selector is set to "**CBL/SAT**".

■ MY MUSIC

The Onkyo CD player and the AV receiver are turned on. The input selector is set to "**TV/CD**". Finally, the player starts playback.

Note

- While the Easy Macro command is being processed, you cannot use other **ACTIVITIES**. If you want to operate other components, first press **ALL OFF** and use the desired **ACTIVITIES**.

Turning Off the Components

This button turns off all components activated by the Easy Macro mode.

1 Press ALL OFF.

First, the related components stop and turn off. Second, the AV receiver turns off. Finally, the TV turns off (or enters standby mode).*1*2

*1 This step doesn't apply to **MY MUSIC**, with the default settings.
*2 With some televisions, the power may not be turned off (or enter standby mode).

Changing the Source Components

You can change the source components activated by the Easy Macro mode.

1 While holding down REMOTE MODE for the playback component you wish to assign, press and hold down the ACTIVITIES to be changed (MY MOVIE, MY TV, or MY MUSIC) (about 3 seconds).
ACTIVITIES flashes twice, indicating that the change is complete.

Examples:
If you wished to use **MY MUSIC** to start the Onkyo cassette recorder, you would press and hold down **MY MUSIC** (about 3 seconds) while holding down **TV/CD** until it flashes twice.

Restoring Default

You can restore **ACTIVITIES** to the default settings.

1 While holding down HOME, press and hold down ALL OFF until ALL OFF lights (about 3 seconds).

2 Release HOME and ALL OFF, and press ALL OFF again.
ALL OFF flashes twice.

On-screen Setup

With the AV receiver connected to a TV, there are two ways of changing the settings on-screen: using the Quick Setup or the Setup menu (**HOME**).

■ Quick Setup

The Quick Setup provides quick access to frequently used settings. You can change settings and view the current information.

■ Setup menu (HOME)

The Setup menu (**HOME**) provides a convenient way to change the AV receiver's various settings. Settings are organized into 9 categories.

The on-screen menus appear only on a TV that is connected to HDMI OUT MAIN. If your TV is connected to other video outputs, use the AV receiver's display when changing settings.

This section describes the procedure for using the remote controller unless otherwise specified.

Using the Quick Setup

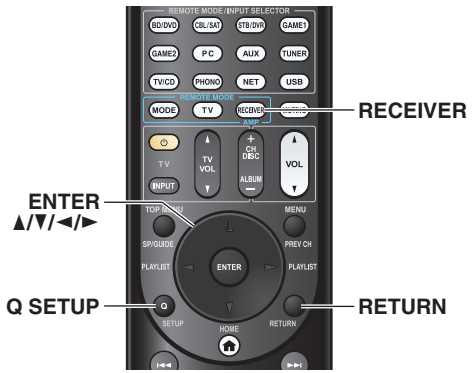

1 **Press RECEIVER followed by Q SETUP.**
The Quick Setup will be superimposed on the TV screen.

2 **Use ▲/▼ and ENTER to make the desired selection.**
Press **Q SETUP** to close the menu.
Press **RETURN** to return to the previous menu.

Explanatory Notes

① ■ **Music Optimizer**
② ▸ **Off**
▸ **On**

① Setting target
② Setting options (default setting underlined)

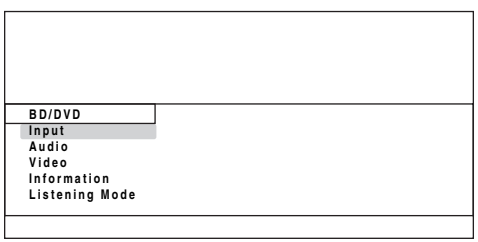

■ Input

▸ You can select input sources and view the following information: the name of input selectors, input assignments, radio information, and ARC function setting.
In addition, previews of the video streams coming from HDMI inputs (**HDMI IN 1/2/3/4/AUX INPUT**) are displayed.*1

Use ▲/▼ to select an input source and view the related information. Pressing **ENTER** switches to the selected input source.

■ Audio (➔ page 52)

▸ You can change the following settings: "**Sound Program**", "**Bass**", "**Treble**", "**Subwoofer Level**", "**Center Level**", "**Dolby Volume***2", "**Audyssey**", "**Dynamic EQ***2*3", "**Dynamic Volume***2*3", "**Late Night**", "**Music Optimizer**", "**Re-EQ**", "**Re-EQ(THX)**" and "**Screen Centered Dialog**".

■ Video*4

▸ You can change the following settings: "**Wide Mode**" and "**Picture Mode***5".

See also:
- "Picture Adjust" (➔ page 69)

■ Information*6

▸ You can view the information of the following items: "**Audio**", "**Video**" and "**Tuner**".

■ Listening Mode*7

▸ You can select the listening modes that are grouped in the following categories: "**MOVIE/TV**", "**MUSIC**", "**GAME**", and "**THX**".

Use ▲/▼ to select the category and ◄/► to select the listening mode. Press **ENTER** to switch to the selected listening mode.

↳ **To be continued**

Note

*1 • The video preview is not displayed when:
– **HDMI IN 5/6/7** is the current HDMI input source, or
– No signal is present on the current input source.
• The video of the currently-selected input is displayed on the main screen, not on a preview thumbnail.

*2 "**Dolby Volume**", "**Dynamic EQ**" and "**Dynamic Volume**" cannot be selected when any of the THX listening modes is selected, with "**Loudness Plus**" set to "**On**" or "**Preserve THX Settings**" set to "**Yes**" (➔ page 62).

*3 When "**Dynamic EQ**" is set to "**On**" or "**Dynamic Volume**" is set to anything else than "**Off**", "**Dolby Volume**" will be switched to "**Off**" (➔ page 65).

*4 • When the "**Monitor Out**" setting is set to "**Sub**", "**Video**" cannot be selected (➔ page 57).
• This setting cannot be used with the **NET** input selector.

*5 Only when you have selected "**Custom**" in the "**Picture Mode**" (➔ page 70), pressing **ENTER** allows you to adjust the following items via the Quick Setup: "**Brightness**", "**Contrast**", "**Hue**" and "**Saturation**". Press **RETURN** to return to the "**Picture Mode**" setting.

*6 Depending on the input source and listening mode, not all channels shown here output the sound.

*7 • This setting is not available in either of the following cases:
– The "**Audio TV Out**" setting is set to "**On**" (➔ page 75).
– "**HDMI Control(RIHD)**" is set to "**On**" (➔ page 75) and you're listening through your TV speakers.

Using the Audio Settings of Quick Setup

You can change various audio settings from the Quick Setup (➔ page 51).

Note

• These settings are not available in either of the following cases:
– The "**Audio TV Out**" setting is set to "**On**" (➔ page 75).
– "**HDMI Control(RIHD)**" is set to "**On**" (➔ page 75) and you're listening through your TV speakers.

Sound Program

■ **Sound Program**

▸ **Stereo Source 1**, **Stereo Source 2**, **Stereo Source 3**, **Multich Source 1**, **Multich Source 2**, **Multich Source 3**

▸ **Off**

With this setting, you can select the combination of settings that you registered in "**Sound Program Edit**" (➔ page 66).

Note

• If the input selector is changed, the "**Sound Program**" setting is switched back to "**Off**".

Tone Control

■ **Bass**

▸ **–10dB** to **0dB** to **+10dB** in 2 dB steps
You can boost or cut low-frequency sounds output from the front speakers.

■ **Treble**

▸ **–10dB** to **0dB** to **+10dB** in 2 dB steps
You can boost or cut high-frequency sounds output from the front speakers.

You can adjust the bass and treble for the front speakers, except when the Direct, Pure Audio or THX listening mode is selected.

Operating on the AV receiver

1 **Press TONE repeatedly to select either "Bass" or "Treble".**

2 **Use – and + to adjust.**

Speaker Levels

■ **Subwoofer Level**

▸ **–15.0dB** to **0.0dB** to **+12.0dB** in 0.5 dB steps

■ **Center Level**

▸ **–12.0dB** to **0.0dB** to **+12.0dB** in 0.5 dB steps

You can adjust the volume of each speaker while listening to an input source.

These temporary adjustments are cancelled when the AV receiver is set to standby. To save the setting you made here, go to "Level Calibration" (➔ page 61) before setting the AV receiver to standby.

Note

• You cannot use these function while the AV receiver is muted.
• These settings cannot be used while a pair of headphones is connected.
• Speakers that are set to "**No**" or "**None**" in "Speaker Configuration" (➔ page 60) cannot be adjusted.
• When "**Sound Program**" is enabled, "**Subwoofer Level**" cannot be used if the "**Subwoofer**" setting is set to "**No**" in "**Sound Program Edit**".

Dolby Volume

■ Dolby Volume

See "Dolby Volume" of "Audio Adjust" (➔ page 65).

Note

- This setting cannot be used in either of the following cases:
  – The Pure Audio or Direct listening mode is selected.
  – Any of the THX listening modes is selected, with "**Loudness Plus**" set to "**On**" or "**Preserve THX Settings**" set to "**Yes**" (➔ page 62).
- When "**Dolby Volume**" is set to "**On**", the "**Dynamic EQ**" and "**Dynamic Volume**" settings of all input selectors are switched to "**Off**".
- When "**Sound Program**" is enabled, the setting must be made with "**Sound Program Edit**".

Audyssey®

■ Audyssey

See "Audyssey" in "Source Setup" (➔ page 67).

■ Dynamic EQ

See "Dynamic EQ" in "Source Setup" (➔ page 67).

■ Dynamic Volume

See "Dynamic Volume" in "Source Setup" (➔ page 68).

Note

- These technologies can be used when all the following conditions are met:
  – Room Correction and Speaker Setup is completed. Note that "**Audyssey**" requires the "**Audyssey MultEQ XT32 Full Calibration**" method.
  – Any listening mode other than Direct or Pure Audio is selected.
  – A pair of headphones is not connected.
- The setting is stored individually for each input selector.
- "**Dynamic EQ**" and "**Dynamic Volume**" cannot be selected when any of the THX listening modes is selected, with "**Loudness Plus**" set to "**On**" or "**Preserve THX Settings**" set to "**Yes**" (➔ page 62).
- When "**Sound Program**" is enabled, the setting must be made with "**Sound Program Edit**".

Late Night

■ Late Night

For **Dolby Digital** and **Dolby Digital Plus** sources, the options are:

- **Off**
- **Low**:
  Small reduction in dynamic range.
- **High**:
  Large reduction in dynamic range.

For **Dolby TrueHD** sources, the options are:

- **Auto**:
  The Late Night function is set to "**On**" or "**Off**" automatically.
- **Off**
- **On**

Turn this setting on to reduce the dynamic range of Dolby Digital material so that you can still hear quiet parts even when listening at low volume levels—ideal for watching movies late at night when you don't want to disturb anyone.

Note

- The effect of the Late Night function depends on the material that you are playing and the intention of the original sound designer, and with some material there will be little or no effect when you select the different options.
- The Late Night function can be used only when the input source is Dolby Digital, Dolby Digital Plus, or Dolby TrueHD.
- The Late Night function is set to "**Off**" when the AV receiver is set to standby. For Dolby TrueHD sources, it will be set to "**Auto**".
- With Dolby TrueHD sources, the Late Night function cannot be used when "**TrueHD Loudness Management**" is set to "**Off**".
- The Late Night function cannot be used when "**Dolby Volume**" is set to "**On**".

Music Optimizer

■ Music Optimizer

- **Off**
- **On**

The Music Optimizer function enhances the sound quality of compressed music files. When set to "**On**", the **M.Opt** indicator lights on the AV receiver's display.

Note

- The Music Optimizer function only works with PCM digital audio input signals with a sampling rate below 48 kHz and analog audio input signals.
- The Music Optimizer is disabled when the Direct or Pure Audio listening mode is selected.
- The setting is stored individually for each input selector.
- When "**Sound Program**" is enabled, the setting must be made with "**Sound Program Edit**".

Re-EQ

With the Re-EQ function, you can compensate a soundtrack whose high-frequency content is too harsh, making it more suitable for home theater viewing.

■ Re-EQ

- **Off**
- **On**

This function can be used with the following listening modes: Dolby Digital, Dolby Digital Plus, Dolby TrueHD, Multichannel, DTS, DTS-HD High Resolution Audio, DTS-HD Master Audio, DTS Express, DSD, Dolby EX, Dolby Pro Logic IIz Height, Dolby PLIIx Movie, DTS Neo:X Cinema.

■ Re-EQ(THX)

- **Off**
- **On**

This function can be used with the following listening modes: THX Cinema, THX Surround EX, and THX Select2 Cinema.

Note

- These settings are stored individually for each input selector. In THX listening mode however, the setting will return to "**On**" when the AV receiver is turned off.
- These settings cannot be used while a pair of headphones is connected.

Screen Centered Dialog

By using the front high speaker, this function moves the center image of dialogs etc. upwards, so that the image of dialogs is fixed to the display height.

■ Screen Centered Dialog

As the value increases, the center image moves upwards.

- **0**
- **1** to **5**:
  Screen Centered Dialog on.

Note

- The "**Screen Centered Dialog**" can be used when a compatible listening mode is selected.
- This setting cannot be used while a pair of headphones is connected.

Using the Setup Menu (HOME)

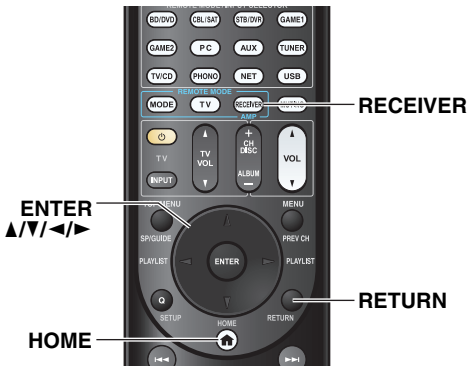

1 **Press RECEIVER followed by HOME.**

2 **Use ◄/► to select "Setup", and then press ENTER.**

3 **Use ▲/▼ to select a main menu item, and then press ENTER.**

4 **Use ▲/▼ to select a sub menu item, and then press ENTER.**

5 **Use ▲/▼ to select a setting target, and use ◄/► to change the setting.**
Press **HOME** to close the menu.
Press **RETURN** to return to the previous menu.

Note

- This procedure can also be performed on the AV receiver by using **SETUP**, the cursor and enter (middle) buttons.
- During Audyssey MultEQ® XT32 Room Correction and Speaker Setup, messages, etc., that are displayed on the TV screen will appear on the AV receiver's display.

■ Screen Saver

If there is no video signal on the current input source and no operation for a specific time (three minutes by default), a screen saver automatically comes on.

Tip

- The time until the screen saver activates itself can be changed in the "**Screen Saver**" setting (➔ page 74).
- The screen will return to its previous state if the AV receiver is operated.

Explanatory Notes

① Main Menu | Speaker Setup
② **Speaker Configuration**
③ ■ **Subwoofer**
④ **Yes** / **No**

① Main Menu
② Sub Menu
③ Setting target
④ Setting options (default setting underlined)



About the HYBRID STANDBY Indicator

By way of optimized circuitry, this function reduces power consumption when the AV receiver is in standby mode. The **HYBRID STANDBY** indicator will light in either of the following conditions:

– "**HDMI Through**" is enabled (the **HDMI** indicator is off).
– "**Network Standby**" is enabled (the **NET** indicator is off).

HYBRID STANDBY

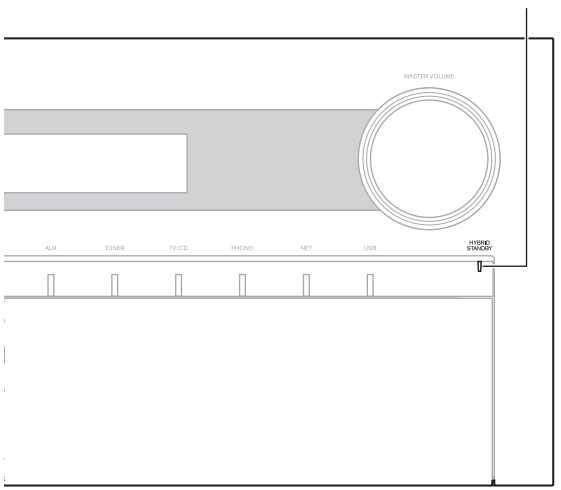

Note

• If Zones are turned on or, if a mobile device connected to the Front Input (MHL) is charging, the **HYBRID STANDBY** indicator won't light.

Setup Menu Items

Main menu item	Sub menu item
Input/Output Assign (➔ page 57)	Monitor Out
	HDMI Input
	Component Video Input
	Digital Audio Input
Speaker Setup (➔ page 59)	Speaker Settings
	Speaker Configuration
	Speaker Distance
	Level Calibration
	Equalizer Settings
	THX Audio Setup
	Digital Processing Crossover Network
Audio Adjust (➔ page 64)	Multiplex/Mono
	Dolby
	DTS
	Audyssey DSX
	Theater-Dimensional
	LFE Level
	Sound Program Edit
Source Setup (➔ page 67)	Audyssey
	IntelliVolume
	A/V Sync
	Name Edit
	Picture Adjust
	Audio Selector
Listening Mode Preset (➔ page 72)	BD/DVD
	CBL/SAT
	STB/DVR
	GAME1
	GAME2
	PC
	AUX
	TUNER
	TV/CD
	PHONO
	NET
	USB
Miscellaneous (➔ page 73)	Volume Setup
	OSD Setup
Hardware Setup (➔ page 74)	Tuner
	HDMI
	Auto Standby
	Network
	Initial Setup
Remote Controller Setup (➔ page 77)	Remote ID
	Remote Mode Setup
Lock Setup (➔ page 77)	Setup

Input/Output Assign

1 (RECEIVER) ► 2 (HOME) ► 3 ► 4 "Setup" ► 5

Main Menu | Input/Output Assign

Monitor Out

On the "**Monitor Out**" settings, you can select whether or not to have the video sources' images output through the HDMI output.

If you connect your TV to the HDMI output, the "**Monitor Out**" setting is automatically set and composite video and component video sources are upconverted* and output.

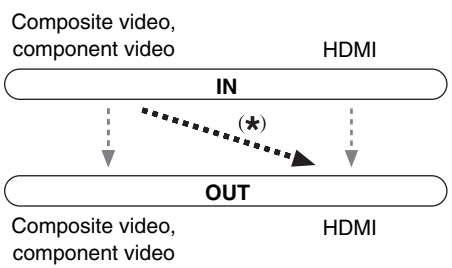

Note

- See "Video Connection Formats" (➔ page 101) for charts showing how the "**Monitor Out**" and "**Resolution**" settings affect the video signal flow through the AV receiver.

■ Monitor Out

▸ **Main**:
Select this if your TV is connected to **HDMI OUT MAIN**.

▸ **Sub**:
Select this if your TV is connected to **HDMI OUT SUB**.

▸ **Both**:
Select this if your TVs are connected to **HDMI OUT MAIN** and **HDMI OUT SUB**. Video signals are output from both HDMI outputs at the resolution supported by both TVs.

Changing the "Monitor Out" setting manually

1 Press MONITOR OUT on the front panel.
The current setting is displayed.

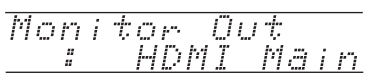

2 Press MONITOR OUT on the AV receiver repeatedly to select:
▸ **HDMI Main**, **HDMI Sub** or **Both**.

■ Resolution

▸ **Through**:
Select this to pass video through the AV receiver at the same resolution and with no conversion.

▸ **Auto**:
Select this to have the AV receiver automatically convert video at resolutions supported by your TV.

▸ **480p** (**480p/576p**), **720p**, **1080i**, **1080p**:
Select the desired output resolution.

▸ **1080p/24**:
Select this for 1080p output at 24 frames per second.

▸ **4K Upscaling**:
Select this for an output resolution four times that of 1080p. Depending on the resolution supported by your TV, it will result in either 3840 × 2160 or 4096 × 2160 pixels.

▸ **Source**:
Select this for an output following the resolution level set in "**Picture Adjust**" (➔ page 69).

You can specify the output resolution for **HDMI OUT MAIN** and have the AV receiver upconvert the picture resolution as necessary to match the resolution supported by your TV.

Tip

- You can see the picture by pressing **ENTER** to check the "**Resolution**" setting (excluding **NET** input source).

Note

- Depending on the incoming video signal, the video playback may not be smooth or the vertical resolution may be lowered. In this case select anything other than "**1080p/24**".
- With some TVs, there may be no picture when this setting is set to "**4K Upscaling**".
- If the "**Monitor Out**" setting is set to "**Sub**", this setting is fixed to "**Through**".
- If the "**Monitor Out**" setting is set to "**Both**", this setting is fixed to "**Auto**".

HDMI Input

If you connect a video component to an HDMI input, you must assign that input to an input selector. For example, if you connect your Blu-ray Disc/DVD player to **HDMI IN 2**, you must assign "**HDMI2**" to the "**BD/DVD**" input selector.

If you've connected your TV to the AV receiver with an HDMI cable, composite video and component video sources can be upconverted* and output by the HDMI output. You can set this for each input selector by selecting the "**- - - - -**" option. See "Video Connection Formats" for more information on video signal flow and upconversion (➔ page 101).

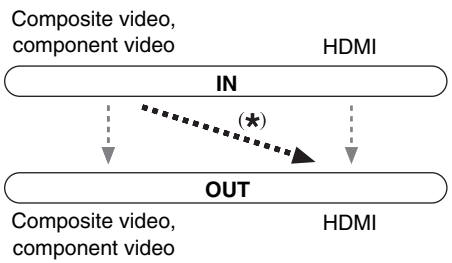

Here are the default assignments.

Input selector	Default assignment
BD/DVD	**HDMI1**
CBL/SAT	**HDMI2**
STB/DVR	**HDMI3**
GAME1	**HDMI4**
GAME2	**HDMI5**
PC	**HDMI6**[*1]
AUX	**FRONT** (Fixed)
TV/CD	**- - - - -**
PHONO	**- - - - -**

■ BD/DVD, CBL/SAT, STB/DVR, GAME1, GAME2, PC, TV/CD, PHONO

▸**HDMI1**, **HDMI2**, **HDMI3**, **HDMI4**, **HDMI5**, **HDMI6**, **HDMI7**:

Select the input to which the component has been connected.

▸**- - - - -**:

Output composite video and component video sources from the HDMI output. The video output signal from the HDMI output is the one configured in "Component Video Input".

*1 If you connect your personal computer to **PC IN** (Analog RGB), you must assign "**- - - - -**" to the "**PC**" input selector.

Each HDMI input cannot be assigned to two input selectors or more. When **HDMI1** - **HDMI7** have already been assigned, you must first set any unused input selectors to "**- - - - -**" or you will be unable to assign **HDMI1** - **HDMI7** to other input selectors.

Note

- If no video component is connected to the HDMI output (even if the HDMI input is assigned), the AV receiver selects the video source based on the setting of "Component Video Input".
- When an **HDMI IN** is assigned to an input selector as explained here, the same **HDMI IN** will be set as a priority in the "**Digital Audio Input**". In this case, if you want to use the coaxial or optical audio input, make the appropriate selection in the "**Audio Selector**" setting (➔ page 72).
- Do not assign an **HDMI IN** to the **TV/CD** selector while "**HDMI Control(RIHD)**" is set to "**On**" (➔ page 75), otherwise appropriate CEC (Consumer Electronics Control) operation will not be guaranteed.
- If you assign "**- - - - -**" to an input selector that is currently selected in "**HDMI Through**" (➔ page 75), the "**HDMI Through**" setting will be automatically switched to "**Off**".
- "**AUX**" is used only for input from the front panel.

Component Video Input

If you connect a video component to a component video input, you must assign that input to an input selector. For example, if you connect your Blu-ray Disc/DVD player to **COMPONENT VIDEO IN 2**, you must assign "**IN2**" to the "**BD/DVD**" input selector.

Here are the default assignments.

Input selector	Default assignment
BD/DVD	**IN1**
CBL/SAT	**IN2**
STB/DVR	**- - - - -**
GAME1	**- - - - -**
GAME2	**- - - - -**
PC	**- - - - -**
AUX	**- - - - -**
TV/CD	**- - - - -**
PHONO	**- - - - -**

■ BD/DVD, CBL/SAT, STB/DVR, GAME1, GAME2, PC, AUX, TV/CD, PHONO

▸**IN1**, **IN2**:

Select the input to which the component has been connected.

▸**- - - - -**:

Output composite video sources from the HDMI output.

Digital Audio Input

If you connect a component to a digital audio input, you must assign that input to an input selector. For example, if you connect your CD player to the **OPTICAL IN 1**, you must assign "**OPTICAL1**" to the "**TV/CD**" input selector. Here are the default assignments.

Input selector	Default assignment
BD/DVD	COAXIAL1
CBL/SAT	COAXIAL2
STB/DVR	COAXIAL3
GAME1	OPTICAL1
GAME2	- - - - -
PC	- - - - -
AUX	FRONT (Fixed)
TV/CD	OPTICAL2
PHONO	- - - - -

■ BD/DVD, CBL/SAT, STB/DVR, GAME1, GAME2, PC, TV/CD, PHONO

▸**COAXIAL1, COAXIAL2, COAXIAL3, OPTICAL1, OPTICAL2**:
Select the input to which the component has been connected.

▸**- - - - -**:
Select if the component is connected to an analog audio input.

Note

- When an **HDMI IN** is assigned to an input selector in "**HDMI Input**" (➔ page 58), the same **HDMI IN** will be set as a priority in this assignment. In this case, if you want to use the coaxial or optical audio input, make the appropriate selection in the "**Audio Selector**" (➔ page 72).
- Supported sampling rates for PCM signals (stereo/mono) from a digital input (optical and coaxial) are 32/44.1/48/88.2/96 kHz/16, 20, 24 bit.
- "**AUX**" is used only for input from the front panel.

Speaker Setup

1 RECEIVER ➔ 2 HOME ➔ 3 ➔ 4 "Setup" ➔ 5

Main Menu > Speaker Setup

Some of the settings in this section are set automatically by Audyssey MultEQ® XT32 Room Correction and Speaker Setup (➔ page 37).

Here you can check the settings made by Audyssey MultEQ XT32 Room Correction and Speaker Setup function, or set them manually, which is useful if you change one of the connected speakers after using Audyssey MultEQ XT32 Room Correction and Speaker Setup function.

Speaker Settings

If you change these settings, you must run Audyssey MultEQ XT32 Room Correction and Speaker Setup again (➔ page 37).

If the impedance of any speaker is 4 ohms or more but less than 6, set the minimum speaker impedance to 4 ohms.
If you bi-amp the front speakers, you must change the "**Speakers Type (Front)**" setting. For details on speaker wire connection, see "Bi-amping the Front Speakers" (➔ page 16). When connecting speakers without crossover network, you need to change the "**Speakers Type (Front)**" setting beforehand. For details on connection, refer to "Using Speakers Without Crossover Network" (➔ page 17).

Note

- When bi-amping is used, the AV receiver is able to drive up to 5.1 speakers in the main room.
- Before you change these settings, turn down the volume.

■ Speaker Impedance

▸**4ohms**:
Select if the impedance of any speaker is 4 ohms or more but less than 6.

▸**6ohms**:
Select if the impedances of all speakers are between 6 and 16 ohms.

■ Speakers Type (Front)

▸**Normal**:
Select this if you've connected your front speakers normally.

▸**Bi-Amp**:
Select this if you've bi-amped your front speakers.

▸**Digital Crossover**:
Select this if you're using speakers without crossover network.

Tip

- If "**Speakers Type (Front)**" is set to "**Digital Crossover**", a confirmation screen appears. Select "**Next (2-7. Digital Processing Crossover Network)**" to display the screen for Digital Processing Crossover Network (➔ page 63). Continue with the settings.

■ Powered Zone 2, Powered Zone 3

▸**No**

▸**Yes**:
Zone 2/3 speakers can be used. (Powered Zone 2/3 enabled).

■ Preout to External Amplifier

▸**No**

▸**Surr Back, Front High, Front Wide**

For 9.1-channel playback, select the channel output by **SB/FH/FW EXT AMP** jacks. If you select speakers whose setting in Speaker Configuration is set to "**None**", it will be automatically switched to "**80Hz (THX)**".

↳To be continued

Note

- If the "**Speakers Type (Front)**" setting is set to "**Bi-Amp**" or "**Digital Crossover**", Powered Zone 2 cannot be used.
- When the "**Powered Zone 2**" setting is set to "**Yes**" and Zone 2 is turned on, the surround back and front high speakers cannot be used.
- If the "**Powered Zone 2**" setting is set to "**No**", the "**Powered Zone 3**" setting cannot be selected.
- "**Preout to External Amplifier**" is not available in either of the following cases:
  – The "**Speakers Type (Front)**" setting is set to "**Bi-Amp**" or "**Digital Crossover**".
  – The "**Powered Zone 2**" setting is set to "**Yes**".

Speaker Configuration

This setting is set automatically by Audyssey MultEQ® XT32 Room Correction and Speaker Setup (➔ page 37).

With these settings, you can specify which speakers are connected and a crossover frequency for each speaker. Specify "**Full Band**" for speakers that can output low frequency bass sounds adequately, for example, speakers with a good sized woofer. For smaller speakers, specify a crossover frequency. Sounds below the crossover frequency will be output by the subwoofer instead of the speaker. Refer to your speaker's manuals to determine the optimum crossover frequencies. If you set up your speakers using Audyssey MultEQ XT32 Room Correction and Speaker Setup, please make sure manually that any THX speakers are set to "**80Hz(THX)**" crossover.

Subwoofer

- **Yes**
- **No**

Front

- **Full Band**
- **40Hz** to **80Hz(THX)** to **100Hz**, **120Hz**, **150Hz**, **200Hz**

Note

- If the "**Subwoofer**" setting is set to "**No**", the "**Front**" setting is fixed at "**Full Band**".

Center*1, Surround*1*2

- **Full Band**
- **40Hz** to **80Hz(THX)** to **100Hz**, **120Hz**, **150Hz**, **200Hz**
- **None**

Front Wide*1*3*4*6*8, Front High*1*3*5*6*7*8

- **Full Band**
- **40Hz** to **80Hz(THX)** to **100Hz**, **120Hz**, **150Hz**, **200Hz**
- **None**

Surround Back*1*2*3*5*6*8

- **Full Band**
- **40Hz** to **80Hz(THX)** to **100Hz**, **120Hz**, **150Hz**, **200Hz**
- **None**

Note

*1 "**Full Band**" can be selected only when "**Full Band**" is selected in the "**Front**" setting.
*2 When the "**Powered Zone 3**" setting is set to "**Yes**" and Zone 3 is turned on, this setting cannot be selected.
*3 This setting cannot be selected if the "**Speakers Type (Front)**" setting is set to "**Bi-Amp**" or "**Digital Crossover**".
*4 When the "**Powered Zone 2**" setting is set to "**Yes**", this setting cannot be selected.
*5 When the "**Powered Zone 2**" setting is set to "**Yes**" and Zone 2 is turned on, this setting cannot be selected.
*6 If the "**Surround**" setting is set to "**None**", this setting cannot be selected.
*7 When the "**Powered Zone 3**" setting is set to "**Yes**", this setting cannot be selected.
*8 If the "**Preout to External Amplifier**" setting is enabled for these speakers, "**None**" cannot be selected.

Surround Back Ch

- **1ch**:
  Select if only one surround back speaker L is connected.
- **2ch**:
  Select if two (left and right) surround back speakers are connected.

Note

- If the "**Surround Back**" setting is set to "**None**", this setting cannot be selected.

LPF of LFE (Low-Pass Filter for the LFE Channel)

- **80Hz**, **90Hz**, **100Hz**, **120Hz**
- **Off**:
  Low-Pass Filter is not applied.

With this setting, you can specify the cutoff frequency of the LFE channel's low-pass filter (LPF), which can be used to filter out unwanted hum. The LPF only applies to sources that use the LFE channel.

Note

- If you're using THX-certified speakers, select "**80Hz**".

Subwoofer Phase

- **0º**
- **180º**:
  Moves the subwoofer phase.

Note

- If the "**Subwoofer**" setting is set to "**No**", this setting cannot be selected.

■ Double Bass

This setting is **NOT** set automatically by Audyssey MultEQ® XT32 Room Correction and Speaker Setup (➔ page 37).

- **On**
- **Off(THX)**

Turn this setting on to boost bass output by feeding bass sounds from the front left, right, and center channels to the subwoofer.

Note

- When the "**Subwoofer**" setting is set to "**No**" or the "**Front**" setting to anything other than "**Full Band**", this setting is fixed to "**- - - - -**".
- This setting is set to "**On**" automatically when the "**Subwoofer**" and "**Front**" settings are set for the first time to "**Yes**" and "**Full Band**" respectively.
- If you're using THX-certified speakers, select "**Off(THX)**".

Speaker Distance

This setting is set automatically by Audyssey MultEQ XT32 Room Correction and Speaker Setup (➔ page 37).

Here you can specify the distance from each speaker to the listening position so that the sound from each speaker arrives at the listener's ears as the sound designer intended.

■ Unit

- **feet**:
  Distances can be set in feet. Range: **0.5ft** to **30.0ft** in 0.5 foot steps.
- **meters**:
  Distances can be set in meters. Range: **0.15m** to **9.00m** in 0.15 meter steps.

(The default setting varies from country to country.)

■ Left, Front Wide Left, Front High Left, Center, Front High Right, Front Wide Right, Right, Surround Right, Surround Back Right, Surround Back Left, Surround Left, Subwoofer

- Specify the distance from each speaker to your listening position.

Note

- Speakers that you set to "**No**" or "**None**" in "Speaker Configuration" cannot be selected (➔ page 60).
- When the "**Powered Zone 2**" setting is set to "**Yes**" and Zone 2 is turned on, the surround back and front high speakers cannot be used.
- When the "**Powered Zone 3**" setting is set to "**Yes**" and Zone 3 is turned on, the surround and surround back speakers cannot be used.

Level Calibration

This setting is set automatically by Audyssey MultEQ XT32 Room Correction and Speaker Setup (➔ page 37).

Here you can adjust the level of each speaker with the built-in test tone so that the volume of each speaker is the same at the listening position.

Note

- These settings cannot be calibrated in either of the following cases:
  – The "**Audio TV Out**" setting is set to "**On**" (➔ page 75).
  – "**HDMI Control(RIHD)**" is set to "**On**" (➔ page 75) and you're listening through your TV speakers.
  – The AV receiver is muted.

■ Left, Front Wide Left, Front High Left, Center*1, Front High Right, Front Wide Right, Right, Surround Right, Surround Back Right, Surround Back Left, Surround Left

- **–12.0dB** to **0.0dB** to **+12.0dB** in 0.5 dB steps.

■ Subwoofer*1

- **–15.0dB** to **0.0dB** to **+12.0dB** in 0.5 dB steps.

Note

- Speakers that you set to "**No**" or "**None**" in "Speaker Configuration" cannot be selected (➔ page 60).
- When the "**Powered Zone 2**" setting is set to "**Yes**" and Zone 2 is turned on, the surround back and front high speakers cannot be used.
- When the "**Powered Zone 3**" setting is set to "**Yes**" and Zone 3 is turned on, the surround and surround back speakers cannot be used.
- The test tone is output at the standard level for THX, which is 0 dB (absolute volume setting 82). If you normally listen at volume settings below this, be careful because the test tone will be much louder.

*1 For the center speaker and subwoofer, the level settings made by using the Quick Setup are saved in this menu (➔ page 52).

Tip

- If you're using a handheld sound level meter, adjust the level of each speaker so that it reads 75 dB SPL at the listening position, measured with C-weighting and slow reading.

Equalizer Settings

With the Equalizer settings, you can adjust the tone of speakers individually with a 7-band equalizer. The volume of each speaker can be set (➔ page 61).

■ Manual Equalizer

▸ **On**:
You can adjust the equalizer for each speaker manually. Continue with the following procedure:

1 **Press ▼ to select "Channel", and then use ◄/► to select a speaker.**

2 **Use ▲/▼ to select a frequency, and then use the ◄/► to adjust the level at that frequency.**
The volume at each frequency can be adjusted from **–6dB** to **0dB** to **+6dB** in 1 dB steps.

Tip

- You can select: "**63Hz**", "**160Hz**", "**400Hz**", "**1000Hz**", "**2500Hz**", "**6300Hz**", or "**16000Hz**". And for the subwoofer, "**25Hz**", "**40Hz**", "**63Hz**", "**100Hz**", or "**160Hz**".
- Low frequencies (e.g., 63Hz) affect bass sounds; high frequencies (e.g., 16000Hz) affect treble sounds.

3 **Use ▲ to select "Channel", and then use ◄/► to select another speaker.**
Repeat steps 1 and 2 for each speaker.
You cannot select speakers that you set to "**No**" or "**None**" in the "Speaker Configuration" (➔ page 60).

▸ **Off**:
Tone off, response flat.

Note

- When the Direct or Pure Audio listening mode is selected, the equalizer settings have no effect.
- If "**Audyssey**" is enabled, it prevails over this setting (➔ page 67).

THX Audio Setup

■ Surr Back Speaker Spacing

▸ **<1ft (<0.3m)**
▸ **1ft-4ft (0.3m-1.2m)**
▸ **>4ft (>1.2m)**

You can specify the distance between your surround back speakers.

Note

- This setting is not available in any of the following cases:
  – "**Surround Back**" is set to "**None**" (➔ page 60).
  – "**Surround Back Ch**" is set to "**1ch**" (➔ page 60).
  – "**Powered Zone 2/3**" is set to "**Yes**" (➔ page 59) and Zone 2/3 is turned on (➔ page 79).

■ THX Ultra2/Select2 Subwoofer

▸ **No**
▸ **Yes**

If you're using a THX-certified subwoofer, set this setting to "**Yes**".

Note

- If the "**Subwoofer**" setting is set to "**No**", this setting cannot be selected (➔ page 60).

■ BGC

▸ **Off**
▸ **On**

You can apply THX's Boundary Gain Compensation (BGC) to compensate the perceived exaggeration of low frequencies for listeners sitting very close to a room boundary (i.e., wall).

Note

- This setting is only available if "**THX Ultra2/Select2 Subwoofer**" is set to "**Yes**".
- If the "**Subwoofer**" setting is set to "**No**", this setting cannot be selected (➔ page 60).

■ Loudness Plus

▸ **Off**
▸ **On**

When the "**Loudness Plus**" setting is set to "**On**", it is possible to enjoy even subtle nuances of audio expression at low volume. This is only available when the THX listening mode is selected.

■ Preserve THX Settings

▸ **Yes**
▸ **No**

If this setting is set to "**Yes**", Dynamic EQ, Dynamic Volume and Dolby Volume have no effect in THX listening mode.

Note

- This setting is fixed at "**Yes**" if "**Loudness Plus**" is set to "**On**".

■ Metadata Compatible

▸ **On**:
When Metadata Compatible is set to "**On**", valid metadata is transmitted via the HDMI connections, and can be used by other devices in the system.

▸ **Off**:
When Metadata Compatible is set to "**Off**", metadata is not transmitted via the HDMI connections.

The HDMI connection in your system is used to deliver uncompressed digital audio and video information from one device to the next. There is also additional information about this digital content that can be delivered. Such additional information is referred to as "metadata". Metadata Compatible mode should be used when there are home theater components in your system, such as Blu-ray disc players, set top boxes and displays that use this additional metadata. For example, Metadata Compatible mode should be set to ON when there are THX Media Director™ Enabled devices in the system. This ensures that this additional information can be received by your Onkyo AVR and can be sent to other devices that are connected in your home theater system, with no interruption.

THX Loudness Plus

THX Loudness Plus is a new volume control technology featured in THX Ultra2 Plus™ and THX Select2 Plus™ Certified receivers. With THX Loudness Plus, home theater audiences can now experience the rich details in a surround mix at any volume level. A consequence of turning the volume below Reference Level is that certain sound elements can be lost or perceived differently by the listener. THX Loudness Plus compensates for the tonal and spatial shifts that occur when the volume is reduced by intelligently adjusting ambient surround channel levels and frequency response. This enables users experience the true impact of soundtracks regardless of the volume setting. THX Loudness Plus is automatically applied when listening in any THX listening mode. The new THX Cinema, THX Music, and THX Games modes are tailored to apply the proper THX Loudness Plus settings for each type of content.

Digital Processing Crossover Network

Digital Crossover provides a separate routing system by splitting the audio signal into separate frequency bands optimized for each speaker driver. It provides a fine, three-dimensional sound field that extend each driver's performance to the uppermost. With its built-in time alignment function, this system also adjusts the sound shifting that occurs when there is a physical offset between sound drivers. At a digital processing level, it corrects this offset by delaying the related audio signal.

Although this function is meant for speakers without crossover network, it can also be used with bi-amped speakers.

In this case, set the crossover network on the AV receiver as the speakers' built-in network frequency is not used.

Tip

- This setting can be done while listening to an audio source.
- Press **MODE/D** (Blue) to switch from the current audio source to test noises. Pressing **MODE/D** (Blue) again or the cursor buttons will stop the test noises and switch back to the original audio source.

Note

- This setting can only be made when "**Speakers Type (Front)**" is set to "**Digital Crossover**" (➔ page 59).

■ Crossover

▸"**250Hz**", "**320Hz**", "**400Hz**", "**500Hz**, "**630Hz**", "**800Hz**", "**1000Hz**", "**1250Hz**", "**1600Hz**", "**2000Hz**", "**2500Hz**", "**3200Hz**", "**4000Hz**", "**5000Hz**"

Output Band for Test

▸**High + Low**, **High**, **Low**:
Select the output for the audio signal.

Tip

- Pressing **MODE/D** (Blue) button plays band-limited test noises which center on the specified frequency.
- We recommend choosing a crossover value that creates no volume difference between "**High**" and "**Low**".

Note

- Refer to your speaker manual when setting without the use of test noises.

Cutoff frequencies of the woofers' low-pass filter (LPF) and the tweeters' high-pass filter (HPF) are set according to the frequency specified for "**Crossover**".

■ Overlap

▸**No**
▸**Yes**

With this setting, a frequency band near the specified crossover frequency is output by both tweeters and woofers. Based on the frequency selected for "**Crossover**", the cutoff frequency of the low-pass filter (LPF) will be set to 1/3 octave up and that of the high-pass filter (HPF) to 1/3 octave down. Example: With a "**Crossover**" of "**3200Hz**", the cutoff frequency of the woofers' LPF will be "**4000Hz**", and the tweeters' HPF will be "**2500Hz**".

Tip

- Sounds processed by Digital Processing Crossover Network are played.
- You can switch from the current audio source to test noises by pressing **MODE/D** (Blue).

■ High Level, Low Level

▸**–6.0dB** to **0.0dB** to **+6.0dB** in 0.5 dB steps

With this setting, you can set the volume of tweeters and woofers.

Tip

- Sounds processed by Digital Processing Crossover Network are played.
- You can switch from the current audio source to test noises by pressing **MODE/D** (Blue).

■ High Phase, Low Phase

▸**0°**
▸**180°**:

With this setting, you can adjust the phase of tweeters and woofers.

Tip

- Sounds processed by Digital Processing Crossover Network are played.
- You can switch from the current audio source to test noises by pressing **MODE/D** (Blue).

High Distance, Low Distance

▸ **0inch(0.0cm)** to **12inch(30.0cm)** in 1 inch(2.5 cm) steps

With this setting, you can adjust the virtual position of tweeter and woofer units. Adjusting "**High Distance**" virtually shifts woofers behind tweeters. Adjusting "**Low Distance**" virtually shifts tweeters behind woofers.

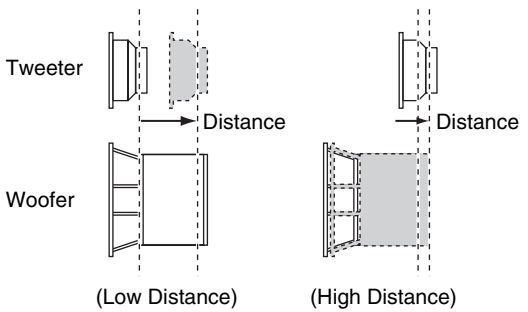

Tip

- Sounds processed by Digital Processing Crossover Network are played.
- You can switch from the current audio source to test noises by pressing **MODE/D** (Blue).

Audio Adjust

1 RECEIVER ► 2 HOME ► 3 ► 4 "Setup" ► 5

Main Menu | Audio Adjust

With the Audio Adjust functions and settings, you can adjust the sound and listening modes as you like.

Multiplex/Mono

Multiplex

Input Channel

▸ **Main**
▸ **Sub**
▸ **Main/Sub**

This setting determines which channel of a stereo multiplex source is output. Use it to select audio channels or languages with multiplex sources, multilingual TV broadcasts, and so on.

Mono

Input Channel

▸ **Left + Right**
▸ **Left**
▸ **Right**

This setting specifies the channel to be used for playing any 2-channel digital source such as Dolby Digital, or 2-channel analog/PCM source in the Mono listening mode.

Output Speaker

▸ **Center**:
Mono audio is output by the center speaker.
▸ **Left / Right**:
Mono audio is output by the front left and right speakers.

This setting determines which speakers output mono audio when the Mono listening mode is selected.

Note

- If the "**Center**" setting is set to "**None**" (➔ page 60), this setting cannot be selected.

Dolby

PL IIx Music (2ch Input)

These settings apply to only 2-channel stereo sources.

If you're not using any surround back speakers, these settings apply to Dolby Pro Logic II, not Dolby Pro Logic IIx.

Panorama

▸ **On**
▸ **Off**

With this setting, you can broaden the width of the front stereo image when using the Dolby Pro Logic IIx Music listening mode.

Dimension

▸ **–3** to **0** to **+3**

With this setting, you can move the sound field forward or backward when using the Dolby Pro Logic IIx Music listening mode. Higher settings move the sound field backward. Lower settings move it forward.

If the stereo image feels too wide, or there's too much surround sound, move the sound field forward to improve the balance. Conversely, if the stereo image feels like it's in mono, or there's not enough surround sound, move it backward.

Center Width

▸**0** to **3** to **7**

With this setting, you can adjust the width of the sound from the center speaker when using the Dolby Pro Logic IIx Music listening mode. Normally, if you're using a center speaker, the center channel sound is output from only the center speaker. (If you're not using a center speaker, the center channel sound will be distributed to the front left and right speakers to create a phantom center). This setting controls the front left, right, and center mix, allowing you to adjust the weight of the center channel sound.

■ PL IIz Height Gain

▸**Low**
▸**Mid**
▸**High**

The Height Gain Control in Dolby Pro Logic IIz enables the listener to select how much gain is applied to the front high speakers. There are three settings, "**Low**", "**Mid**" and "**High**", and the front high speakers are accentuated in that order. While "**Mid**" is the default listening setting, the listener may adjust the Height Gain Control to their personal preference.

Note

- If the "**Front High**" setting is set to "**None**" (➔ page 60), this setting cannot be selected.
- If the "**Powered Zone 2**" setting is set to "**Yes**" and Zone 2 is turned on, this setting cannot be selected.

■ Dolby EX

▸**Auto**:
If the source signal contains a Dolby EX flag, the Dolby EX or THX Surround EX listening mode is used.
▸**Manual**:
You can select any available listening mode.

This setting determines how Dolby EX encoded signals are handled. This setting is unavailable if no surround back speakers are connected. This setting is effective with Dolby Digital, Dolby Digital Plus and Dolby TrueHD only.

Note

- If the "**Surround Back**" setting is set to "**None**" (➔ page 60), this setting cannot be selected.
- If the "**Powered Zone 2/3**" setting is set to "**Yes**" and Zone 2/3 is turned on, this setting cannot be selected.

■ TrueHD Loudness Management

▸**Off**
▸**On**

This setting specifies whether or not to apply the Late Night processing on a Dolby TrueHD source.

Note

- When this setting is set to "**Off**", the Late Night function for Dolby TrueHD sources is automatically fixed to "**Off**".
- When this setting is set to "**Off**", the Dialogue Normalization information is not available for Dolby TrueHD sources.

■ Dolby Volume

▸**Off**
▸**On**

Dolby Volume automatically adjusts the difference in volume levels which can occur between different contents or source components, freeing the user from having to make volume adjustments. Also, by adjusting the frequency balance according to the playback volume, it recreates the original source audio. Dolby Volume therefore provides comfortable listening, effectively controlling the volume level difference without unnatural changes in volume or sound quality to recreate the balance and nuance of the source audio.

Note

- When the "**Dolby Volume**" setting is set to "**On**", "**Dynamic EQ**" and "**Dynamic Volume**" will be set to "**Off**".
- If you would like to use **Dolby Volume** in THX listening modes, set the "**Loudness Plus**" and "**Preserve THX Settings**" settings to "**Off**" and "**No**", respectively.
- When "**Dolby Volume**" is set to "**On**", the Late Night function cannot be set.

■ Volume Leveler

▸**Off**
▸**Low**:
Low Compression Mode activated.
▸**Mid**:
Medium Compression Mode activated.
▸**High**:
High Compression Mode activated. This setting affects volume the most, causing all sounds to be of equal loudness.

"**Volume Leveler**" maintains the perceived loudness of all contents, coming from different channels or input sources.

Note

- If the "**Dolby Volume**" setting is set to "**Off**", this setting cannot be selected.

■ Half Mode

▸**Off**
▸**On**

The Half Mode parameter turns Dolby Volume Half Mode processing on and off.

In off mode, Dolby Volume applies a bass and treble attenuation to the audio when the system gain exceeds reference level. This enables a more perceptually flat listening experience as human ears are more sensitive to bass and treble at higher levels. Some listeners however, prefer to have more bass and treble performance at higher gain levels.

Note

- If the "**Dolby Volume**" setting is set to "**Off**", this setting cannot be selected.
- During Half Mode on playback, Dolby Volume does not apply a bass and treble attenuation when the system volume exceeds reference level, thereby boosting perception of high and low frequencies.

Dialogue Normalization

Dialogue Normalization (DialogNorm) is a feature of Dolby Digital, which is used to keep the programs at the same average listening level so the user does not have to change the volume control between Dolby Digital, Dolby Digital Plus and Dolby TrueHD programs. When playing back software which has been encoded in Dolby Digital, Dolby Digital Plus and Dolby TrueHD, sometimes you may see a brief message in the front panel display which will read "**DialogNorm: X dB**" (X being a numeric value). The display is showing how the program level relates with THX calibration level. If you want to play the program at calibrated theatrical levels, you may wish to adjust the volume. For example, if you see the following message: "**DialogNorm: + 4 dB**" in the front panel display, to keep the overall output level at THX calibrated loudness, just turn down the volume control by 4 dB. However, unlike a movie theater where the playback loudness is preset, you can choose your preferred volume setting for best enjoyment.

DTS

■ Neo:X Music

Center Image

▸ **0** to **2** to **5**

The DTS Neo:X Music listening mode creates 9-channel surround sound from 2-channel stereo sources. With this setting, you can specify by how much the front left and right channel output is attenuated in order to create the center channel.

Changing the value from "0" to "5" will spread the sound of the center channel to left and right (outwards).

Audyssey DSX®

■ Soundstage

▸ **–3dB** to **Reference** to **+3dB**

With this setting, you can adjust the sound stage when using Audyssey DSX.

Note

- This listening mode can be selected only when all the following conditions are satisfied:
  – The center speaker is connected.
  – Either the front high or front wide speakers are connected.
  – Powered Zone 2 is not in use.

Theater-Dimensional

■ Listening Angle

▸ **Wide**:
Select if the listening angle is greater than 30 degrees.

▸ **Narrow**:
Select if the listening angle is less than 30 degrees.

With this setting, you can optimize the Theater-Dimensional listening mode by specifying the angle of the front left and right speakers relative to the listening position. Ideally, the front left and right speakers should be equidistant from the listening position and at an angle close to one of the two available settings.

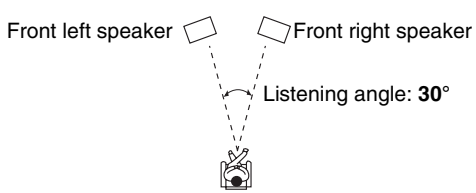

Note

- For best results, we recommend setting "**Narrow**" to 20° and "**Wide**" to 40°.

LFE Level

■ Dolby Digital*1, DTS*2, Multich PCM, Dolby TrueHD, DTS-HD Master Audio, DSD*3

▸ **–∞dB**, **–20dB**, **–10dB**, or **0dB**

With these settings, you can set the level of the LFE (Low Frequency Effects) channel individually for each input sources.

If you find that low-frequency effects are too loud when using one of these sources, change the setting to –20 dB or –∞ dB.

*1 Dolby Digital and Dolby Digital Plus sources
*2 DTS and DTS-HD High Resolution sources
*3 DSD (Super Audio CD) sources

Sound Program Edit

■ Sound Program

▸ **Stereo Source 1**, **Stereo Source 2**, **Stereo Source 3**, **Multich Source 1**, **Multich Source 2**, **Multich Source 3**

When playing back different content types on the same source, or when listening to a single content type on different sources, you can pre-register the settings that best suit each content in "**Sound Program**". The registered settings can then be called up and modified in one set. Use "**Sound Program Edit**" to register and modify a combination of settings.

Tip

- To select the registered settings, see "**Sound Program**" (➔ page 52).

■ Listening Mode

You can assign a default listening mode that will be selected automatically when you select the sound program. The "**Last Valid**" option means that the listening mode selected last will be used.

↳ To be continued

The "**Straight Decode**" option means that straight decoding listening mode (Dolby Digital, DTS, etc.) is selected.

■ Subwoofer

▸**No**, **Yes**

You can choose whether or not to use the subwoofer with the sound program.

■ Music Optimizer*1

▸**Off**, **On**

See "Music Optimizer" (➔ page 53).

■ Equalizer*1

▸**Off**

▸**Manual**:

The manual setting in "Equalizer Settings" (➔ page 62) is applied.

■ Audyssey*1

▸**Off**, **Movie**, **Music**

See "Audyssey" (➔ page 53).

■ Dynamic EQ*1*2

▸**Off**, **On**

See "Dynamic EQ" (➔ page 53).

■ Dynamic Volume*1*2

▸**Off**, **Light**, **Medium**, **Heavy**

See "Dynamic Volume" (➔ page 53).

■ Dolby Volume*1

▸**Off**, **On**

See "Dolby Volume" (➔ page 53).

Note

- You cannot select the "**Subwoofer**" setting if you set it to "**No**" in "**Speaker Configuration**".
- "**Music Optimizer**" is only available when "**Stereo Source 1**", "**Stereo Source 2**" or "**Stereo Source 3**" is selected.
- When "**Audyssey Quick Start**" has been used for measurement, the "**Audyssey**"setting cannot be selected.

*1 This setting cannot be used when the "**Listening Mode**" setting is set to "**Pure Audio**" or "**Direct**".

*2 To enable this setting, you must first perform the Room Correction and Speaker Setup.

Source Setup

1 RECEIVER ➤ 2 HOME ➤ 3 ➤ 4 "Setup" ➤ 5

Main Menu > Source Setup

Items can be set individually for each input selector.

Preparation

Press the input selector buttons to select an input source.

Audyssey®

The tone for each speaker is set automatically by Audyssey MultEQ® XT32 Room Correction and Speaker Setup. To enable the following settings, you must first perform the Room Correction and Speaker Setup (➔ page 37).

- These technologies cannot be used when:
  - –a pair of headphones is connected, or
  - –either Pure Audio or Direct listening mode is selected.

■ Audyssey

▸**Off**

▸**Movie**:

Select this setting for movie material.

The **Audyssey** indicator will light.

▸**Music**:

Select this setting for music material.

The **Audyssey** indicator will light.

Note

- When "**Audyssey Quick Start**" has been used for measurement, "**Audyssey**" cannot be selected.
- Audyssey equalizing does not work with DSD sources.

■ Dynamic EQ

▸**Off**

▸**On**:

Audyssey Dynamic EQ® becomes active.

The **Dynamic EQ** indicator will light.

With Audyssey Dynamic EQ, you can enjoy great sound even when listening at low volume levels.

Audyssey Dynamic EQ solves the problem of deteriorating sound quality as volume is decreased by taking into account human perception and room acoustics. It does so by selecting the correct frequency response and surround volume levels moment-by-moment so that the content sounds the way it was created at any volume level — not just at reference level.

■ Reference Level

Audyssey Dynamic EQ Reference Level Offset

▸**0dB**:

This should be selected for movie contents.

▸**5dB**:

Select this setting for content that has a very wide dynamic range, such as classical music.

▸**10dB**:

Select this setting for jazz or other music that has a wider dynamic range. This setting should also be selected for TV content as that is usually mixed at 10 dB below film reference.

▸**15dB**:

Select this setting for pop/rock music or other program material that is mixed at very high listening levels and has a compressed dynamic range.

↳To be continued

Movies are mixed in rooms calibrated for film reference. To achieve the same reference level in a home theater system each speaker level must be adjusted so that –30 dBFS band-limited (500 Hz to 2000 Hz) pink noise produces 75 dB sound pressure level at the listening position. A home theater system automatically calibrated by Audyssey MultEQ® XT32 will play at reference level when the master volume control is set to the 0 dB position. At that level you can hear the mix as the mixers heard it. Audyssey Dynamic EQ® is referenced to the standard film mix level. It makes adjustments to maintain the reference response and surround envelopment when the volume is turned down from 0 dB. However, film reference level is not always used in music or other non-film content. Audyssey Dynamic EQ Reference Level Offset provides three offsets from the film level reference (5 dB, 10 dB, and 15 dB) that can be selected when the mix level of the content is not within the standard.

Note

- If "**Dynamic EQ**" setting is set to "**Off**", this technology cannot be used.

■ Dynamic Volume

- **Off**
- **Light**:
  Activates Light Compression Mode.
- **Medium**:
  Activates Medium Compression Mode.
- **Heavy**:
  Activates Heavy Compression Mode. This setting affects volume the most. It quiets the loud parts, such as explosions, and boosts the quiet parts so they can be heard.

Note

- If you want to use Audyssey Dynamic EQ or Audyssey Dynamic Volume® with THX listening modes, set the "**Loudness Plus**" setting to "**Off**" and set "**Preserve THX Settings**" to "**No**" (➔ page 62).
- If you make Dynamic Volume active, "**Dynamic EQ**" is set to "**On**". The **Dynamic Vol** indicator will light.
- When "**Dynamic EQ**" is set to "**Off**", "**Dynamic Volume**" is automatically switched to "**Off**".

About Audyssey Dynamic EQ®

Audyssey Dynamic EQ solves the problem of deteriorating sound quality as volume is decreased by taking into account human perception and room acoustics. Dynamic EQ selects the correct frequency response and surround levels moment-by-moment at any user-selected volume setting. The result is bass response, tonal balance and surround impression that remain constant despite changes in volume. Dynamic EQ combines information from incoming source levels with actual output sound levels in the room, a prerequisite for delivering a loudness correction solution.

About Audyssey Dynamic Volume®

Audyssey Dynamic Volume solves the problem of large variations in volume level between television programs, commercials, and between the soft and loud passages of movies. Dynamic Volume looks at the preferred volume setting by the user and then monitors how the volume of program material is being perceived by listeners in real time to decide whether an adjustment is needed. Whenever necessary, Dynamic Volume makes the necessary rapid or gradual adjustments to maintain the desired playback volume level while optimizing the dynamic range. Audyssey Dynamic EQ is integrated into Dynamic Volume so that as the playback volume is adjusted automatically, the perceived bass response, tonal balance, surround impression and dialog clarity remain the same whether watching movies, flipping between television channels or changing from stereo to surround sound content.

IntelliVolume

■ IntelliVolume

▸**–12dB** to **0dB** to **+12dB** in 1 dB steps.

With IntelliVolume, you can set the input level for each input selector individually. This is useful if one of your source components is louder or quieter than the others.

Use ◄/► to set the level.

If a component is noticeably louder than the others, use ◄ to reduce its input level. If it's noticeably quieter, use ► to increase its input level.

Note

- IntelliVolume does not work for Zone 2/3.

A/V Sync

■ A/V Sync

▸**0msec** to **800msec** in 5 msec steps

When using progressive scanning on your Blu-ray Disc/DVD player, you may find that the picture and sound are out of sync. With this setting, you can correct this by delaying the audio signals.

To view the TV picture while setting the delay, press **ENTER**.

To return to the previous screen, press **RETURN**.

The range of values you can adjust will depend on whether your TV or display supports HDMI Lip Sync and if the "**Lip Sync**" setting is set to "**On**" or not (➔ page 76).

Note

- A/V Sync is disabled when the Pure Audio or Direct listening mode is used with an analog input source.
- This setting cannot be used with the **NET** input selector.

Name Edit

You can enter a custom name for each individual input selector and radio preset for easy identification. When entered, the custom name will appear on the display. The custom name is edited using the keyboard screen.

■ Name

1 **Use ▲/▼/◄/► to select a character, and then press ENTER.**
Repeat this step to enter up to 10 characters.

2 **To store a name when you're done, be sure to select "OK" by using ▲/▼/◄/►, and then press ENTER.**

Name input area

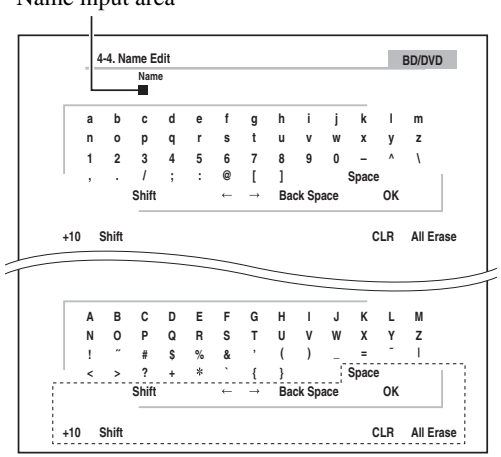

Space:
Enters a space character.

Shift[*1]:
Toggles between lower and upper case characters.

← (Left)/ → (Right):
Moves the cursor left or right in the Name input area.

Back Space[*2]:
Moves the cursor backward and deletes one character.

OK:
Confirms your entry.

Tip

*1 This can also be performed by using **+10** on the remote controller.

*2 Press **CLR** on the remote controller to delete all the characters you have input.

Tip

- To name a radio preset, use **TUNER** to select **AM** or **FM**, and then select the preset (➔ page 34).
- To restore a name to its default, erase all characters with **CLR**, select "**OK**" and then press **ENTER**.

Note

- This setting cannot be used for the **NET** and **USB** input selectors.

Picture Adjust

Using Picture Adjust, you can adjust the picture quality and reduce any noise appearing on the screen.
To view the TV picture while setting, press **ENTER**. To return to the previous screen, press **RETURN**.

■ Wide Mode[*1*2]

This setting determines the aspect ratio.

▸ **4:3**:

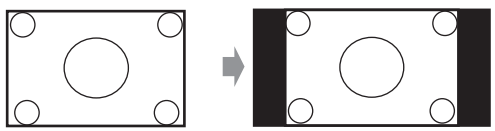

▸ **Full**:

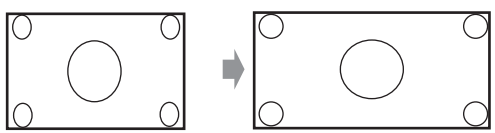

▸ **Zoom**:

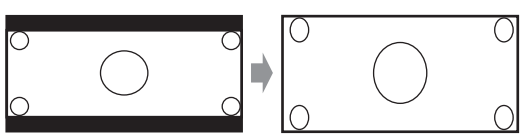

▸ **Wide Zoom**:

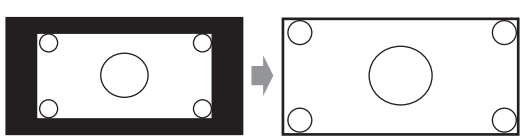

▸ **Auto**:
According to the input signals and monitor output setting, the AV receiver automatically selects the "**4:3**", "**Full**", "**Zoom**" or "**Wide Zoom**" mode. See "Monitor Out" for details on the monitor output setting (➔ page 57).

Picture Mode*1*3

- **Custom**:
  All settings can be performed manually.
- **ISF Day**:
  Select when the room is bright.
- **ISF Night**:
  Select when the room is dark.
- **Cinema**:
  Select when the picture source is a movie or alike.
- **Game**:
  Select when the video source is a game console.
- **Streaming**:
  Attempts to reduce the mosquito noise and block artifact effects.
- **Through**:
  Does not adjust picture quality (changes resolution).
- **Direct**:
  Does not adjust picture quality (does not change resolution). The video coming from an analog input and output by the HDMI output is processed in the same way as "**Through**".

With "**Picture Mode**", you can change the following settings to be suitable for the movie or game screen by one operation; "**Game Mode**", "**Film Mode**", "**Edge Enhancement**", "**Noise Reduction**", "**Mosquito NR**", "**Random NR**", "**Block NR**", "**Resolution**", "**Brightness**", "**Contrast**", "**Hue**", "**Saturation**", "**Color Temperature**", "**Gamma**", "**Red Brightness**", "**Red Contrast**", "**Green Brightness**", "**Green Contrast**", "**Blue Brightness**" or "**Blue Contrast**".

The receiver has been designed to incorporate setup and calibration standards established by the Imaging Science Foundation (ISF). The ISF has developed carefully crafted, industry-recognized standards for optimal video performance and has implemented a training program for technicians and installers to use these standards to obtain optimal picture quality from the receiver. Accordingly, Onkyo recommends that setup and calibration be performed by an ISF Certified installation technician.

Game Mode*4*5*6

- **Off**
- **On**

If video signal delay occurs during playback on a video component (i.e., game console), select the corresponding input source and set the "**Game Mode**" setting to "**On**". The delay will decrease but in return the picture quality will become poor.

Film Mode*4*6

- **Video**:
  "**Film Mode**" detection is not applied and the input signal is handled as a video source.
- **Auto**:
  Detects whether the input signal is a video or a movie. If it is a movie, the appropriate conversion is applied.

The AV receiver will adjust to the picture source, automatically converting it to the appropriate progressive signal and reproducing the natural quality of the original picture.

Edge Enhancement*4*6

- **Off**
- **Low**
- **Mid**
- **High**

With this setting, you can make the picture appear sharper.

Noise Reduction*4*6

- **Off**
- **Low**
- **Mid**
- **High**

With this setting, you can reduce noise appearing on the screen. Select the desired level.

Mosquito NR*4*6*7

- **Off**
- **Low**
- **Mid**
- **High**

With Mosquito Noise Reduction, you can remove the shimmering or haziness that sometimes appears around objects in the picture. Mosquito noise can be an issue with overly compressed MPEG content.

Random NR*4*6*7

- **Off**
- **Low**
- **Mid**
- **High**

With Random Noise Reduction, you can remove indiscriminate picture noise, such as film grain.

Block NR*4*6*7

- **Off**
- **Low**
- **Mid**
- **High**

With Block Noise Reduction, you can remove the block distortion that sometimes appears in the picture. Block noise can be an issue with overly compressed MPEG content.

Resolution*4*6*8

- **Through**:
  Select this to pass video through the AV receiver at the same resolution and with no conversion.
- **Auto**:
  Select this to have the AV receiver automatically convert video at resolutions supported by your TV.
- **480p** (**480p/576p**), **720p**, **1080i**, **1080p**:
  Select the desired output resolution.
- **1080p/24**:
  Select this for 1080p output at 24 frames per second.
- **4K Upscaling**:
  Select this for an output resolution four times that of 1080p. Depending on the resolution supported by your TV, it will result in either 3840 × 2160 or 4096 × 2160 pixels.

You can specify the output resolution for the HDMI output and have the AV receiver upconvert the picture resolution as necessary to match the resolution supported by your TV.
This setting is available only when "**Source**" has been selected in "**Resolution**" of the "**Monitor Out**" setting (➔ page 57).

Brightness*1*4*6

- **–50** to **0** to **+50**

With this setting, you can adjust the picture brightness. "**–50**" is the darkest. "**+50**" is the brightest.

Contrast*1*4*6

- **–50** to **0** to **+50**

With this setting, you can adjust contrast. "**–50**" is the least. "**+50**" is the greatest.

Hue*1*4*6

- **–50** to **0** to **+50**

With this setting, you can adjust the color hue between "**–50**" and "**+50**".

Saturation*1*4*6

- **–50** to **0** to **+50**

With this setting, you can adjust saturation. "**–50**" is the weakest color. "**+50**" is the strongest color.

Color Temperature*4*6

- **Warm**
- **Normal**
- **Cool**

With this setting, you can adjust the color temperature.

Gamma*4*6

- **–3** to **0** to **+3**

With this setting, you can adjust the incoming picture's R (red), G (green), and B (blue) color signal in relation to the output color signal.

Red Brightness*4*6

- **–50** to **0** to **+50**

With this setting you can adjust the brightness of red color. "**–50**" is the darkest. "**+50**" is the brightest.

Red Contrast*4*6

- **–50** to **0** to **+50**

With this setting you can adjust the contrast of red color. "**–50**" is the least. "**+50**" is the greatest.

Green Brightness*4*6

- **–50** to **0** to **+50**

With this setting you can adjust the brightness of green color. "**–50**" is the darkest. "**+50**" is the brightest.

Green Contrast*4*6

- **–50** to **0** to **+50**

With this setting you can adjust the contrast of green color. "**–50**" is the least. "**+50**" is the greatest.

Blue Brightness*4*6

- **–50** to **0** to **+50**

With this setting you can adjust the brightness of blue color. "**–50**" is the darkest. "**+50**" is the brightest.

Blue Contrast*4*6

- **–50** to **0** to **+50**

With this setting you can adjust the contrast of blue color. "**–50**" is the least. "**+50**" is the greatest.

Note

- "**Picture Adjust**" cannot be used when:
  – The **NET** input selector is selected, or
  – "**Monitor Out**" is set to "**Sub**" (➔ pages 57).

*1 This procedure can also be performed on the remote controller by using the Quick Setup (➔ page 51).
*2 When a 3D video source is input, "**Wide Mode**" is fixed to "**Full**".
*3 When "**Metadata Compatible**" is enabled (➔ page 62), "**Picture Mode**" is fixed to "**Direct**".
*4 When the "**Picture Mode**" setting is set to anything other than "**Custom**", this setting cannot be used.
*5 If the "**Resolution**" setting is set to "**4K Upscaling**" (➔ pages 57, 71), this setting is fixed at "**Off**".
*6 Press **CLR** if you want to reset to the default value.
*7 When the "**Noise Reduction**" setting is set to anything other than "**Off**", this setting cannot be selected.
*8 With some TVs, there may be no picture when this setting is set to "**4K Upscaling**".

Audio Selector

■ Audio Selector

▸**ARC**:
The audio signal from your TV tuner can be sent to **HDMI OUT MAIN** of the AV receiver.*1
With this selection, the TV's audio can be automatically selected as a priority among other assignments.

▸**HDMI**:
This can be selected when **HDMI IN** has been assigned as an input source. If both HDMI (**HDMI IN**) and digital audio inputs (**COAXIAL IN** or **OPTICAL IN**) have been assigned, HDMI input is automatically selected as a priority.

▸**COAXIAL**:
This can be selected when **COAXIAL IN** has been assigned as an input source. If both coaxial and HDMI inputs have been assigned, coaxial input is automatically selected as a priority.

▸**OPTICAL**:
This can be selected when **OPTICAL IN** has been assigned as an input source. If both optical and HDMI inputs have been assigned, optical input is automatically selected as a priority.

▸**Analog**:
The AV receiver always outputs analog signals.

You can set priorities of audio output when there are both digital and analog inputs.

Note

- This setting can be made only for an input source that is assigned to **HDMI IN**, **COAXIAL IN**, or **OPTICAL IN**.
- This setting cannot be used with the **NET** and **USB** input selectors.
- When using the Whole House Mode, "**Audio Selector**" is fixed to "**Analog**".
- With the **GAME2** input selector, "**Analog**" cannot be used.

*1 You can select "**ARC**" if you select the **TV/CD** input selector. But you cannot if you've selected "**Off**" in the "**Audio Return Channel**" setting (➔ page 76).

Setting the Incoming Digital Signal (Fixed Mode)

■ Fixed Mode

▸**Off**:
The format is detected automatically. If no digital input signal is present, the corresponding analog input is used instead.

▸**PCM**:
Only 2-channel PCM format input signals will be heard. If the input signal is not PCM, the **PCM** indicator will flash and noise may also be produced.

▸**DTS**:
Only DTS (but not DTS-HD) format input signals will be heard. If the input signal is not DTS, the **dts** indicator will flash and there will be no sound.

When "**HDMI**", "**COAXIAL**" or "**OPTICAL**" is selected in the "**Audio Selector**" setting, you can then specify the signal type in "**Fixed Mode**".

Normally, the AV receiver detects the signal format automatically. However, if you experience either of the following issues when playing PCM or DTS material, you can manually set the signal format to PCM or DTS.

- If the beginnings of tracks from a PCM source are cut off, try setting the format to PCM.
- If noise is produced when fast forwarding or reversing a DTS CD, try setting the format to DTS.

Note

- The setting will be reset to "**Off**" when you change the setting in "**Audio Selector**".

Listening Mode Preset

1 RECEIVER ► 2 HOME ► 3 ► 4 "Setup" ► 5 ENTER

Main Menu **Listening Mode Preset**

You can assign a default listening mode to each input source that will be selected automatically when you select each input source. For example, you can set the default listening mode to be used with Dolby Digital input signals. You can select other listening modes during playback, but the mode specified here will be resumed once the AV receiver has been set to standby.

1 Use ▲/▼ to select the input source that you want to set, and then press ENTER.
The following menu appears.

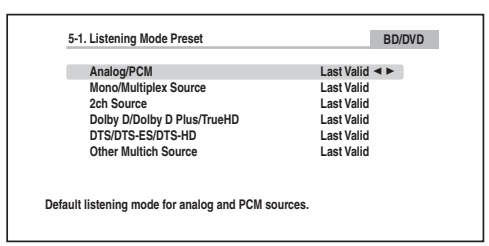

↳ To be continued

2 Use ▲/▼ to select the signal format that you want to set, and then use ◄/► to select a listening mode.

Only listening modes that can be used with each input signal format can be selected (➔ pages 40 to 46).

The "**Last Valid**" option means that the listening mode selected last will be used.

The "**Straight Decode**" option means that straight decoding listening mode (Dolby Digital, DTS, etc.) is selected.

Note

- For the "**TUNER**" input selector, only "**Analog**" will be available.
- For the "**NET**" or "**USB**" input selector, only "**Digital**" will be available.

■ Analog/PCM/Digital

With this setting, you can specify the listening mode used when an analog (CD, TV, LD, VHS, MD, turntable, radio, cassette, cable, satellite, etc.) or PCM digital (CD, DVD, etc.) audio signal is played.

Note

- For the "**GAME2**" input selector, only "**PCM**" is available.

■ Mono/Multiplex Source

With this setting, you can specify the listening mode used when a mono digital audio signal is played (DVD, etc.).

■ 2ch Source

With this setting, you can specify the listening mode used when 2-channel (2/0) stereo digital sources, such as Dolby Digital or DTS, are played.

■ Dolby D/Dolby D Plus/TrueHD

With this setting, you can specify the listening mode used when Dolby Digital or Dolby Digital Plus format digital audio signals are played (DVD, etc.). Specifies the default listening mode for Dolby TrueHD sources, such as Blu-ray or HD DVD (input via HDMI).

■ DTS/DTS-ES/DTS-HD

With this setting, you can specify the listening mode used when DTS or DTS-HD High Resolution format digital audio signals are played (DVD, LD, CD, etc.). Specifies the default listening mode for DTS-HD Master Audio sources, such as Blu-ray or HD DVD (input via HDMI).

■ Other Multich Source

Specifies the default listening mode for multichannel PCM sources from **HDMI IN** such as DVD-Audio, and DSD multichannel sources such as Super Audio CD.

Miscellaneous

1 RECEIVER ► 2 HOME ► 3 ► 4 "Setup" ► 5 ENTER

Main Menu | Miscellaneous

Volume Setup

■ Volume Display

- **Absolute**:
  Displayed range is **Min**, **0.5** to **99.5**, **Max**.
- **Relative(THX)**:
  Displayed range is **–∞dB**, **–81.5dB** to **+18.0dB**.

With this setting, you can choose how the volume level is displayed.

The absolute value 82 is equivalent to the relative value 0 dB.

Note

- If the absolute value is set to 82, "**82.0Ref**" will appear on the display and the **THX** indicator will flash.

■ Muting Level

- **–∞dB** (fully muted), **–50dB** to **–10dB** in 10 dB steps.

This setting determines how much the output is muted when the muting function is used (➔ page 49).

■ Maximum Volume

- **Off**, **50** to **99** (Absolute display)
- **Off**, **–32dB** to **+17dB** (Relative display)

With this setting, you can limit the maximum volume.

To disable this setting, select "**Off**".

■ Power On Volume

▸ **Last**, **Min**, **1** to **99** or **Max** (Absolute display)

▸ **Last**, **–∞dB**, **–81dB** to **+18dB** (Relative display)

With this preference, you can specify the volume setting to be used each time the AV receiver is turned on.

To use the same volume level that was used when the AV receiver was turned off, select "**Last**".

The "**Power On Volume**" setting cannot be set higher than the "**Maximum Volume**" setting.

■ Headphone Level

▸ **–12dB** to **0dB** to **+12dB**

With this setting, you can specify the headphone volume relative to the main volume. This is useful if there's a volume difference between your speakers and your headphones.

OSD Setup

■ On Screen Display

▸ **On**

▸ **Off**

This preference determines whether operation details are displayed on-screen when an AV receiver function is adjusted.

Even when "**On**" is selected, operation details may not be output if the input source is connected to an **HDMI IN**.

■ Language

(North American models)

▸ **English**, **Deutsch, Français, Español, Italiano, Nederlands, Svenska**

(European, Australian and Asian models)

▸ **English**, **Deutsch, Français, Español, Italiano, Nederlands, Svenska, 中文**

This setting determines the language used for the on-screen menus.

■ Screen Saver

▸ **3min, 5min, 10min**

▸ **Off**

With this setting, you can set the time until the screen saver activates itself. Once active, the screen saver will go off and the screen will return to its previous state if the AV receiver is operated in any way.

Hardware Setup

1 RECEIVER ► 2 HOME ► 3 ► 4 "Setup" ► 5 ENTER

Main Menu > Hardware Setup

Tuner

■ AM/FM Frequency Step (North American models)

▸ **10kHz/200kHz**:

▸ **9kHz/50kHz**:

Select the frequency step according to your area.

■ AM Frequency Step (European, Australian and Asian models)

▸ **10kHz**:

▸ **9kHz**:

Select the frequency step according to your area.

For AM/FM tuning to work properly, you must specify the AM/FM frequency step used in your area.

Note

• When this setting is changed, all radio presets will be deleted.

HDMI

HDMI Control(RIHD)

- **Off**
- **On**

Turn this setting on to allow RIHD-compatible components connected via HDMI to be controlled by the AV receiver (➔ page 104).

Note

- When the setting is set to "**On**" and the menu is closed, the names of connected RIHD-compatible components and "**RIHD On**" are displayed on the AV receiver.
  "**Search…**" → "**(name)**" → "**RIHD On**"
  When the AV receiver cannot receive the name of the component, it is displayed as "**Player***" or "**Recorder***", etc. ("*" shows up and indicates the number of components, when two or more are received).
- When an RIHD-compatible component is connected to the AV receiver via an HDMI cable, the name of the connected component is displayed on the AV receiver display. For example, while you are watching TV broadcasting, if you operate a Blu-ray Disc/DVD player (being powered on) with the remote control of the AV receiver, the name of the Blu-ray Disc/DVD player will be displayed on the AV receiver.
- Set it to "**Off**" when a connected piece of equipment is not compatible or it is unclear whether the equipment is compatible or not.
- If operation is not normal when set to "**On**", change the setting to "**Off**".
- Refer to the connected component's instruction manual for details.
- When the "**HDMI Control(RIHD)**" setting is set to "**On**", the power consumption on standby mode slightly increases. (Depending on the TV status, the AV receiver will enter standby mode as usual.)
- The RIHD control does not support **HDMI OUT SUB**. Use **HDMI OUT MAIN** instead.
- When the source equipment is connected with the RI connection, it may malfunction if "**HDMI Control(RIHD)**" is set to "**On**".

HDMI Through

- **Off**
- **BD/DVD**, **CBL/SAT**, **STB/DVR**, **GAME1**, **GAME2**, **PC**, **AUX**, **TV/CD**, **PHONO**:
  Selects the input source for which the HDMI Through function is enabled.
- **Last**:
  The HDMI Through function is activated on the input source selected at the time of setting the AV receiver to standby mode.

When enabling the HDMI Through function, regardless of whether the AV receiver is on or in standby, both audio and video streams from an HDMI input will be output to the TV or other components via HDMI connection. The **HDMI** indicator will be dimly-lit in standby mode. Note that the indicator may not light under certain conditions (➔ page 56).

This setting is fixed to "**Auto**" automatically when the above "**HDMI Control(RIHD)**" setting is set to "**On**", resulting in automatic input source selection.

Note

- Only an input source assigned to an **HDMI IN** via "**HDMI Input**" setting is enabled (➔ page 58).
- The power consumption in standby mode will increase during the HDMI Through function; however in the following cases, the power consumption can be saved:
  – The TV is in standby mode.
  – You are watching a TV program.
- Refer to the connected component's instruction manual for details.
- Depending on the connected component, the correct input source may not be selected with the setting fixed to "**Auto**".
- This setting is set to "**Off**" automatically when the "**HDMI Control(RIHD)**" setting is set to "**Off**".

Audio TV Out

- **Off**
- **On**

This preference determines whether the incoming audio signal is output from the HDMI output. You may want to turn this preference on if your TV is connected to the HDMI output and you want to listen to the audio from a connected component through your TV's speakers. Normally, this should be set to "**Off**".

Note

- If "**On**" is selected and the audio can be output from the TV, the AV receiver will output no sound through its speakers. In this case, "**TV Speaker**" appears on the AV receiver's display by pressing **DISPLAY**.
- When "**HDMI Control(RIHD)**" is set to "**On**", this setting is fixed to "**Auto**".
- When Digital Processing Crossover Network is being used, this setting is not available.
- With some TVs and input signals, no sound may be output even when this setting is set to "**On**".
- When "**Audio TV Out**" or "**HDMI Control(RIHD)**" is set to "**On**" and you're listening through your TV's speakers (➔ page 19), turning up the AV receiver's volume control will make the sound be output from the AV receiver's front left and right speakers. To stop the AV receiver's speakers producing sound, change the settings, change your TV's settings, or turn down the AV receiver's volume.
- Listening mode cannot be changed when this setting is set to "**On**" and the input source is not HDMI.

■ Audio Return Channel (ARC)

▸ **Off**

▸ **Auto**:
The audio signal from your TV tuner can be sent to **HDMI OUT MAIN** of the AV receiver.

The audio return channel (ARC) function allows an ARC capable TV to send the audio stream to **HDMI OUT MAIN** of the AV receiver. To use this function, you must select the **TV/CD** input selector and your TV must be ARC capable. Default setting: "**- - - -**"

Note

- This setting is fixed to "**- - - -**" when the "**HDMI Control(RIHD)**" setting is set to "**Off**".
- This setting is set to "**Auto**" automatically when the "**HDMI Control(RIHD)**" setting is set to "**On**" for the first time.
- If you set "**Audio Return Channel**" to "**Auto**", the "**Audio Selector**" settings of the **TV/CD** input selector will be automatically switched to "**ARC**" (➔ page 72).

After changing the settings of the "**HDMI Control(RIHD)**", "**HDMI Through**" or "**Audio Return Channel**", turn off the power on all connected pieces of equipment and then turn them on again. Refer to the user's manuals for all connected pieces of equipment.

■ Lip Sync

▸ **Off**

▸ **On**

This function allows the AV receiver to automatically correct any delay between the video and the audio, based on the data from the connected monitor.

Note

- This function works only if your HDMI-compatible TV supports HDMI Lip Sync.

■ InstaPrevue

These settings apply to "**InstaPrevue**" of the Home menu (➔ page 47) and specify the preview display of HDMI video streams.

Sub Window

▸ **Multi**:
Displays preview thumbnails all at once.

▸ **Single**:
Displays preview thumbnails one-by-one.

With this setting, you can set the number of preview thumbnails displayed.

Position

(with "**Sub Window**" set to "**Multi**")

▸ **Top**, **Bottom**, **Left**, **Right**

(with "**Sub Window**" set to "**Single**")

▸ **Upper Left**, **Upper Right**, **Lower Left**, **Lower Right**

With this setting, you can set the position of preview thumbnails on the TV screen.

Note

- Depending on video signals, the picture may not be properly rendered on the preview thumbnails of InstaPrevue.

Auto Standby

■ Auto Standby

▸ **Off**

▸ **On**

When "**Auto Standby**" is set to "**On**", the AV receiver will automatically enter standby mode if there is no operation for 30 minutes with no audio and no video signal input.

"**Auto Standby**" will appear on the AV receiver's display and OSD 30 seconds before the Auto Standby comes on.

Default setting: **On (European, Australian and Asian models)**, **Off (North American models)**

Note

- Set to "**On**", the Auto Standby function may activate itself during playback with some sources.
- The Auto Standby function does not work when Zone 2/3 is on.

Network

After modifying the network settings, you must confirm the changes by executing "**Save**".

This section explains how to configure the AV receiver's network settings manually.

If your router's DHCP server is enabled, you don't need to change any of these settings, as the AV receiver is set to use DHCP to configure itself automatically by default (i.e., DHCP is set to "**Enable**"). If, however, your router's DHCP server is disabled (you're for example using static IP), you'll need to configure these settings yourself, in which case, a knowledge of Ethernet networking is essential.

What's DHCP?

DHCP (Dynamic Host Configuration Protocol) is used by routers, computers, the AV receiver, and other devices to automatically configure themselves on a network.

What's DNS?

The DNS (Domain Name System) translates domain names into IP addresses. For example, when you enter a domain name such as *www.onkyousa.com* in your Web browser, before accessing the site, your browser uses DNS to translate this into an IP address, in this case 63.148.251.142.

■ MAC Address

This is the AV receiver's MAC (Media Access Control) address. This address cannot be changed.

■ DHCP

▸ **Enable**

▸ **Disable**

This setting determines whether or not the AV receiver uses DHCP to automatically configure its IP Address, Subnet Mask, Gateway, and DNS Server settings.

Note

- If you select "**Disable**", you must configure the "**IP Address**", "**Subnet Mask**", "**Gateway**", and "**DNS Server**" settings yourself.

■ IP Address

▸ Class A:
"**10.0.0.0**" to "**10.255.255.255**"

▸ Class B:
"**172.16.0.0**" to "**172.31.255.255**"

▸ Class C:
"**192.168.0.0**" to "**192.168.255.255**"

Enter a static IP address provided by your Internet Service Provider (ISP).

Most routers use Class C IP addresses.

■ Subnet Mask

Enter the subnet mask address provided by your ISP (typically **255.255.255.0**).

■ Gateway

Enter the gateway address provided by your ISP.

■ DNS Server

Enter the DNS server address provided by your ISP.

■ Proxy URL

To use a Web proxy, enter its URL here.

■ Proxy Port

If you're using a Web proxy, enter a proxy port number here.

■ Network Standby

▸ **On**

▸ **Off**

This setting enables or disables control over the network. When enabled, the **NET** indicator will be dimly-lit while the AV receiver is in standby mode. Note that the indicator may not light under certain conditions (➔ page 56).

Note

- When set to "**On**", the power consumption slightly increases in standby mode.

■ Update Notice

▸ **Enable**

▸ **Disable**

When this setting is enabled, you will be notified if a firmware update via network is available.

Note

- Selecting "**Never Remind me**" on the notification window will switch this setting to "**Disable**" (➔ page 23).
- For details on the update notification, see "If the "Firmware Update Available" window appears." (➔ page 23).

Initial Setup

If you skipped the initial setup wizard, for example on first-time use, you can reaccess it from here.

See "**Initial Setup**" (➔ page 24).

Remote Controller Setup

1 RECEIVER ► 2 HOME ► 3 ► 4 "Setup" ► 5

Main Menu ▸ Remote Controller Setup

Remote ID

■ Remote ID

▸ **1**, **2**, or **3**

When several Onkyo components are used in the same room, their remote ID codes may overlap. To differentiate the AV receiver from other components, you can change its remote ID from "**1**", to "**2**" or "**3**".

Note

- If you do change the AV receiver's remote ID, be sure to change the remote controller to the same ID (see below), otherwise, you won't be able to control it with the remote controller.

Changing the remote controller's ID

1 **While holding down RECEIVER, press and hold down Q SETUP until the RECEIVER lights (about 3 seconds).**

2 **Use the number buttons to enter ID 1, 2, or 3.** **RECEIVER** flashes twice.

Remote Mode Setup

See "Looking up for Remote Control Codes" (➔ page 84).

Lock Setup

1 RECEIVER ► 2 HOME ► 3 ► 4 "Setup" ► 5

Main Menu ▸ Lock Setup

With this preference, you can protect your settings by locking the setup menus.

■ Setup

▸ **Locked**

▸ **Unlocked**

When "**Locked**" is selected, the setup menus will be locked and you cannot change any setting.

Multi Zone

In addition to the main listening room, you can also enjoy playback in the other room, or as we call Multi Zone. And, you can select a different source for each room.

Making Multi Zone Connections

There are two ways you can connect Zone speakers:

1. Connect them directly to the AV receiver.
2. Connect them to an additional amplifier.

Connecting Your Zone Speakers Directly to the AV receiver

This setup allows you to select different sources for Main room and Zone 2/3. This is called Powered Zone, as the Zone 2/3 speakers are powered by the AV receiver.

To use this setup, you must activate the Powered Zone 2/3 setting (→ page 59).

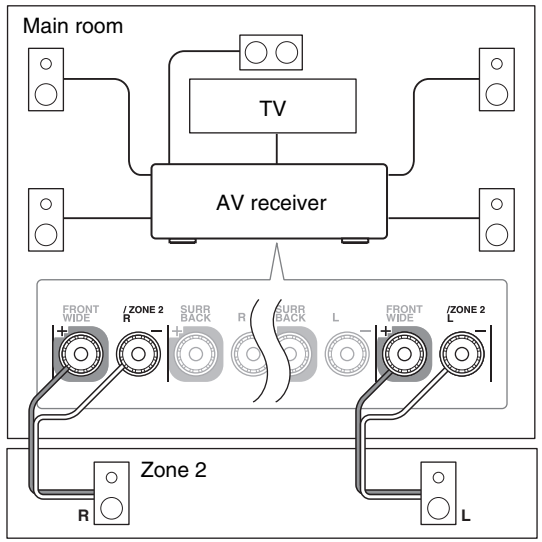

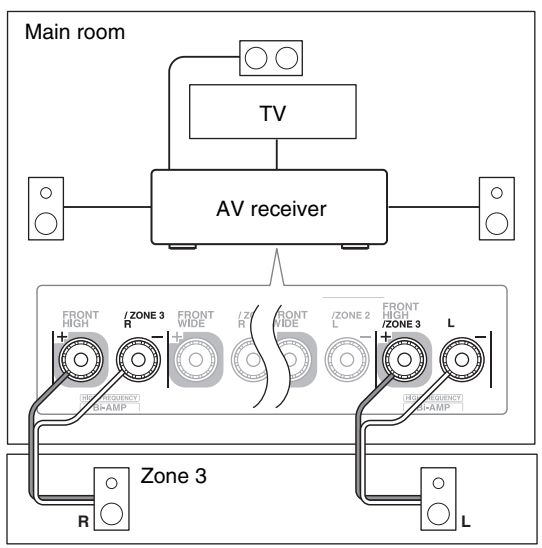

Note

- With this setup, the volume of Zone 2/3 is controlled by the AV receiver.
- When Powered Zone 2 is used, playback in the main room is reduced to 5.1 channels.
- When Powered Zone 3 is used, playback in the main room is reduced to 3.1 channels.

12V Trigger Out

When Zone 2/3 is turned on, the output from the **12V TRIGGER OUT** jack goes high (+12 V and max. 150 mA for Zone 2, +12 V and max. 25 mA for Zone 3). Connecting this jack to a 12-volt trigger input on a component in Zone 2/3 will make that component turn on or off as the AV receiver turns on or off the Zone 2/3.

Connecting the Zone Speakers to an Additional Amplifier

This setup allows 7.1-channel playback in your main listening room and 2-channel stereo playback in Zone 2/3.

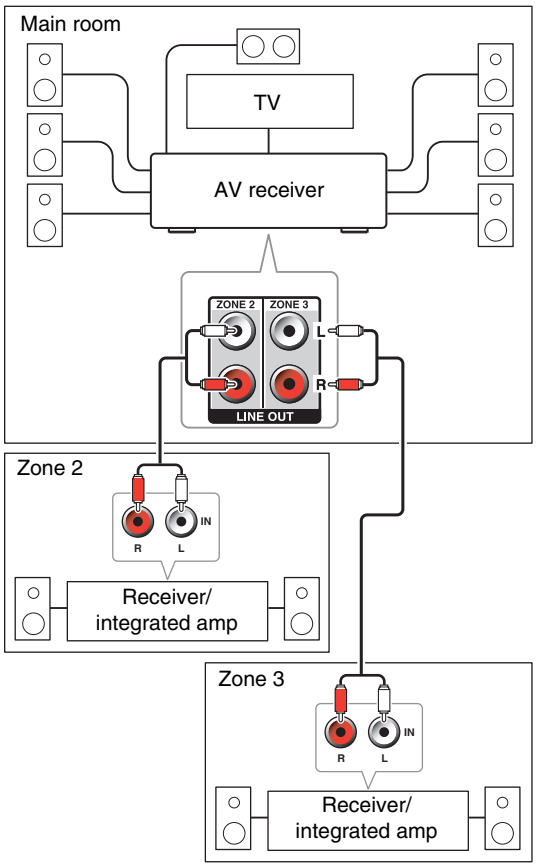

Note

- The volume of Zone 2/3 must be set on the Zone 2/3 amplifier.

Controlling Multi Zone Components

Operating on the AV receiver

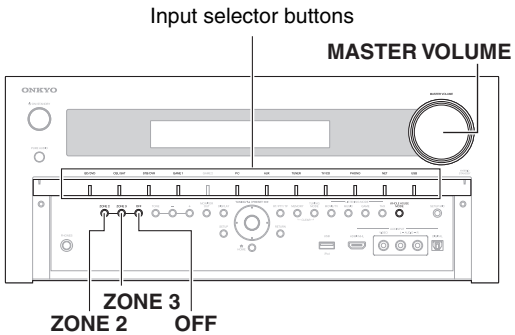

Tip

- The Whole House Mode function shares the input source of main room with Multi Zone (➔ page 49).

1 To turn on Zone 2/3 and select an input source, press ZONE 2 or ZONE 3 followed by an input selector button within 8 seconds.

Zone 2/3 turns on, the **Z2** or **Z3** indicator lights on the AV receiver's display.

Tip

- The corresponding trigger output goes high (+12 V).

To select AM or FM, press **TUNER** input selector and **ZONE 2** or **ZONE 3** repeatedly.

To select the same source as the main room's, press **ZONE 2** or **ZONE 3** twice. "**Zone 2 Selector: Source**" or "**Zone 3 Selector: Source**" appears on the AV receiver's display.

2 To turn off Zone 2/3, press ZONE 2 or ZONE 3. The Z2/Z3 indicator on the AV receiver's display flashes. Press OFF.

The zone is turned off.

Tip

- The corresponding trigger output goes low (0 volts).

Operating on the remote controller

To control Zone 2/3, you must press **ZONE** on the remote controller first.

ZONE turns red when Zone 2 is on, and green when Zone 3 is on.

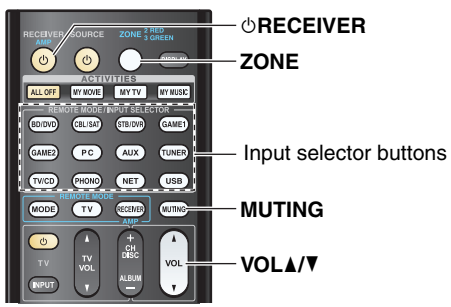

1 Press ZONE repeatedly, then point the remote controller at the AV receiver and press ⏻RECEIVER.

Zone 2/3 turns on, the **Z2** or **Z3** indicator lights on the AV receiver's display.

Tip

- The corresponding trigger output goes high (+12 V).

↳ To be continued

2 To select an input source for Zone 2/3, press ZONE repeatedly, followed by an INPUT SELECTOR button.

To select AM or FM, press the **TUNER** input selector and **ZONE** repeatedly.

3 To turn off Zone 2/3, press ZONE repeatedly, followed by ⏻RECEIVER.

The zone is turned off.

Tip

- The corresponding trigger output goes low (0 volts).

Adjusting the Volume for Zones

■ Operating on the remote controller

1 Press ZONE repeatedly.

2 Use VOL ▲/▼.

■ Operating on the AV receiver

1 Press ZONE 2 or ZONE 3 (the Z2/Z3 indicator on the AV receiver's display flashes).

2 Use MASTER VOLUME control within 8 seconds.

If your Zone 2/3 speakers are connected to a receiver or integrated amplifier in Zone 2/3, use its volume control to adjust the volume.

Muting Zones

■ Operating on the remote controller

1 Press ZONE repeatedly, and then press MUTING.

Tip

- To unmute, press **ZONE** followed by **MUTING** again. Zones can also be unmuted by adjusting the volume.

Note

- Only analog input sources are output by the **ZONE 2/3 LINE OUT** and **FRONT WIDE/ZONE 2 L/R**, **FRONT HIGH/ZONE 3 L/R** terminals. Digital input sources are not output. If no sound is heard when an input source is selected, verify that the source is connected to an analog input.
- You cannot select different AM or FM radio stations for your main room and Zone 2/3. The same AM/FM radio station will be heard in each room. Namely, if you have selected an FM station for the main room, that station will also be output in Zone 2/3.
- When you have selected **NET** or **USB** as input selector, the last selector selected will be set for Main room and Zone 2/3.
- When Zone 2/3 is activated and its input selector is selected, the power consumption of standby mode slightly increases.
- While Zone 2/3 is on, **QUICK** functions will not work.
- When setting the AV receiver to standby mode while Zone 2/3 is active, the **Z2** or **Z3** indicator is dimly lit.
- Activating Zones in the main room when the listening mode is set to Pure Audio will automatically switch it to Direct.
- "**GAME2**" cannot be selected as input sources for Zone 2/3.
- When "**GAME2**" is the input source of Main room and Zone 2/3 is set to share the same source, no sound will be output from Zone 2/3.
- Even if you repeatedly press the remote controller's **ZONE** to select zones, the last zone selection will be retained once you have switched to other components by pressing other **REMOTE MODE** after pressing **ZONE**.

Using the Remote Controller in Zone and Multiroom Control Kits

To control the AV receiver with the remote controller while you're in Zone, you'll need a commercially available multiroom remote control kit for each zone.

• Multiroom kits are made by Niles and Xantech.

These kits can also be used when there isn't a clear line of sight to the AV receiver's remote sensor, such as when it's installed inside a cabinet.

Using a Multiroom Kit with Zone

In this setup, the IR receiver in Zone picks up the infrared signals from the remote controller and feeds them through to the AV receiver in the main room via the connecting block.

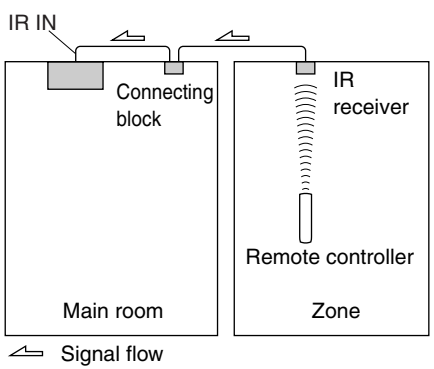

The miniplug cable from the connecting block should be connected to the AV receiver's **IR IN** jack, as shown below.

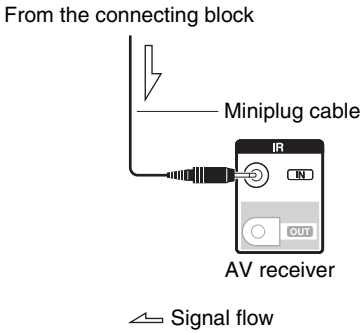

Using a Multiroom Kit with a Cabinet

In this setup, the IR receiver picks up the infrared signals from the remote controller and feeds them to the AV receiver located in the cabinet via the connecting block.

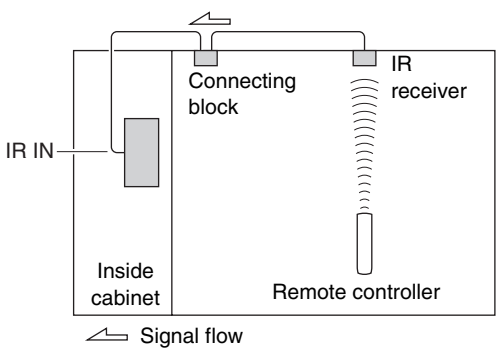

Using a Multiroom Kit with Other Components

In this setup, an IR emitter is connected to the AV receiver's **IR OUT** jack and placed in front of the other component's remote control sensor. Infrared signals received at the AV receiver's **IR IN** jack are fed through to the other component via the IR emitter. Signals picked up by the AV receiver's remote control sensor are not output.

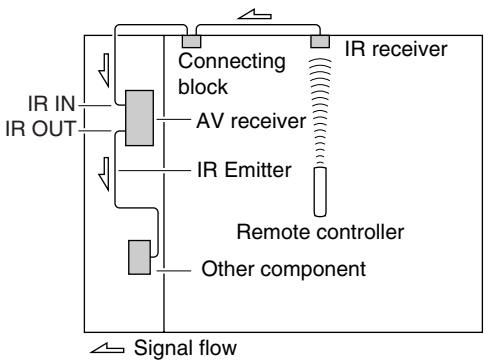

The IR emitter should be connected to the AV receiver's **IR OUT** jack, as shown below.

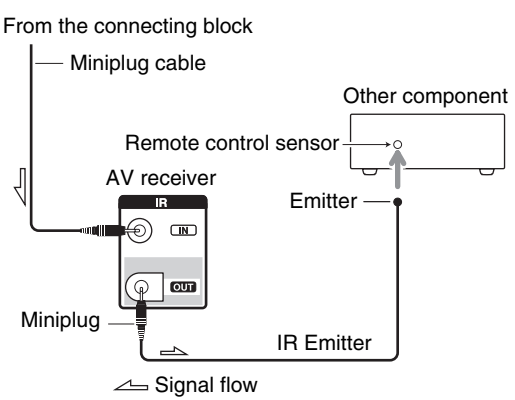

iPod/iPhone Playback via Onkyo Dock

Using the Onkyo Dock

The Dock is sold separately. Models sold are different depending on the region.

For the latest information on the Onkyo Dock components, see the Onkyo web site at:

http://www.onkyo.com

Before using the Onkyo Dock components, update your iPod/iPhone with the latest software, available from the Apple web site.

For supported iPod/iPhone models, see the instruction manual of the Onkyo Dock.

RI Dock

With the RI Dock, you can easily play the music of your iPod/iPhone, or watch the slideshows and videos of your iPod/iPhone on a TV. In addition, the on-screen display (OSD) allows you to view, navigate, and select your iPod/iPhone model's contents on your TV, and with the supplied remote controller, you can control your iPod/iPhone from the comfort of your sofa. You can even use the AV receiver's remote controller to operate your iPod/iPhone.

Note

- Enter the appropriate remote control code before using the AV receiver's remote controller for the first time (➔ page 85).
- Connect the RI Dock to the AV receiver with an RI cable (➔ page 21).
- Set the RI Dock's RI MODE switch to "HDD" or "HDD/DOCK".
- Set the AV receiver's Input Display to "**DOCK**" (➔ page 48).

■ System Function

Depending on your iPod/iPhone model and generation, some of the linked operations may not be available.

System On

When you turn on the AV receiver, the RI Dock and iPod/iPhone turn on automatically. In addition, when RI Dock and iPod/iPhone are on, the AV receiver can be turned on by pressing ⏻**SOURCE**.

Auto Power On

If you press the remote controller's ► (Playback) while the AV receiver is on standby, the AV receiver will automatically turn on, select your iPod/iPhone as the input source, and your iPod/iPhone will start playback.

Direct Change

If you start iPod/iPhone playback while listening to another input source, the AV receiver will automatically switch to the input to which the RI Dock is connected.

Other Remote Operations

You can use the remote controller that came with the AV receiver to control other iPod/iPhone functions. The available functionality depends on the AV receiver.

Note

- If you use your iPod/iPhone with any other accessories, iPod/iPhone playback detection may not work.
- The System On function may not work depending on the RI Dock.

iPod Alarm

If you use the Alarm function on your iPod to start playback, the AV receiver will turn on at the specified time and select your iPod as the input source automatically.

Note

- This linked operation won't work while a video is being played or when the sound set for the alarm is a built-in sound (Beep).
- This linked operation won't work with models on which music files cannot be used to set the alarm sound.

■ Operating Notes

- Use the AV receiver's volume control to adjust the playback volume.
- While your iPod/iPhone is inserted in the RI Dock, its volume control has no effect.
- If you do adjust the volume control on your iPod/iPhone while it's inserted in the RI Dock, be careful that it's not set too loud before you reconnect your headphones.

Controlling Your iPod/iPhone

By pressing the **REMOTE MODE** button that's been programmed with the remote control code for your Dock, you can control your iPod/iPhone in the Dock with the buttons described further in this section.

See "Entering Remote Control Codes" for details on entering a remote control code (➔ page 85).

See the Dock's instruction manual for more information.

RI Dock

- Set the RI Dock's RI MODE switch to "HDD" or "HDD/DOCK".
- ⏻**SOURCE** may not work with a remote control code (without RI). In this case, make an RI connection and enter the remote control code **81993** (with RI).

■ With the RI Control

Make an RI connection and enter the remote control code **81993** (with RI).

- Set the AV receiver's Input Display to "**DOCK**" (➔ page 48).

■ Without the RI Control

You must enter the remote control code **82990** first (➔ page 86).



■ RI Dock operation

Available buttons			
①	**TOP MENU**[*1]	⑤	**DISPLAY**[*2]
②	**▲/▼/◄/►, ENTER**	⑥	**⏻SOURCE**[*3]
	PLAYLIST ◄/►	⑦	**MUTING**
③	**►, ❚❚, ■, ◄◄, ►►, I◄◄, ►►I**	⑧	**ALBUM +/–**
		⑨	**VOL ▲/▼**
④	**REPEAT**	⑩	**MENU**
	RANDOM	⑪	**MODE**[*4]

- With some iPod/iPhone models, generations and RI Docks, certain buttons may not work as expected.
- For detailed operation of iPod/iPhone, please refer to the instruction manual of the RI Dock.

*1 **TOP MENU** works as the mode button when used with the DS-A2 RI Dock.

*2 **DISPLAY** turns on the backlight for a few seconds.

*3 This button does not turn the Onkyo DS-A2 or DS-A2X RI Dock on or off. Also, your iPod/iPhone may not respond the first time you press this button, in which case you should press it again. This is because the remote controller transmits the On and Standby commands alternately, so if your iPod/iPhone is already on, it will remain on when the remote controller transmits the On command. Similarly, if your iPod/iPhone is already off, it will remain off when the remote controller transmits the Off command.

*4 **Resume mode**
With the Resume function, you can resume playback of the song that was playing when you removed your iPod/iPhone from the Onkyo DS-A2 RI Dock.

Controlling Other Components

You can use the AV receiver's remote controller to control your other AV components. This section explains how to enter the remote control code for a component that you want to control: DVD, TV, CD, etc.

See "Learning Commands" for learning commands directly from another component's remote controller (➔ page 89).

See "Using Normal Macros" for programming **ACTIVITIES** to perform a sequence of remote control actions (➔ page 90).

Preprogrammed Remote Control Codes

The following **REMOTE MODE** buttons are preprogrammed with remote control codes for controlling the components listed. You do not need to enter a remote control code to control these components.

For details on controlling these components, see the indicated pages.

BD/DVD Onkyo Blu-ray Disc player (➔ page 87)
TV/CD Onkyo CD player (➔ page 86)
STB/DVR Apple TV

Looking up for Remote Control Codes

You can look up for an appropriate remote control code from the on-screen menu.

You need to connect your TV to the HDMI output (HDMI OUT MAIN) to make the following on-screen setting.

1. **Press RECEIVER followed by HOME.**
2. **Use ◄/► to select "Setup", and then press ENTER.**
3. **Use ▲/▼ to select "Remote Controller Setup", and then press ENTER.**
4. **Use ▲/▼ to select "Remote Mode Setup", and then press ENTER.**
5. **Use ▲/▼ to select a remote mode, and then press ENTER.**
   The menu of category selection appears.
6. **Use ▲/▼ to select a category, and then press ENTER.**
   The keyboard screen for brand name input appears.
7. **Use ▲/▼/◄/► to select a character, and then press ENTER.**
   Repeat this step for the first three characters of the brand name.
   When you have entered the 3rd character, select "**Search**" and press **ENTER**.
   A list of brand names is retrieved.
   If the desired brand name is not found:
   Use ► to select "Not Listed", and then press ENTER.
   The keyboard screen for brand name input appears.
8. **Use ▲/▼ to select a brand, and then press ENTER.**
   A remote control code with its instructions are displayed. Follow the procedure.
9. **If you can control the component, use ▲/▼ to select "OK", and then press ENTER.**
   The on-screen menu returns to the "**Remote Mode Setup**" front screen.

   If you cannot control the component, use ▲/▼ to select "Try Next Code" and press ENTER.
   The next code is displayed.

Entering Remote Control Codes

You'll need to enter a code for each component that you want to control.

1 Look up the appropriate remote control code in the separate Remote Control Codes list.

The codes are organized by category (e.g., DVD player, TV, etc.).

2 While holding down the REMOTE MODE button to which you want to assign a code, press and hold down DISPLAY (about 3 seconds).

The **REMOTE MODE** button lights.

Note

- Remote control codes cannot be entered for **RECEIVER** and the multi zone button.
- Only TV remote control codes can be entered for **TV**.
- Except for **RECEIVER**, **TV**, and the multi zone button, remote control codes from any category can be assigned for the **REMOTE MODE** buttons. However, these buttons also work as input selector buttons (➔ page 26), so choose a **REMOTE MODE** button that corresponds with the input to which you connect your component. For example, if you connect your CD player to the CD input, choose **TV/CD** when entering its remote control code.

3 Within 30 seconds, use the number buttons to enter the 5-digit remote control code.

The **REMOTE MODE** button flashes twice.

If the remote control code is not entered successfully, the **REMOTE MODE** button will flash once slowly.

Note

- Though the provided remote control codes are correct at the time of release, they are subject to change.

Remapping Colored Buttons

You can change the configuration of colored buttons, with which **REMOTE MODE** buttons are preset.

1 While holding down the REMOTE MODE button that you want to program, press and hold down A (Red) until the REMOTE MODE button lights (about 3 seconds).

You can only change colored buttons for components whose codes belong to categories of the Remote Control Codes list (BD/DVD player, TV, cable set-top box, etc).

2 Within 30 seconds, press the colored buttons in the order that you want to reassign them.

The button presses are assigned to each button from left to right. The **REMOTE MODE** button flashes twice, indicating that the sequence has been successfully assigned. If the sequence is not successfully assigned, the **REMOTE MODE** button will flash once slowly.

Tip

- To reset the **REMOTE MODE** buttons to their default settings, see "Resetting the REMOTE MODE Buttons" (➔ page 86).

Note

- If any other button than the colored buttons is pressed, the operation will be cancelled.
- This operation cannot be done while the AV receiver is in Receiver mode or when ZONE 2/3 is active.

Remote Control Codes for Onkyo Components Connected via RI

Onkyo components that are connected via RI are controlled by pointing the remote controller at the AV receiver, not the component. This allows you to control components that are out of view, in a rack, for example.

1. **Make sure the Onkyo component is connected with an RI cable and an analog audio cable (RCA).**
   See "Connecting Onkyo RI Components" for details (➔ page 21).
2. **Enter the appropriate remote control code for a REMOTE MODE button, by referring to the previous section.**
   - **42157**:
     Onkyo cassette tape deck with RI
   - **81993**:
     Onkyo Dock with RI
3. **Press the REMOTE MODE button, point the remote controller at the AV receiver, and operate the component.**

Controlling Onkyo components without RI

If you want to control an Onkyo component by pointing the remote controller directly at it, or you want to control an Onkyo component that's not connected via RI, use the following remote control codes:

- **30627**:
  Onkyo DVD player without RI
- **71817**:
  Onkyo CD player without RI
- **32900/33100/33500**:
  Onkyo Blu-ray Disc player
- **32901/33104/33504**:
  Onkyo HD DVD player
- **70868**:
  Onkyo MD recorder without RI
- **71323**:
  Onkyo CD recorder without RI
- **82990**:
  Onkyo Dock without RI

Resetting the REMOTE MODE Buttons

You can reset a **REMOTE MODE** button to its default remote control code.

1. **While holding down the REMOTE MODE button that you want to reset, press and hold down HOME until the REMOTE MODE button lights (about 3 seconds).**
2. **Within 30 seconds, press the REMOTE MODE button again.**
   The **REMOTE MODE** button flashes twice, indicating that the button has been reset.
   Each **REMOTE MODE** button is preprogrammed with a remote control code. When a button is reset, its preprogrammed code is restored.

Note

- The learning command is also reset.

Resetting the Remote Controller

You can reset the remote controller to its default settings.

1. **While holding down RECEIVER, press and hold down HOME until RECEIVER lights (about 3 seconds).**
2. **Within 30 seconds, press RECEIVER again.**
   RECEIVER flashes twice, indicating that the remote controller has been reset.

Controlling Other Components

By pressing the **REMOTE MODE** button that's been programmed with the remote control code for your component, you can control your component as described below.

For details on entering a remote control code for other components, see "Entering Remote Control Codes" (➔ page 85).

Controlling a TV

TV is preprogrammed with the remote control code for controlling a TV that supports the RIHD[*1] (limited to some models). The TV must be able to receive remote control commands via RIHD and be connected to the AV receiver via HDMI. If controlling your TV via RIHD doesn't work very well, program your TV's remote control code into **TV** and use the TV remote mode to control your TV.

Use the following remote control codes:

- **11807/13100/13500**:
  TV with RIHD

Controlling Apple TV

By programming the supplied remote controller with the appropriate remote control code, you can use it to operate your Apple TV.

Use the following remote control codes:

- **02615**:
  Apple TV

Controlling MHL-Enabled Mobile Device

By programming the supplied remote controller with the appropriate remote control code, you can use it to operate your MHL-enabled mobile device.

Connect your MHL-enabled mobile device to the **AUX INPUT MHL** jack. We advise you to program the remote control code on the **AUX** button.

Use the following remote control codes:

(North American models)

- **33101**:
  MHL-enabled mobile device

(European, Australian, and Asian models)

- **32910**:
  MHL-enabled mobile device

Note

- With some mobile devices, reliable operation cannot be guaranteed.

Controlling a Blu-ray Disc/DVD Player, HD DVD Player or DVD Recorder

BD/DVD is preprogrammed with the remote control code for controlling a component that supports the RIHD*1 (limited to some models). The component must be able to receive remote control commands via RIHD and be connected to the AV receiver via HDMI.

Use the following remote control codes:

- **32910/33101/33501/31612**:
  Blu-ray Disc/DVD player with RIHD

*1 The RIHD supported by the AV receiver is the CEC system control function of the HDMI standard.

Press the appropriate **REMOTE MODE** button first.

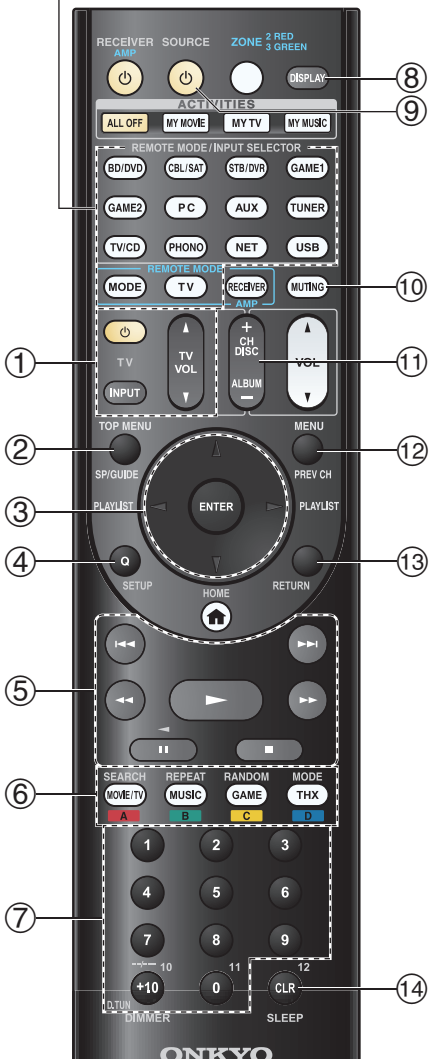

TV operation

Available buttons			
①	⏻, **INPUT**, **TV VOL ▲/▼**	⑦	Number: **1** to **9**, **0**
②	**GUIDE**		Number: **+10***1
③	**▲/▼/◄/►** **ENTER**	⑧	**DISPLAY**
		⑩	**MUTING**
④	**SETUP**	⑪	**CH +/–**
⑤	►, ❚❚, ■, ◄◄, ►►, I◄◄, ►►I*1	⑫	**PREV CH**
		⑬	**RETURN**
⑥	**A** (Red)*1	⑭	**CLR**
	B (Green)*1		
	C (Yellow)*1		
	D (Blue)*1		

Blu-ray Disc/HD DVD player operation

Available buttons			
②	**TOP MENU**	⑦	Number: **1** to **9**, **0**
③	**▲/▼/◄/►** **ENTER**		Number: **+10***1
		⑧	**DISPLAY**
④	**SETUP**	⑨	**⏻SOURCE**
⑤	►, ❚❚, ■, ◄◄, ►►, I◄◄, ►►I	⑩	**MUTING**
		⑪	**CH +/–**
⑥	**A** (Red)		**DISC +/–**
	B (Green)	⑫	**MENU**
	C (Yellow)	⑬	**RETURN**
	D (Blue)	⑭	**CLR**

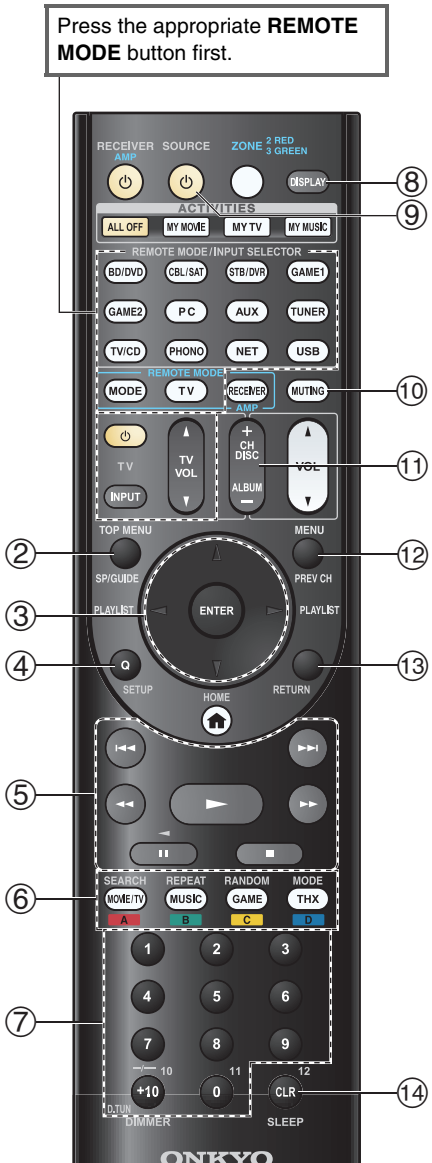

■ DVD player/DVD recorder operation

Available buttons			
②	**TOP MENU**	⑦	Number: **1** to **9**, **0**
③	**▲/▼/◄/►** **ENTER**		Number: **+10**[*1]
		⑧	**DISPLAY**
④	**SETUP**	⑨	**⏻SOURCE**
⑤	**►**, **❚❚**, **■**, **◄◄**, **►►**, **I◄◄**, **►►I**	⑩	**MUTING**
		⑪	**CH +/–**
⑥	**A** (Red)[*1]		**DISC +/–**
	B (Green)	⑫	**MENU**
	C (Yellow)[*1]	⑬	**RETURN**
	D (Blue)[*1]	⑭	**CLR**

■ VCR/PVR operation

Available buttons			
②	**GUIDE**	⑧	**DISPLAY**
③	**▲/▼/◄/►** **ENTER**	⑨	**⏻SOURCE**
		⑩	**MUTING**
④	**SETUP**	⑪	**CH +/–**
⑤	**►**, **❚❚**, **■**, **◄◄**, **►►**, **I◄◄**, **►►I**	⑫	**PREV CH**
		⑬	**RETURN**
⑦	Number: **1** to **9**, **0**	⑭	**CLR**
	Number: **+10**		

■ Cassette tape deck operation

Available buttons			
⑤	**►**, **◄** (Reverse Playback), **■**, **◄◄**, **►►**, **I◄◄**, **►►I**	⑨	**⏻SOURCE**
		⑩	**MUTING**

■ Satellite receiver/Cable receiver operation

Available buttons			
②	**GUIDE**	⑦	Number: **1** to **9**, **0**
③	**▲/▼/◄/►** **ENTER**		Number: **+10**
		⑧	**DISPLAY**
④	**SETUP**	⑨	**⏻SOURCE**
⑤	**►**, **❚❚**, **■**, **◄◄**, **►►**, **I◄◄**, **►►I**	⑩	**MUTING**
		⑪	**CH +/–**
⑥	**A** (Red)	⑫	**PREV CH**
	B (Green)	⑬	**RETURN**
	C (Yellow)	⑭	**CLR**
	D (Blue)		

■ CD player/CD recorder/MD recorder operation

Available buttons			
③	**▲/▼/◄/►** **ENTER**	⑦	Number: **1** to **9**, **0**
			Number: **+10**
④	**SETUP**	⑧	**DISPLAY**
⑤	**►**, **❚❚**, **■**, **◄◄**, **►►**, **I◄◄**, **►►I**	⑨	**⏻SOURCE**
		⑩	**MUTING**
⑥	**SEARCH**	⑪	**DISC +/–**
	REPEAT	⑭	**CLR**
	RANDOM		
	MODE		

Note

- With some components, certain buttons may not work as expected, and some may not work at all.
- See “Controlling Your iPod/iPhone” about the operation of iPod/iPhone (➔ page 83).

[*1] The RIHD function is not supported. The RIHD supported by the AV receiver is the CEC system control function of the HDMI standard.

Learning Commands

The AV receiver's remote controller can learn the commands of other remote controllers. By transmitting, for example, the Play command from your CD player's remote controller, the supplied remote controller can learn it and then reproduce the exact same command when its ► is pressed in CD remote mode.
This is useful when some buttons don't work as expected though you entered the appropriate remote control code (➔ page 85).

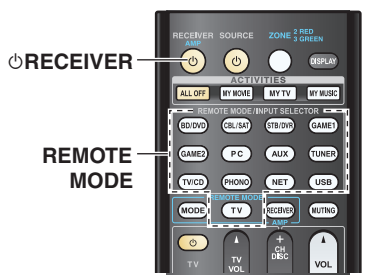

1 **While holding down the REMOTE MODE button for the mode in which you want to use the command, press and hold down ⏻RECEIVER until the REMOTE MODE button lights (about 3 seconds).**

2 **On the supplied remote controller, press the button to which you want to assign the new command.**

3 **Point the remote controllers at each other, within about 4 inches (10 cm) apart, and then press and hold the button whose command you want to acquire until the REMOTE MODE button flashes.**

If the command is learned successfully, the **REMOTE MODE** button flashes twice.

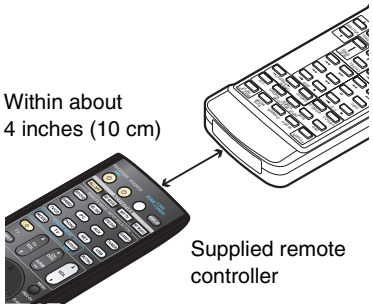

4 **To learn more commands, repeat steps 2 and 3.**

Press any REMOTE MODE button when you've finished. The REMOTE MODE button flashes twice.

Note

- The following buttons cannot learn new commands: **⏻RECEIVER**, **ALL OFF**, **MY MOVIE**, **MY TV**, **MY MUSIC**, **REMOTE MODE**, **MODE**.
- The remote controller can learn approximately 70 to 90 commands, although this will be less if commands that use a lot of memory are learned.
- Remote controller buttons such as Play, Stop, and Pause are preprogrammed with commands for controlling Onkyo CD players, cassette decks, and DVD players. However, they can learn new commands, and you can restore the preprogrammed commands at any time by resetting the remote controller (➔ page 86).
- To overwrite a previously acquired command, repeat this procedure.
- Depending on the remote controller used, some buttons may not respond as expected, or the learning process itself may not be possible.
- Only commands from infrared remote controllers can be acquired.
- When the remote controller runs out of batteries, all commands acquired will be lost and will have to be learned all over again. Therefore, do not discard your other remote controllers.

Deleting Acquired Commands

1. While holding down the **REMOTE MODE** button for the mode from which you want to delete a command, press and hold down **⏻TV** until the **REMOTE MODE** button lights (about 3 seconds).
2. Press the **REMOTE MODE** button or the button from which you want to delete the command.
   The **REMOTE MODE** button flashes twice.
   When you press the **REMOTE MODE** button, all commands learned in that mode will be deleted.

Using Normal Macros

You can program the remote controller's **ACTIVITIES** to perform a sequence of remote control actions.

Example:

To play a CD you typically need to perform the following actions:

1. Press **RECEIVER** to select the Receiver remote controller mode.
2. Press ⏻**RECEIVER** to turn on the AV receiver.
3. Press **TV/CD** to select the TV/CD input source.
4. Press ► to start playback on the CD player.

You can program **ACTIVITIES** so that all four actions are performed with just one button press.

Making Macros

Each **ACTIVITIES** can store one macro, and each macro can contain up to 32 commands.

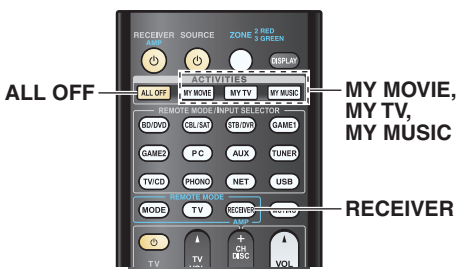

1 **While holding down RECEIVER, press and hold down MY MOVIE, MY TV, or MY MUSIC until MY MOVIE, MY TV, or MY MUSIC lights (about 3 seconds).**

2 **Press the buttons whose actions you want to program into the macro in the order you want them performed.**

For the CD example above, you would press the following buttons: ⏻**RECEIVER**, **TV/CD**, ►.

3 **When you've finished, press ACTIVITIES again.**

ACTIVITIES button flashes twice.

If you enter 32 commands, the process will finish automatically.

Note

- **MODE** cannot be operated during the macro-making process.
- Once you assign new macro commands, the previously registered macro will no longer work. If you wish to retrieve it, you will have to reassign the commands with the macro-making.

Running Macros

1 **Press MY MOVIE, MY TV, or MY MUSIC.**

The commands in the macro are transmitted in the order in which they were programmed. Keep the remote controller pointed at the AV receiver until all of the commands have been transmitted.

Macros can be run at any time, regardless of the current remote controller mode.

Deleting Macros

1 **While holding down HOME, press and hold down ALL OFF until ALL OFF lights (about 3 seconds).**

2 **Press ALL OFF again.**

ALL OFF flashes twice.

Note

- When Normal macros are deleted, **ACTIVITIES** are restored to their default settings, namely the Easy macro commands (➔ page 50).
- When using Normal macros, Easy macros cannot be used, which includes changing the source components.

Troubleshooting

If you have any trouble using the AV receiver, look for a solution in this section. If you can't resolve the issue yourself, contact your Onkyo dealer.

If you can't resolve the issue yourself, try resetting the AV receiver before contacting your Onkyo dealer.

To reset the AV receiver to its factory defaults, turn it on and, while holding down CBL/SAT, press ⏻ON/STANDBY. "Clear" will appear on the AV receiver's display and the AV receiver will enter standby mode.

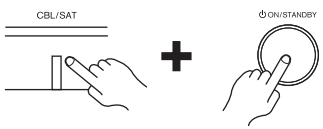

Note that resetting the AV receiver will delete your radio presets and custom settings.

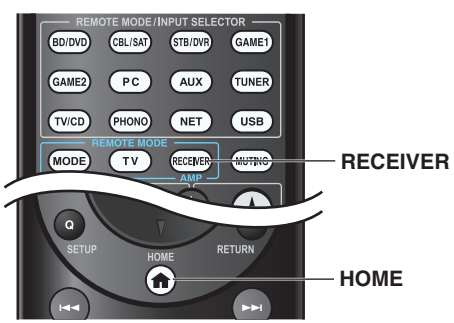

To reset the remote controller to its factory defaults, while holding down **RECEIVER**, press and hold down **HOME** until **RECEIVER** lights (about 3 seconds). Within 30 seconds, press **RECEIVER** again.

The on-screen information appears only on a TV that is connected to HDMI outputs. If your TV is connected to other video outputs, use the AV receiver's display when changing settings.

Power

Can't turn on the AV receiver

Make sure that the power cord is properly plugged into the wall outlet.	—
Unplug the power cord from the wall outlet, wait five seconds or more, then plug it in again.	—

The AV receiver turns off unexpectedly

The AV receiver will automatically enter standby mode when Auto Standby has been set and launches.	76

The AV receiver turns off and after restoring the power, it turns off again

The protection circuit has been activated. Remove the power cord from the wall outlet immediately. Make sure that all speaker cables and input sources are properly connected, and leave the AV receiver with its power cord disconnected for 1 hour. After that, reconnect the power cord and turn the power on. If the AV receiver turns off again, unplug the power cord and contact your Onkyo dealer. Caution: If "**CHECK SP WIRE**" appears on the AV receiver's display, the speaker cables may be shorting.	15

WARNING

If smoke, smell or abnormal noise is produced by the AV receiver, unplug the power cord from the wall outlet immediately and contact your Onkyo dealer.

Audio

There's no sound, or it's very quiet

Make sure that the digital input source is selected properly.	59
Make sure that all audio connecting plugs are pushed in all the way.	18
Make sure that the inputs and outputs of all components are connected properly.	19-21
Make sure that the polarity of the speaker cables is correct, and that the bare wires are in contact with the metal part of each speaker terminal.	15
Make sure that the input source is properly selected.	26
Make sure that the speaker cables are not shorting.	15
Check the volume. The AV receiver is designed for home theater enjoyment. It has a wide volume range, allowing precise adjustment.	—
If the **MUTING** indicator is flashing on the AV receiver's display, press the remote controller's **MUTING** button to unmute the AV receiver.	49
While a pair of headphones is connected to the **PHONES** jack, no sound is output from the speakers.	49
If there's no sound from a DVD player connected to an HDMI IN, check the DVD player's output settings, and be sure to select a supported audio format.	—
Check the digital audio output setting on the connected device. On some game consoles, such as those that support DVD, the default setting is off.	—
With some DVD-Video discs, you need to select an audio output format from a menu.	—
If your turntable uses an MC cartridge, you must connect an MC head amp, or an MC transformer.	—
Make sure that none of the connecting cables are bent, twisted, or damaged.	—
Not all listening modes use all speakers.	40
Specify the speaker distances and adjust the individual speaker levels.	61
Make sure that the speaker setup microphone is not still connected.	—

If the input signal format is set to "**PCM**" or "**DTS**". Set it to "**Off**".	72

Only the front speakers produce sound

When the Stereo or Mono listening mode is selected, only the front speakers and subwoofer produce sound.	43
In the Mono listening mode, only the front speakers output sound if the "**Output Speaker**" setting is set to "**Left / Right**".	64
Check the Speaker Configuration.	60

Only the center speaker produces sound

If you use the Dolby Pro Logic IIx Movie, Dolby Pro Logic IIx Music, or Dolby Pro Logic IIx Game listening mode with a mono source, such as an AM radio station or mono TV program, the sound is concentrated in the center speaker.	—
In the Mono listening mode, only the center speaker output sound if the "**Output Speaker**" setting is set to "**Center**".	64
Make sure the speakers are configured correctly.	60

The surround speakers produce no sound

When the T-D (Theater-Dimensional), Stereo or Mono listening mode is selected, the surround speakers produce no sound.	—
Depending on the source and current listening mode, not much sound may be produced by the surround speakers. Try selecting another listening mode.	40
Make sure the speakers are configured correctly.	60

The center speaker produces no sound

When the Stereo or Mono listening mode is selected, the center speaker produces no sound.	—
In the Mono listening mode, only the front speakers output sound if the "**Output Speaker**" setting is set to "**Left / Right**".	64
Make sure the speakers are configured correctly.	60

The front high, front wide and surround back speakers produce no sound

Depending on the current listening mode, no sound may be produced by the front high, front wide and surround back speakers. Select another listening mode.	40
Depending on the sources, the sound produced by the front high, front wide and surround back speakers may be weak.	—
Make sure the speakers are configured correctly.	60
When Powered Zone 2 is used, playback in the main room is reduced to 5.1channels and the front high, front wide and surround back speakers produce no sound.	—
When Powered Zone 3 is used, playback in the main room is reduced to 3.1channels and the front high, front wide and surround back speakers produce no sound.	—

The subwoofer produces no sound

When you play source material that contains no information in the LFE channel, the subwoofer produces no sound.	—
Make sure the speakers are configured correctly.	60

There's no sound with a certain signal format

Check the digital audio output setting on the connected device. On some game consoles, such as those that support DVD, the default setting is off.	—
With some DVD-Video discs, you need to select an audio output format from a menu.	—
Depending on the input signal, some listening modes cannot be selected.	40-46

Can't select the Pure Audio listening mode

The Pure Audio listening mode cannot be selected while Zone 2/3 is on.	—

Can't get 6.1/7.1 playback

If no surround back speakers, front wide and front high speakers are connected, or the Zone 2/3 speakers are being used, 6.1/7.1 playback is not possible.	—
Depending on the number of connected speakers, it is not always possible to select all of the listening modes.	40-46

The speaker volume cannot be set as required

Check to see if a maximum volume has been set.	73
If the volume level of each individual speaker has been adjusted to high positive values, then the maximum master volume possible may be reduced. Note that the individual speaker volume levels are set automatically after the Audyssey MultEQ® XT32 Room Correction and Speaker Setup has been performed.	37, 61

Noise can be heard

Using cable ties to bundle audio cables with power cords, speaker cables, and the like may degrade the audio performance, so refrain from doing it.	—
An audio cable may be picking up interference. Try repositioning your cables.	—

The Late Night function doesn't work

Make sure the source material is Dolby Digital, Dolby Digital Plus, and Dolby TrueHD.	53
Make sure that the "**TrueHD Loudness Management**" setting is not set to "**Off**". The Late Night function doesn't work when this setting is disabled.	65

About DTS signals

When DTS program material ends and the DTS bitstream stops, the AV receiver remains in DTS listening mode and the **dts** indicator remains on. This is to prevent noise when you use the pause, fast forward, or fast reverse function on your player. If you switch your player from DTS to PCM, you may not hear any sound because the AV receiver does not switch formats immediately. In such case, you should stop your player for about three seconds and then resume playback.	—
With some CD and LD players, you won't be able to playback DTS material properly even though your player is connected to a digital input on the AV receiver. This is usually because the DTS bitstream has been processed (e.g., output level, sampling rate, or frequency response changed) and the AV receiver doesn't recognize it as a genuine DTS signal. In such cases, you may hear noise.	—
Playing DTS program material, using the pause, fast forward, or fast reverse function on your player may produce a short audible noise. This is not a malfunction.	—

The beginning of audio received by an HDMI IN can't be heard

Since it takes longer to identify the format of an HDMI signal than it does for other digital audio signals, audio output may not start immediately.	—

There's no sound during Whole House Mode

Make sure you've selected an analog audio input.	59

Video

There's no picture

Make sure that all video connecting plugs are pushed in all the way.	18
Make sure that each video component is properly connected.	19, 20
If your TV is connected to the HDMI output, select "- - - - -" in the "**HDMI Input**" setting to watch composite video, and component video sources.	58
If the video source is connected to a component video input, you must assign that input to an input selector, and your TV must be connected to either the HDMI output or **COMPONENT VIDEO MONITOR OUT**.	20, 58
If the video source is connected to a composite video input, your TV must be connected to the HDMI output or the corresponding composite video output.	20
If the video source is connected to an HDMI input, you must assign that input to an input selector, and your TV must be connected to the HDMI output.	19, 58
While the Pure Audio listening mode is selected, the video circuitry is turned off and only video signals input through **HDMI IN** can be output.	40
On your TV, make sure that the video input to which the AV receiver is connected is selected.	—

There's no picture from a source connected to an HDMI IN

Reliable operation with an HDMI-to-DVI adapter is not guaranteed. In addition, video signals from a PC are not guaranteed.	106
When the resolution is set to any resolution not supported by the TV, no video is output from the HDMI output.	57
If the message "**Resolution Error**" appears on the AV receiver's display, this indicates that your TV does not support the current video resolution and you need to select another resolution on your DVD player.	—

The on-screen menus don't appear

On your TV, make sure that the video input to which the AV receiver is connected is selected.	—
When the AV receiver is not connected to a TV via **HDMI OUT MAIN**, on-screen menus are not displayed.	—

The on-screen information does not appear

Depending on the input signal, the on-screen information may not appear when the input signal from **HDMI IN** is output to a device connected to the HDMI output.	51

Tuner

Reception is noisy, FM stereo reception is noisy, or the FM STEREO indicator doesn't light

Relocate your antenna.	—
Move the AV receiver away from your TV or computer.	—
Listen to the station in mono.	34
When listening to an AM station, operating the remote controller may cause noise.	—
Passing cars and airplanes can cause interference.	—
Concrete walls weaken radio signals.	—
If nothing improves the reception, install an outdoor antenna.	—

Remote Controller

The remote controller doesn't work

Before operating this unit, be sure to press **RECEIVER**.	—
Make sure that the batteries are installed with the correct polarity.	5
Install new batteries. Don't mix different types of batteries, or old and new batteries.	5
Make sure that the remote controller is not too far away from the AV receiver, and that there's no obstruction between the remote controller and the AV receiver's remote control sensor.	5
Make sure that the AV receiver is not subjected to direct sunshine or inverter-type fluorescent lights. Relocate if necessary.	—
If the AV receiver is installed in a rack or cabinet with colored-glass doors, the remote controller may not work reliably when the doors are closed.	—

Make sure you've selected the correct remote controller mode.	12, 86
When using the remote controller to control other manufacturers' AV components, some buttons may not work as expected.	—
Make sure you've entered the correct remote control code.	85
Make sure to set the same ID on both the AV receiver and remote controller.	77

■ Can't control other components

If it's an Onkyo component, make sure that the RI cable and analog audio cable are connected properly. Connecting only an RI cable won't be enough.	21
Make sure you've selected the correct remote controller mode.	12, 86
If you've connected an cassette tape deck to the **TV/CD IN** jack, or an RI Dock to the **TV/CD IN** or **GAME 1 IN** jacks, for the remote controller to work properly, you must set the input display appropriately.	48
If you cannot operate it, you will need to enter the appropriate remote control code.	84
To control another manufacturer's component, point the remote controller at that component.	85
To control an Onkyo component that's connected via RI, point the remote controller at the AV receiver. Be sure to enter the appropriate remote control code first.	86
To control an Onkyo component that's not connected via RI, point the remote controller at the component. Be sure to enter the appropriate remote control code first.	86
The entered remote control code may not be correct. If more than one code is listed, try each one.	—

■ Can't learn commands from another remote controller

When learning commands, make sure that the transmitting ends of both remote controllers are pointing at each other.	89
Are you trying to learn from a remote controller that cannot be used for learning? Some commands cannot be learned, especially those that contain several instructions.	—

RI Dock for iPod/iPhone

■ There's no sound

Make sure your iPod/iPhone is actually playing.	—
Make sure your iPod/iPhone is properly inserted in the Dock.	—
Make sure the AV receiver is turned on, the correct input source is selected, and the volume is turned up.	—
Make sure the plugs are pushed in all the way.	—
Try resetting your iPod/iPhone.	—

■ There's no video

Make sure that your iPod/iPhone model's TV OUT setting is set to On.	—
Make sure the correct input is selected on your TV or the AV receiver.	—
Some versions of the iPod/iPhone do not output video.	—

■ The AV receiver's remote controller doesn't control my iPod/iPhone

Make sure your iPod/iPhone is properly inserted in the Dock. If your iPod/iPhone is in a case, it may not connect properly to the Dock. Always remove your iPod/iPhone from the case before inserting it into the Dock.	—
The iPod/iPhone cannot be operated while it's displaying the Apple logo.	—
Make sure you've selected the right remote mode.	83
When you use the AV receiver's remote controller, point it toward your AV receiver.	—
If you still can't control your iPod/iPhone, start playback by pressing your iPod/iPhone model's Play button. Remote operation should then be possible.	—
Try resetting your iPod/iPhone.	—
Depending on your iPod/iPhone, some buttons may not work as expected.	—

■ The AV receiver unexpectedly selects my iPod/iPhone as the input source

Always pause iPod/iPhone playback before selecting a different input source. If playback is not paused, the Direct Change function may select your iPod/iPhone as the input source by mistake during the transition between tracks.	—

■ iPod/iPhone doesn't work properly

Try reconnecting your iPod/iPhone.	—

Zone 2/3

■ There's no sound

Only components connected to analog inputs can be played in Zone 2/3.	—

■ The Zone 2/3 speakers produce no sound

If the "**Speakers Type (Front)**" setting is set to other than "**Normal**", Powered Zone 2/3 cannot be used.	59

Music Server and Internet Radio

■ Can't access the server or Internet radio

Check the network connection between the AV receiver and your router or switch.	107
Make sure that your modem and router are properly connected, and make sure they are both turned on.	—
Make sure the server is up and running and compatible with the AV receiver.	108
Check the "**Network**"settings.	76

■ Playback stops while listening to music files on the server

Make sure your server is compatible with the AV receiver.	108

If you download or copy large files on your computer, playback may be interrupted. Try closing any unused programs, use a more powerful computer, or use a dedicated server.	—
If the server is serving large music files to several networked devices simultaneously, the network may become overloaded and playback may be interrupted. Reduce the number of playback devices on the network, upgrade your network, or use a switch instead of a hub.	—

Can't connect to the AV receiver from a Web browser

If you're using DHCP, your router may not always allocate the same IP address to the AV receiver, so if you find that you can't connect to a server or Internet radio station, recheck the AV receiver's IP address on the "**Network**" screen.	76
Check the "**Network**" settings.	76

USB Device Playback

Can't access the music files on a USB device

Make sure the USB device is plugged in properly.	—
The AV receiver supports USB devices that support the USB mass storage device class. However, playback may not be possible with some USB devices even if they conform to the USB mass storage device class.	108
USB memory devices with security functions cannot be played.	—

Others

Standby power consumption

In the following cases, the power consumption in standby mode may reach up to a maximum of 12.0 W: – The "**HDMI Control(RIHD)**" setting is set to "**On**". (Depending on the TV status, the AV receiver will enter standby mode as usual.) – The "**HDMI Through**" setting is set to other than "**Off**". – The "**Network Standby**" setting is set to "**On**".	75, 77
If an MHL-enabled mobile device is connected to the AUX (front) input, the power consumption in standby mode will increase.	19

The sound changes when I connect my headphones

When a pair of headphones is connected, the listening mode is set to Stereo, unless it's already set to Stereo, Mono, Direct, or Pure Audio.	—

The speaker distance cannot be set as required

The values entered may be automatically adjusted with values best-suited for your home theater.	—

The display doesn't work

The display is turned off when the Pure Audio listening mode is selected.	—

How do I change the language of a multiplex source

Use the "**Multiplex**" setting in the "**Audio Adjust**" menu to select "**Main**" or "**Sub**".	64

The RI functions don't work

To use RI, you must make an RI connection and an analog audio connection (RCA) between the component and AV receiver, even if they are connected digitally.	21
While Zone 2/3 is selected, the RI functions don't work.	21

The functions System On/Auto Power On and Direct Change don't work for components connected via RI

These functions don't work when Zone 2/3 is turned on.	21

When performing Automatic Speaker Setup, the measurement fails and the message "Ambient noise is too high." is displayed.

This can be caused by a malfunction in your speaker unit. Check if the unit produces normal sounds.	—

The following settings can be made for the composite video inputs

You must use the buttons on the unit to make these settings.

On the AV receiver, press the input selector for the input source that you want to set and the **SETUP** button simultaneously. While holding down the input selector button, press **SETUP** until "**Video ATT :On**" appears on the AV receiver's display. Then, release both buttons. To turn the setting off, repeat the above process so that "**Video ATT :Off**" appears on the AV receiver's display, and release the buttons.

- **Video Attenuation**

  This setting can be made for the **BD/DVD**, **CBL/SAT**, **STB/DVR**, **GAME 1**, **AUX**, or **USB** input.

  If you have a game console connected to the composite video input, and the picture isn't very clear, you can attenuate the gain.

  Video ATT :Off: The gain is not changed (default).

  Video ATT :On: The gain is reduced by the values specified below.

  – 2 dB for the HDMI output.
  – 6 dB for the **MONITOR OUT V** output.

■ If the picture on your TV/monitor connected to the HDMI output is unstable, try switching the DeepColor function off

To turn off the DeepColor function, simultaneously press the **STB/DVR** and ⏻**ON/STANDBY** buttons on the AV receiver. While holding down **STB/DVR**, press ⏻**ON/STANDBY** until "**Deep Color:Off**" appears on the AV receiver's display. Then, release both buttons. To reactivate the DeepColor function, repeat the above process until "**Deep Color:On**" appears on the AV receiver's display and release the buttons.

The AV receiver contains a microcomputer for signal processing and control functions. In very rare situations, severe interference, noise from an external source, or static electricity may cause it to lockup. In the unlikely event that this happens, unplug the power cord from the wall outlet, wait at least five seconds, and then plug it back in.

Onkyo is not responsible for damages (such as CD rental fees) due to unsuccessful recordings caused by the unit's malfunction. Before you record important data, make sure that the material will be recorded correctly.

Before disconnecting the power cord from the wall outlet, set the AV receiver to standby.

Important Note Regarding Video Playback

The AV receiver can upconvert component video and composite video sources for display on a TV connected to the HDMI output. However, if the picture quality of the source is poor, upconversion may make the picture worse or disappear altogether.
In this case, try the following:

1 **If the video source is connected to a component video input, connect your TV to COMPONENT VIDEO MONITOR OUT.**

If the video source is connected to a composite video input, connect your TV to **MONITOR OUT V**.

2 **On the main menu, select "Input/Output Assign", and then "Component Video Input" (➔ page 58).**

If the video source is connected to **COMPONENT VIDEO IN 1**, select the relevant input selector, and assign it to "**IN1**".
If the video source is connected to **COMPONENT VIDEO IN 2**, select the relevant input selector, and assign it to "**IN2**".
If the video source is connected to a composite video input, select the relevant input selector, and assign it to "**- - - - -**".

Tip

- To by-pass the upconversion, set the "**Picture Mode**" setting to "**Direct**" (➔ page 70).

Firmware Update

To update the firmware of the AV receiver, you can choose from the following two methods: update via network, or update via USB storage. Choose the one that best suits your environment. Before proceeding with the update, please read the corresponding explanations carefully.

■ Update via network

You need a wired Internet connection to update the firmware.

■ Update via USB storage (➔ page 99)

Please prepare a USB storage device such as a USB flash memory stick. You need at least 32 MB of available space to update the firmware.

Note

- Check the network connection before updating.
- Do not touch any cable or device connected to the AV receiver during the update process.
- Do not attempt to access the AV receiver from your PC while it is being updated.
- Do not shutdown the power of the AV receiver while it is being updated.
- The storage media in the USB card reader may not work.
- If the USB device is partitioned, each section will be treated as an independent device.
- If the USB device contains a lot of data, the AV receiver may take a while to read it.
- Operation is not guaranteed for all USB devices, which includes the ability to power them.
- Onkyo takes no responsibility whatsoever for the loss or damage of data resulting from the use of a USB device with the AV receiver. Onkyo recommends that you back up your important music files beforehand.
- If you connect a USB hard disk drive to the USB port, Onkyo recommends that you use its AC adapter to power it.
- USB hubs and USB devices with hub functions are not supported. Do not connect your USB device via a USB hub.
- USB devices with security functions are not supported.

Limitation of liability

The program and accompanying online documentation are furnished to you for use at your own risk. Onkyo will not be liable and you will have no remedy for damages for any claim of any kind whatsoever concerning your use of the program or the accompanying online documentation, regardless of legal theory, and whether arising in tort or contract. In no event will Onkyo be liable to you or any third party for any special, indirect, incidental, or consequential damages of any kind, including, but not limited to, compensation, reimbursement or damages on account of the loss of present or prospective profits, loss of data, or for any other reason whatsoever.

See the Onkyo web site for latest information.

Updating the Firmware via Network

The AV receiver allows you to update the firmware using network connection on the rear panel.

Note

- Make sure your AV receiver and TV are turned on and an Ethernet cable is connected to the rear panel of the AV receiver.
- Never unplug or turn off the AV receiver while it is being updated.
- Never plug or unplug an HDMI or Ethernet cable during the update process.
- Do not attempt to access the AV receiver from your PC while it is being updated.
- Never unplug the power cord during the update process.
- It takes up to 60 minutes to complete the firmware update.
- The AV receiver will retain all your settings after the update is finished.

Before Starting

- Set the "**HDMI Control(RIHD)**" setting to "**Off**" (➔ page 75).
- Turn off the controller device connected via RS232 and Ethernet cable.
- Turn off Multi Zone if this function is present.
- Stop playback of contents from Internet Radio, iPod/iPhone, USB or servers, etc.

Update Procedure

1. **Press RECEIVER followed by HOME on the remote controller.**
   The Home menu appears on the TV screen.
2. **Select "Firmware Update" and press ENTER.**
   Note that the "**Firmware Update**" option will be grayed out for a short while after the AV receiver is turned on. Please wait until it becomes operable.
3. **Select "Update via NET" and press ENTER.**
   Note that this option will not be available if there is no firmware file newer than the currently installed version.
4. **Select "Update" and press ENTER.**
   The update process will begin.
   During the update process, the on-screen display may disappear depending on the updated program. When this occurs, you can still view the update progress on the AV receiver's display. The on-screen display will reappear after the update is complete, and upon turning the AV receiver off and on again.
5. **The message "Completed!" appears on the AV receiver's display, indicating that the update has been completed.**
6. **Turn off the AV receiver using ⏻ON/STANDBY on the front panel.**
   Do not use ⏻**RECEIVER** on the remote controller.
   Once turned off, the AV receiver will automatically turn on again.
   Congratulations! You now have the latest firmware installed on your Onkyo AV receiver.

Troubleshooting

Case 1:

If an error occurs, "**Error!! *-****" is displayed on the AV receiver's display. (Alpha-numeric characters on the front display are denoted by asterisks.) Refer to the following table and take appropriate action.

■ Errors during an update via network

Error Code	Description
***-10**, ***-20**	The Ethernet cable was not detected. Reconnect the cable properly.
***-11**, ***-13**, ***-21**, ***-28**	Internet connection error. Check the following items: • Make sure the IP address, subnet mask, gateway address, and DNS server are configured properly. • Make sure the router is turned on. • Make sure the AV receiver and the router are connected with an Ethernet cable. • Make sure your router is configured properly. See the instruction manual of the router. • If your network allows only one client connection and there is any other device already connected, the AV receiver will not be able to access the network. Consult your Internet Service Provider (ISP). • If your modem does not function as a router, you will need a router. Depending on your network, you may need to configure the proxy server if necessary. See the document provided by your ISP. If you are still unable to access the Internet, the DNS or proxy server may be temporarily down. Contact your ISP.
Others	Retry the update procedure from the beginning. If the error persists, please contact Onkyo Support (➔ page 100) and provide the error code.

Case 2:

If an error occurs during the update process, disconnect then reconnect the AC power cord and try again.

Case 3:

If you do not have an Internet connection to the network, please contact Onkyo Support (➔ page 100).

Updating the Firmware via USB

The AV receiver allows you to update the firmware using a USB device.

Note

- Never unplug or turn off the AV receiver during the update process.
- Never plug or unplug an HDMI cable or a USB device during the update process.
- Never unplug the USB storage device containing the firmware file or the AC power cord during the update process.
- Do not attempt to access the AV receiver from your PC while it is being updated.
- It takes up to 60 minutes to complete the firmware update.
- The AV receiver will retain all your settings after the update is finished.

Before Starting

- Set the "**HDMI Control(RIHD)**" setting to "**Off**" (➔ page 75).
- Turn off the controller device connected via Ethernet cable.
- Turn off Multi Zone if this function is present.
- Stop playback of contents from Internet Radio, iPod/iPhone, USB or servers, etc.
- If there is any data in the USB device, remove it first.

Update Procedure

1 **Connect a USB device to your PC. If there is any data in the USB device, remove it first.**

2 **Download the firmware file from the Onkyo web site. The file name is as follows:**

ONKAVR**_**********.zip**

Unzip the downloaded file. The following five files are created:

ONKAVR**_**********.of1**
ONKAVR**_**********.of2**
ONKAVR**_**********.of3**
ONKAVR**_**********.of4**
ONKAVR**_**********.of5**

3 **Copy the extracted files to the USB device. Be careful not to copy the zip file.**

4 **Remove the USB device from your PC and connect it to the USB port on the AV receiver.**

When the AV receiver has two USB ports, you can use either one.

5 **Make sure the AV receiver and TV are turned on.**

If the AV receiver is in standby mode, press **⏻ON/STANDBY** on the AV receiver to light up the front display.

6 **Select the USB input source.**

"**Now Initializing...**" appears on the AV receiver's display and then the name of the USB device is displayed. It takes 20 to 30 seconds to recognize the USB device.

7 **Press RECEIVER followed by HOME on the remote controller.**

The Home menu appears on the TV screen.

8 **Select "Firmware Update" and press ENTER.**

9 **Select "Update via USB" and press ENTER.**

Note that this option will not be available if there is no firmware file newer than the currently installed version.

10 **Select "Update" and press ENTER.**

The update process will begin.

During the update process, the on-screen display may disappear depending on the updated program. When this occurs, you can still view the update progress on the AV receiver's display. The on-screen display will reappear after the update is complete, and upon turning the AV receiver off and on again.

Do not turn off the AV receiver and do not remove the USB device during the update process.

11 **The message "Completed!" appears on the AV receiver's display, indicating that the update has been completed.**
Remove the USB device.

12 **Turn off the AV receiver using ⏻ON/STANDBY on the front panel.**

Do not use **⏻RECEIVER** on the remote controller.

Once turned off, the AV receiver will automatically turn on again.

Congratulations! You now have the latest firmware installed on your Onkyo AV receiver.

Troubleshooting

Case 1:

If an error occurs, "**Error!! *-****" is displayed on the AV receiver's display. (Alpha-numeric characters on the front display are denoted by asterisks.) Refer to the following table and take appropriate action.

■ Errors during an update via USB

Error Code	Description
***-10**, ***-20**	The USB device was not detected. Make sure the USB flash memory or USB cable is properly connected to the USB port. If the USB storage device has its own power supply, use it to power the USB device.
***-14**	The firmware file was not found in the root folder of the USB device, or the firmware file is for another model. Retry and download the file on the support page of the web site, following the on-site instructions. If the error persists, please contact Onkyo Support and provide the error code.
Others	Retry the update procedure from the beginning. If the error persists, please contact Onkyo Support and provide the error code.

Case 2:

If an error occurs during the update process, disconnect then reconnect the AC power cord and try again.

Onkyo Sound & Vision Corporation
2-1, Nisshin-cho, Neyagawa-shi, OSAKA 572-8540, JAPAN
http://www.onkyo.com/

The Americas
Onkyo U.S.A. Corporation
18 Park Way, Upper Saddle River, N.J. 07458, U.S.A.
For Dealer, Service, Order and all other Business Inquiries:
Tel: 201-785-2600
Fax: 201-785-2650
Hours:M-F 9am-5pm ET
http://www.us.onkyo.com/

For Product Support Team Only:
1-800-229-1687
Hours:M-F 9am-8pm / Sat-Sun 10am-8pm ET
http://www.us.onkyo.com/

Europe
Onkyo Europe Electronics GmbH
Liegnitzerstrasse 6, 82194 Groebenzell, GERMANY
Tel: +49-8142-4401-0 Fax: +49-8142-4208-213
http://www.eu.onkyo.com/

China, Hong Kong
Onkyo China Limited
Unit 1033, 10/F, Star House, No 3, Salisbury Road, Tsim Sha Tsui Kowloon, Hong Kong.
Tel: 852-2429-3118 Fax: 852-2428-9039
http://www.onkyochina.com

Asia, Oceania, Middle East, Africa
Please contact an Onkyo distributor referring to Onkyo SUPPORT site.
http://www.intl.onkyo.com/support/firmware/index.html

The above-mentioned information is subject to change without prior notice. Visit the Onkyo web site for the latest update.

Connection Tips and Video Signal Path

The AV receiver supports several connection formats for compatibility with a wide range of AV equipment. The format you choose will depend on the formats supported by your components. Use the following sections as a guide.

The on-screen setup menus appear only on a TV that is connected to HDMI OUT MAIN. If your TV is connected to other video outputs, use the AV receiver's display when changing settings.

Video Connection Formats

Video components can be connected by using any one of the following video connection formats: composite video, PC IN (Analog RGB), component video, or HDMI, the latter offering the best picture quality.

Tip

- For optimal video performance, THX recommends that video signals pass through the system without upconversion (e.g., component video input passing through to component video output).
- To by-pass the upconversion, set the "**Picture Mode**" setting to "**Direct**" (➔ page 70).

■ "Monitor Out" set to "HDMI Main" or "HDMI Sub"

Video input signals flow through the AV receiver as shown, with composite video, PC IN (Analog RGB), and component video sources all being upconverted for the HDMI output. Use these settings if you connect either **HDMI OUT MAIN** or **HDMI OUT SUB** of the AV receiver to your TV.

The composite video and component video outputs pass through their respective input signals as they are.

Video Signal Flow Chart

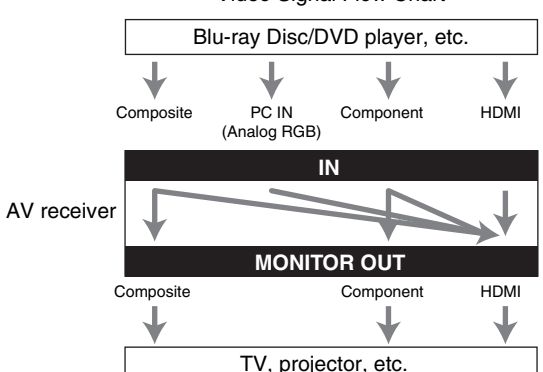

■ "Monitor Out" set to "Both"

Video input signals flow through the AV receiver as shown, with composite video, PC IN (Analog RGB), and component video sources all being upconverted for both HDMI outputs. **Use this setting if you connect both HDMI OUT MAIN and HDMI OUT SUB of the AV receiver to your TV.**

Note that video signals are output from both HDMI outputs at the resolution supported by both TVs.

The composite video and component video outputs pass through their respective input signals as they are.

Video Signal Flow Chart

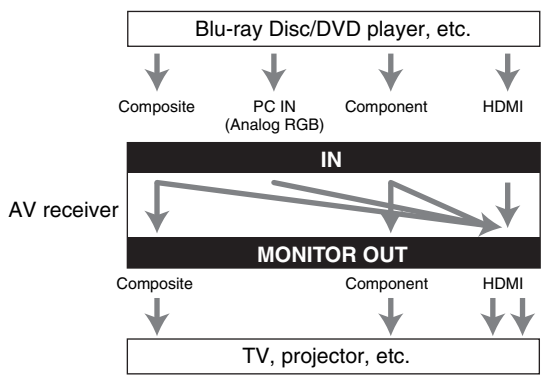

Note

- When "**Monitor Out**" is set to "**Both**", the "**Resolution**" setting cannot be selected.

Signal Selection

If signals are present at more than one input, the inputs will be selected automatically in the following order of priority: HDMI, component video, composite video.

However, for component video only, regardless of whether a component video signal is actually present, if a component video input is assigned to the input selector, that component video input will be selected. And if no component video input is assigned to the input selector, this will be interpreted as no component video signal being present.

In the Signal Selection Example shown below, video signals are present at both the HDMI and composite video inputs. However, the HDMI signal is automatically selected as the source and the video is output by the HDMI output.

Signal Selection Example

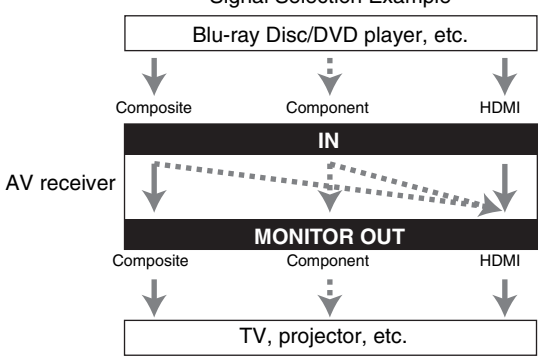

Audio Connection Formats

Audio components can be connected by using any of the following audio connection formats: analog, optical, coaxial, or HDMI.

When choosing a connection format, bear in mind that the AV receiver does not convert digital input signals for analog line outputs and vice versa.

If signals are present at more than one input, the inputs will be selected automatically in the following order of priority: HDMI, digital, analog.

Audio Signal Flow Chart

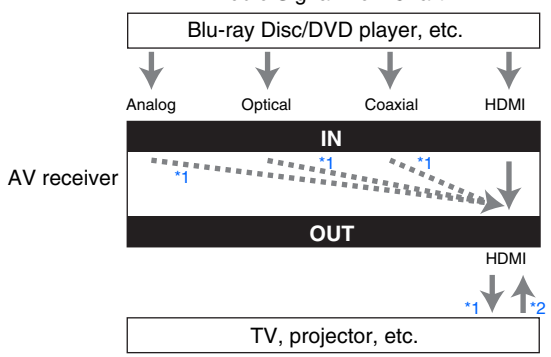

*1 Depends on the "**Audio TV Out**" setting (➔ page 75).

*2 This is possible when "**Audio Return Channel**" is set to "**Auto**" (➔ page 76), the **TV/CD** input selector is selected, and your TV is ARC capable.

Tip

- When a signal is input via HDMI and the corresponding input selector is selected, the **HDMI** indicator lights. In the case of an optical or coaxial connection, the **DIGITAL** indicator lights. In the case of an analog connection, neither of the **HDMI** and **DIGITAL** indicators light.

Video Resolution Chart

The following tables show how video signals at different resolutions are output by the AV receiver.

NTSC/PAL

✔: Output available

Input \ Output		HDMI							Component					Composite
		4K*2	1080p/24	1080p	1080i	720p	480p/576p	480i/576i	1080p	1080i	720p	480p/576p	480i/576i	480i/576i
HDMI	1080p/24	✔	✔*4											
	1080p	✔	✔	✔*4										
	1080i	✔	✔	✔	✔*4	✔								
	720p	✔	✔	✔	✔	✔*4								
	480p/576p	✔	✔	✔	✔	✔	✔*4							
	480i/576i	✔	✔	✔	✔	✔	✔	✔*4						
Component	1080p	✔	✔	✔*4*5					✔					
	1080i	✔	✔	✔*5	✔*4*5	✔				✔				
	720p	✔	✔	✔*5	✔*5	✔*4*5					✔			
	480p/576p	✔	✔	✔*5	✔*5	✔*5	✔*4*5					✔		
	480i/576i	✔	✔	✔*5	✔*5	✔*5	✔*4*5	✔*5					✔	
Composite	480i/576i	✔	✔	✔*5	✔*5	✔*5	✔*4*5	✔*5						✔
PC IN (Analog RGB)*1*3		✔	✔	✔*5	✔*5	✔*5	✔*5							

*1 Available resolutions: [640 × 480 60 Hz], [800 × 600 60 Hz], [1024 × 768 60 Hz], [1280 × 1024 60 Hz]

*2 Supported resolutions: [3840 × 2160 24/25/30 Hz], [4096 × 2160 24 Hz]

*3 When video signals of personal computers connected to **PC IN** are output from **HDMI OUT SUB**, they may not display properly on some TVs.

*4 Supported resolutions for **HDMI OUT SUB** ("**Monitor Out**" = "**Sub**").

*5 Supported resolutions for **HDMI OUT SUB** ("**Monitor Out**" = "**Both**").

Using an RIHD-compatible TV, Player, or Recorder

RIHD, which stands for Remote Interactive over HDMI, is the name of the system control function found on Onkyo components. The AV receiver can be used with CEC (Consumer Electronics Control), which allows system control over HDMI and is part of the HDMI standard. CEC provides interoperability between various components, however, operation with components other than RIHD-compatible components cannot be guaranteed.

About RIHD-Compatible Components

The following components are RIHD-compatible (As of January 2012).

TV

- Toshiba TV
- Sharp TV

Players/Recorders

- Onkyo and Integra RIHD-compatible players
- Toshiba players and recorders
- Sharp players and recorders (only when used together with Sharp TV)

* Models other than those mentioned above may have some interoperability if compatible with CEC, which is part of the HDMI Standard, but operation cannot be guaranteed.

Note

- For proper linked operations, do not connect more RIHD-compatible components than the quantities specified below, to the HDMI input terminal.
  – Blu-ray Disc/DVD players: up to three.
  – Blu-ray Disc/DVD recorders/Digital Video Recorders: up to three.
  – Cable/Satellite Set-top boxes: up to four.
- Do not connect the AV receiver to another AV receiver/AV amplifier via HDMI.
- Proper linked operations are not guaranteed when more RIHD-compatible components than the above-mentioned quantities are connected.

Operations that can be performed with RIHD connection

For RIHD-compatible TV

The following linked operations are enabled by connecting the AV receiver to an RIHD-compatible TV.

- The AV receiver will enter standby mode when the TV is set to standby.
- You can set on the menu screen of the TV to either output the audio from the speakers connected to the AV receiver, or from the speakers of the TV.
- It is possible to output the audio coming from the tuner or auxiliary input of your TV to the speakers of the AV receiver. (A connection such as an optical digital cable or similar is required in addition to the HDMI cable.)
- Input to the AV receiver can be selected with the remote controller of the TV.
- Operations such as volume adjustment or similar for the AV receiver can be performed from the remote controller of the TV.

For RIHD-compatible players/recorders

The following linked operations are enabled by connecting the AV receiver to an RIHD-compatible player/recorder.

- When playback is started on the player/recorder, AV receiver will switch to the HDMI input of the player/recorder that is playing back.
- Operation of the player/recorder is possible using the remote controller supplied with the AV receiver.

* Depending on the model used, not all operations may be available.

To be continued

How to connect and setup

1 Confirm the connection and settings.

1. Connect the **HDMI OUT MAIN** jack to the HDMI input jack of the TV.

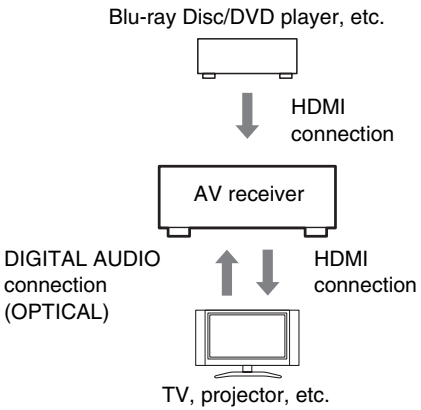

2. Connect the audio output from the TV to the **OPTICAL IN 2** jack of the AV receiver using an optical digital cable.

Note

- When the audio return channel (ARC) function is used with an ARC capable TV, this connection is not necessary (→ page 76).

3. Connect the HDMI output of the Blu-ray Disc/DVD player/recorder to the **HDMI IN 1** jack of the AV receiver.

Note

- It is necessary to assign the HDMI input when connecting the Blu-ray Disc/DVD player/recorder to other jacks (→ page 58). Do not assign an HDMI IN to the TV/CD selector at this time, otherwise appropriate CEC (Consumer Electronics Control) operation will not be guaranteed.

2 Change each item in the "HDMI" menu according to the following settings:

- **HDMI Control(RIHD)**: **On**
- **Audio Return Channel** (ARC): **Auto**

See details of each setting (→ pages 75, 76).

3 Confirm the settings.

1. Turn on the power for all connected components.
2. Turn off the power of the TV, and confirm that the power of the connected components is turned off automatically with the link operation.
3. Turn on the power of the Blu-ray Disc/DVD player/recorder.
4. Start playback on the Blu-ray Disc/DVD player/recorder, and verify the following:
   - The AV receiver automatically turns on, and selects the input to which the Blu-ray Disc/DVD player/recorder is connected.
   - The TV automatically turns on, and selects the input to which the AV receiver is connected.
5. Following the operating instructions of the TV, select "Use the TV speakers" from the menu screen of the TV, and confirm that the audio is output from the speakers of the TV, and not from the speakers connected to the AV receiver.
6. Select "Use the speakers connected from the AV receiver" from the menu screen of the TV, and confirm that the audio is output from the speakers connected to the AV receiver, and not from the TV speakers.

Note

- Perform the above operations when you use the AV receiver for the first time, when the settings of each component are changed, when the main power of each component is turned off, when the power cable is disconnected from the power supply, or when there has been a power outage.

4 Operate with the remote controller.

For buttons that can be operated (→ page 87).

Note

- Audio from DVD-Audio or Super Audio CD may not output from the TV speakers. You will be able to output the audio from the TV speakers by setting the audio output of the DVD player to 2ch PCM. (It may not be possible depending on the player models.)
- Even if you set to output audio on the TV speakers, audio will be output from the speakers connected to the AV receiver when you adjust the volume or switch the input on the AV receiver. To output audio from the TV speakers, re-do the corresponding operations on the TV.
- In case of an RIHD connection with RI and RI audio control compatible components, do not connect the RI cable at the same time.
- On the TV, when you select anything other than the HDMI jack to which the AV receiver is connected, the input on the AV receiver will be switched to "**TV/CD**".
- The AV receiver will automatically power on in conjunction when it determines it to be necessary. Even if the AV receiver is connected to an RIHD compatible TV or player/recorder, it will not power on if it is not necessary. It may not power on in conjunction when the TV is set to output audio from the TV.
- Linked functions with the AV receiver may not work depending on the component model connected. In such cases, operate the AV receiver directly.

About HDMI

Designed to meet the increased demands of digital TV, HDMI (High Definition Multimedia Interface) is a new digital interface standard for connecting TVs, projectors, Blu-ray Disc/DVD players, set-top boxes, and other video components. Until now, several separate video and audio cables have been required to connect AV components. With HDMI, a single cable can carry control signals, digital video, and up to eight channels of digital audio (2-channel PCM, multichannel digital audio, and multichannel PCM).

The HDMI video stream (i.e., video signal) is compatible with DVI (Digital Visual Interface)*1, so TVs and displays with a DVI input can be connected by using an HDMI-to-DVI adapter cable. (This may not work with some TVs and displays, resulting in no picture.)

The AV receiver uses HDCP (High-bandwidth Digital Content Protection)*2, so only HDCP-compatible components can display the picture.

The AV receiver's HDMI interface is based on the following:

Audio Return Channel, 3D, x.v.Color, DeepColor, Lip Sync, DTS-HD Master Audio, DTS-HD High Resolution Audio, Dolby TrueHD, Dolby Digital Plus, DSD and Multichannel PCM.

Supported Audio Formats

- 2-channel linear PCM (32–192 kHz, 16/20/24 bit)
- Multichannel linear PCM (up to 7.1 ch, 32–192 kHz, 16/20/24 bit)
- Bitstream (DSD, Dolby Digital, Dolby Digital Plus, Dolby TrueHD, DTS, DTS-HD High Resolution Audio, DTS-HD Master Audio)

Your Blu-ray Disc/DVD player must also support the HDMI output of the above audio formats.

About Copyright Protection

The AV receiver supports HDCP (High-bandwidth Digital Content Protection)*2, a copy-protection system for digital video signals. Other devices connected to the AV receiver via HDMI must also support HDCP.

*1 DVI (Digital Visual Interface): The digital display interface standard set by the DDWG*3 in 1999.

*2 HDCP (High-bandwidth Digital Content Protection): The video encryption technology developed by Intel for HDMI/DVI. It's designed to protect video content and requires a HDCP-compatible device to display the encrypted video.

*3 DDWG (Digital Display Working Group): Lead by Intel, Compaq, Fujitsu, Hewlett Packard, IBM, NEC, and Silicon Image, this open industry group's objective is to address the industry's requirements for a digital connectivity specification for high-performance PCs and digital displays.

Note

- The HDMI video stream is compatible with DVI (Digital Visual Interface), so TVs and displays with a DVI input can be connected by using an HDMI-to-DVI adapter cable. (Note that DVI connections only carry video, so you'll need to make a separate connection for audio.) However, reliable operation with such an adapter is not guaranteed. In addition, video signals from a PC are not supported.
- The HDMI audio signal (sampling rate, bit length, etc.) may be restricted by the connected source component. If the picture is poor or there's no sound from a component connected via HDMI, check its setup. Refer to the connected component's instruction manual for details.

Network/USB Features

Connecting to the Network

The following diagram shows how you can connect the AV receiver to your home network. In this example, it's connected to a LAN port on a router, which has a 4-port 100Base-TX switch built-in.

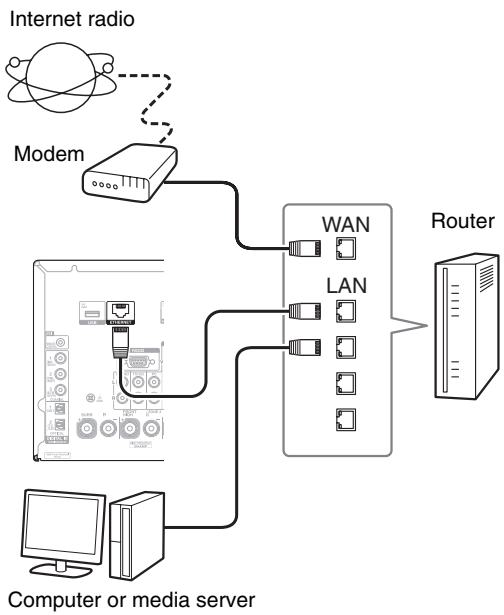

Network Requirements

Ethernet Network

For the best results, a 100Base-TX switched Ethernet network is recommended. Although it's possible to play music on a computer that's connected to the network wirelessly, playback may be unreliable, so it is recommended to use wired connections.

Ethernet Router

A router manages the network, data-routing and supplying of IP addresses. Your router must support the following:

- NAT (Network Address Translation). NAT allows several networked computers to access the Internet simultaneously via a single Internet connection. The AV receiver needs Internet access for Internet radio.
- DHCP (Dynamic Host Configuration Protocol). DHCP supplies IP addresses to the network devices, allowing them to configure themselves automatically.
- A router with a built-in 100Base-TX switch is recommended.

Some routers have a built-in modem, and some Internet Service Providers (ISP) require you to use specific routers. Please consult your ISP or computer dealer if you're unsure.

CAT5 Ethernet cable

Use a shielded CAT5 Ethernet cable (straight-type) to connect the AV receiver to your home network.

Internet Access (for Internet radio)

To receive Internet radio, your Ethernet network must have Internet access. A narrowband Internet connection (e.g., 56K modem, ISDN) will not provide satisfactory results, so a broadband connection is strongly recommended (e.g., cable modem, xDSL modem, etc.). Please consult your ISP or computer dealer if you're unsure.

Note

- To receive Internet radio with the AV receiver, your broadband Internet connection must be working and able to access the Web. Consult your ISP if you have any problems with your Internet connection.
- The AV receiver uses DHCP to configure its network settings automatically. If you want to configure these settings manually, see "Network" (➔ page 76).
- The AV receiver does not support PPPoE settings, so if you have a PPPoE-type Internet connection, you must use a PPPoE-compatible router.
- Depending on your ISP, you may need to specify a proxy server to use Internet radio. If your computer is configured to use a proxy server, use the same settings for the AV receiver (➔ page 77).

Server Requirements

■ Server playback

The AV receiver can play digital music files stored on a computer or media server and supports the following technologies:

- Windows Media Player 11
- Windows Media Player 12
- Windows Media Connect 2.0
- DLNA-certified media server

If the operating system of your computer is Windows Vista, Windows Media Player 11 is already installed.

Windows Media Player 11 for Windows XP can be downloaded for free from the Microsoft web site.

- The computer or media server must be on the same network as the AV receiver.
- Up to 20,000 folders can be displayed, and folders may be nested up to 16 levels deep.

Note

- Depending on the media server, the AV receiver may not recognize it, or may not be able to play its music files.

Minimum system requirements for Windows Media Player 11 on Windows XP

Operating system

Windows XP Home Edition (SP2), Windows XP Professional (SP2), Windows XP Tablet PC Edition (SP2), Update Rollup 2 for Windows XP Media Center Edition 2005 (KB900325), October 2006 Update Rollup for Windows XP Media Center Edition (KB925766)

Processor:	233 MHz Intel Pentium II, Advanced Micro Devices (AMD), etc.
Memory:	64 MB
Hard disk:	200 MB of free space
Drive:	CD or DVD drive
Modem:	28.8 kbps
Sound card:	16-bit sound card
Monitor:	Super VGA (800 x 600)
Video card:	64 MB VRAM, DirectX 9.0b
Software:	Microsoft ActiveSync (only when using a Windows Mobile-based Pocket PC or smartphone)
Web browser:	Microsoft Internet Explorer 6 or Netscape 7.1

■ Remote playback

- Windows Media Player 12
- DLNA-certified (within DLNA Interoperability Guidelines version 1.5) media server or controller device.

The setting varies depending on the media server or controller devices. Refer to your devices' instruction manual for details.

If the operating system of your personal computer is Windows 7, Windows Media Player 12 is already installed. For more information, see the Microsoft web site.

USB Device Requirements

- USB mass storage device class (but not always guaranteed).
- FAT16 or FAT32 file system format.
- If the storage device has been partitioned, each section will be treated as an independent device.
- Up to 20,000 folders can be displayed, and folders may be nested up to 16 levels deep.
- USB hubs and USB devices with hub functions are not supported.

Note

- If the media you connect is not supported, the message "**No Storage**" will be displayed.
- If you connect a USB hard disk drive to the AV receiver's **USB** port, we recommend that you use its AC adapter to power it.
- The AV receiver supports USB MP3 players that support the USB Mass Storage Class standard, which allows USB devices to be connected to computers without the need for special drivers or software. Note that not all USB MP3 players support the USB Mass Storage Class standard. Refer to your USB MP3 player's instruction manual for details.
- Protected WMA music files on an MP3 player cannot be played.
- Onkyo accepts no responsibility whatsoever for the loss or damage to data stored on a USB device when that device is used with the AV receiver. We recommend that you back up your important music files beforehand.
- MP3 players containing music files that are managed with special music software are not supported.
- Operation is not guaranteed for all USB devices, which includes the ability to power them.
- Do not connect your USB device via a USB hub. The USB device must be connected directly to the AV receiver's **USB** port.
- If the USB device contains a lot of data, the AV receiver make take a while to read it.
- USB devices with security functions cannot be played.

Supported Audio File Formats

For server playback and playback from a USB device, the AV receiver supports the following music file formats. Variable bit-rate (VBR) files are supported. However, playback times may not display correctly.

Note

- With remote playback, the AV receiver does not support the following music file formats: FLAC and Ogg Vorbis.
- In the case of server playback, the above-mentioned file formats may not be played depending on the server type.

■ MP3 (.mp3 or .MP3)

- MP3 files must be MPEG-1/MPEG-2 Audio Layer 3 format with sampling rates of 8 kHz, 11.025 kHz, 12 kHz, 16 kHz, 22.05 kHz, 24 kHz, 32 kHz, 44.1 kHz, 48 kHz and bitrates of between 8 kbps and 320 kbps. Incompatible files cannot be played.

■ WMA (.wma or .WMA)

WMA stands for Windows Media Audio and is an audio compression technology developed by Microsoft Corporation. Audio can be encoded in WMA format by using Windows Media® Player.

- WMA files must have the copyright option turned off.
- Sampling rates of 8 kHz, 11.025 kHz, 12 kHz, 16 kHz, 22.05 kHz, 24 kHz, 32 kHz, 44.1 kHz, 48 kHz, bitrates of between 5 kbps and 320 kbps, and WMA DRM are supported.
- WMA Pro/Voice formats are not supported.

■ WMA Lossless (.wma or .WMA)

- Sampling rates of 44.1 kHz, 48 kHz, 88.2 kHz, 96 kHz are supported.
- Quantization bit: 16 bit, 24 bit

■ WAV (.wav or .WAV)

WAV files contain uncompressed PCM digital audio.

- Sampling rates of 8 kHz, 11.025 kHz, 12 kHz, 16 kHz, 22.05 kHz, 24 kHz, 32 kHz, 44.1 kHz, 48 kHz, 64 kHz, 88.2 kHz, 96 kHz, 176.4 kHz and 192 kHz are supported.
- Quantization bit: 8 bit, 16 bit, 24 bit

■ AAC (.aac/.m4a/.mp4/.3gp/.3g2/.AAC/.M4A/.MP4/.3GP or .3G2)

AAC stands for MPEG-2/MPEG-4 Audio.

- Sampling rates of 8 kHz, 11.025 kHz, 12 kHz, 16 kHz, 22.05 kHz, 24 kHz, 32 kHz, 44.1 kHz, 48 kHz, 64 kHz, 88.2 kHz, 96 kHz and bitrates of between 8 kbps and 320 kbps are supported.

■ FLAC (.flac or .FLAC)

FLAC is a file format for lossless audio data compression.

- Sampling rates of 8 kHz, 11.025 kHz, 12 kHz, 16 kHz, 22.05 kHz, 24 kHz, 32 kHz, 44.1 kHz, 48 kHz, 64 kHz, 88.2 kHz, 96 kHz, 176.4 kHz and 192 kHz are supported.
- Quantization bit: 8 bit, 16 bit, 24 bit

■ Ogg Vorbis (.ogg or .OGG)

- Sampling rates of 8 kHz, 11.025 kHz, 12 kHz, 16 kHz, 22.05 kHz, 24 kHz, 32 kHz, 44.1 kHz, 48 kHz and bitrates of between 48 kbps and 500 kbps are supported. Incompatible files cannot be played.

■ LPCM (Linear PCM)

- Sampling rates of 8 kHz, 11.025 kHz, 12 kHz, 16 kHz, 22.05 kHz, 24 kHz, 32 kHz, 44.1 kHz, 48 kHz, 64 kHz, 88.2 kHz and 96 kHz are supported.
- Quantization bit: 8 bit, 16 bit, 24 bit

* Only for playback via network.

■ Apple Lossless (.m4a/.mp4/.M4A/.MP4)

- Sampling rates of 8 kHz, 11.025 kHz, 12 kHz, 16 kHz, 22.05 kHz, 24 kHz, 32 kHz, 44.1 kHz, 48 kHz, 64 kHz, 88.2 kHz and 96 kHz are supported.
- Quantization bit: 16 bit, 24 bit

■ DSD (.dsf or .DSF)

- The sampling rate of 2.8224 MHz is supported.

■ Dolby True HD (.vr/.mlp/.VR/.MLP)

- Sampling rates of 48 kHz, 64 kHz, 88.2 kHz, 96 kHz, 176.4 kHz and 192 kHz are supported.

About DLNA

The Digital Living Network Alliance is an international, cross-industry collaboration. Members of DLNA develop a concept of wired and wireless interoperable networks where digital content such as photos, music, and videos can be shared through consumer electronics, personal computers, and mobile devices in and beyond the home. The AV receiver complies with the DLNA Interoperability Guidelines version 1.5.

License and Trademark Information

"x.v.Color" is a trademark of Sony Corporation.

Manufactured under license under U.S. Patent No's: 5,956,674, 5,974,380, 5,978,762, 6,487,535, 6,226,616, 7,212,872, 7,003,467, 7,272,567, 7,668,723, 7,392,195, 7,333,929, 7,548,853 & other U.S. and worldwide patents issued and pending. DTS-HD, the Symbol, & DTS-HD and the Symbol together are registered trademarks & DTS-HD Master Audio is a trademark of DTS, Inc. Product includes software. © DTS, Inc. All Rights Reserved.

Manufactured under license from Dolby Laboratories. Dolby, Pro Logic, Surround EX and the double-D symbol are trademarks of Dolby Laboratories.

Music Optimizer™ is a trademark of Onkyo Corporation.

"HDMI, the HDMI Logo, and High-Definition Multimedia Interface are trademarks or registered trademarks of HDMI Licensing LLC in the United States and other countries."

InstaPrevue and the InstaPrevue logo are trademarks or registered trademarks of Silicon Image, Inc. in the United States and other countries.

THX and the THX logo are trademarks of THX Ltd. which may be registered in some jurisdictions. All rights reserved.

THX Select2 Plus

Before any home theater component can be THX Select2 Plus certified, it must pass a rigorous series of quality and performance tests. Only then can a product feature the THX Select2 Plus logo, which is your guarantee that the Home Theater products you purchase will give you superb performance for many years to come. THX Select2 Plus requirements define hundreds of parameters, including power amplifier performance, and pre-amplifier performance and operation for both digital and analog domains. THX Select2 Plus receivers also feature proprietary THX technologies (e.g., THX Mode) which accurately translate movie soundtracks for home theater playback.

iPhone, iPod, iPod classic, iPod nano, iPod shuffle, and iPod touch are trademarks of Apple Inc., registered in the U.S. and other countries.
"Made for iPod" and "Made for iPhone" mean that an electronic accessory has been designed to connect specifically to iPod or iPhone, respectively, and has been certified by the developer to meet Apple performance standards. Apple is not responsible for the operation of this device or its compliance with safety and regulatory standards.
Please note that the use of this accessory with iPod or iPhone may affect wireless performance.

Apple TV is a trademark of Apple Inc., registered in the U.S. and other countries.

Manufactured under license from Audyssey Laboratories™, Inc. U.S. and foreign patents pending. Audyssey MultEQ® XT32, Audyssey Dynamic EQ®, Audyssey Dynamic Volume® and Audyssey DSX® are registered trademarks of Audyssey Laboratories, Inc.

"DLNA®, the DLNA Logo and DLNA CERTIFIED™ are trademarks, service marks, or certification marks of the Digital Living Network Alliance."

Windows and the Windows logo are trademarks of the Microsoft group of companies.

Qdeo and QuietVideo are trademarks of Marvell or its affiliates.

HQV® (Hollywood Quality Video) is a trademark of Qualcomm Incorporated.

"Xantech" is a registered trademark of Xantech Corporation.

"Niles" is a registered trademark of Niles Audio Corporation.

Re-Equalization and the "Re-EQ" logo are trademarks of THX Ltd.

"MHL, the MHL Logo, and Mobile High-Definition Link are trademark or registered trademarks of MHL LLC in the United States and other counties."

Specifications

Amplifier Section

Rated Output Power

All channels: **(North American)**
135 watts minimum continuous power per channel, 8 ohm loads, 2 channels driven from 20 Hz to 20 kHz, with a maximum total harmonic distortion of 0.08% (FTC)

(Others)
7 ch × 180 W at 6 ohms, 1 kHz, 1 ch driven of 1% (IEC)

Maximum Effective Output Power

(Asian)
7 ch × 230 W at 6 ohms, 1 kHz, 1 ch driven (JEITA)

Dynamic Power*
* IEC60268-Short-term maximum output power

300 W (3 Ω, Front)
250 W (4 Ω, Front)
150 W (8 Ω, Front)

THD+N (Total Harmonic Distortion+Noise)
0.08% (20 Hz - 20 kHz, half power)

Damping Factor 60 (Front, 1 kHz, 8 Ω)

Input Sensitivity and Impedance (Unbalance)
200 mV/47 kΩ (LINE)
2.5 mV/47 kΩ (PHONO MM)

Rated RCA Output Level and Impedance
200 mV/470 Ω (PRE OUT)

Maximum RCA Output Level and Impedance
4.6 V/470 Ω (PRE OUT)

Phono Overload 70 mV (MM 1 kHz 0.5%)

Frequency Response 5 Hz - 100 kHz/+1 dB, –3 dB (Direct mode)

Tone Control Characteristics
±10 dB, 50 Hz (BASS)
±10 dB, 20 kHz (TREBLE)

Signal to Noise Ratio 110 dB (LINE, IHF-A)
80 dB (PHONO MM, IHF-A)

Speaker Impedance 4 Ω - 16 Ω

Video Section

Input Sensitivity/Output Level and Impedance
1 Vp-p/75 Ω (Component Y)
0.7 Vp-p/75 Ω (Component P_B/C_B, P_R/C_R)
1 Vp-p/75 Ω (Composite)

Component Video Frequency Response
5 Hz - 100 MHz/+0 dB, –3 dB

Tuner Section

FM Tuning Frequency Range
(North American) 87.5 MHz - 107.9 MHz
(Others) 87.5 MHz - 108.0 MHz, RDS

AM Tuning Frequency Range
522/530 kHz - 1611/1710 kHz

Preset Channel 40

General

Power Supply **(North American)** AC 120 V, 60 Hz
(Others) AC 220 - 240 V, 50/60 Hz

Power Consumption **(North American)** 8.1 A
(Others) 720 W

No-sound Power Consumption
(North American) 95 W
(Others) 90 W

Stand-by Power Consumption
0.1 W

Dimensions (W × H × D)
435 mm × 198.5 mm × 435.5 mm
17-1/8" × 7-13/16" × 17-1/8"

Weight 18.3 kg (40.3 lbs.)

HDMI

Input IN 1, IN 2, IN 3, IN 4, IN 5, IN 6, IN 7, AUX INPUT

Output OUT MAIN, OUT SUB

Video Resolution 1080p

Audio Format Dolby TrueHD, DTS-HD Master Audio, DVD-Audio, DSD

Supported 3D, Audio Return Channel, DeepColor, x.v.Color, LipSync, CEC (RIHD)

Video Inputs

Component IN 1, IN 2

Composite BD/DVD, CBL/SAT, STB/DVR, GAME 1, AUX

Analog RGB PC IN

Video Outputs

Component MONITOR OUT

Composite MONITOR OUT

Audio Inputs

Digital Optical: 2 (Rear), 1(Front)
Coaxial: 3

Analog BD/DVD, CBL/SAT, STB/DVR, GAME 1, PC, TV/CD, PHONO, AUX

Audio Outputs

Analog ZONE2 LINE OUT, ZONE3 LINE OUT

Analog Multichannel Pre Outputs
9

Subwoofer Pre Outputs
2

Speaker Outputs Main (L, R, C, SL, SR, SBL, SBR) + Front Wide/ZONE2 (L, R) + Front High/ZONE3 (L, R)

Phones 1 (6.3 ø)

Others

Setup Mic 1

RS232 1

RI 1

USB 1 (Front)/1 (Rear)

Ethernet 1

IR Input 1

IR Output 1

12 V Trigger Out 2

Specifications and features are subject to change without notice.

ONKYO

Onkyo Sound & Vision Corporation
2-1, Nisshin-cho, Neyagawa-shi, OSAKA 572-8540, JAPAN
Tel: 072-831-8023 Fax: 072-831-8163
http://www.onkyo.com/

Onkyo U.S.A. Corporation
18 Park Way, Upper Saddle River, N.J. 07458, U.S.A.
Tel: 800-229-1687, 201-785-2600 Fax: 201-785-2650
http://www.us.onkyo.com/

Onkyo Europe Electronics GmbH
Liegnitzerstrasse 6, 82194 Groebenzell, GERMANY
Tel: +49-8142-4401-0 Fax: +49-8142-4208-213
http://www.eu.onkyo.com/

Onkyo Europe Electronics GmbH (UK Branch)
The Coach House 81A High Street, Marlow, Buckinghamshire, SL7 1AB, UK
Tel: +44-(0)1628-473-350 Fax: +44-(0)1628-401-700

Onkyo China Limited
Unit 1033, 10/F, Star House, No 3, Salisbury Road, Tsim Sha Tsui Kowloon, Hong Kong.
Tel: 852-2429-3118 Fax: 852-2428-9039
http://www.onkyochina.com/

Onkyo China PRC
1301, 555 Tower, No.555 West NanJin Road, Jin an, Shanghai,
China 200041, Tel: 86-21-52131366 Fax: 86-21-52130396
http://www.cn.onkyo.com/

Y1203-1

SN 29401132EN

(C) Copyright 2012 Onkyo Sound & Vision Corporation Japan. All rights reserved.

29401132EN

Using Internet Radio

Common Procedures in Internet Radio Menu

Note

• Available services may vary depending on the region.

1 **Press NET.**
A list of the network services appears, and the **NET** indicator lights. If it flashes, verify that the Ethernet cable is firmly connected to the AV receiver.

2 **Select the desired service and press ENTER.**
The top page of the selected service appears.

Using Multiple Accounts

The AV receiver supports multiple user accounts, which means you can freely switch between several logins. After registering user accounts, login is performed from the "**Users**" screen.

1 **Press MENU while the Users screen is displayed.**
The following menu items appear:
Add new user:
Remove this user:
You can either store a new user account, or delete an existing one.

Tip

• Some of the services don't allow the use of multiple user accounts.
• You can store up to 10 user accounts.
• To switch between accounts you must first log out from the current account, and log in again on the "**Users**" screen.

Pandora® internet radio –Getting Started (U.S. only) 2
Using Rhapsody (U.S. only) 3
Using the SiriusXM Internet Radio (North American only) 4
Using Last.fm Internet Radio 5
Using Slacker Personal Radio 6
Using MP3tunes 7

Pandora® internet radio –Getting Started (U.S. only)

Pandora is a free, personalized Internet radio service that plays the music you know and helps you discover music you'll love.

1 Use ▲/▼ to select "I have a Pandora Account" or "I'm new to Pandora" and then press ENTER.

If you are new to Pandora select "**I'm new to Pandora**". You will see an activation code on your TV screen. Please write down this code. Go to an Internet connected computer and point your browser to **www.pandora.com/onkyo**

Enter your activation code and then follow the instructions to create your Pandora account and your personalized Pandora Internet radio stations. You can create your stations by entering your favorite songs and artists when prompted. After you have created your account and stations you can return to your Onkyo receiver and press enter to begin listening to your personalized Pandora Internet radio.

If you have an existing Pandora account, you can add your Pandora account to your Onkyo receiver by selecting "**I have a Pandora Account**" and logging in with your email and password.

Tip

- If you want to use multiple user accounts, see "Using Multiple Accounts" (➔ page 1). Login can be made from the "**Users**" screen.

2 To play a station, use ▲/▼ to select the station from your station list, and then press ENTER.

Playback starts and the playback screen appears.

Create a New Station:

Enter the name of a song, artist, or genre and Pandora will create a unique radio station for you based on the musical qualities of that song, artist, or genre.

Menu Items

I like this song:

Give a song "thumbs-up" and Pandora will play more music like it.

I don't like this song:

Give a song "thumbs-down" and Pandora will ban that song from the current station.

Why is this song playing?:

Discover some of the musical attributes that Pandora uses to create your personal radio stations.

Don't play the song for a month:

If you are tired of a song, you can put the song to sleep and Pandora will not play it for one month.

Create station from this artist:

Creates a radio station from this artist.

Delete this station:

This will permanently delete a station from your Pandora account. All of your thumbs feedback will be lost should you choose to re-create the station with the same song or artist.

Create station from this song:

Creates a radio station from this song.

Rename this station:

Lets you rename the current radio station.

Bookmark this artist:

Pandora will bookmark your favorite artist for your profile on **www.pandora.com**.

Bookmark this song:

Pandora will bookmark the current song and allow you to buy them all from Amazon or iTunes in one step!

Add to My Favorites:

Adds a station to My Favorites list.

PANDORA internet radio

PANDORA, the PANDORA logo, and the Pandora trade dress are trademarks or registered trademarks of Pandora Media, Inc. Used with permission.

Using Rhapsody (U.S. only)

1 Use ▲/▼ to select "Sign in to your account" and then press ENTER.

To use Rhapsody, you need an account. If you don't have one yet, you can create a new account at **www.rhapsody.com/onkyo**

If you have an existing Rhapsody account, select "**Sign in to your account**" and press **ENTER**.

Enter your user name (usually your email) and password in the next keyboard screen, or in Web Setup.

Using the keyboard screen

1. Use ▲/▼/◄/► and **ENTER** to enter your user name and password.
2. Select "**OK**".
3. Press **ENTER**. The "**Confirm your entries**" screen appears.
4. Press **ENTER**.

Tip

- If you want to use multiple user accounts, see "Using Multiple Accounts" (➔ page 1). Login can be made from the "**Users**" screen.

2 Use ▲/▼ to select the menu, then press ENTER.

Search:

You can search for music by Artist, Album, or Track.

Music Guide:

You can play tracks from Genres, Top Artists, Top Albums, Top Tracks, New Releases, and Staff Picks.

Rhapsody Channels:

Listen to radio channels programmed by Rhapsody's top-notch editors.

Playlists:

Play your own personal playlists.

My Library:

Bookmark your favorite albums and tracks from the Rhapsody catalog using My Library.

Account Info:

Confirm your account information.

Sign Out:

Sign out from your Rhapsody account.

3 Use ▲/▼ to select a channel, and press ENTER or ► to start playback.

Playback starts and the playback screen appears.

You can control the tracks with the buttons on the remote control.

Enabled buttons: ►, ❚❚, ■, ◄◄, ►►, I◄◄, ►►I, **RANDOM**, **REPEAT**

Note

- On Rhapsody Channels, some of the buttons don't work.

Menu Items

Add track to My Library:

Bookmark currently-playing tracks.

Add album to My Library:

Bookmark currently-playing albums.

Add playlist to My Library:

Bookmark currently-playing playlists.

Add channel to My Channels:

Bookmark currently-playing Rhapsody radio channels.

Add to My Favorites:

Adds a track, channel or playlist to My Favorites list.

Tip

- You can remove bookmarked tracks, albums, and Rhapsody Channels from My Library.

Using the SiriusXM Internet Radio (North American only)

Your Onkyo AV receiver includes a free trial of SiriusXM Internet Radio. The "Account Info" screen shows how many days are left in your trial. After the trial period expires, if you want to continue listening to the service, you must subscribe. To subscribe go to **www.siriusxm.com/internetradio** with your computer.

When you subscribe, you will be provided with a username and password which has to be entered into the AV receiver.

To use SiriusXM Internet Radio, you must have your AV receiver connected to the Internet. Using the remote control, follow these steps:

1 Use ▲/▼ to select "Sign In", and then press ENTER.

If you have an existing SIRIUS account, you can sign in by selecting "**Sign In**". Enter your user name and password in the next keyboard screen, or in Web Setup. If you don't know your username or password, call Sirius XM at (888) 539-7474 for assistance.

Tip

- If you want to use multiple user accounts, see "Using Multiple Accounts" (➔ page 1). Login can be made from the "**Users**" screen.

Using the keyboard screen

1. Use ▲/▼/◄/► and **ENTER** to enter your user name and password.
2. Select "**OK**".
3. Press **ENTER**. The "**Confirm your entries**" screen appears.
4. Press **ENTER**.

"**Please wait...**" appears and then "**SiriusXM Internet Radio**" screen appears which displays the category available for selection.

2 Use ▲/▼ to select the category and then press ENTER.

The channel list screen for the selected category appears.

3 Use ▲/▼ to select the desired channel and then press ENTER.

The playback screen for the selected channel appears and you can listen to SiriusXM Internet Radio.

You can control the tracks with the buttons on the remote control.

Enabled buttons: ■, ❚❚, I◄◄, ►►I

Menu Items

Add to My Favorites:

Adds a channel to My Favorites list.

SiriusXM Internet Radio

SiriusXM Internet Radio subscriptions are sold separately and are governed by the Sirius Terms and Conditions (see www.sirius.com). Be sure to read this agreement before you purchase your subscription. Sirius, XM and all related marks and logos are trademarks of Sirius XM Radio Inc. and its subsidiaries. All rights reserved.

Using Last.fm Internet Radio

Last.fm is a music service that learns what you love...
Your new Onkyo AV receiver is very clever. If you have a free Last.fm account, it will keep track of all the songs you've just played. When you visit the Last.fm website, you can see personal charts of the music you've enjoyed, share them with friends and see what they like, too.

With thousands of biographies, reviews and an endless choice of personalised, ad-free radio stations, Last.fm is a great way to discover music. Pick up your free Last.fm account today at www.last.fm/join

Get a subscription and you can enjoy the best of ad-free Last.fm Radio on your Onkyo AV receiver without a computer!

Recommended Radio:
Discover smart personalised recommendations that adapt as your tastes change.

Artist Radio:
Pick any artist and we'll play you a whole station of music inspired by your choice.

My Library:
Sit back and enjoy selections from all the music you've heard since you joined Last.fm.

Tag Radio:
Polish funk? Death pop? Think of a style and we'll entertain you with it for hours.

Start your free trial straight away when you create your account and see for yourself what it's like to have the world's music at your fingertips. Latest prices and full information are available at www.last.fm/subscribe

1 Use ▲/▼ to select "Sign in to your account", and then press ENTER.

If you have the existing Last.fm account, you can sign in to your account to select "**Sign in to your account**". Enter your user name and password in the next keyboard screen.

■ Using the keyboard screen

1. Use ▲/▼/◄/► and the **ENTER** to enter your user name and password.
2. Select "**OK**".
3. Press **ENTER**. The "**Confirm your entries**" screen appears.
4. Press **ENTER**.

"**Please wait...**" appears and then "**Last.fm Internet Radio**" screen appears.

Tip

- If you want to use multiple user accounts, see "Using Multiple Accounts" (➔ page 1). Login can be made from the "**Users**" screen.

2 Use ▲/▼ to select menu and then press ENTER.

Search Station:
You can search station by Artist, Tag, or User Name.

Top Artists Station:
You can play tracks of top-rated artists.

Top Tags Station:
You can play tracks of top-rated tags.

Personal Station:
- You can play tracks from personalized station ("**Your Library**", "**Your Neighbourhood**" and "**Your Recommendations**").

Profile:
You can play tracks from "**Recently Listened Tracks**", "**Library**" and "**Neighbours**".

Account Info:
Confirm your account information.

Sign Out:
It signs out from your account.

3 Use ▲/▼ to select a station, and press ENTER or ► to start playback.

Playback starts and the playback screen appears.

■ Menu Items

I Love this track:
Track information is saved in Last.fm server, and playback frequency increases.

Ban this track:
Track information is saved in Last.fm server, and playback frequency reduces.

Add to My Favorites:
Adds a station to My Favorites list.

■ Using scrobbling control

Use ▲/▼ to select "**Enable**", and then press **ENTER**.

* Internet radio services provided by a third party may be terminated with or without notice.
Internet radio services may not be available in some areas.

Using Slacker Personal Radio

1 If you do not have an account, create one on the Slacker website (www.slacker.com) with your computer.

If you already have a Slacker account, select "Sign in to your account" and then press ENTER.

The keyboard screen appears. You can enter information from the remote control or the keys on the main unit.

2 If there are no mistakes in the information you have entered, use ▲/▼/◄/► to select "OK" then press ENTER.

An account information confirmation screen appears.

3 If you do not have an account, select "Access without Sign In" and press ENTER to use a restricted version of the service.

Note that use will be restricted.

Tip

- If you want to use multiple user accounts, see "Using Multiple Accounts" (➔ page 1). Login can be made from the "**Users**" screen.

4 Use ▲/▼ to select a menu item and then press ENTER.

To sign out, use ▲/▼ to select "**Sign out**" from this screen and then press **ENTER**.

5 Use ▲/▼ to select a station and then press ENTER or ► to start playback from the station.

The playback screen appears.

6 You can control the tracks with the buttons on the remote control.

Enabled buttons: ►, ❚❚, ■, ►►|

■ Menu Items

Rate Song as Favorite:

Stores information to server, making it more likely that the song will be played again.

Ban Song:

Stores information to server, making it less likely that the song will be played again.

Ban Artist:

Stores information to server, making it less likely that the songs from this artist will be played again.

Mark Favorite:

Adds the currently playing station to your favorites.

Unmark Favorite:

Deletes the currently playing station from your favorites.

Add song to Library:

Adds the currently playing track to your library.

Delete song from Library:

Deletes the currently playing track from your library.

Add to My Favorites:

Adds a station or song to My Favorites list.

Using MP3tunes

Listen to your music collection on your home stereo in complete digital fidelity without a personal computer plus safely backup all your songs. Here's how:

Creating an Account on your Computer

1. **From your computer, open a web browser and go to: www.mp3tunes.com/signup**
2. **Create an account.**
3. **Click the Upload link (www.mp3tunes.com/upload) to add files to your Locker.**
4. **View, edit and listen to your files by clicking on Player (www.mp3tunes.com/player).**

Playing Contents on the AV Receiver

Tip

- Before proceeding, you need to select the MP3tunes service as described in "Common Procedures in Internet Radio Menu" (➔ page 1).

1. **Use ▲/▼ to select "Sign in to your account", and then press ENTER.**
2. **Enter the e-mail address and password you used when creating your account, select "OK" and press ENTER.**
   The keyboard screen appears. You can enter your user name and password from the remote controller or the buttons on the AV receiver.
3. **If there are no mistakes in the information you have entered, select "OK" and press ENTER.**
   An account information confirmation screen appears.

   Tip

   - If you want to use multiple user accounts, see "Using Multiple Accounts" (➔ page 1). Login can be made from the "**Users**" screen.
4. **Use ▲/▼ to select the menu, then press ENTER.**
   Music:
   The place to find your Artists, Albums, and Playlists.
   Shuffle:
   Starts playing a random selection of tracks from your Locker.
   Search:
   Find a specific Album, Artist, or Song.
   Account Info:
   Your MP3tunes account information.
   Sign Out:
   Log out of your MP3tunes account.

The track at the top of the music list is automatically played back.

5. **Use ▲/▼ to select a track and press ENTER or ► to start playback.**
   A playback screen appears.
   You can control the tracks with the buttons on the remote control.
   Enabled buttons: ►, ❚❚, ■, |◄◄, ►►|

   ■ Menu Items
   Go to Menu:
   Displays additional menu options.
6. **You can view or change your MP3tunes account settings by going to www.mp3tunes.com/account.**

Utilisation d’une webradio

Procédures courantes dans le menu de webradio

Remarque

• Les services disponibles peuvent varier en fonction de la région.

1 **Appuyez sur NET.**
Une liste des services réseau s’affiche, et le témoin **NET** s’allume. S’il clignote, vérifiez que le câble Ethernet est fermement branché sur l’ampli-tuner AV.

2 **Sélectionnez le service désiré et appuyez sur ENTER.**
La page principale du service sélectionné s’affiche.

Utilisation de plusieurs comptes

L’ampli-tuner AV prend en charge plusieurs comptes utilisateur, ce qui signifie que vous pouvez librement commuter entre plusieurs connexions. Après avoir enregistré des comptes utilisateur, l’identification est réalisée à partir de l’écran « **Users** ».

1 **Appuyez sur MENU lorsque l’écran Users est affiché.**
Les éléments de menu suivants s’affichent :
Add new user :
Remove this user :
Vous pouvez soit stocker un nouveau compte utilisateur, soit en supprimer un existant.

Conseil

• Certains des services ne permettent pas l’utilisation de plusieurs comptes utilisateur.
• Vous pouvez stocker jusqu’à 10 comptes utilisateur.
• Pour commuter entre les comptes, vous devez d’abord vous déconnecter du compte actuel, puis vous reconnectez depuis l’écran « **Users** ».

Pandora® internet Radio –Pour commencer (États-Unis uniquement) 2
Utilisation de Rhapsody (Etats-Unis uniquement) 3
Utilisation de SiriusXM Internet Radio (Amérique du Nord uniquement) 4
Utilisation de la webradio Last.fm 5
Utilisation de Slacker Personal Radio 6

Pandora® internet Radio –Pour commencer (États-Unis uniquement)

Pandora est un service de radio en ligne libre et personnalisé vous permettant de lire la musique que vous connaissez et de découvrir celle que vous aimez.

1 Utilisez ▲/▼ pour sélectionner « I have a Pandora Account » ou « I'm new to Pandora », puis appuyez sur ENTER.

Si vous ne connaissez pas Pandora sélectionnez « **I'm new to Pandora** ». Un code d'activation apparaîtra sur l'écran de votre téléviseur. Notez ce code. Utilisez un ordinateur branché sur Internet et connectez le navigateur à **www.pandora.com/onkyo**

Saisissez votre code d'activation puis suivez les instructions pour créer votre compte Pandora et vos stations webradio Pandora personnalisées. Lorsque vous y êtes invités, vous pouvez créer vos stations en saisissant vos chansons et vos artistes préférés. Après la création de votre compte et de vos stations, vous pouvez retourner à votre récepteur Onkyo et appuyez sur entrée pour écouter votre webradio Pandora personnalisée.

Si vous disposez d'un compte Pandora, vous pouvez ajouter votre compte Pandora à votre récepteur Onkyo en sélectionnant « **I have a Pandora Account** » et y accéder en entrant votre adresse e-mail et votre mot de passe.

Conseil

- Si vous souhaitez utiliser plusieurs comptes utilisateur, consultez « Utilisation de plusieurs comptes » (→ page 1). L'identification peut être réalisée à partir de l'écran « **Users** ».

2 Pour lire une station, utilisez ▲/▼ pour sélectionner la station dans votre liste de stations, puis appuyez sur ENTER.

La lecture débute et l'écran de lecture s'affiche.

Create a New Station :

Saisissez le nom d'une chanson, d'un artiste ou d'un genre et Pandora créera une station radio unique pour vous en fonction des qualités musicales de la chanson, de l'artiste ou du genre choisi.

■ Eléments du menu

I like this song :

Acceptez la chanson et Pandora lira d'autres musiques similaires.

I don't like this song :

Rejetez la chanson et Pandora éliminera cette chanson de la station courante.

Why is this song playing? :

Découvrez certains des attributs musicaux que Pandora utilise pour créer vos stations radio personnelles.

Don't play the song for a month :

Si vous en avez assez d'une chanson, vous pouvez mettre la chanson « au repos » et Pandora ne la lira plus pendant un mois.

Create station from this artist :

Permet de créer une station radio à partir de cet artiste.

Delete this station :

Ceci supprimera de façon permanente la station de votre compte Pandora. Au cas où vous décideriez de récréer la station avec les mêmes chansons ou les mêmes artistes, tous vos acceptations/rejets précédents seront perdus.

Create station from this song :

Permet de créer une station radio à partir de cette chanson.

Rename this station :

Vous permet de renommer la station radio actuelle.

Bookmark this artist :

Pandora marquera votre artiste préféré pour votre profil sur **www.pandora.com**.

Bookmark this song :

Pandora marquera la chanson en cours et vous permettra de toutes les acheter sur Amazon ou iTunes en une étape !

Add to My Favorites :

Permet d'ajouter une station à la liste My Favorites.

PANDORA internet radio

PANDORA, le logo PANDORA, et l'habillage commercial Pandora sont des marques commerciales ou des marques déposées de la société Pandora Media, Inc. Utilisées avec autorisation.

Utilisation de Rhapsody (Etats-Unis uniquement)

1 Utilisez ▲/▼ pour sélectionner « Sign in to your account », puis appuyez sur ENTER.

Vous devez posséder un compte pour utiliser Rhapsody. Si vous ne disposez pas encore d'un compte, vous pouvez en créer un à partir de **www.rhapsody.com/onkyo**

Si vous possédez déjà un compte Rhapsody, sélectionnez « **Sign in to your account** », puis appuyez sur **ENTER**.

Saisissez votre nom utilisateur (en général votre adresse électronique) et votre mot de passe dans l'écran clavier suivant ou dans Configuration Web.

Utilisation de l'écran clavier

1. Utilisez ▲/▼/◄/► et **ENTER** pour saisir votre nom d'utilisateur et votre mot de passe.
2. Sélectionnez « **OK** ».
3. Appuyez sur **ENTER**. L'écran « **Confirm your entries** » s'affiche.
4. Appuyez sur **ENTER**.

Conseil

- Si vous souhaitez utiliser plusieurs comptes utilisateur, consultez « Utilisation de plusieurs comptes » (➔ page 1). L'identification peut être réalisée à partir de l'écran « **Users** ».

2 Utilisez ▲/▼ pour sélectionner le menu, puis appuyez sur ENTER.

Search :
Vous pouvez rechercher des morceaux par artiste, par album ou par piste.

Music Guide :
Vous pouvez lire des pistes à partir des genres,des meilleurs artistes, des meilleurs albums, des meilleures pistes, des nouveautés et des sélections du personnel.

Rhapsody Channels :
Écoutez les canaux de radio programmée par les meilleurs éditeurs de Rhapsody.

Playlists :
Permet de jouer vos listes de lecture personnelles.

My Library :
Marquez vos albums et vos pistes personnelles dans le catalogue de Rhapsody à l'aide de My Library.

Account Info :
Vérifiez les informations de votre compte.

Sign Out :
Déconnectez-vous de votre compte Rhapsody.

3 Utilisez ▲/▼ pour sélectionner un canal, puis appuyez sur ENTER ou ► pour démarrer la lecture.

La lecture débute et l'écran de lecture s'affiche.

Vous pouvez contrôlez les pistes avec les touches sur la télécommande.

Boutons activés : ►, ❚❚, ■, ◄◄, ►►, I◄◄, ►►I, **RANDOM**, **REPEAT**

Remarque

- Sur les canaux Rhapsody, certaines touches ne fonctionnent pas.

Eléments du menu

Add track to My Library :
Marquez les pistes en cours de lecture.

Add album to My Library :
Marquez les albums en cours de lecture.

Add playlist to My Library :
Marquez les listes de lecture en cours de lecture.

Add channel to My Channels :
Marquez les canaux de radio Rhapsody en cours de lecture.

Add to My Favorites :
Permet d'ajouter une piste, un canal ou une liste de lecture à la liste My Favorites.

Conseil

- Vous pouvez supprimer des pistes, des albums et des canaux Rhapsody marqués de My Library.

Utilisation de SiriusXM Internet Radio (Amérique du Nord uniquement)

Votre ampli-tuner AV Onkyo comprend un essai gratuit de SiriusXM Internet Radio. L'écran « Account Info » affiche le nombre de jours restants dans votre essai. Une fois la période d'essai expirée, si vous souhaitez continuer à écouter le service, vous devez vous abonner. Pour vous inscrire, accédez à l'adresse **www.siriusxm.com/internetradio** à l'aide de votre ordinateur.

Lorsque vous vous inscrivez, vous devez fournir un nom est un mot de passe utilisateur qui doivent être saisis dans l'ampli-tuner AV.

Pour utiliser SiriusXM Internet Radio, l'ampli-tuner AV doit être connecté à Internet. Suivez les étapes ci-dessous à l'aide de la télécommande :

1 Utilisez ▲/▼ pour sélectionner « Sign In », puis appuyez sur ENTER.

Si vous possédez déjà un compte SIRIUS, vous pouvez y accéder en sélectionnant « **Sign In** ». Saisissez votre nom utilisateur et votre mot de passe dans l'écran clavier suivant ou dans Configuration Web. Si vous ne connaissez pas votre nom d'utilisateur ou votre mot de passe, appelez Sirius XM au (888) 539-7474 pour obtenir une assistance.

Conseil

- Si vous souhaitez utiliser plusieurs comptes utilisateur, consultez « Utilisation de plusieurs comptes » (➔ page 1). L'identification peut être réalisée à partir de l'écran « **Users** ».

■ Utilisation de l'écran clavier

1. Utilisez ▲/▼/◄/► et **ENTER** pour saisir votre nom d'utilisateur et votre mot de passe.
2. Sélectionnez « **OK** ».
3. Appuyez sur **ENTER**. L'écran « **Confirm your entries** » s'affiche.
4. Appuyez sur **ENTER**.

« **Please wait...** » s'affiche, puis l'écran « **SiriusXM Internet Radio** » affiche la catégorie que vous pouvez sélectionner.

2 Utilisez ▲/▼ pour sélectionner la catégorie, puis appuyez sur ENTER.

L'écran de la liste des canaux de la catégorie sélectionnée s'affiche.

3 Utilisez ▲/▼ pour sélectionner le canal de votre choix, puis appuyez sur ENTER.

L'écran de lecture du canal sélectionné s'affiche et vous pouvez écouter SiriusXM Internet Radio.

Vous pouvez contrôlez les pistes avec les touches sur la télécommande.

Boutons activés : ■, ❚❚, |◄◄, ►►|

■ Eléments du menu

Add to My Favorites :

Permet d'ajouter un canal à la liste My Favorites.

SiriusXM INTERNET RADIO

Les abonnements SiriusXM Internet Radio sont vendus séparément et sont subordonnés par les conditions Sirius (voir www.sirius.com). Assurez-vous de lire cet accord avant d'acquérir votre abonnement. Sirius, XM et tous les logos et marques afférents sont des marques déposées de Sirius XM Radio Inc. et de ses filiales. Tous droits réservés.

Utilisation de la webradio Last.fm

Last.fm un service de musique qui apprend ce que vous aimez…

Votre nouvel ampli-tuner AV Onkyo est très intelligent. Si vous avez un compte Last.fm gratuit, il garde une trace de toutes les chansons que vous avez juste jouées. Quand vous vous rendez sur le site Web de Last.fm, vous pouvez voir les graphiques personnels de la musique que vous avez appréciée, les partagez avec vos amis et également voir ce qu'ils aiment.

Avec des milliers de biographies, de revues et un choix infini de stations de radio personnalisées et sans pub, Last.fm est excellent moyen de découvrir de la musique. Créez aujourd'hui votre compte Last.fm gratuit sur www.last.fm/join

Inscrivez-vous et vous pourrez apprécier le meilleur de la radio sans pub Last.fm sur votre ampli-tuner AV Onkyo sans ordinateur !

Recommended Radio :
Découvrez les recommandations personnalisées futées qui changent en même temps que vos goûts.

Artist Radio :
Sélectionnez n'importe quel artiste et nous vous jouerons une station entière de musique inspirée par votre choix.

My Library :
Reposez-vous de retour et appréciez les sélections à partir de toute la musique que vous avez entendue depuis que vous avez joint Last.fm.

Tag Radio :
Funk polonaise ? Death pop ? Pensez à un style et nous vous divertirons avec pendant des heures.

Commencez votre essai gratuit immédiatement à la création votre compte et découvrez par vous-même ce que cela fait d'avoir la musique du monde au bouts des doigts. Les derniers prix et les informations complètes sont disponibles sur www.last.fm/subscribe

1 Utilisez ▲/▼ pour sélectionner « Sign in to your account », puis appuyez sur ENTER.

Vous possédez déjà un compte Last.fm, vous pouvez vous y connecter pour sélectionner « **Sign in to your account** ». Saisissez votre nom utilisateur et votre mot de passe dans l'écran clavier suivant.

■ Utilisation de l'écran clavier

1. Utilisez ▲/▼/◄/► et le bouton **ENTER** pour saisir votre nom d'utilisateur et votre mot de passe.
2. Sélectionnez « **OK** ».
3. Appuyez sur **ENTER**. L'écran « **Confirm your entries** » s'affiche.
4. Appuyez sur **ENTER**.

« **Please wait...** » apparait puis l'écran « **Last.fm Internet Radio** » apparait.

Conseil

- Si vous souhaitez utiliser plusieurs comptes utilisateur, consultez « Utilisation de plusieurs comptes » (➔ page 1). L'identification peut être réalisée à partir de l'écran « **Users** ».

2 Utilisez ▲/▼ pour sélectionner un menu puis appuyez sur ENTER.

Search Station :
Vous pouvez rechercher une station par artiste, par tag ou par nom d'utilisateur.

Top Artists Station :
Vous pouvez lire des pistes des artistes les mieux évalués.

Top Tags Station :
Vous pouvez lire des pistes des tags les mieux évalués.

Personal Station :
Vous pouvez lire des pistes de votre station personnalisée (« **Your Library** », « **Your Neighbourhood** » et « **Your Recommendations** »).

Profile :
Vous pouvez lire des pistes de « **Recently Listened Tracks** », « **Library** » et « **Neighbours** ».

Account Info :
Vérifiez les informations de votre compte.

Sign Out :
Pour vous déconnecter de votre compte.

3 Utilisez ▲/▼ pour sélectionner une station, puis appuyez sur ENTER ou ► pour démarrer la lecture.

La lecture débute et l'écran de lecture s'affiche.

■ Eléments du menu

I Love this track :
L'information de la piste est sauvegardée dans le serveur Last.fm, et la fréquence de lecture augmente.

Ban this track :
L'information de la piste est sauvegardée dans le serveur Last.fm, et la fréquence de lecture diminue.

Add to My Favorites :
Permet d'ajouter une station à la liste My Favorites.

■ Utilisation du contrôle Scrobbling

Utilisez ▲/▼ pour sélectionner « **Enable** », puis appuyez sur **ENTER**.

* Les services de webradio fournis par un tiers peuvent être résiliés avec ou sans préavis.
Les services de webradio peuvent ne pas être accessibles dans certaines zones.

Utilisation de Slacker Personal Radio

1 Si vous ne possédez pas de compte, créez-en un à partir du site Web de Slacker (www.slacker.com) à l'aide de votre ordinateur.

Si vous possédez déjà un compte Slacker, sélectionnez « Sign in to your account », puis appuyez sur ENTER.

L'écran clavier s'affiche. Pouvez saisir des informations à partir de la télécommande ou des touches sur l'appareil principal.

2 Si les informations que vous avez saisies ne comportent pas d'erreur, utilisez▲/▼/◄/► pour sélectionner « OK », puis appuyez sur ENTER.

L'écran de confirmation des informations du compte s'affiche.

3 Si vous ne possédez pas de compte, sélectionnez « Access without Sign In », puis appuyez sur ENTER pour utiliser une version restreinte du service.

Veuillez noter que l'utilisation est restreinte.

Conseil

- Si vous souhaitez utiliser plusieurs comptes utilisateur, consultez « Utilisation de plusieurs comptes » (➔ page 1). L'identification peut être réalisée à partir de l'écran « **Users** ».

4 Utilisez ▲/▼ pour sélectionner un élément du menu, puis appuyez sur ENTER.

Pour vous déconnecter, utilisez ▲/▼ pour sélectionner « **Sign out** » depuis cet écran, puis appuyez sur **ENTER**.

5 Utilisez ▲/▼ pour sélectionner une station, puis appuyez sur ENTER ou ► pour démarrer la lecture depuis cette station.

L'écran de lecture apparaît.

6 Vous pouvez contrôlez les pistes avec les touches sur la télécommande.

Boutons activés : ►, ❚❚, ■, ►►|

■ Eléments du menu

Rate Song as Favorite :
Permet de stocker des informations sur le serveur, et d'augmenter la probabilité que le morceau soit lu de nouveau.

Ban Song :
Permet de stocker des informations sur le serveur, et de diminuer la probabilité que le morceau soit lu de nouveau.

Ban Artist :
Permet de stocker des informations sur le serveur, et de diminuer la probabilité que les morceaux de cet artiste soient lus de nouveau.

Mark Favorite :
Permet d'ajouter la station en cours de lecture à vos favoris.

Unmark Favorite :
Permet de supprimer la station en cours de lecture de vos favoris.

Add song to Library :
Permet d'ajouter la piste en cours de lecture à votre bibliothèque.

Delete song from Library :
Permet de supprimer la piste en cours de lecture de votre bibliothèque.

Add to My Favorites :
Permet d'ajouter une station ou un morceau à la liste My Favorites.

Uso de Internet Radio

Procedimientos comunes en el menú Internet Radio

Nota

• Los servicios disponibles pueden variar de una región a otra.

1 **Pulse NET.**
Aparecerá una lista de los servicios de red y se iluminará el indicador **NET**. Si parpadea, verifique que el cable Ethernet esté firmemente conectado al receptor de AV.

2 **Seleccione el servicio deseado y pulse ENTER.**
Aparecerá la página principal del servicio seleccionado.

Uso de múltiples cuentas

El receptor de AV permite múltiples cuentas de usuario, lo que quiere decir que se puede cambiar libremente entre varios usuarios. Después de registrar las cuentas de usuario, el acceso se realiza desde la pantalla "**Users**".

1 **Pulse MENU cuando aparezca la pantalla de usuarios.**
Aparecerán los siguientes elementos del menú:
Add new user:
Remove this user:
Puede guardar una nueva cuenta de usuario o borrar una existente.

Consejo

• Algunos de los servicios no permiten el uso de múltiples cuentas de usuario.
• Puede guardar hasta 10 cuentas de usuario.
• Para cambiar entre cuentas debe antes cerrar sesión en la cuenta actual y acceder de nuevo en la pantalla "**Users**".

Pandora® Internet Radio –Primeros pasos (solo EE.UU.) 2
Uso de Rhapsody (sólo EE.UU.) 3
Uso de SiriusXM Internet Radio (solo Norteamérica) 4
Uso de Last.fm Internet Radio 5
Uso de Slacker Personal Radio 6

Pandora® Internet Radio –Primeros pasos (solo EE.UU.)

Pandora es un servicio de radio por Internet gratuito y personalizado que reproduce la música que usted conoce y le ayudará a descubrir música que le encantará.

1 Utilice ▲/▼ para seleccionar "I have a Pandora Account" o "I'm new to Pandora" y luego pulse ENTER.

Si no conoce Pandora seleccione "**I'm new to Pandora**". Verá un código de activación en la pantalla del televisor. Tome nota de este código. Vaya a un ordenador conectado a Internet y dirija el navegador a **www.pandora.com/onkyo**

Introduzca su código de activación y siga las instrucciones para crear su cuenta de Pandora y sus emisoras de radio por Internet personalizadas de Pandora. Puede crear sus propias emisoras introduciendo sus canciones y artistas favoritos cuando aparezca la solicitud correspondiente. Una vez creada su cuenta y sus emisoras, puede regresar al receptor Onkyo y pulsar Enter para empezar a escuchar su radio por Internet personalizada de Pandora.

Si ya dispone de una cuenta de Pandora, puede añadirla al receptor Onkyo seleccionando "**I have a Pandora Account**" e iniciando la sesión con su dirección de correo electrónico y contraseña.

Consejo

- Si desea utilizar múltiples cuentas de usuario, consulte "Uso de múltiples cuentas" (➔ página 1). Se puede iniciar sesión desde la pantalla "**Users**".

2 Utilice ▲/▼ para seleccionar la emisora en la lista de emisoras y luego pulse ENTER.

Se inicia la reproducción y aparece la pantalla de reproducción.

Create a New Station:

Introduzca el nombre de una canción, artista o género; Pandora creará una emisora de radio exclusiva para usted basada en las cualidades musicales de esa canción, de ese artista o de ese género.

■ Elementos del menú

I like this song:

Si aprueba (pulgar arriba) una canción, Pandora reproducirá más música parecida.

I don't like this song:

Si no aprueba (pulgar abajo) la canción, Pandora eliminará dicha canción de la emisora actual.

Why is this song playing?:

Descubra algunos de los atributos musicales que Pandora utiliza para crear sus emisoras de radio personalizadas.

Don't play the song for a month:

Si se cansa de una canción, puede "silenciarla" de modo que Pandora no la reproduzca durante un mes.

Create station from this artist:

Crea una emisora de radio a partir de este artista.

Delete this station:

Esto eliminará de forma permanente una emisora de su cuenta de Pandora. Toda la información sobre sus aprobaciones / desaprobaciones se perderá si quiere volver a crear la emisora con la misma canción o artista.

Create station from this song:

Crea una emisora de radio a partir de esta canción.

Rename this station:

Le permite renombrar la emisora de radio actual.

Bookmark this artist:

Pandora marcará su artista favorito para su perfil en **www.pandora.com**.

Bookmark this song:

Pandora marcará la canción actual y le permitirá comprarlas todas en Amazon o iTunes con un solo paso.

Add to My Favorites:

Añade una emisora a la lista Mis favoritos.

PANDORA internet radio

PANDORA, el logotipo de PANDORA logo, y la imagen corporativa de Pandora son marcas comerciales o marcas comerciales registradas de Pandora Media, Inc. Uso con permiso.

Uso de Rhapsody (sólo EE.UU.)

1 Utilice ▲/▼ para seleccionar "Sign in to your account" y luego pulse ENTER.

Para utilizar Rhapsody, necesitará una cuenta. Si todavía no tiene una, puede crear una nueva en **www.rhapsody.com/onkyo**

Si ya tiene una cuenta Rhapsody, seleccione "**Sign in to your account**" y pulse **ENTER**.

Escriba su nombre de usuario (normalmente el correo electrónico) y contraseña en la pantalla de teclado que aparece a continuación o en la configuración web.

■ Utilización de la pantalla de teclado

1. Utilice ▲/▼/◄/► y **ENTER** para introducir su nombre de usuario y su contraseña.
2. Seleccione "**OK**".
3. Pulse **ENTER**. Aparecerá la pantalla "**Confirm your entries**".
4. Pulse **ENTER**.

Consejo

- Si desea utilizar múltiples cuentas de usuario, consulte "Uso de múltiples cuentas" (➔ página 1). Se puede iniciar sesión desde la pantalla "**Users**".

2 Utilice ▲/▼ para seleccionar el menú y luego pulse ENTER.

Search:

Puede buscar música por artista, álbum o canción.

Music Guide:

Puede reproducir canciones por géneros, artistas principales, álbumes principales o canciones principales, novedades, selección del sitio.

Rhapsody Channels:

Escuche las emisoras de radio programadas por los principales redactores de Rhapsody.

Playlists:

Reproduzca sus listas personales.

My Library:

Marque sus álbumes y canciones preferidas en el catálogo de Rhapsody, usando Mi biblioteca.

Account Info:

Confirme los datos de su cuenta.

Sign Out:

Salga de su cuenta Rhapsody.

3 Utilice ▲/▼ para seleccionar una emisora y luego pulse ENTER o ► para iniciar la reproducción.

Se inicia la reproducción y aparece la pantalla de reproducción.

Puede controlar las pistas con los botones del mando a distancia.

Botones activados: ►, ❚❚, ■, ◄◄, ►►, I◄◄, ►►I, **RANDOM**, **REPEAT**

Nota

- En Rhapsody Channels, algunos de los botones no funcionan.

■ Elementos del menú

Add track to My Library:

Marca las canciones que se están reproduciendo actualmente.

Add album to My Library:

Marca los álbumes que se están reproduciendo actualmente.

Add playlist to My Library:

Marca las listas de reproducción que se están reproduciendo actualmente.

Add channel to My Channels:

Marca las emisoras de Rhapsody que se están reproduciendo actualmente.

Add to My Favorites:

Añade una canción, emisora o lista de reproducción a la lista Mis favoritos.

Consejo

- Puede eliminar las canciones, los álbumes y las emisoras de Rhapsody marcados de Mi biblioteca.

Uso de SiriusXM Internet Radio (solo Norteamérica)

Su receptor de AV Onkyo incluye una prueba gratuita de SiriusXM Internet Radio. La pantalla "Account Info" muestra los días que quedan de la prueba. Una vez que termine el periodo de prueba, si desea seguir escuchando este servicio, deberá contratarlo. para suscribirse vaya a **www.siriusxm.com/internetradio** con su ordenador.

Cuando se suscriba, recibirá un nombre de usuario y una contraseña que deberá introducir en el receptor de AV.

Para poder utilizar SiriusXM Internet Radio, el receptor de AV debe estar conectado a internet. Para usar el mando a distancia, siga este procedimiento:

1 Utilice ▲/▼ para seleccionar "Sign In", y luego pulse ENTER.

Si ya tiene una cuenta SIRIUS, puede acceder seleccionando "**Sign In**". Escriba su nombre de usuario y contraseña en la pantalla de teclado que aparece a continuación o en la configuración web. Si no sabe su nombre de usuario o la contraseña, llame a Sirius XM al número (888) 539-7474 para solicitar asistencia.

Consejo

- Si desea utilizar múltiples cuentas de usuario, consulte "Uso de múltiples cuentas" (➔ página 1). Se puede iniciar sesión desde la pantalla "**Users**".

■ Utilización de la pantalla de teclado

1. Utilice ▲/▼/◄/► y **ENTER** para introducir su nombre de usuario y su contraseña.
2. Seleccione "**OK**".
3. Pulse **ENTER**. Aparecerá la pantalla "**Confirm your entries**".
4. Pulse **ENTER**.

Aparecerá "**Please wait...**" y después la pantalla "**SiriusXM Internet Radio**", que muestra la categoría disponible para la selección.

2 Utilice ▲/▼ para seleccionar la categoría y luego pulse ENTER.

Aparece una pantalla con una lista de emisoras de la categoría seleccionada.

3 Utilice ▲/▼ para seleccionar la emisora deseada y luego pulse ENTER.

Aparecerá la pantalla de reproducción de la emisora seleccionada y ahora usted podrá escuchar SiriusXM Internet Radio.

Puede controlar las pistas con los botones del mando a distancia.

Botones activados: ■, ❚❚, |◄◄, ►►|

■ Elementos del menú

Add to My Favorites:

Añade una emisora a la lista Mis favoritos.

SiriusXM INTERNET RADIO

Las suscripciones a SiriusXM Internet Radio se venden por separado y se rigen por las condiciones de Sirius (consulte www.sirius.com). Lea atentamente este acuerdo antes de comprar la suscripción. Sirius, XM y todas las marcas y logotipos relacionados son marcas comerciales de Sirius XM Radio Inc. y sus filiales. Todos los derechos reservados.

Uso de Last.fm Internet Radio

Last.fm es un servicio musical que sabe lo que le gusta...
Su nuevo receptor de AV Onkyo es muy inteligente. Si tiene una cuenta gratuita de Last.fm, hará un seguimiento de todas las canciones que acaba de escuchar. Cuando visite el sitio web de Last.fm, podrá ver listas personales de la música que ha disfrutado, compartirlas con sus amigos y también ver lo que les gusta a ellos.

Con sus miles de biografías, críticas y una infinita variedad de emisoras de radio personalizadas y sin publicidad, Last.fm es una forma excelente de descubrir música. Cree hoy mismo una cuenta gratuita de Last.fm en www.last.fm/join

Si se suscribe podrá disfrutar de lo mejor de Last.fm Radio sin anuncios en su receptor de AV Onkyo sin necesidad de un ordenador.

Recommended Radio:
Descubra nuestras interesantes recomendaciones personalizadas que se adaptan a sus gustos en cada momento.

Artist Radio:
Escoja cualquier artista y podrá escuchar una emisora de radio inspirada exclusivamente en su elección.

My Library:
Relájese y disfrute de selecciones de toda la música que ha escuchado desde que se registró en Last.fm.

Tag Radio:
¿Polish funk? ¿Death pop? Piense en un estilo y podrá escucharlo durante horas.

Pruébelo gratis ahora mismo. Cree una cuenta y verá por sí mismo lo que significa tener toda la música del mundo al alcance de sus oídos. Puede consultar los precios actualizados y toda la información que desee en www.last.fm/subscribe

1 Utilice ▲/▼ para seleccionar "Sign in to your account", y luego pulse ENTER.
Si ya tiene una cuenta de Last.fm, puede acceder a ella para seleccionar "**Sign in to your account**". Introduzca su nombre de usuario y contraseña en la siguiente pantalla de teclado.

■ Utilización de la pantalla de teclado

1. Utilice ▲/▼/◄/► y **ENTER** para introducir su nombre de usuario y su contraseña.
2. Seleccione "**OK**".
3. Pulse **ENTER**. Aparecerá la pantalla "**Confirm your entries**".
4. Pulse **ENTER**.

Aparecerá "**Please wait...**" y después la pantalla "**Last.fm Internet Radio**".

Consejo

- Si desea utilizar múltiples cuentas de usuario, consulte "Uso de múltiples cuentas" (➔ página 1). Se puede iniciar sesión desde la pantalla "**Users**".

2 Utilice ▲/▼ para seleccionar un menú y luego pulse ENTER.

Search Station:
Puede buscar emisoras por artista, etiquetas o nombre de usuario.

Top Artists Station:
Puede reproducir canciones de los artistas mejor clasificados.

Top Tags Station:
Puede reproducir canciones con las etiquetas mejor clasificadas.

Personal Station:
Puede reproducir pistas de una emisora personalizada ("**Your Library**", "**Your Neighbourhood**" y "**Your Recommendations**").

Profile:
Puede reproducir pistas de "**Recently Listened Tracks**", "**Library**" y "**Neighbours**".

Account Info:
Confirme los datos de su cuenta.

Sign Out:
Se desconecta de su cuenta.

3 Utilice ▲/▼ para seleccionar una emisora y luego pulse ENTER o ► para iniciar la reproducción.
Se inicia la reproducción y aparece la pantalla de reproducción.

■ Elementos del menú

I Love this track:
Se guarda la información sobre la canción en el servidor de Last.fm y aumenta la frecuencia con la que se reproduce.

Ban this track:
Se guarda la información sobre la canción en el servidor de Last.fm y se reduce la frecuencia con la que se reproduce.

Add to My Favorites:
Añade una emisora a la lista Mis favoritos.

■ Uso del control de scrobbling

Utilice ▲/▼ para seleccionar "**Enable**", y luego pulse **ENTER**.

* Los servicios de radio por Internet suministrados por terceros pueden cancelarse con o sin aviso previo.
Es posible que los servicios de radio por Internet no estén disponibles en algunas zonas.

Uso de Slacker Personal Radio

1 Si no tiene una cuenta, cree una en el sitio web de Slacker (www.slacker.com) con su ordenador.

Si ya tiene una cuenta de Slacker, seleccione "Sign in to your account" y pulse ENTER.

Aparecerá la pantalla de teclado. Puede introducir información desde el mando a distancia o desde el teclado de la unidad principal.

2 Si no hay errores en la información que ha introducido, utilice ▲/▼/◄/► para seleccionar "OK" y luego pulse ENTER.

Aparecerá una pantalla de confirmación de la información de la cuenta.

3 Si no tiene una cuenta, seleccione "Access without Sign In" y pulse ENTER para utilizar una versión restringida del servicio.

Tenga en cuenta que el uso estará restringido.

Consejo

- Si desea utilizar múltiples cuentas de usuario, consulte "Uso de múltiples cuentas" (➔ página 1). Se puede iniciar sesión desde la pantalla "**Users**".

4 Utilice ▲/▼ para seleccionar un menú y luego pulse ENTER.

Para salir, utilice ▲/▼ para seleccionar "**Sign out**" en esta pantalla y luego pulse **ENTER**.

5 Utilice ▲/▼ para seleccionar una emisora y luego pulse ENTER o ► para iniciar la reproducción de la emisora.

Aparecerá la pantalla de reproducción.

6 Puede controlar las pistas con los botones del mando a distancia.

Botones activados: ►, ❚❚, ■, ►►|

■ Elementos del menú

Rate Song as Favorite:
Guarda información en el servidor, haciendo que sea más probable que la canción se vuelva a reproducir.

Ban Song:
Guarda información en el servidor, haciendo que sea menos probable que la canción se vuelva a reproducir.

Ban Artist:
Guarda información en el servidor, haciendo que sea menos probable que las canciones de este artista se vuelvan a reproducir.

Mark Favorite:
Añade la emisora que se está reproduciendo actualmente a los favoritos.

Unmark Favorite:
Elimina la emisora que se está reproduciendo actualmente de los favoritos.

Add song to Library:
Añade la canción que se está reproduciendo actualmente a su biblioteca.

Delete song from Library:
Elimina la canción que se está reproduciendo actualmente de la biblioteca.

Add to My Favorites:
Añade una emisora o canción a la lista Mis favoritos.

SN 29401189B
(C) Copyright 2012 Onkyo Sound & Vision Corporation Japan. All rights reserved.

Y1203-2

29401189B

Using Internet Radio

Common Procedures in Internet Radio Menu

Note

• Available services may vary depending on the region.

1 **Press NET.**
A list of the network services appears, and the **NET** indicator lights. If it flashes, verify that the Ethernet cable is firmly connected to the AV receiver.

2 **Select the desired service and press ENTER.**
The top page of the selected service appears.

Using Multiple Accounts

The AV receiver supports multiple user accounts, which means you can freely switch between several logins. After registering user accounts, login is performed from the "**Users**" screen.

1 **Press MENU while the Users screen is displayed.**
The following menu items appear:
Add new user:
Remove this user:
You can either store a new user account, or delete an existing one.

Tip

• Some of the services don't allow the use of multiple user accounts.
• You can store up to 10 user accounts.
• To switch between accounts you must first log out from the current account, and log in again on the "**Users**" screen.

Using Last.fm Internet Radio 2

Using Last.fm Internet Radio

Last.fm is a music service that learns what you love...
Your new Onkyo AV receiver is very clever. If you have a free Last.fm account, it will keep track of all the songs you've just played. When you visit the Last.fm website, you can see personal charts of the music you've enjoyed, share them with friends and see what they like, too.

With thousands of biographies, reviews and an endless choice of personalised, ad-free radio stations, Last.fm is a great way to discover music. Pick up your free Last.fm account today at www.last.fm/join

UK and Germany only:
Get a subscription and you can enjoy the best of ad-free Last.fm Radio on your Onkyo AV receiver without a computer!
Recommended Radio:
Discover smart personalised recommendations that adapt as your tastes change.
Artist Radio:
Pick any artist and we'll play you a whole station of music inspired by your choice.
My Library:
Sit back and enjoy selections from all the music you've heard since you joined Last.fm.
Tag Radio:
Polish funk? Death pop? Think of a style and we'll entertain you with it for hours.

Start your free trial straight away when you create your account and see for yourself what it's like to have the world's music at your fingertips. Latest prices and full information are available at www.last.fm/subscribe

1 Use ▲/▼ to select "Sign in to your account", and then press ENTER.
If you have the existing Last.fm account, you can sign in to your account to select "**Sign in to your account**". Enter your user name and password in the next keyboard screen.

■ Using the keyboard screen

1. Use ▲/▼/◄/► and the **ENTER** to enter your user name and password.
2. Select "**OK**".
3. Press **ENTER**. The "**Confirm your entries**" screen appears.
4. Press **ENTER**.

"**Please wait...**" appears and then "**Last.fm Internet Radio**" screen appears.

Tip

- If you want to use multiple user accounts, see "Using Multiple Accounts" (➔ page 1). Login can be made from the "**Users**" screen.

2 Use ▲/▼ to select menu and then press ENTER.
Search Station:
You can search station by Artist, Tag, or User Name.
Top Artists Station:
You can play tracks of top-rated artists.
Top Tags Station:
You can play tracks of top-rated tags.
Personal Station:
You can play tracks from personalized station ("**Your Library**", "**Your Neighbourhood**" and "**Your Recommendations**").
Profile:
You can play tracks from "**Recently Listened Tracks**", "**Library**" and "**Neighbours**".
Account Info:
Confirm your account information.
Sign Out:
It signs out from your account.

3 Use ▲/▼ to select a station, and press ENTER or ► to start playback.
Playback starts and the playback screen appears.
Enabled buttons: ►, ■, ►►I

■ Menu Items

I Love this track:
Track information is saved in Last.fm server, and playback frequency increases.
Ban this track:
Track information is saved in Last.fm server, and playback frequency reduces.
Add to My Favorites:
Adds a station to My Favorites list.

■ Using scrobbling control

Use ▲/▼ to select "**Enable**", and then press **ENTER**.

* Internet radio services provided by a third party may be terminated with or without notice.
Internet radio services may not be available in some areas.

Internetradio verwenden

Allgemeine Verfahren bei den Internetradio-Menüs

Anmerkung

• Die verfügbaren Dienste sind länderabhängig verschieden.

1 **Drücken Sie NET.**
Es erscheint eine Liste der Netzwerkdienste und die **NET**-Anzeige leuchtet. Wenn sie blinkt, überprüfen Sie ob das Ethernet-Kabel fest im AV-Receiver eingesteckt ist.

2 **Wählen Sie den gewünschten Service aus und drücken Sie ENTER.**
Die oberste Seite des ausgewählten Services erscheint.

Verwendung mehrerer Konten

Der AV-Receiver unterstützt mehrere Nutzerkonten, was bedeutet, dass Sie frei zwischen mehreren Logins umschalten können. Nach der Anmeldung der Nutzerkonten wird das Login vom „**Users**“ Bildschirm aus vorgenommen.

1 **Drücken Sie MENU während der Bildschirm des Nutzers angezeigt wird.**
Das folgende Menü erscheint:
Add new user:
Remove this user:
Sie können entweder ein neues Nutzerkonto abspeichern oder ein bestehendes löschen.

Tipp

• Einige dieser Dienstleistungen lassen keine mehrfachen Nutzerkonten zu.
• Sie können bis zu 10 Nutzerkonten speichern.
• Um zwischen den Konten umzuschalten, müssen Sie sich zuerst aus Ihrem aktuellen Konto ausloggen und sich dann wieder auf dem „**Users**“ Bildschirm einloggen.

Verwendung von Last.fm Internet Radio 2

Verwendung von Last.fm Internet Radio

Last.fm ist ein Musikdienst, der sich Ihre Lieblingsmusik merkt...

Ihr neuer Onkyo AV-Receiver ist äußerst clever. Wenn Sie ein kostenloses Last.fm-Konto eingerichtet haben, werden darin alle kürzlich abgespielten Titel gespeichert. Wenn Sie die Last.fm-Website besuchen, können Sie Ihre persönlichen Charts der von Ihnen abgespielten Musik anzeigen; teilen Sie diese mit Freunden und sehen Sie auch, welche Musik Ihre Freunde mögen.

Mit tausenden von Biografien, Rezensionen und einer schier endlosen Auswahl an persönlich angepassten, werbefreien Radiosendern ist Last.fm eine großartige Gelegenheit, um Musik zu entdecken. Holen Sie sich Ihr kostenloses Last.fm-Konto noch heute unter www.last.fm/join

Nur für Großbritannien und Deutschland:
Holen Sie sich ein Abonnement und Sie können auch ohne Computer die besten werbefreien Last.fm-Radiosender auf Ihrem Onkyo AV-Receiver hören!

Recommended Radio:
Entdecken Sie smarte, persönlich angepasste Empfehlungen, die sich mit Ihrem Musikgeschmack verändern.

Artist Radio:
Wählen Sie einen beliebigen Interpreten und wir spielen für Sie einen ganzen Radiosender mit durch Ihre Wahl inspirierter Musik.

My Library:
Lehnen Sie sich zurück und erfreuen Sie sich an einer Auswahl aller Musik, die Sie seit Ihrer Mitgliedschaft bei Last.fm gehört haben.

Tag Radio:
Polish Funk? Death Pop? Denken Sie an einen Musikstil und wir unterhalten Sie stundenlang damit.

Starten Sie Ihr kostenloses Probeabo direkt wenn Sie Ihr Konto erstellen und finden Sie selbst heraus wie es ist, jederzeit die Musik der ganzen Welt abrufen zu können. Die aktuellen Nutzungspreise und umfassende Infos sind unter www.last.fm/subscribe erhältlich

1 Verwenden Sie ▲/▼, um „Sign in to your account“ auszuwählen und dann drücken Sie ENTER.

Wenn Sie über einen bestehenden Last.fm Konto verfügen, können Sie sich anmelden und „**Sign in to your account**“ wählen. Geben Sie Ihre Ihre Benutzernamen und das Kennwort in der folgenden Tastaturanzeige ein.

■ Verwendung der Tastaturanzeige

1. Verwenden Sie ▲/▼/◄/► und den **ENTER**, um Ihren Nutzernamen und Passwort einzugeben.
2. Wählen Sie „**OK**“.
3. Drücken Sie **ENTER**. Die Anzeige „**Confirm your entries**“ erscheint.
4. Drücken Sie **ENTER**.

„**Please wait...**“ wird angezeigt und danach erscheint die „**Last.fm Internet Radio**“-Anzeige.

Tipp

- Falls Sie mehrere Nutzerkonten verwenden möchten, schlagen Sie bitte unter „Verwendung mehrerer Konten“ nach (➔ Seite 1). Das Login kann vom „**Users**“-Bildschirm aus erfolgen.

2 Verwenden Sie ▲/▼, um das Menü auszuwählen und dann drücken Sie ENTER.

Search Station:
Sie können einen Sender anhand Interpreten, Tags oder Benutzernamen suchen.

Top Artists Station:
Sie können Titel der am besten bewerteten Interpreten wiedergeben.

Top Tags Station:
Sie können Titel der am besten bewerteten Tags wiedergeben.

Personal Station:
Sie können Titel aus einem persönlich angepassten Sender wiedergeben („**Your Library**“, „**Your Neighbourhood**“ und „**Your Recommendations**“).

Profile:
Sie können Titel aus „**Recently Listened Tracks**“, „**Library**“ und „**Neighbours**“ wiedergeben.

Account Info:
Bestätigen Sie Ihre Kontoinformation.

Sign Out:
Zur Abmeldung aus Ihrem Konto.

3 Verwenden Sie ▲/▼, um einen Sender auszuwählen und dann drücken Sie ENTER oder ► , um die Wiedergabe zu starten.

Die Wiedergabe wird gestartet und die Wiedergabeanzeige erscheint.

Aktivierte Tasten: ►, ■, ►►|

■ Menüsymbole

I Love this track:
Titel-Informationen werden auf dem Last.fm-Server gespeichert und die Häufigkeit der Wiedergabe wird erhöht.

Ban this track:
Titel-Informationen werden auf dem Last.fm-Server gespeichert und die Häufigkeit der Wiedergabe wird verringert.

Add to My Favorites:
Fügt einen Sender zu meiner My Favorites Liste hinzu.

■ Scrobbling-Steuerung verwenden

Verwenden Sie ▲/▼, um „**Enable**“ auszuwählen und dann drücken Sie **ENTER**.

* Von Drittparteien zur Verfügung gestellte Internetradio-Dienste können unter Umständen ohne Vorankündigung eingestellt werden.
In bestimmten Gebieten sind Internetradio-Dienste eventuell nicht verfügbar.

Y1112-1

SN 29401229
(C) Copyright 2012 Onkyo Sound & Vision Corporation Japan. All rights reserved.

* 2 9 4 0 1 2 2 9 *

Remote Control Codes

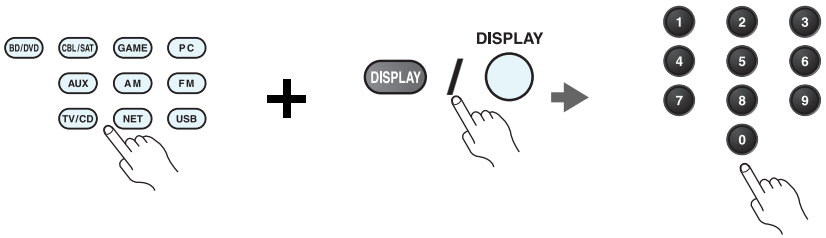

1 While holding down the REMOTE MODE button to which you want to assign a code, press and hold down [DISPLAY] (about 3 seconds).

The REMOTE MODE button/Remote indicator lights.

On Integra products, button names are capitalized. For example, “Remote Mode” button and “Display” button.

Notes:

- Remote control codes cannot be entered for [RECEIVER] and the multi zone button.
- Only TV remote control codes can be entered for [TV].
- Except for [RECEIVER], [TV], and the multi zone button, remote control codes from any category can be assigned for the REMOTE MODE buttons. However, these buttons also work as input selector buttons, so choose a REMOTE MODE button that corresponds with the input to which you connect your component. For example, if you connect your CD player to the CD input, choose [TV/CD] when entering its remote control code.

2 Within 30 seconds, use the number buttons to enter the 5-digit remote control code.

The REMOTE MODE button/Remote indicator flashes twice.

If the remote control code is not entered successfully, the REMOTE MODE button/Remote indicator will flash once slowly.

Notes:

- The flashing element of the remote controller will differ according to your AV receiver’s model.
- The remote controller is preconfigured with remote controller presets of different components. By entering a code from the Remote Control Code list, you can activate the relevant preset for that component.
- When there are multiple codes related to one manufacturer, try and enter them one-by-one until it matches your component.
- Depending on the model and year of your component, compatibility is not guaranteed.
- With some models, the remote controller may not not work or its compatibility may be limited to part of the component’s functionality.
- Besides, it is not possible to add new codes to the existing remote controller presets.
- Though the provided remote control codes are correct at the time of printing, they are subject to change by the manufacturer.

Codes de télécommande

1 **Tout en maintenant enfoncé le bouton REMOTE MODE auquel vous souhaitez associer un code, pressez et maintenez enfoncé le bouton [DISPLAY] (pendant environ 3 secondes).**

Le bouton REMOTE MODE/le témoin Remote s'allume.

Les noms de boutons sont en manjuscules sur les produits Integra. Par exemple, le bouton « Remote Mode » et le bouton « Display ».

Remarques :

- Les codes de télécommande ne peuvent pas être entrés pour [RECEIVER] et le bouton multi zone.
- Seul les code de télécommande de téléviseurs peuvent être entrés pour [TV].
- À l'exception de [RECEIVER], [TV] et du bouton multi zone, vous pouvez affecter des codes de télécommande de n'importe quelle catégorie pour les boutons REMOTE MODE. Cependant, ces boutons font également office de bouton de sélecteur d'entrée : par conséquent, choisissez un bouton REMOTE MODE correspondant à l'entrée à laquelle vous souhaitez raccorder votre appareil. Par exemple, si vous raccordez votre lecteur CD à l'entrée CD, choisissez [TV/CD] lorsque vous saisissez le code de télécommande.

2 **Vous disposez de 30 secondes pour saisir le code de télécommande à cinq chiffres à l'aide des boutons numérotés.**

Le bouton REMOTE MODE/le témoin Remote clignote deux fois.

Si le code de télécommande n'a pas été saisi correctement le bouton REMOTE MODE/l'indicateur Remote ne clignote qu'une seule fois.

Remarques :

- L'élément clignotant de la télécommande différera selon le modèle de votre ampli-tuner AV.
- La télécommande est préconfigurée avec des préréglages de télécommande de différents appareils. En entrant un code de la liste des codes de télécommandes, vous pouvez activer le préréglage approprié pour cet appreil.
- Quand il y a de multiples codes liés à un fabricant, essayez-les et entrez-les un par un jusqu'à ce que cela corresponde à votre appareil.
- Selon le modèle et l'année de votre appareil, la compatibilité n'est pas garantie.
- Avec certains modèles, la télécommande peut ne pas fonctionner ou sa compatibilité peut être limitée à une partie de la fonctionnalité de l'appareil.
- En outre, il n'est pas possible d'ajouter de nouveaux codes aux préréglages de télécommande existants.
- Bien que les codes de télécommande fournis soient corrects au moment de l'impression de la liste, ils sont susceptibles d'être modifiés par le fabricant.

Códigos de control remoto

1 **Manteniendo pulsado el botón REMOTE MODE para el cual desea introducir un código, pulse y mantenga presionado el botón [DISPLAY] (aproximadamente 3 segundos).**

Se iluminará el botón REMOTE MODE/indicador Remote.

En los productos Integra, los nombres de los botones aparecen con mayúsculas. Por ejemplo, el botón "Remote Mode" y el botón "Display".

Notas:

- No podrán introducirse códigos de mando a distancia para [RECEIVER] y el botón multizona.
- Únicamente podrán introducirse códigos de mando a distancia de televisor para el botón [TV].
- Con la excepción de [RECEIVER], [TV] y el botón multizona, se pueden asignar códigos de mando a distancia de cualquier categoría a los botones de REMOTE MODE. No obstante, estos botones también pueden funcionar como botones de selector de entrada; por tanto, seleccione un botón REMOTE MODE que se corresponda con la entrada a la cual está conectado el componente. Por ejemplo, si conecta un reproductor de CD a la entrada de CD, seleccione [TV/CD] cuando introduzca su código de mando a distancia.

2 **Antes de que transcurran 30 segundos, utilice los botones numéricos para introducir el código de mando a distancia de 5 dígitos.**

El botón REMOTE MODE/indicador Remote parpadeará dos veces.

Si el código de mando a distancia no se introduce correctamente, el botón REMOTE MODE/indicador Remote parpadeará una vez despacio.

Notas:

- El parpadeo del mando distancia será distinto según el modelo de receptor de AV.
- El mando a distancia está preconfigurado con los ajustes predeterminados de los distintos componentes. Al introducir un código de la lista de códigos del mando a distancia se puede activar el ajuste predeterminado de ese componente.
- Cuando hay múltiples códigos relacionados con un fabricante, pruebe a introducirlos uno a uno hasta que coincida con su componente.
- Dependiendo del modelo y el año de su componente, la compatibilidad no está garantizada.
- Con algunos modelos, es posible que el mando a distancia no funcione o que su compatibilidad esté limitada a una parte de las funciones del componente.
- Además, no es posible añadir nuevos códigos a los ajustes predeterminados existentes del mando a distancia.
- Los códigos de mando a distancia suministrados son correctos en el momento de la impresión, pero el fabricante puede realizar cambios.

Codici del telecomando

1 Tenendo premuto il tasto REMOTE MODE al quale si desidera assegnare il codice, premere e tenere premuto [DISPLAY] (per circa 3 secondi).

Il tasto REMOTE MODE/l'indicatore Remote si accende.

Sui prodotti Integra, i nomi dei tasti sono scritti con l'iniziale maiuscola. Ad esempio, tasto “Remote Mode” e tasto “Display”.

Note:

- I codici di controllo del telecomando non possono essere inseriti per [RECEIVER] e i tasti multi zona.
- Per [TV] è possibile immettere solo codici telecomando del televisore.
- Tranne che per [RECEIVER], [TV], e per il tasto multi zona, è possibile assegnare codici di controllo di ogni categoria per i tasti REMOTE MODE. Tuttavia, tali tasti fungono anche da tasti del selettore d'ingresso, quindi scegliere un tasto REMOTE MODE che corrisponda all'ingresso al quale viene collegato il dispositivo. Per esempio, se si collega il lettore CD all'ingresso CD, scegliere il [TV/CD] quando si immette il relativo codice telecomando.

2 Entro 30 secondi utilizzare i tasti numerici per inserire il codice telecomando a 5 cifre.

Il tasto REMOTE MODE/l'indicatore Remote lampeggia due volte.

Se il codice telecomando non viene inserito correttamente, il tasto REMOTE MODE/l'indicatore Remote lampeggia lentamente una volta.

Note:

- L'elemento lampeggiante del telecomando varia a seconda del modello del ricevitore AV.
- Il telecomando è preconfigurato con preselezioni per diversi apparecchi. Inserendo un codice dall'elenco dei codici telecomando, è possibile attivare la relativa preselezione per tale apparecchio.
- Se sono presenti più codici relativi allo stesso produttore, provare a inserirli uno a uno finché non si arrivi al codice corrispondente dell'apparecchio.
- A seconda del modello e dell'anno dell'apparecchio, la compatibilità non è garantita.
- Con alcuni modelli, il telecomando può non funzionare o la sua compatibilità può essere limitata a una parte della funzionalità dell'apparecchio.
- Inoltre, non è possibile aggiungere nuovi codici alle preselezioni esistenti del telecomando.
- I codici telecomando specificati sono validi alla data della stampa del presente documento, ma sono soggetti a variazioni da parte del produttore.

Fernbedienungscodes

1 Halten Sie die REMOTE MODE-Taste gedruckt, fur die Sie den Code eingeben mochten, und drucken Sie (ca. 3 Sekunden lang) die [DISPLAY]-Taste.

Die REMOTE MODE-Taste/Remote-Anzeige leuchtet.

Bei den Integra-Produkten werden die Namen der Tasten groß geschrieben. Zum Beispiel „Remote Mode“ (Fernbedienungsmodus)-Taste und „Display“-Taste.

Hinweise:

- Der Fernbedienungscode kann nicht [RECEIVER] und der Multi-Zonen-Taste zugeordnet werden.
- Der Taste [TV] können nur Fernbedienungscodes für einen Fernseher zugeordnet werden.
- Abgesehen von [RECEIVER], [TV] und der Multi-Zone-Taste, können die Fernbedienungscodes jeder Kategorie den REMOTE MODE-Tasten zugewiesen werden. Allerdings dienen diese Tasten auch als Quellenwahltasten. Wählen Sie also nach Möglichkeit eine REMOTE MODE-Taste, die dem Eingang zugeordnet ist, an den Sie die betreffende Quelle angeschlossen haben. Wenn Sie z.B. einen CD-Player an den CD-Eingang anschließen, sollten Sie [TV/CD] wenn Sie den Fernbedienungscode eingeben.

2 Geben Sie mit den Zifferntasten innerhalb von 30 Sekunden den 5-stelligen Herstellercode ein.

Die REMOTE MODE-Taste/Remote-Anzeige blinkt zwei Mal.

Wenn der Fernbedienungscode nicht ordnungsgemäß eingegeben wurde, blinkt die REMOTE MODE-Taste/Remote-Anzeige einmal langsam.

Hinweise:

- Das blinkende Element auf der Fernbedienung unterscheidet sich je nach AV-Receiver-Modell.
- Die Fernbedienung ist mit den Voreinstellungen der Fernbedienung der verschiedenen Komponenten vorkonfiguriert. Indem ein Code aus der Liste der Fernbedienungscodes eingegeben wird, können Sie die entsprechende Voreinstellung für die Komponente aktivieren.
- Wenn es mehrere Codes gibt, die sich auf einen Hersteller beziehen, versuchen Sie sie einzeln einzugeben, bis einer mit Ihrer Komponente übereinstimmt.
- Dies hängt vom Modell und Herstellungsjahr Ihrer Komponente ab und die Kompatibilität ist nicht garantiert.
- Es kann sein, dass bei einigen Modellen die Fernbedienung nicht funktioniert oder ihre Kompatibilität sich auf nur auf Teile der Funktionalität der Komponente beschränkt.
- Abgesehen davon ist es nicht möglich, den bestehenden Voreinstellungen der Fernbedienung neue Codes hinzuzufügen.
- Obwohl die angegebenen Fernbedienungscodes dem Stand bei Drucklegung entsprechen, sind Änderungen durch den Hersteller vorbehalten.

Afstandsbedieningscodes

1 Houd terwijl u de REMOTE MODE toets ingedrukt houdt waarvoor u een code wilt toewijzen de [DISPLAY] toets ingedrukt (ongeveer 3 seconden).

De toets REMOTE MODE (afstandsbedieningsmodus) / Het indicatielampje afstandsbediening gaat branden.

Op producten van Integra staan de namen van de toetesn in hoofdletters. Bijvoorbeeld, de toetsen “Remote Mode” en “Display”.

Opmerkingen:

- Er kunnen geen afstandsbedieningscodes worden ingevoerd voor [RECEIVER] en de multi zone-toets.
- Alleen TV afstandsbedieningscodes kunnen worden ingevoerd voor [TV].
- Behalve voor [RECEIVER], [TV] en de multi zone-toets, kunnen afstandsbedieningscodes vanuit elke categorie worden toegewezen aan de REMOTE MODE toetsen. Deze toetsen werken overigens ook als ingangsselectortoetsen, kies dus een REMOTE MODE toets die overeenkomt met de ingang waarop u uw component wilt aansluiten. Kies indien u bijvoorbeeld uw CD-speler aansluit op de CD-ingang de [TV/CD] toets bij het invoeren van de afstandsbedieningscode.

2 Gebruik binnen 30 seconden de cijfertoetsen om de 5-cijferige afstandsbedieningscode in te voeren.

De toets REMOTE MODE (afstandsbedieningsmodus) / Het indicatielampje afstandsbediening knippert tweemaal.

Indien de afstandsbedieningscode niet met succes wordt ingevoerd, zal de toets REMOTE MODE/Remote-indicator eenmaal traag knipperen.

Opmerkingen:

- Het knippergedeelte van de afstandsbediening zal verschillen ten opzichte van het model van uw AV-receiver.
- De afstandsbediening is voorgeprogrammeerd met voorkeuzetoetsen van verschillende componenten. Door het invullen van een code uit de afstandsbediening codelijst kunt u de voorkeuzetoets voor die component activeren.
- Wanneer er meerdere codes gerelateerd zijn aan één fabrikant, probeer deze dan een voor een totdat de juiste code overeenkomt met uw component.
- Afhankelijk van het model en het bouwjaar van uw component is de compatibiliteit niet gegarandeerd.
- Bij sommige modellen werkt de afstandsbediening mogelijk niet of is de compatibiliteit ervan beperkt tot een deel van de functionaliteit van de component.
- Daarnaast is het niet mogelijk om nieuwe codes aan de bestaande voorkeuzetoetsen van de afstandsbediening toe te voegen.
- Hoewel de gegeven afstandsbedieningscodes correct zijn op het moment van afdrukken, kunnen deze door de fabrikant gewijzigd worden.

Fjärrstyrningskoder

1 Håll ned knappen för det REMOTE MODE som du vill tilldela en kod samtidigt som du trycker och håller ned [DISPLAY] (i cirka 3 sekunder).

REMOTE MODE-knapp/Fjärrindikatorlampa.

På Integra-produkter, är knappnamnens begynnelsebokstav en versal. Till exempel, ”Fjärrläge”-knapp och ”Display”-knapp.

Anmärkningar:

- Fjärrkontrollkoder kan inte anges för knapparna [RECEIVER] och flerzonsknappen.
- Endast fjärrkontrollkoder för tv kan anges för [TV].
- Förutom [RECEIVER], [TV] och flerzonsknappen, kan fjärrkontrollkoder för vilken som helst kategori tilldelas för knapparna REMOTE MODE. Dessa knappar fungerar dock även som ingångväljarknappar, så använd en knapp för REMOTE MODE som motsvarar ingången som du ansluter utrustningen till. Till exempel, om du ansluter din CD-spelare till CD-ingången ska du välja [TV/CD] när du anger dess fjärrkontrollkod.

2 Använd sifferknapparna för att ange den femsiffriga koden inom 30 sekunder.

REMOTE MODE-knapp/Fjärrindikatorlampa blinkar två gånger.

Om fjärrkontrollkoden inte ställdes in, blinkar REMOTE MODE-knappen/fjärrindikatorn långsamt en gång.

Anmärkningar:

- Det blinkande elementet på fjärrkontrollen skiljer sig åt beroende på din modell av AV-receiver.
- Fjärrkontrollen har förkonfigurerats med förvalda kanaler på fjärrkontrollen för olika komponenter. Genom att ange en kod från fjärrkontrollkodlistan, kan du aktivera relevanta förvalda kanaler för den utrustningen.
- När det finns flera olika koder för en tillverkare ska du försöka att ange dem en och en tills de stämmer överens med din utrustning.
- Beroende på utrustningens modell och årgång, går det inte att garantera kompatibilitet.
- På vissa modeller kan det hända att fjärrkontrollen inte fungerar eller så kan dess kompatibilitet vara begränsad till en del av utrustningens funktion.
- Dessutom går det inte att lägga till nya koder till fjärrkontrollens existerande förvalda kanaler.
- Även om erhållna fjärrkontrollkoder är korrekta vid tryckningen, kan de ändras av tillverkaren.

遙控代碼

1 **在按住想指定編碼的 REMOTE MODE（遙控模式）按鈕時，同時按住 [DISPLAY]（顯示）（約 3 秒）。**

REMOTE MODE（遙控模式）按鈕 / 遙控指示燈亮起。

在 Integra 系列產品上，按鈕名稱為大寫。例如，「Remote Mode」（遙控模式）按鈕和「Display」（顯示）按鈕。

注意：

- [RECEIER]（接收機）和多區域按鈕不能輸入遙控編碼。
- 您只能為 [TV]（電視）輸入電視遙控編碼。
- 除 [RECEIVER]（接收機）、[TV]（電視）和多區域按鈕外，您可針對 REMOTE MODE（遙控模式）按鈕指定任何類別的遙控編碼。但是，這些按鈕仍可用作為輸入選擇器按鈕，因此，請選擇與您設備所連接輸入接口對應的 REMOTE MODE 按鈕。例如，如果要將 CD 播放機連接到 CD 輸入源上，則需在輸入遙控編碼時選擇 [TV/CD]。

2 **在 30 秒內，使用數字按鈕輸入 5 位數的遙控編碼。**

REMOTE MODE（遙控模式）按鈕 / 遙控指示燈閃爍兩次。

如果無法成功輸入遙控編碼，REMOTE MODE（遙控模式）按鈕 / 遙控指示燈會慢慢地閃爍一次。

注意：

- 視您的 AV 接收機型號而定，遙控器的閃爍元件會有不同。
- 遙控器已預先設定有不同設備的遙控器預設值。透過輸入遙控編碼清單中的編碼，您可啟用該設備的相關預設值。
- 當有多個編碼與單一製造商相關時，請嘗試一個接著一個輸入，直到與您的設備對應為止。
- 視設備的型號和年份而定，並不保證與本公司產品相容。
- 在某些型號上，遙控器可能無法作用，或是其相容性限於部份設備功能。
- 除此之外，您無法新增編碼至現有的遙控器預設值。
- 雖然所提供之遙控編碼在本文件列印時為正確，製造商仍可能會對其作出修改。

遥控代码

1 **按住想指定编码的 REMOTE MODE（遥控模式）按钮的同时，按住 [DISPLAY（显示）]（大约 3 秒钟）。**

REMOTE MODE（遥控模式）按钮 / 遥控指示灯亮起。

Integra 产品上的按钮名称单词首字母大写。例如，“Remote Mode（遥控模式）”按钮和 “Display（显示）”按钮。

注意：

- [RECEIVER（接收机）] 和多区域按钮不能输入遥控编码。
- 只能为 [TV（电视）] 输入电视遥控编码。
- 除 [RECEIVER（接收机）]、[TV（电视）] 和多区域按钮外，不能为 REMOTE MODE（遥控模式）按钮指定任何类别的遥控编码。但是，这些按钮仍可用作输入选择器按钮，因此，选择与设备所要连接的输入端对应的 REMOTE MODE（遥控模式）按钮。例如，如果要将 CD 播放机连接到 CD 输入端，应在输入遥控编码时选择 [TV/CD（电视 /CD）]。

2 **在 30 秒内，使用数字按钮输入 5 位数的遥控编码。**

REMOTE MODE（遥控模式）按钮 / 遥控指示灯闪烁两次。

如果不能顺利输入遥控编码，REMOTE MODE（遥控模式）按钮 / 遥控指示灯会缓慢闪烁一次。

注意：

- 根据 AV 接收机产品类型的不同，遥控器闪烁元素将会不同。
- 遥控器采用不同设备的遥控器预设进行预配置。通过从遥控器编码列表输入编码，便可激活相应设备的相关预设。
- 单个制造商关联多个编码时，请尝试逐个输入，直至符合当前设备。
- 根据设备的产品类型和年份的不同，无法保证兼容性。
- 对于某些产品类型，遥控器可能无法工作或其兼容性可能受到部分设备功能性的限制。
- 此外，可能无法将新的编码追加到现有的遥控器预设。
- 尽管付印时所提供的遥控编码是正确的，但制造商会随时更改。

Dedicated Onkyo Receiver	
Default	62503
Zone 2	62506
Zone 3	62507

Cable Set Top Box	
ADB	02254, 02769
Aon	02769
Arris	02187
AT&T	00858
Bright House	01376, 01877
BT Vision	02294
Cable & Wireless	01068
Cable One	01376, 01877
Cablecom	01582
Cablevision	01376, 01877
Charter	01376, 01877, 02187
Cisco	01877, 00858, 01982, 02345, 02378
Com Hem	00817, 00660, 01666, 02015, 02447
Comcast	01376, 01877, 01982, 02187
Cox	01376, 01877
Daeryung	01877
Digeo	02187
DX Antenna	01500
France Telecom	00817
Freebox	01482
Fujitsu	01497
Humax	00660, 02142, 02447, 03051, 03053
Insight	01376, 01877
J:COM	03051, 03053
Knology	01877
Kreatel	01385
Macab	00817
Mediacom	01376, 01877

Cable Set Top Box	
mio TV	02802
Motorola	01376, 00858, 01562, 01982, 01998, 02378
Moxi	02187
NEC	01496
Neuf TV	03107
Noos	00817
NTL	01068, 01060
Numericable	02767
Ono	01068, 01562
Optus	01060
Orange	00817
Pace	01376, 01877, 01068, 01060, 01982
Panasonic	01488, 01982
Philips	00817, 01582, 02294, 02767
Pioneer	01877, 01500
RCN	01376
Rogers	01877
Sagem	00817
Samsung	01877, 01060, 01666, 02015, 02774
Scientific Atlanta	01877, 00858, 01982, 02345
SFR	03107
Shaw	01376
SingTel	01998, 02802
Sony	01460
Stofa	02015
Suddenlink	01376, 01877
Sumitomo	01500
Telewest	01068
TeliaSonera	01385
Telus	02345
Thomson	01582, 01982, 02769
Time Warner	01376, 01877, 02187

Cable Set Top Box	
Toshiba	01509
UPC	01582
Verizon	02378
Videotron	01877
Virgin Media	01068, 01060
Visiopass	00817
VTR	01376
WideOpenWest	01877
Ziggo	00660, 01666, 02015, 02142, 02447, 02774

Cable/PVR Combination	
Arris	02187
Bright House	01376, 01877
Cable One	01376, 01877
Cablevision	01376, 01877
Charter	01376, 01877, 02187
Cisco	01877, 01982
Comcast	01376, 01877, 01982, 02187
Cox	01376, 01877
Digeo	02187
Freebox	01482
Humax	02142, 03051, 03053
Insight	01376, 01877
J:COM	03051, 03053
Knology	01877
Mediacom	01376, 01877
Motorola	01376
Moxi	02187
Numericable	02767
Pace	01877
Panasonic	01982
Philips	01582, 02767
Pioneer	01877
Rogers	01877

Cable/PVR Combination	
Samsung	01877
Scientific Atlanta	01877, 01982
Shaw	01376
Suddenlink	01376, 01877
Thomson	01582
Time Warner	01376, 01877, 02187
UPC	01582
Videotron	01877
VTR	01376
WideOpenWest	01877
Ziggo	02142

IPTV	
ADB	02254, 02769
Aon	02769
AT&T	00858
BT Vision	02294
Canal+	02657
Cisco	00858, 02345, 02378
Kreatel	01385
mio TV	02802
Motorola	01376, 00858, 01998, 02378
Neuf TV	03107
Pace	02657
Scientific Atlanta	00858, 02345
SFR	03107
SingTel	01998, 02802
TeliaSonera	01385
Telus	02345
Thomson	02769
Verizon	02378

IPTV/PVR Combination	
ADB	02769
Aon	02769

IPTV/PVR Combination	
AT&T	00858
BT Vision	02294
Cisco	00858, 02345, 02378
Kreatel	01385
Motorola	00858, 02378
Neuf TV	03107
Philips	02294
Scientific Atlanta	00858
SFR	03107
Verizon	02378

CD	
Advantage	70032
AH!	70157
Aiwa	70157
Arcam	70157
Atoll Electronique	70157
Audio Research	70157
Audiolab	70157
Audiomeca	70157
Audioton	70157
AVI	70157
Balanced Audio Technology	70157
Cairn	70157
California Audio Labs	70029, 70303
Cambridge	70157
Cambridge Audio	70157
Carver	70157
CCE	70157
Cyrus	70157
Denon	70626, 70766
DKK	70000
DMX Electronics	70157
Dynaco	70157
Genexxa	70000, 70032

CD	
Goldmund	70157
Grundig	70157
Harman/Kardon	70157
Hitachi	70032
Integra	71817, 70101
JVC	70072
Kenwood	70626, 70157, 70036
Krell	70157
Linn	70157
Loewe	70157
Magnavox	70157
Marantz	70626, 70029, 70157
Matsui	70157
MCS	70029
Memorex	70032
Meridian	70157
Micromega	70157
Miro	70000
Mission	70157
Myryad	70157
NAD	70000, 70721
Naim	70157
NSM	70157
Onkyo	71817
Optimus	70000, 70032
Panasonic	70029, 70303
Philips	70626, 70157
Pioneer	70032, 70101
Polk Audio	70157
Primare	70157
Proton	70157
QED	70157
Quad	70157
Quasar	70029
Radiola	70157
RCA	70032

CD	
Restek	70157
Revox	70157
Rotel	70157
SAE	70157
Sansui	70157
SAST	70157
Siemens	70157
Silsonic	70036
Simaudio	70157
Sonic Frontiers	70157
Sony	70490, 70000
Sylvania	70157
TAG McLaren	70157
Tandy	70032
Technics	70029, 70303
Thorens	70157
Thule Audio	70157
Traxdata	70626
Universum	70157
Victor	70072
Wards	70000, 70032, 70157
Yamaha	70490, 70032, 70036
Zonda	70157

CD-R	
Denon	70626, 70766
JVC	70072
Kenwood	70626
Marantz	70626
Onkyo	71323
Philips	70626
Sony	70000

MD	
Onkyo	70868
Sony	70490, 70000

MD	
Yamaha	70490

Cassette Deck	
Aiwa	40029
Arcam	40076
Audiolab	40029
Carver	40029
Denon	40076
Grundig	40029
Harman/Kardon	40029
Inkel	40070
JVC	40244
Kenwood	40070
Magnavox	40029
Marantz	40029
Myryad	40029
Onkyo	42157
Optimus	40027
Philips	40029
Pioneer	40027
Polk Audio	40029
Radiola	40029
RCA	40027
Revox	40029
Sansui	40029
Sony	40243
Thorens	40029
Victor	40244
Wards	40027, 40029
Yamaha	40097

Accessory	
Apple	81115
Jamo	82228
Logitech	82182
Onkyo	82990, 81993, 82351

Accessory	
Polk Audio	82228

Video - Accessory	
ADB	02254, 02769
Aon	02769
Apple	02615
AT&T	00858
BT Vision	02294
Canal+	02657
Cisco	00858, 02345, 02378
Kreatel	01385
mio TV	02802
Motorola	01376, 00858, 01998, 02378
Neuf TV	03107
Pace	02657
Philips	02294
Scientific Atlanta	00858, 02345
SFR	03107
SingTel	01998, 02802
TeliaSonera	01385
Telus	02345
Thomson	02769
Verizon	02378

Receiver	
Onkyo	52503

Satellite Set Top Box	
@sat	01300
@Sky	01334
Acoustic Solutions	01284
ADB	00642, 00887, 01259
Akura	01626
Alba	01284
Allvision	01334

Satellite Set Top Box	
Amstrad	00847, 01175, 01662, 01693
Ansonic	02418
Arnion	01300
ASCI	01334
AssCom	00853
Astro	00173, 01100
Atlanta	02418
Atsat	01300
AtSky	01334
Audiola	02418
Aurora	00879, 00642, 01433
Austar	00879, 00642, 01259
Avanit	01631
Awa	02418
Axil	01413, 01457, 02418
Axitronic	01626
Balmet	01457
Bell ExpressVu	00775
Belson	02418
Big Sat	01457
Black Diamond	01284
Blaupunkt	00173
Boshmann	01413, 01631
Boston	01251
Boxer	01458
British Sky Broadcasting	00847, 01175, 01662
BskyB	00847, 01175, 01662
Bush	01284, 01291, 01626, 01645
Canal Digital	00853, 01334
Canal Satellite	00853, 02657
Canal+	00853, 02657
CanalSat	00853, 02657
Centrex	01457

Satellite Set Top Box	
CGV	01413, 01567
Chess	01334, 01626
CityCom	01176
Clatronic	01413
Clayton	01626
Com Hem	01176, 01915
Comag	01413
Comsat	01413
Coship	01457
Crown	01284
CS	01631
Cyfra+	01409
Cyfrowy Polsat	00853, 02527
D-box	00723, 01114
Dantax	01626
Denver	02418
Dgtec	01242, 01631, 02418
Dick Smith Electronics	02418
Digi Raum Electronics	01176
Digiality	01334
Digifusion	01645
Digihome	01284
DigiLogic	01284
DigiQuest	01300, 01457, 01631
Digisky	01457
DigitalBox	01100, 01631
Digiwave	01631
DirecTV	01377, 00099
Dish Network	00775
Dishpro	00775
DishTV	01300
DRE	01176
Dream Multimedia	01237
DSE	02280, 02418
DSTV	00879, 00642, 01433

Satellite Set Top Box	
Durabrand	01284
Echostar	00775, 00853, 01323, 01409, 02527
Eco-Star	01413
Edision	01631
Elap	01413, 01567
Elbe	02418
Energy Sistem	01631, 02418
Engel	01251
EuroLine	01251
Europhon	01334
Europsat	01413, 01611
Expressvu	00775
Fagor	01611
Ferguson	01291
Finlux	01626
Fly Com	01457
FMD	01413, 01457
Foxtel	00879, 01176, 01356
Freesat	02408
Fuba	00173, 01251
Galaxis	00853, 00879
General Satellite	01176
Globo	01251, 01334, 01626
GOI	00775
Gold Box	00853
Gold Vision	01631
GoldMaster	01334
Goodmans	01284, 01291
Gradiente	00099, 00887
Grandin	01626
Grocos	01409, 01457
Grundig	00847, 00853, 00173, 00879, 01284, 01291
Haier	02418
Hallo	01626

Satellite Set Top Box	
Hama	01567
Hanseatic	01100
Hirschmann	00173
Hitachi	01284
Hornet	01300
HTS	00775
Humax	01377, 01176, 01427, 01675, 01808, 01882, 01915, 02144, 02408, 02616
ID Digital	01176
ID Sat	01334
ILLUSION sat	01631
Imperial	01195, 01334
Indovision	00887
iNETBOX	01237
Inno Hit	01626
Innova	00099
inVion	02418
iotronic	01413
ISkyB	00887
ITT	02418
ITT Nokia	00723
Jadeworld	00642
Jaeger	01334
JVC	00775
KabelBW	01195, 01882, 01915
Kaon	01300
Kathrein	00173, 01561, 01567
Kenwood	00853
Koenig	01631
Kreiling	01626
Kreiselmeyer	00173
L&S Electronic	01334
LaSAT	00173
Lava	01631

Satellite Set Top Box	
Leiko	01626
Lemon	01334
Lenoxx	01611
Linsar	01284
Listo	01626
Lodos	01284
Logik	01284
Macab	00853
Manhattan	01300
Maspro	00173
Matsui	00173, 01284, 01626
Maximum	01334
Mediabox	00853
Mediacom	01206
MediaSat	00853
Medion	01334, 01626
MegaSat	01631
Metronic	01334, 01413, 01631, 02418
Metz	00173
Moserbaer	01251
Movistar	02527, 02761
Multichoice	00879, 00642, 01433, 02059, 02060
MySky	01356, 01693, 01850
NEOTION	01334
Netsat	00099, 00887
Nikko	00723
Nokia	00853, 00723, 01223
Nordmende	01611
NPG	01631
Onn	01284
Optex	01413, 01611, 01626
Optus	00879, 01356
Orbis	01334
Orbitech	01100, 01195

Satellite Set Top Box	
Pace	00847, 00853, 00887, 01175, 01323, 01356, 01423, 01662, 01693, 01850, 02059, 02060, 02211, 02657
Pacific	01284
Palcom	01409, 01611
Panasat	00879, 01433
Panasonic	00847, 01304, 01404, 03099
Panda	00173
Pass	01567
peeKTon	01457, 02418
Philips	00099, 00853, 00173, 01114, 00887, 00133, 02211
Phoenix	02418
Pino	01334
Pioneer	00853, 01308
PMB	01611
Premiere	00723
Pro Basic	00853
Proline	01284
QNS	01404
RCA	01291
Regal	01251
Roadstar	00853
Rollmaster	01413
Rownsonic	01567
SAB	01251, 01300, 01631
Sagem	01114
Saivod	02418
Samsung	01377, 00853, 01175, 01206, 01458, 01662, 02986
Sansui	01251
Sanyo	01626
Sat Control	01300

Satellite Set Top Box	
Sat Industrie	01611
SAT+	01409
Satplus	01100
SatyCon	01631
Schaub Lorenz	02418
Schneider	01206, 01251
Schwaiger	01334, 01457, 01631
Sedea Electronique	01206, 01626
SEG	01251, 01284, 01626
Servimat	01611
ServiSat	01251
Shark	01631
Sherwood	01409
Siemens	00173, 01334, 01626, 02418
Sigmatek	02418
SKY	00099, 00847, 00887, 01175, 01662, 01693, 01850, 02754
SKY Brazil	00887
SKY Deutschland	02754
SKY Italia	00853, 01693, 01850
SKY New Zealand	02211
SKY PerfecTV!	02299, 02616, 03099
Sky XL	01251
Sky+	01175, 01662
Skymaster	01334, 01409, 01567, 01611
Skymax	01413
Skyplus	01175, 01334
SkySat	01100
Skyvision	01334
SM Electronic	01409
Smart	01404, 01413, 01631
SmartVision	01457
Sony	00847, 00853, 01558, 02299

Satellite Set Top Box	
Star	00887
Stream System	01300
Strong	00853, 00879, 01284, 01300, 01409, 01626, 02418
Sunny	01300
Sunstar	00642
Supernova	00887
Supratech	01413
Systec	01334
Sytech	02418
TBoston	01251, 02418
Teac	01251
Technical	01626
Technika	01284
TechniSat	01100, 01195
Technosat	01206
Techwood	01251, 01284, 01626
TELE System	01251, 01409, 01611
Telefonica	02527, 02761
Telestar	01100, 01195, 01251, 01334, 01626
Televes	01300, 01334
Televisa	00887
Tevion	01409
Thomson	00847, 00853, 01175, 01046, 01291, 01662
Tonna	01611
Topfield	01206
Toshiba	01284
Trevi	01251
Triax	00853, 01251, 01291, 01413, 01611, 01626, 01631
Tricolor TV	01176
True Visions	02408
Twinner	01611

Satellite Set Top Box	
UBC	00642
UEC	00879, 01356
United	01251, 01626, 02418
Unitymedia	01882
Universum	00173, 01251
Variosat	00173
VEA	02418
Vestel	01251, 01284
Viasat	01195
Vision	01626
Visiosat	01413, 01457
Vitecom	01413
Vivax	02418
Volcasat	02418
Wavelength	01413
Wharfedale	01284
Wisi	00173
Worldsat	01251
Woxter	02418
Xsat	00847, 01323
Xtreme	01300
Yakumo	01413
Yes	00887
Zehnder	01251, 01334, 01413, 01631
Zinwell	02280, 02761

Satellite Set Top Box	
@sat	01300

SAT/PVR Combination	
@sat	01300
Amstrad	01175, 01662, 01693
Atsat	01300
Bell ExpressVu	00775
British Sky Broadcasting	01175, 01662

SAT/PVR Combination	
BskyB	01175, 01662
Bush	01645
Canal Satellite	02657
Canal+	02657
CanalSat	02657
Cyfrowy Polsat	02527
Digifusion	01645
DigiQuest	01300
DirecTV	01377, 00099, 20739
Dish Network	00775
Dishpro	00775
Dream Multimedia	01237
Echostar	00775, 02527
Edision	01631
Expressvu	00775
Foxtel	01356
Humax	01176, 01427, 01675, 01808
ID Sat	01334
iNETBOX	01237
Kaon	01300
Kathrein	01561
Maximum	01334
Mediacom	01206
MegaSat	01631
Movistar	02527
Multichoice	02059, 02060
MySky	01356, 01693, 01850
NEOTION	01334
Pace	01175, 01356, 01423, 01662, 01693, 01850, 02059, 02060, 02211, 02657
Panasonic	01304, 03099
Philips	00099
Samsung	01175, 01206, 01662
Sat Control	01300

SAT/PVR Combination	
Schneider	01206
Sedea Electronique	01206
SKY	01175, 01662, 01693, 01850, 02754
SKY Deutschland	02754
SKY Italia	01693, 01850
SKY New Zealand	02211
SKY PerfecTV!	02299, 03099
Sky+	01662
Skyplus	01175, 01334
Smart	01631
Sony	02299
Stream System	01300
Strong	01300
Sunny	01300
TechniSat	01195
Technosat	01206
Telefonica	02527
Telestar	01195
Thomson	01175, 01662
Topfield	01206
Viasat	01195
Xtreme	01300

Television	
A.R. Systems	10556, 10037
Accent	10037
Acer	11339
Acoustic Solutions	11037, 11667
Action	10650
Addison	10653
AEG	11037, 11324
Agfaphoto	12719
Aiko	10037
Aim	10037, 10499

Television	
Akai	10178, 10556, 10037, 10714, 10715, 10208, 11675
Akiba	10037
Akito	10037
Akura	10171, 10037, 10714, 10668, 11037, 11363, 11585, 11667, 11709
Alba	10037, 10714, 10668, 11037, 11585
Alien	11037
Allstar	10037
Amstrad	10171, 10037, 11037
Anam	10037
Anam National	10037, 10650
Andersson	11585
Anitech	10037
Ansonic	10037, 10668
AOC	10178, 10625, 11365
Ardem	10037, 10714
Arena	10037
Aristona	10556, 10037
ART	11037
Art Mito	11585
Asberg	10037
Astra	10037
ATD	10698
Atlantic	10037
Audiosonic	10037, 10714, 10715
Audiovox	11564
Audioworld	10698
Aventura	10171
Axxon	10714
Baird	10208
Bang & Olufsen	10565
Barco	10556

Television	
Basic Line	10556, 10037, 10668, 11037
Baur	10037, 10195, 10512
Beaumark	10178
Beijing	10208
Beko	10037, 10714, 10715, 11652
Belson	10698
Belstar	11037
Beon	10037
Berthen	10556, 10668
Bestar	10037
Bexa	12493
Black Diamond	11037
Blaupunkt	10195
Blue Sky	10556, 10037, 10625, 10714, 10668, 11037, 10715, 10499, 11324, 11363, 11652, 11709
Boca	11652
Boman	11324
Bork	11363
BPL	10037, 10208
Brandt	10625, 10714, 10560
Brimax	11709
Brinkmann	10037, 10668
Brionvega	10037
Bush	10556, 10037, 10714, 10668, 11037, 10698, 10208, 11585, 11652, 11667, 12719
Byd:sign	12140, 12209
Camper	10037
Carad	10668, 11037
Carena	10037
Carrefour	10037
Cascade	10037

Television	
Casio	10037
Cathay	10037
CCE	10037
Centrum	11037
Centurion	10037
Changhong	10508
Chimei	11666
Clarivox	10037
Classic	10499
Clatronic	10037, 10714, 11324
Clayton	11037
Condor	10037
Conrowa	10698
Contec	10037
Cosmel	10037
CPTEC	10625, 11363
Crown	10037, 10714, 10668, 11037, 10715, 10208, 11652
Cyberpix	11667
D-Vision	10556, 10037
Daewoo	10178, 10556, 10037, 10634, 10499, 12098
Dansai	10037, 10208
Dantax	10714, 11037, 10715, 11652
Datsura	10208
Dawa	10037
Daytron	10037
De Graaf	10208
DEC	11709
Decca	10037
Denver	10037, 11709
Desmet	10037
Diamant	10037
Diamond	10698

Television	
Dick Smith Electronics	10698
Digatron	10037
Digihome	11667
Digiline	10037, 10668
Digitek	11709
Digitor	10037, 10698
Dixi	10037
DL	11363
DMTech	12001
Domeos	10668
Drean	10037
DSE	10698
Dual	10037, 11037, 11585, 11667
Durabrand	10178, 10171, 10714, 11037, 11652
Dux	10037
DX Antenna	11817, 13817
Dynatron	10037
Dynex	12049
e-motion	11709
E:max	11324
Easy Living	11666, 11709
ECE	10037
Elbe	10556, 10037
Electrograph	11755
Element	11886
Elfunk	11037
ELG	10037
Elin	10037
Elite	10037
Emerson	10178, 10171, 10037, 10714, 10668, 11394, 11864, 11886
Envision	11365, 11506
Epson	11379

Television	
Erres	10037
ESA	10171
ESC	10037
Euroman	10037
Europa	10037
Europhon	10037
Evesham	11248, 11667
Excello	11037
Exquisit	10037
Ferguson	10037, 10625, 10560, 10195, 11037, 11585
Fidelity	10171, 10037, 10512
Finlandia	10208
Finlux	10556, 10037, 10714, 10715, 11248, 11667
Firstline	10556, 10037, 10714, 10668, 11037, 10208, 11363
Fisher	10208
Flint	10037
Formenti	10037
Fraba	10037
Friac	10037, 10499
Fujicom	11709
Fujitsu	10809
Fujitsu Siemens	10809, 11248, 11666
Funai	10171, 10714, 10668, 11037, 11394, 11666, 11817, 13817
G-Hanz	11363
Gaba	11037
Galaxi	10037
Galaxis	10037
Gateway	11755
GE	10178, 11454, 10625, 10560
GEC	10037

Television	
Genesis	10037
Genexxa	10037
GFM	10171, 11864, 11886
Godrej	11585
Goldfunk	10668
GoldStar	10178, 10037, 10714, 10715
Goodmans	10556, 10037, 10625, 10714, 10560, 10668, 10634, 11037, 10499, 11585, 11667
Gorenje	11585
Gradiente	10037
Graetz	10714
Granada	10037, 10560, 10208
Grandin	10556, 10037, 10714, 10668, 11037, 10715, 11652
Grundig	10556, 10037, 10195, 11223, 11667, 12625
GVA	11363, 12098
H & B	12001
Haier	10037, 10698, 10508
Hallmark	10178
Hankook	10178
Hanseatic	10556, 10037, 10625, 10714, 10634, 10499, 12001
Hantarex	10037
Hantor	10037
Harwood	10037
Hauppauge	10037
HB	11324
HCM	10037
Highline	10037
Hinari	10037, 10208
Hisawa	10714

Television	
Hisense	10556, 10508, 10208, 11363, 12098
Hitachi	10150, 10178, 10037, 10634, 11037, 10508, 10499, 10578, 11576, 11585, 11643, 11667, 11691, 12433
Hitachi Fujian	10150
Hitec	10698
Hoeher	10714
Hornyphon	10037
Hugoson	11666
Humax	11295
Hypson	10556, 10037, 10714, 10668, 11037, 10715
Hyundai	11037, 10698
Iberia	10037
ICE	10037
iLo	11394
Imperial	10037
Indiana	10037
Ingelen	10714
Inno Hit	11037, 11585
Innova	10037
Insignia	10171, 11423, 11564, 12049
Integra	11807, 13100, 13500
Interbuy	10037
Interfunk	10037, 10512
Internal	10556
Intervision	10037
Irradio	10037
IRT	10698
Isukai	10037
ITS	10037
ITT	10208
ITT Nokia	10208

Television	
ITV	10037
JGC	11709
Jinfeng	10208
Jinxing	10556, 10037, 10698
JMB	10556, 10634, 10499
Jubilee	10556
JVC	10650, 10653, 10508, 11428, 11601, 12271
Kaisui	10037
Karcher	10714, 11324
Kathrein	10556
Kendo	10037, 11037, 11585
Kennex	11037
Kioto	10556
Kiton	10037, 10668
KLL	10037
Kneissel	10556, 10037, 10499
Koenig	10037
Kolin	10150, 10037, 11610, 11755
Kolster	10037
Konka	10037, 10714
Korpel	10037
Kosmos	10037
Kunlun	10208
L&S Electronic	10714
Lavic	11363
Lavis	11037
Lecson	10037
Lenco	10037, 11037
Leyco	10037
LG	10178, 10556, 10037, 10714, 10715, 10698, 11423, 11768, 11840, 12182, 12358, 12424, 12834
Liesenkoetter	10037

Television	
Lifetec	10037, 10714, 10668, 11037, 12001
Linsar	11585
Local India TV	10208
Local Malaysia TV	10698
Lodos	11037
Loewe	10037, 10512, 11884
Logik	11037, 10698
Logix	10668
Luma	11037
Lumatron	10037, 10668
Lumenio	10037
Lux May	10037
Luxor	11037, 10208
LXI	10178
M Electronic	10037, 10714, 10634, 10195, 10512, 11652
Madison	10037
Magnavox	10171, 11454, 11365, 11506, 11755, 11867, 12372
Magnum	10037, 10714, 10715
Manesth	10037
Manhattan	10037, 10668, 11037
Marantz	11454, 10556, 10037
Mark	10037, 10714, 10715
Master's	10499
Mastro	10698
Masuda	10037
Matsui	10556, 10037, 10714, 10195, 11037, 10208, 11666, 11667
Matsushita	10650
Maxent	11755
Maxess	12493
Meck	10698
Mediator	10556, 10037

Television	
Medion	10556, 10037, 10714, 10668, 11037, 10698, 10512, 11248, 11585, 11667, 12001, 12719
Megatron	10178
MEI	11037
Memorex	10150, 10178, 11037
Mercury	10037
Mermaid	10037
Metronic	10625
Metz	10037, 10668, 10195, 11037, 11533
MGA	10150, 10178
Micromaxx	10037, 10714, 10668, 11037, 11324, 12001
Microspot	11614
Mikomi	11037, 11585
Minato	10037
Minerva	10195, 11248
Ministry Of Sound	11667
Minoka	10037
Mirai	11666
Mitsubishi	10150, 11250, 10178, 10556, 10037, 11037, 10512, 11171
Mivar	10609
Moree	10037
Morgan's	10037
Moserbaer	11585
MTC	10512
MTlogic	10714
Mudan	10208
Multitec	10037, 10668, 11037
Multitech	10037
Myrica	11666
Myryad	10556
NAD	10178, 10037

Television	
Naiko	10037
Nakimura	10037
National	10508, 10208
NEC	10178, 10653, 10508, 10499
Neckermann	10556, 10037
NEI	10037, 11037
NEO	11324
Netsat	10037
NetTV	11755
Neufunk	10556, 10037, 10714
New Tech	10556, 10037
Newave	10178
Nikkai	10037
Nikkei	10714
Nikko	10178
Nokia	10208
Norcent	11365
Nordmende	10037, 10714, 10560, 10195, 11585, 11667, 12001
Normerel	10037
Nortek	10668
Novatronic	10037
Novita	11585
Nu-Tec	10698
O.K.Line	11037, 11324
Oceanic	10208
Odys	12719
Okano	10037
OKI	11585, 11667
Olevia	11610, 12124
Omni	10698
Onei	11667
Onida	10653
Onimax	10714

Television	
Onix	10698
Onkyo	11807, 13100, 13500
Onn	11667, 11709
Onyx	11709
Opera	10037, 10714
Optimus	10650
Orbit	10037
Orion	10556, 10037, 10714, 11037, 12001
Orline	10037
Ormond	10668, 11037
Osaki	10556, 10037
Osio	10037
Osume	10037
Otto Versand	10556, 10037, 10195, 10512
Pacific	10556, 10714, 11037, 11324
Palladium	10556, 10037, 10714
Palsonic	10037, 10698
Panama	10037
Panasonic	11480, 10037, 10650, 10508, 10208, 11636, 12170
Panavision	10037
Panda	10698, 10508, 10208
Pansonic	11636
Penney	10178
Perdio	10037
Perfekt	10037
Petters	10037
Philco	10178, 10171, 10037, 11394
Philips	10178, 10171, 11454, 10556, 10037, 10512, 10605, 10690, 11394, 11506, 11867, 12372
Phocus	10714, 11652

Television	
Phoenix	10037
Phonola	10556, 10037
Pioneer	10037, 10698, 10512, 11457, 11636, 12171
Plantron	10037
Playsonic	10037, 10714, 10715, 11652
Powerpoint	10037, 10698
Prinston	11037, 10715
Profitronic	10037
Proline	10037, 10625, 10634, 11037
Prosonic	10037, 10714, 10668, 11324, 11585, 11667, 11709, 12001
Protech	10037, 10668, 11037
Proton	10178
ProVision	10556, 10037, 10714, 11324
Pvision	12001
Pye	10556, 10037
Qingdao	10208
Quasar	10650
Quelle	10037, 10668, 10195, 11037, 10512
R-Line	10037
Radiola	10556, 10037
Radiomarelli	10037
RadioShack	10178, 10037
Radiotone	10037, 10668, 11037
RCA	10178, 11454, 10625, 10560, 10618, 11781, 12247, 12403, 12429, 12434, 12746, 12932
Realistic	10178
Recor	10037
Rectiligne	10037
Redstar	10037

Television	
Reflex	10037, 10668, 11037
Relisys	11585
Remotec	10171, 10037
Reoc	10714
Revox	10037
RFT	10037
Roadstar	10037, 10714, 10668, 11037, 10715
Rolson	12001, 12098
Rowa	10037, 10698
Saba	10625, 10714, 10560
Sagem	10618
Saivod	10037, 10668, 11037
Salora	10208, 12001
Sampo	10178, 10171, 10650, 11755
Samsung	10178, 10556, 10037, 10618, 10650, 10208, 12051
Sansui	10171, 10037, 10714, 11248, 12001
Sanyo	11037, 10508, 10208, 11142, 11365, 11585, 11667, 11974
SBR	10556, 10037
Schaub Lorenz	10714, 11324, 11363, 11667, 12001
Schneider	10556, 10037, 10714, 10668, 11037
Schoentech	11037
Scotch	10178
Scott	10178
Sears	10178, 10171
Seaway	10634
Seelver	11037
SEG	10037, 10668, 11037, 12719
SEI	10037

Television	
Sei-Sinudyne	10037
Serie Dorada	10178
Shanghai	10208
Sharp	10650, 10818, 11165, 11423, 11659
Shintoshi	10037
Shivaki	10178, 10037
Siam	10037
Siemens	10037, 10195
Siera	10556, 10037
Silva	10037
Silva Schneider	10037
Silver	10715
SilverCrest	11037
Sinudyne	10037
SKY	10037, 11614, 11775
Skyworth	10037, 10698
Sliding	11324
SLX	10668
Solavox	10037
Soniko	10037
Soniq	12493
Sonitron	10208
Sonneclair	10037
Sonoko	10037
Sonolor	10208
Sontec	10037
Sony	10810, 11505, 11167, 11651, 11825
Soundesign	10178
Soundwave	10037, 11037, 10715
Sowa	10178
Squareview	10171
Standard	10037, 11037, 11709
Starlite	10037
Strato	10037

Television	
SunBriteTV	11610
Sungoo	11248
Sunny	10037
Sunstar	10037
Sunstech	12001
Sunwood	10037
Supersonic	10208
SuperTech	10556, 10037
Supra	10178
Svasa	10208
Swisstec	11614, 11775
Sylvania	10171, 11394, 11864, 11886
Symphonic	10171, 11394
Synco	10178, 11755
Syntax	11610
Sysline	10037
Tacico	10178
Talent	10178
Tashiko	10650
Tatung	10037, 11248, 11324
TCL	10698, 12403, 12429, 12434, 13183
TCM	10714, 12001
Teac	10178, 10171, 10037, 10714, 10668, 11037, 10698, 10512, 11248, 11363, 11709, 11755
Tec	10037
Tech Line	10037, 10668
Technica	11037
Technics	10556, 10650
Technika	11667
TechniSat	10556
Technisson	10714, 11652
Techno	11585

Television	
Technosonic	10556, 10625, 10499, 11324
Techvision	11709
Techwood	11037, 11667
Tecnimagen	10556
Teco	10178, 10653
Tedelex	10208, 11709
Teknika	10150
TELE System	11585
Telecor	10037
Telefunken	10037, 10625, 10714, 10560, 10698, 11585, 11667
Telefusion	10037
Telegazi	10037
Telemeister	10037
Telesonic	10037
Telestar	10556, 10037
Teletech	10037, 10668, 11037
Teleview	10037
Tennessee	10037
Tensai	10037, 11037, 10715
Tesla	10556, 10037, 10714, 11037, 11652
Tevion	10556, 10037, 10714, 10668, 11037, 11248, 11585, 11667
Thomson	10037, 10625, 10560
Thorn	10037, 10499, 10512
Thorn-Ferguson	10499
TMK	10178
Tokai	10037, 10668, 11037
Tokaido	11037
Topline	10668, 11037
Toshiba	10195, 11037, 10618, 10650, 10508, 11169, 11508, 11524, 11652, 12203

Television	
Toyoda	11709
TRANS-continents	10556, 10037, 10668, 11037
Transonic	10037, 10698, 10512, 11363
Triad	10556
Trio	11248
Triumph	10556, 10037
TVTEXT 95	10556
Uher	10037
Ultravox	10037
UMC	11614, 11775
Unic Line	10037
Uniden	12122
United	10556, 10037, 10714, 11037, 10715, 11652
Unitek	11709
Universal	10037, 10714
Universum	10037, 10668, 10195, 11037, 10618, 10512
Univox	10037
V7 Videoseven	11666, 11755
Vestel	10037, 10668, 11037, 11585, 11667
Vexa	10037
Victor	10650, 10653, 11428
Videocon	10037, 10508
VideoSystem	10037
Vidtech	10178
Viewsonic	11365, 11564, 11755, 12049
Vision	10037
Vistron	11363
Vivax	11709
Vizio	11758, 12209
Vortec	10037
Voxson	10178, 10037

Television	
VU	11365, 12098
Walker	11667
Waltham	10037, 10668, 11037
Wansa	12098
Wards	10178
Watson	10037, 10714, 10668, 11037
Wega	10037
Welltech	10714, 11652
Weltstar	11037
Westinghouse	11755
Wharfedale	10556, 10037, 11324, 11667
White Westinghouse	10037
Wilson	10556
Windsor	10668, 11037
Windy Sam	10556
Wintel	10714
World-of-Vision	12001
Wyse	11365
Xenius	10634
Xiahua	10698
XLogic	10698
Xrypton	10037
Yamaha	10650, 11576
Yamishi	10037
Yokan	10037
Yoko	10037
YU-MA-TU	10037
Zenith	10178, 10037, 11365, 11423, 12358
Zepto	11585
Zonda	10698

VCR	
DirecTV	20739
Go Video	20614

VCR	
Humax	20739
Panasonic	20614, 20616
Philips	20739
ReplayTV	20614, 20616
Sonic Blue	20614, 20616
Sony	20636
TiVo	20636, 20739

PVR	
DirecTV	20739
Go Video	20614
Humax	20739
Panasonic	20614, 20616
Philips	20739
ReplayTV	20614, 20616
Sonic Blue	20614, 20616
Sony	20636
TiVo	20636, 20739

TV/VCR Combination	
Amstrad	10171
Ferguson	10625
Fidelity	10171
GoldStar	10037
Grundig	10556, 10037, 10195
LG	10178
Mitsubishi	10556
Philips	10556, 10037
Radiola	10556
Saba	10625
Sanyo	11974
Schneider	10556, 10037
Sharp	10818
Siemens	10037
Sony	11505
Teac	10178, 10171

TV/VCR Combination	
Technics	10556
Thomson	10625

DVD	
3D LAB	30539
Accurian	30675
Acoustic Solutions	30713
AEG	30675
AFK	31152
Aiwa	30533
Akai	30675
Alba	30539, 30713
Ambiance	33052
Amstrad	30713
Anthem	32820
Aristona	30539, 30646
ASDA	32213
Audix	30713
Autovox	30713
Awa	32587
Basic Line	30713
Bel Canto Design	31571
Black Diamond	30713
Blue Parade	30571
Blue Sky	30713
Brandt	30503
Bush	30713
C-Tech	31152
California Audio Labs	30490
Cambridge Audio	32808
Centrum	30675, 30713
Changhong	30627
Cinetec	30713
Clatronic	30675
Clayton	30713
Crown	30713

DVD	
Dantax	30539, 30713
Denon	30490, 30634, 31634, 32258, 32748
Dick Smith Electronics	31152
Digihome	30713
DigiLogic	30713
Digix Media	31394
Disney	30675
DSE	30675, 31152
Dual	30713
Durabrand	30675, 30713
Dynex	32596
Dyon	33052
eBench	31152
Elfunk	30713
Elite	31152
Emerson	30675, 32213
EuroLine	30675
Ferguson	30713
Finlux	30741
Firstline	30713
Foehn & Hirsch	33052
Funai	30675
GE	30522
GFM	30675
Global Sphere	31152
Go Video	30741
GoldStar	30741
Goodmans	30713, 31152
GPX	30741
Grandin	30713
Grundig	30539, 30713
H & B	30713
Haaz	31152
Hanseatic	30741

DVD	
Harman/Kardon	30582, 31229, 33228
Henss	30713
Hitachi	30573, 30713, 31664
Hoeher	30713
HotMedia	31152
Humax	30646
Inno Hit	30713
Insignia	30741, 30675, 32428, 32596
Integra	30503, 30571, 30627, 31612, 31634, 32147
Irradio	30646
JVC	30503, 30539, 30623, 30867, 31597, 31602, 32855
Kendo	30713
Kennex	30713
Kenwood	30490, 30534
Lenco	30713, 33052
Lexicon	32545
LG	30741, 31602
Limit	33052
Lodos	30713
Loewe	30539, 30741, 32474, 32783
Logik	30713
Lumatron	30741, 30713
Lunatron	30741
Luxman	30573
Luxor	30713
Magnavox	30503, 30539, 30646, 30675, 30713, 31354
Manhattan	30713
Marantz	30539, 32414, 32432, 33444
Mark	30713
Matsui	30713

DVD	
Maxim	30713
MDS	30713
Medion	30630, 30741
Memorex	32213
Metz	30571, 30713
Micromedia	30503, 30539
Micromega	30539
Microsoft	30522, 32083
Minax	30713
Mitsubishi	30713
Momitsu	33052
NAD	30741
NEC	30741, 31602
Onkyo	30503, 30627, 31612, 32147, 30571, 31634
Oppo	30575, 32545
Orion	30713
Ormond	30713
Pacific	30713
Palladium	30713
Panasonic	30503, 30490, 31579, 31641, 32523, 32710, 32859
Pelican Accessories	30533
Philco	30675
Philips	30503, 30539, 30646, 30675, 30713, 31340, 31354, 32056, 32084, 32434, 32689
Pioneer	30571, 30142, 30631, 31571, 32442, 32860
Polk Audio	30539
Presidian	30675
ProAudio	31394
Proscan	30522
Proson	30713
Pye	30539, 30646

DVD	
Radionette	30741
Radiotone	30713
RCA	30522, 30571, 32213, 32587
REC	30490
Red	32213
Redstar	31394
Roadstar	30713
Rotel	30623
Salora	30741
Samsung	30490, 30573, 30199, 30820, 31635, 32069, 32329, 32489, 33195
Sanyo	30713
Schneider	30539, 30646, 30713
Schoentech	30713
Scott	31394
SEG	30713
Semp	30503
Sharp	30630, 30675, 30713, 32250, 32474, 32652, 32869
Sherwood	30741, 33052
Shinsonic	30533
Silva Schneider	30741
SilverCrest	31152
Skantic	30539, 30713
SM Electronic	31152
Smart	30713
Sony	30533, 30864, 31033, 31070, 31431, 31516, 31633, 32180
Soundwave	30713
Star Clusters	31152
Strato	31152
Strong	30713
Supervision	31152

DVD	
Sylvania	30630, 30675
Symphonic	30675
Tamashi	31394
Tandberg	30713
Targa	30741
Tchibo	30741
TCL	32587
TCM	30741
Teac	30571, 30741, 30675, 31394
Technica	30713
Technics	30490
Techwood	30713
Teletech	30713
Theta Digital	30571
Thomson	30522
Toshiba	30503, 31639, 32277, 32551, 32705, 33157
Transonic	31394
TVE	30713
United	30675, 30713, 31152
Universum	30741, 30713
Urban Concepts	30503
Vestel	30713
Victor	31597
Vizio	32563
Vtrek	32587
Waltham	30713
Wellington	30713
Weltstar	30713
Wharfedale	30713
Windsor	30713
Windy Sam	30573
Xbox	30522, 32083
XLogic	31152

DVD	
Yamaha	30490, 30539, 30646, 30817, 31354, 32298, 32299
Zenith	30503, 30741

Blu-ray Disc	
Ambiance	33052
Anthem	32820
Cambridge Audio	32808
Denon	32258, 32748
Dyon	33052
Foehn & Hirsch	33052
Funai	30675
Harman/Kardon	33228
Insignia	30675, 32428, 32596
Integra	32147, 32900, 32910, 33100, 33101, 33500, 33501
JVC	32855
Lenco	33052
Lexicon	32545
LG	30741, 31602
Limit	33052
Loewe	32474, 32783
Magnavox	30675
Marantz	32414, 32432, 33444
Momitsu	33052
Onkyo	32147, 32900, 32910, 33100, 33101, 33500, 33501
Oppo	32545
Panasonic	31641, 32523, 32859
Philips	32084, 32434, 32689
Pioneer	30142, 32442
Samsung	30199, 33195
Sharp	32250, 32474, 32652
Sherwood	33052

Blu-ray Disc	
Sony	31516, 32180
Sylvania	30675
Toshiba	32551, 32705, 33157
Vizio	32563
Yamaha	32298, 32299

DVD-R	
Accurian	30675
Aristona	30646
Denon	30490
Emerson	30675
Funai	30675
Go Video	30741
GPX	30741
Hitachi	31664
Humax	30646
Irradio	30646
JVC	31597
LG	30741
Loewe	30741
Magnavox	30646, 30675
Medion	30741
Panasonic	30490, 31579, 32523, 32710, 32859
Philips	30646, 31340
Pioneer	30631, 32860
Pye	30646
RCA	30522
Samsung	30490, 31635
Schneider	30646
Sharp	30630, 30675, 32869
Sony	31033, 31070, 31431, 31516, 31633, 32180
Sylvania	30675
Targa	30741
Toshiba	31639, 32277, 32551

DVD-R	
Victor	31597
Yamaha	30646
Zenith	30741

HD-DVD	
Integra	32901, 33104 33504
LG	30741
Microsoft	32083
Onkyo	32901, 33104 33504
Xbox	32083

TV/DVD Combination	
Akai	11675
Black Diamond	11037, 30713
Blue Sky	11037, 30713
Bush	11037, 10698, 12719, 30713
Centrum	11037, 30713
Crown	11037, 30713
DMTech	12001
Dual	11037, 30713
Dynex	12049
Elfunk	11037, 30713
Emerson	11394, 11864, 11886, 30675
Ferguson	11037, 30713
Goodmans	11037, 30713
Grandin	30713
Grundig	30539
H & B	12001
Hanseatic	12001
Hitachi	11037, 11667, 30713
Insignia	12049
JVC	12271
LG	11423
Logik	11037, 30713
Luxor	11037, 30713

TV/DVD Combination	
Magnavox	12372
Matsui	11037, 30713
Medion	12719
Nordmende	12001
Odys	12719
Panasonic	12170
Philips	11454, 10556, 11394, 30539
Powerpoint	10698
Prosonic	12001
Pvision	12001
RCA	12746, 12932
Schaub Lorenz	12001
SEG	11037, 12719, 30713
Sharp	10818
Soniq	12493
Sunstech	12001
Sylvania	10171, 11394, 11864, 11886, 30630, 30675
Teac	10698
Technica	11037, 30713
Telefunken	10698
Teletech	11037, 30713
Thomson	10625
Toshiba	11524
United	11037, 30713
Universum	30713
Vestel	11037
Viewsonic	12049
Weltstar	11037, 30713

Memo

Y1112-1

SN 29401094

(C) Copyright 2012 ONKYO SOUND & VISION CORPORATION Japan. All rights reserved.

29401094