HTC D60

EN

MANUAL
HTC D60

Translation of manual from original language

HTC D60

Contact information

HTC Sweden AB Box 69
SE-614 22 Söderköping, Sweden Tel: +46 (0) 121-294 00
Fax: +46 (0) 121-152 12

You can find addresses for our retailers and service partners on our website:
www.htc-floorsystems.com
Always specify the model and serial number when asking questions about your machine.

Trademarks

HTC is a trademark owned by HTC Sweden AB. Other names and products mentioned in this manual may be registered trademarks owned by the relevant companies.

© 2017 HTC Sweden AB. All rights reserved.

EC Declaration of conformity

Manufacturer: HTC Sweden AB
Box 69
SE-614 22 Söderköping, Sweden
+46 (0)121-29400

Type of equipment: Dust extractor

Make: HTC

Model: HTC D60

Year of manufacture: See machine name plate

Serial number: See machine name plate

Original of the EC declaration of conformity (Swedish).
Other languages are translations of the original of the EC declaration of conformity.

Söderköping 21.11.2017

Peter Lundgren
Development Manager
HTC Sweden AB

Björn Jeansson
Production Manager
HTC Sweden AB

1. Standards

As the manufacturer, we hereby declare under our sole responsibility that the above product with serial numbers from 2017 onward conforms to the applicable regulations in:

Standard	Description
60335-1	Houshold and similar electrical appliances - Safety - Part 1: General requirements
60335-2-69	Household and similar electrical appliances - Safety - Part 2-69: Particular requirements for wet and dry vacuum cleaners, including power brush, for commercial use
UL73	UL STANDARD FOR SAFETY MOTOR-OPERATED APPLIANCES
CAN/CSA E60335-2-69-01 R2010,	Safety of Household and Similar Electrical Appliances - Part 2: Particular Requirements for Wet and Dry Vacuum Cleaners, Including Power Brush, for Industrial and Commercial Use (Adopted CEI/IEC 60335-2-69:1997, second edition, 1997-02, including Amendment 1:2000, with Canadian deviations)
DIRECTIVE 2014/30/EU	Electromagnetic Compatibility (EMC) Directive
DIRECTIVE 2014/35/EU	The Low Voltage Directive (LVD)
ISO 3746:2010	Acoustics -- Determination of sound power levels and sound energy levels of noise sources using sound pressure
ISO 11203:2010	Acoustics -- Noise emitted by machinery and equipment

This product was CE marked in 2017.
The technical documentation is available from the manufacturer.

Table of contents

1.	**Standards**	**5**
2.	**Introduction**	**7**
2.1	General information	7
2.2	Liability	7
2.3	Manual	7
2.4	Machine name plate	8
3.	**Machine description**	**9**
3.1	General information	9
3.2	Machine overview	10
4.	**Transport & storage**	**11**
4.1	Handling and storage	11
4.2	Transport & lifting	11
5.	**Operation**	**12**
5.1	Safety	12
5.2	General information	12
5.3	Various positions of the pre-separator & dust extractor	12
5.4	Control panel	13
5.5	Display use menu	14
5.6	Dust filtration	15
5.7	Filter cleaning	17
5.8	Replacing the dust bag	18
5.9	Display information menu	19
6.	**Accessories**	**20**
6.1	Automatic filter cleaning	20
6.2	Remote control	21
7.	**Maintenance**	**22**
7.1	General information	22
7.2	Cleaning the dust extractor	22
7.3	Daily maintenance	22
7.4	Weekly maintenance	23
7.5	Filter replacement	24
7.6	Control cabinet	25
8.	**Service**	**26**
8.1	Repairs	26
8.2	Spare parts	26
8.3	Motor protection	26
8.4	Function checks	27
9.	**Troubleshooting**	**28**
9.1	Warnings and error messages	29
10.	**Technical data**	**31**
11.	**Environment**	**33**

2. Introduction

2.1 General information

Together with HTC's floor grinders, HTC's dust extractor is designed to create as dust-free environment as possible in conjunction with the dry grinding of stone and concrete floors. The dust sucked up is collected in, for example, a bag system.

Read the manual carefully so that you know how to use and maintain the dust extractor before using it. Contact your local retailer for further information. For contact information, see Contact Information at the start of the manual.

2.2 Liability

Even though every effort has been made to make this manual as complete and accurate as possible, we bear no responsibility for incorrect or missing information. HTC reserves the right to change descriptions in this manual without giving prior notice.

This manual is protected by the Copyright Act and no part of it may be copied or used in any other way without the written approval of HTC.

2.3 Manual

In addition to general functions, this manual contains information on areas of use and care of the dust extractor.

Safety Instructions – Explanation of Symbols
The following symbols are used in the document to indicate where special attention is needed.

Warning!

This symbol means Warning! and indicates a risk of personal injury or material damage in the event of incorrect use of the dust extractor. If you see this symbol next to a section of text, you must be particularly careful when reading through the text and not carry out any stages of which you are unsure. This is for your own and other users' safety and to avoid damage to the dust extractor.

Note!

This symbol means Note! and indicates a potential risk of material damage in the event of incorrect use of the dust extractor. If you see this symbol next to a section of text, you must be particularly careful when reading through the text and must not carry out any stages of which you are unsure. This is to avoid damage to the dust extractor.

Tip!

This symbol means Tip! You can get tips and advice on ways to make operating your dust extractor easier, and ways to avoid wear. When you see this symbol you should read the accompanying text to facilitate your work and prolong the service life of the dust extractor.

2.4 Machine name plate

The machine name plate provides the following information. The model and serial number must be specified when ordering spare parts for the machine.

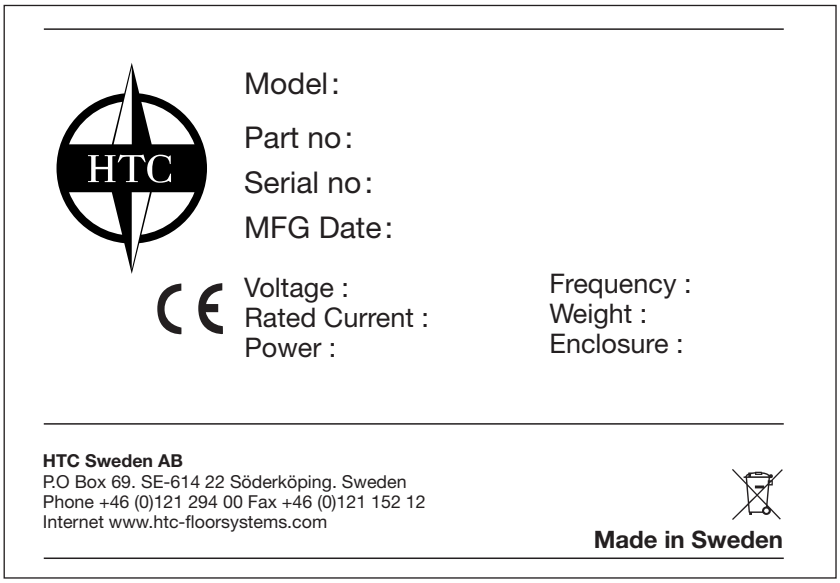

Name	Description
Model	Model
Part no	Part no
Serial no	Serial no
MFG date	MFG date
CE	Approved standards. Only one example is shown here, the machine name plate shows the correct approved standards. Also see standards page 5
Voltage	Voltage (VAC)
Rated current	Rated current (A)
Power	Power (kW/hp)
Frequency	Frequency (Hz)
Weight	Weight (kg/lbs)
Enclosure	Enclosure
	Recycling. See Recycling page 33

3. Machine description

3.1 General information

The machine is a dust extractor with an integrated pre-separator for industrial and building use intended for the dry vacuuming of dust particles, e.g. concrete, wood, stone etc. The dust extractor is equipped with a pre-separator, where the majority of the dust is collected instead of being sucked into the actual vacuum cleaner, as well as a two-stage filter system, a coarse filter followed by a fine filter.

It is also equipped with a filter cleaning system that unloads the vacuum cleaner's filter increasing the service life and maintaining the performance of the dust extractor.
To handle the collected dust, a bag system is used on the pre-separator and dust extractor. To prevent bags from being sucked into the pre-separator or dust extractor, they are equipped with a rubber valve that closes during operation.
The pre-separator can be raised and lowered with a simple movement and easily removed from the chassis if necessary.

The dust extractor can also be controlled from HTC DURATIQ grinder.

3.2 Machine overview

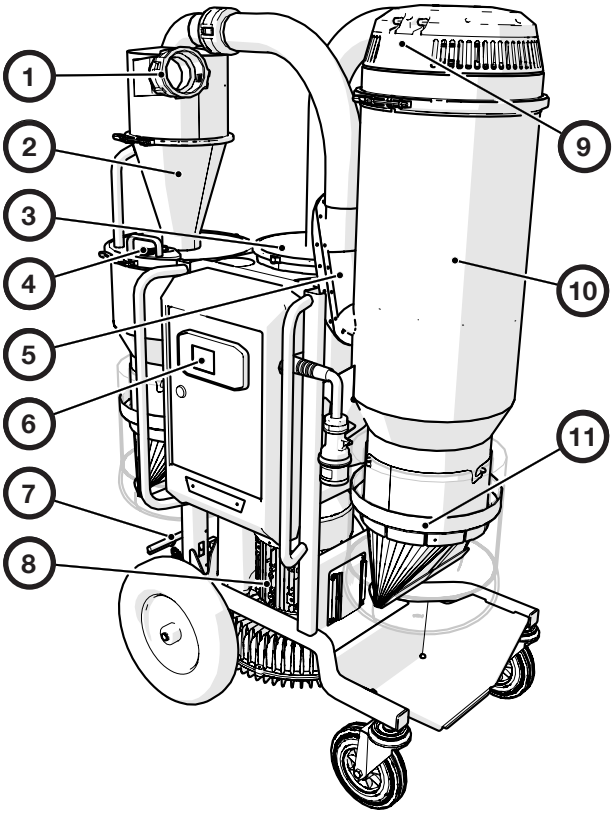

Pos.	Description
1	3” camlock inlet connection
2	Pre-separator
3	Fine filter
4	Bypass valve
5	Inlet valve
6	Control cabinet with control panel
7	Parking brake
8	Side duct fan
9	Filter cleaning valve
10	Coarse filter container
11	Bag connection with lip valve

4. Transport & storage

4.1 Handling and storage

The dust extractor should be stored in a heated, dry area when not in use.
Otherwise it may be damaged by condensation and cold.
The dust extractor's dimensions and weight are given in chapter Technical data.

4.2 Transport & lifting

Warning!

If handled carelessly, the dust extractor can overturn and cause both personal injury and damage to the equipment.

Always ensure that the dust extractor is emptied of dust and other particles before it is transported, lifted or hoisted. When being moved with a forklift, always place the forks under the protection bar. Always make sure that the dust extractor is securely anchored to its surroundings and that the parking brake is in the locked position during transport to prevent it from moving during transport. Ensure that the securing straps, or other equipment used for anchoring during transport, are tightened in lashing points and tensioned downwards as illustrated.
When lifting the machine, use 4 approved lifting straps at the lifting points on the machine.
When the dust extractor is to be hoisted, it must be securely anchored at two lashing points.

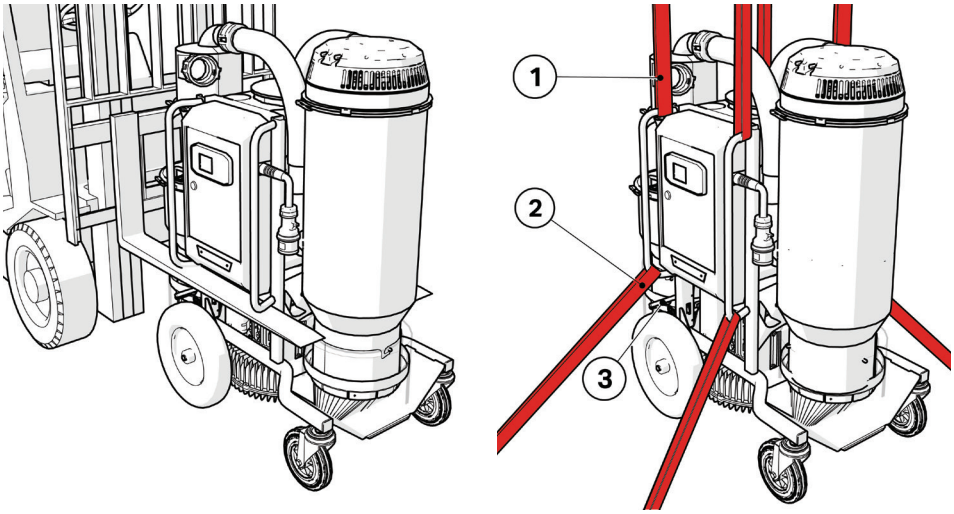

Pos.	Description
1	Lifting points
2	Lashing points
3	Parking brake

5. Operation

5.1 Safety

This chapter contains all the warnings and notes that must be considered for the dust extractor.

5.2 General information

Warning!

Use protective equipment such as safety shoes, safety goggles, protective gloves, mouth mask and hearing protection.

5.3 Various positions of the pre-separator & dust extractor

Warning!

The dust extractor may only be used or repaired by personnel who have received the requisite theoretical and practical training and who have read the user manual.

Warning!

The dust extractor may only be used and moved on level surfaces. There is a risk for crush injuries, if it should start to roll.

Tip!

Check the minimum recommended cable area before using an extension cord. You will find the recommended cable area under Technical Data.

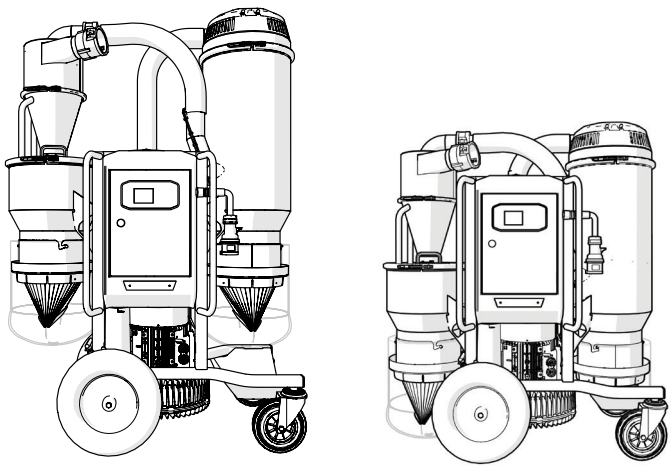

The pre-separator and the dust extractor can be lowered during transport but can also be removed with a simple movement.

5.4 Control panel

NO.	Icon	Function	Description
1	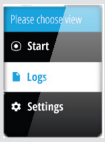	Display	Indicates flow (m³ or cfm). Indicates pressure (total pressure mbar or in Aq). Filter status, 0% clean filter, 100% blocked filter.
2		On/Standby	Starts up or places the machine in standby mode. The machine wakes up when power is supplied. To place the machine into standby mode, hold the button in. To wake the machine press once.
3		Remote connection	Indicates status for DURATIQ remote connection.
4		Accessory off/on	Switches the accessory off and on
5		Dust emptying (accessory, automatic)	Keeps the filter cleaning valve open for a time so that the dust can fall down in the dust bags.
6		Filter cleaning (accessory, automatic)	Runs filter cleaning (closes inlet valve and opens filter cleaning valve) once.
7		Alarm / Warning	Alarm, red LED. The machine cannot be operated due to an error Warning, yellow LED. The machine has restricted functionality.
8		Menu navigation	Controls menu selection etc. When you are not in the menus these buttons control other functions. Arrow up/down - switches between which value on the screen is to be dominating (large).
9		Start / stop	Starts and stops the side duct fan. Automatic phase switching (direction of rotation) of the side duct fan, In the event of incorrect direction of rotation, the side duct fan stops, the phases switch and the side duct fan starts in the correct direction.

5.5 Display use menu

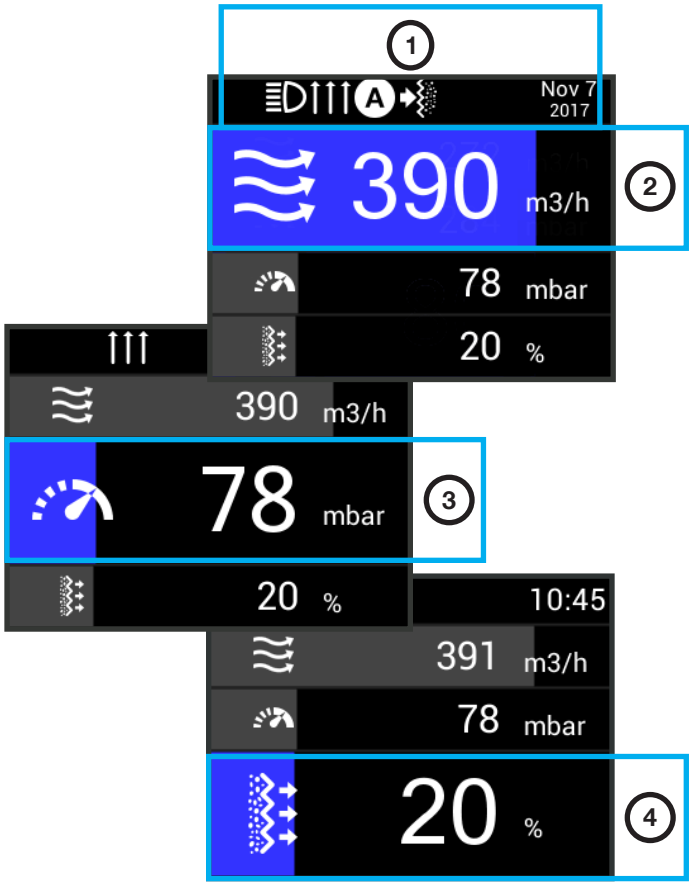

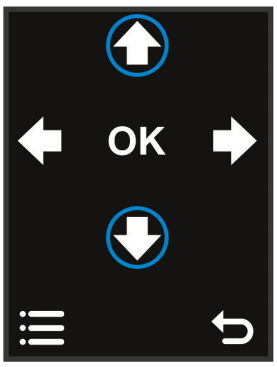

Use the up or down arrows to change display mode.

NO.	Icon	Function	Description
1		Service	Service
		Dust emptying	Dust emptying
		Filter cleaning	Filter cleaning
		Direction of rotation	Direction of rotation
	A	Automatic	Automatic
		Lighting	Lighting
		Time and date	Time and date
2		Flow	Indicates flow in (m³ or cfm) turns yellow when the flow is low.
3		Pressure	Indicates pressure (total pressure mbar or mm/Aq) turns yellow when the negative pressure is too great, suction blocked. Risk of the motor shutting off due to overheating.
4		Filter status	0% = Clean filter. 100% = Blocked filter, yellow bar, time to clean filter

5.6 Dust filtration

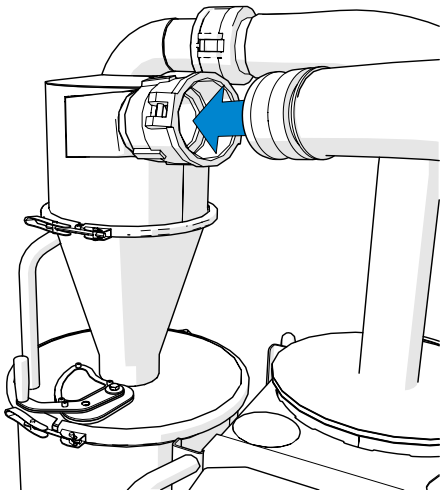

Hose connection
The suction system is equipped with a 3" connector for quick, easy and safe connection of the suction hose between the grinding machine and dust extractor or other accessories that are to be used for dust collection.

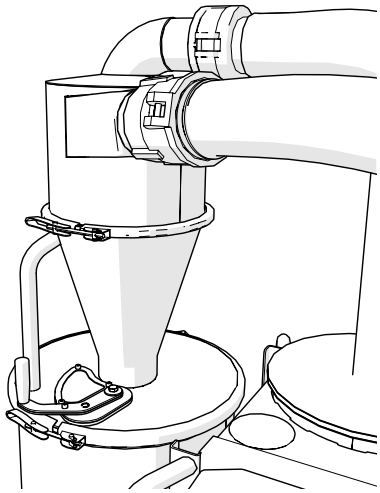

Pre-separator
The task of the pre-separator is to separate the majority of the dust from the airflow that passes the machine.
The separated dust is collected in the space under the actual pre-separator.

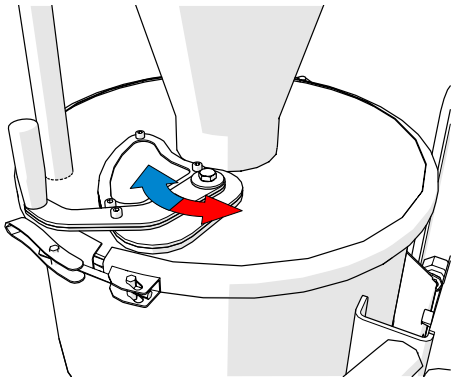

Bypass valve
To empty the space down in the bag, close the bypass valve by turning counter clockwise.

Note!

The valve should not be closed for more than a short interval, because the risk of dust building up and blocking the pre-separator increases significantly.

When the valve is closed, the dust falls into the space down into the bag and if the bag is full, it can now be replaced. When the valve is closed, the dust is not separated but instead continues directly to the coarse filter container. To start separating the dust, turn the valve back.

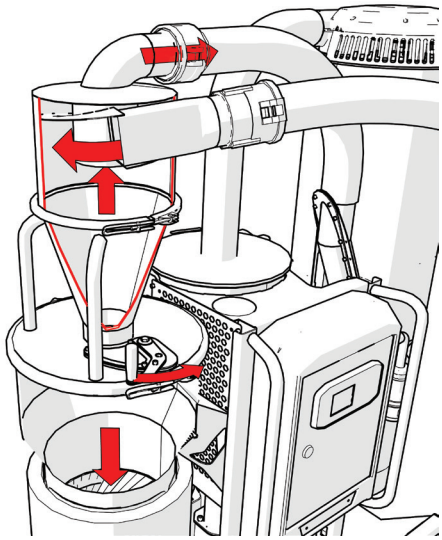

When the air enters the vacuum tank, the speed reduces, so the remaining dust in the airflow falls down into the bag. The airflow then passes a coarse filter in the coarse filter container.

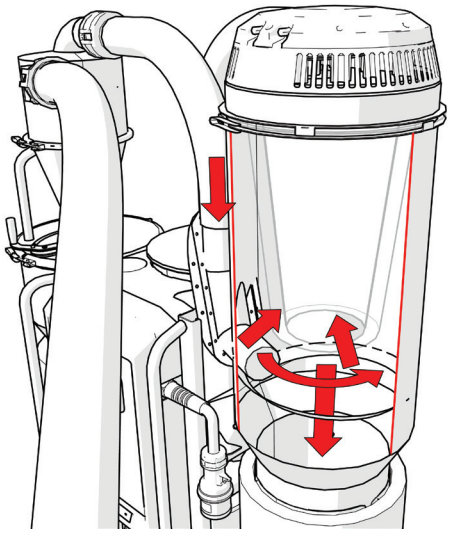

Air cleaning
To achieve a high degree of cleanliness, the air also passes a fine filter before it passes the side duct fan and flows out through the exhaust.

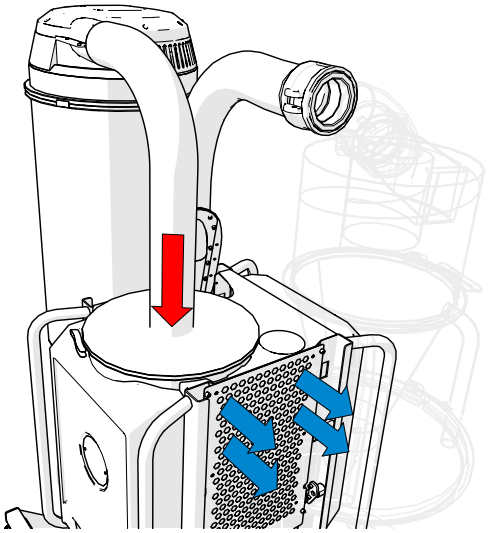

5.7 Filter cleaning

NO.	Icon	Name	Description
1		Button 1	Closes the inlet valve to build up a negative pressure in the coarse filter container
2		Button 2	Opens the cleaning valve to clean the coarse filter

To clean the coarse filter, hold button 1 in so that the inlet valve closes and the airflow into the coarse filter container ceases. The side duct fan then starts to build up a greater negative pressure.

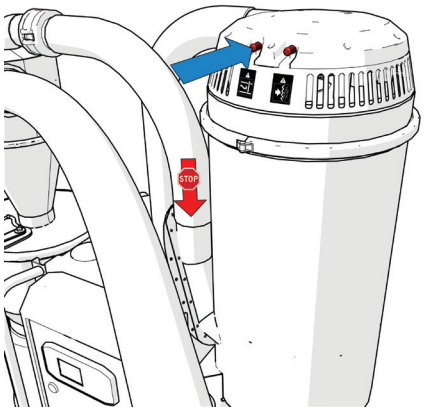

Keep button 1 held in and then press button 2 to open the cleaning valve and clean the coarse filter.

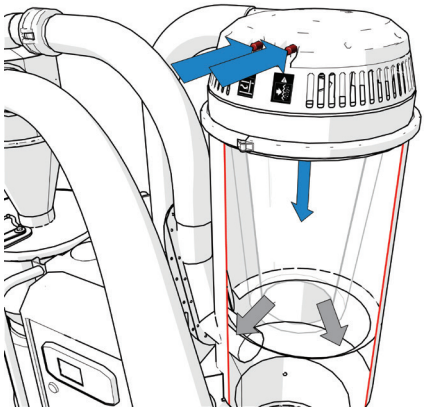

On the display, check that the desired filter status is achieved after cleaning. Otherwise, clean again.
If the filter status is above 30%, dust is stuck in the filter and the filter must be cleaned or replaced. See Filter replacement 6.8

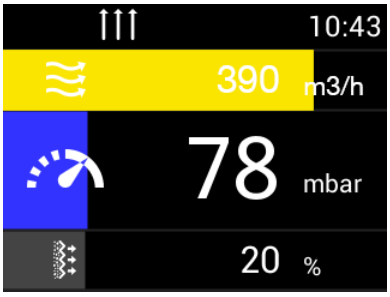

5.8 Replacing the dust bag

The dust extractor is equipped with a bag system that makes it possible to minimise dust exposure when changing dust bags. This bag system can be ordered. Please contact your HTC retailer.

Warning!

Use protective equipment such as safety shoes, safety goggles, protective gloves, mouth mask and hearing protection.

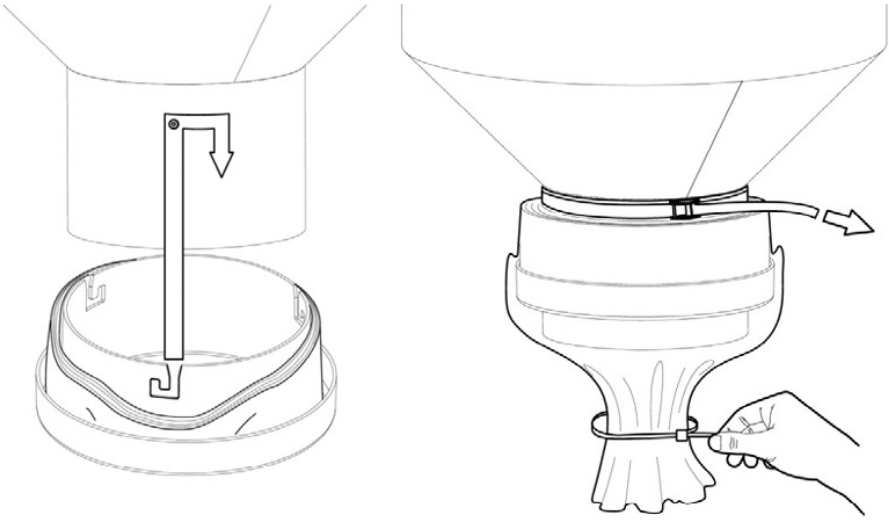

Place the bags in the holder and install on the container. Pull up the inner part of the bag and tighten with the strap. Seal the lower part with a tie.

When the bag is full, pull out the bag and install two ties and cut off the bag.

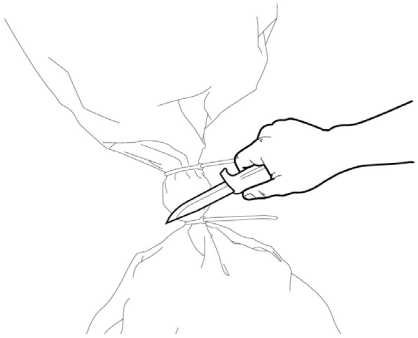

Tip!

Pull out a new length of empty bag down to the collection plate. This is to create the best conditions for the waste to fall into the bag.

5.9 Display information menu

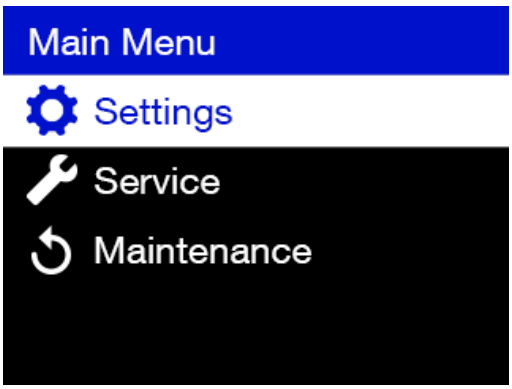

MENUS						
	SETTINGS		TIME/DATE	Time and date settings		
			UNITS	**Metric**		m³/h & mbar
				Imperial		CFM & in Aq
			FREQUENCY	**50Hz**		For calculating flow
				60Hz		
			FILTER PURGE	A	Auto Purge	AUTO **ON**/OFF
					Purge Time	T I M E R 3/5/10/**15**/20/30 MIN
					Filter Status	50% — **100%**
					Flow	150m³/h — 500m³/h
						100cfm — 300cfm
			RADIO SYSTEM	Group id		
	SERVICE		HTC SUPPORT	Link to webpage (QR code and web address)		
			INFORMATION	SERIAL NO.		
				FIRMWARE VERSION		
				MACHINE HOURS		
				COMMISIONING DATE		
				NEXT SERVICE		

6. Accessories

6.1 Automatic filter cleaning

Automatic filter cleaning automatically cleans the dust extractor's coarse filter when it becomes blocked. This occurs by electromagnets connecting to buttons 1 and 2, whereupon the dust extractor's control panel can perform filter cleaning automatically or via a button push. Filter cleaning occurs when one or more of the following conditions are met:

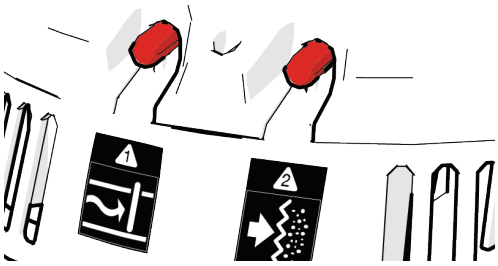

- Set time between filter cleans reached.
- Filter status - Standard is 100%.
  Lower values giver more frequent pulses.
- Flow limit - Standard is 240 m³/h (150cfm).
  Higher values give more frequent pulses.

To adjust pre-set values, see 4.9 Display information menu.

Filter cleaning from the control panel		
Function button		Description
	Bag emptying	Performs a slower filter clean so that the dust has time to fall down into the bag
	Filter cleaning	Performs a filter cleaning cycle

6.2 Remote control

DURATIQ Remote Connection connects the dust extractor to a DURATIQ grinding machine.
To pair a dust extractor and DURATIQ grinding machine go to Radio System in the menu and select the same ID in the grinding machine and dust extractor.
By doing this, the dust extractor can be controlled from a DURATIQ grinding machine and can also send data between the devices.

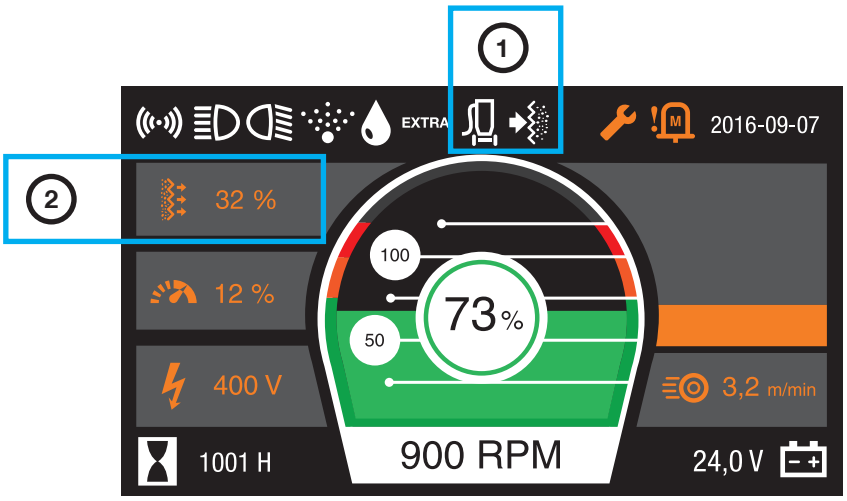

Information and control from DURATIQ grinding machine			
Pos.	**Icon**	**Name**	**Description**
1		Vacuum cleaners	Gray icon: Machine and vacuum cleaner are connected to each other.
			White icon: Vacuum cleaner is running.
		Warning	Yellow flashing icon in the event of warning.
		Error Message	Red flashing icon in the event of error message.
2		Vacuum cleaner values Change display using arrow-right or arrow-left on the control panel.	Flow
			Negative pressure
			Filter status
Function button			**Description**
		Dust extractor	Starts and stops the dust extractor
		Filter cleaning	Quick press performs one filter clean
			Button held in performs one dust empty

7. Maintenance

7.1 General information

We recommend regular inspection of the dust extractor.

Warning!

During maintenance and repair work, the machine must be disconnected from the mains power supply.

Warning!

Use protective equipment such as safety shoes, safety goggles, protective gloves, mouth mask and hearing protection.

Warning!

Do not rinse off the dust extractor, as moisture can penetrate to the electrical parts and damage the side duct fan.

7.2 Cleaning the dust extractor

- Vacuum the dust extractor.
- Perform filter cleaning and empty the machine of dust.
- Then clean the dust extractor after use with a damp sponge or cloth.
- Only use water.

7.3 Daily maintenance

- Check that the dust bags are intact.
- Check that the lip valves are not damaged.
- Check the filter status.
- Check that accessories such as hoses, that connect to the dust extractor are intact and do not have any cracks.
- In addition, make sure that the air flow is unobstructed and that there are no blockages.

7.4 Weekly maintenance

Check for leaks
- Place your hand over the inlet and make sure it goes up to 370mbar.

Check pre-separator
- Inspect sealing strips and surfaces for cracks or damage.
- Check for unusual dust build up.
- Also check for cracks or other irregularities.
- Adjust the quick fasteners on the pre-separator if necessary.

Check bypass valve
- Check the butterfly damper can move without jamming.
- Visually check that there is no damage on the butterfly damper's seal surfaces.

Check filter cleaning valve
- Perform a normal cleaning cycle and check that the pulse valve is working distinctly and does not leak in the closed position.

Check side duct fan
- If necessary, vacuum up any dust on visible parts of the side duct fan. Dust around the fan can cause overheating.
- Also listen for noise from the side duct fan.

7.5 Filter replacement

Warning!

The dust that is sucked up may be harmful if inhaled. Follow local regulations and use breathing protection.

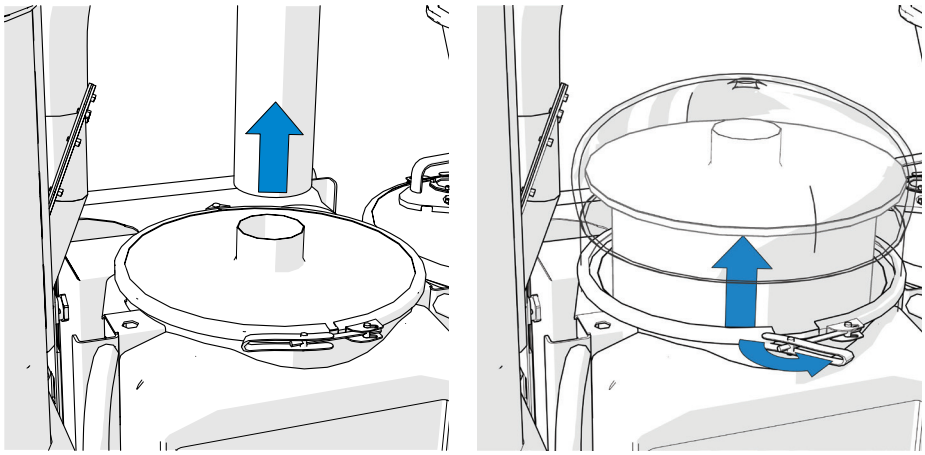

To check the filter, start by disconnecting the hose to the fine filter and checking in the hose connection for dust on the inside of the fine filter. In the event of dust, remove the lock ring, pull a bag over to reduce contact with dust particles and replace the filter.

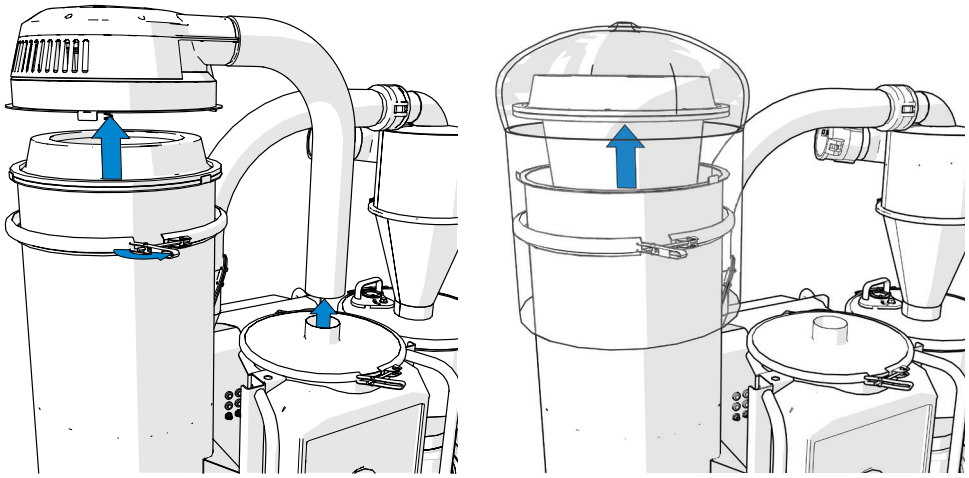

If there is dust in the fine filter, it has passed the coarse filter, which must then be replaced. Also use a bag here to protect against dust particles.

7.6 Control cabinet

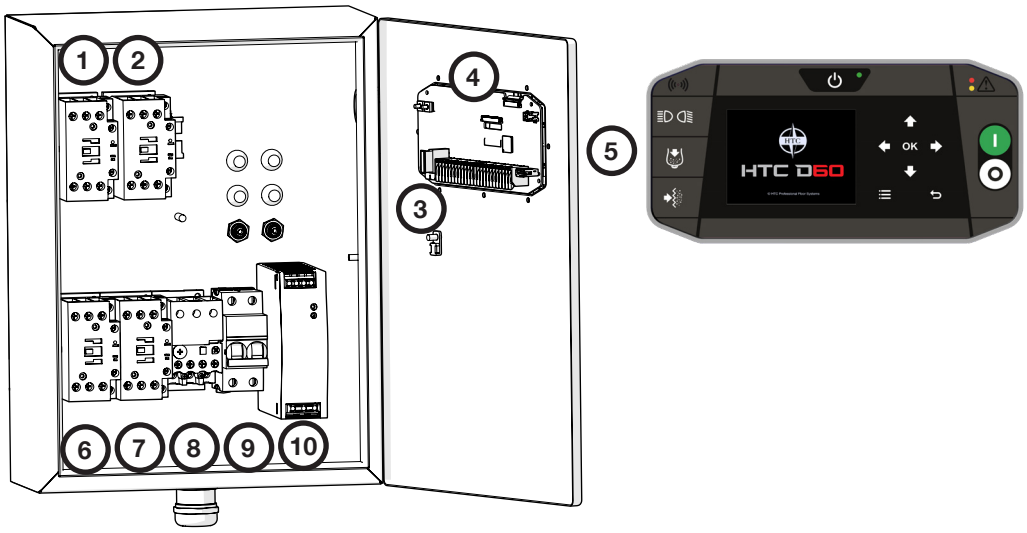

No.	Designation	Description
1	K1	Contact (Clockwise)
2	K2	Contact (Counter clockwise)
3	Fuse	4A 24V DC
4	USB	USB Port
5	PLC	Control panel

No.	Designation	Description
6	K3	Contact (Black, Y)
7	K4	Contact (Operation, D)
8	Q1	Motor protection
9	F1	Miniature circuit breaker
10	U1	Power supply

8. Service

8.1 Repairs

Any repairs that may be required must be carried out by a HTC Service Centre that has trained service personnel and uses HTC original parts and accessories. Contact your retailer if your machine requires servicing. For contact information, see Contact Information at the start of the manual.

8.2 Spare parts

To ensure rapid delivery of spare parts, always specify the model, the machine's serial number and the spare part number when ordering. Information on the model and serial number can be found on the machine's name plate.
Information on spare part numbers can be found in the machine's spare parts list which is available to read or print out from the accompanying digital media or HTC's website: www.htc-floorsystems.com.

Only original tools and spare parts from HTC may be used. Otherwise, neither the CE marking nor the warranty will be valid.

8.3 Motor protection

Automatic reset of motor protection
See warning message on the screen, when it disappears, the motor protection has been reset.

- The motor protection trips when the motor draws too much current or if the motor protection gets hot.
- Check whether the suction system is blocked (negative pressure is displayed on the screen).
- Disconnect the machine from the mains power supply.
- Clean the motor/control cabinet (wait a while before opening the control cabinet).
- Close the control cabinet, connect the machine to the mains power supply and start the machine.

8.4 Function checks

	Check point	Action	
1	The dust bags	Check that the bags are intact	
2	The lip valves	Check that they are not damaged	
3	Pre-separator	Plug the inlet and check on the display that a negative pressure is reached. Perform the checks with the bypass valve in the open position and in the closed position	
		Open the cover and check for wear on the bypass valve and wear rubber.	
4	Inlet valve	Ensure that the dust extractor is off. Remove the hose from in the inlet valve and visually inspect the inside of the rubber membrane for wear and holes.	
		Start the dust extractor and hold in button 1 on the filter cleaning valve and after 3 seconds check that a negative pressure of at least 33mbar is reached.	
		Switch off the suction system and remove the hose for the fine filter. Check for dust on the inside of the 3” hose. If dust is present, then there is damage to the coarse filter or pilot hoses (Ø 10mm) which can cause damage to the inlet valve's membrane.	
5	Cleaning valve	Perform a normal cleaning cycle and check that the valve is working distinctly and does not leak. During normal cleaning, the display shows a max. value of approx. 280 - 330mbar.	
6	Side duct fan	Listen for noise.	
		Clean the side duct fan. Dust around and on the fan can cause overheating.	
7	Wheels	Check for wear. Check the bearings and suspension.	
8	Hose connections	Check for leaks.	
9	Brakes	Function checks	
10	Lifting points	Check for cracks	
11	Function of the guides	Check all position locations and check for any wear to suspension lugs.	
12	DURATIQ remote connection	Check functions	Automatic filter cleaning
			Lighting

9. Troubleshooting

This chapter describes some of the errors that may occur and how to deal with them. If the error cannot be corrected, or if errors arise other than those described here, contact your nearest retailer. See Contact Information at the front of the manual.

Symptoms	Cause/Action
The dust extractor will not start.	Check electrical connections.
	Check miniature circuit breaker.
	Check power supply (does the LED light?).
	Check circuit board fuse. LED lights red when the fuse has blown.
The connected accessory does not work.	Is the symbol on the screen lit?
	Check the voltage at the accessory.
Inlet valve constantly open/closed.	Check the flow on the outputs.
	Check that it works manually. See chapter 4, Dust filtration.
	Check that the membrane in the valve is intact.
Filter cleaning valve not working.	Check the flow on the outputs.
	Is it sealed? Check using a vacuum pump.
	Is the membrane intact?
The pump will not start.	Motor protection tripped. Error message appears on screen.
	Error message appears on screen.
	Open-circuit motor cable.

9.1 Warnings and error messages

Warnings

Warnings appear on a yellow background at the top of the screen. A warning does not usually stop operation but the machine may have restricted functionality. Actions to ensure operation may need to be taken. A warning can normally be minimized using the OK key and the warning is then minimized to an icon in the icon field. When the problem has been solved, the warning disappears.

<table>
<tr><th>Error Message</th><th colspan="3">Description</th></tr>
<tr><td>5V POWER PROBLEM</td><td colspan="3">Circuit board internal voltage error.</td></tr>
<tr><td>Duratiq Rmt no resp</td><td colspan="3">DURATIQ Remote Connection internal error.</td></tr>
<tr><td>PTC Short Circuit</td><td colspan="3">Short-circuit in PTC circuit</td></tr>
<tr><td>USB/PTC Overcurrent</td><td colspan="3">Overload on USB or PTC. Short-circuit?</td></tr>
<tr><td rowspan="10">PSens Err 000</td><td colspan="3">Pressure sensor error.
Causes automatic pulsing to only work on time and not on filter status/ flow. Some display values also stop working, see below.
Each pressure sensor error has a three digit error code, each sensor has its own place in the three digit code that indicates which sensor is faulty.</td></tr>
<tr><td>1xx</td><td colspan="2">Sensor diff error
The values of the sensors do not correspond.
May be due to defective sensor or one of the following errors.</td></tr>
<tr><td>x#x</td><td colspan="2">Error in pressure sensor P_in (pressure sensor in coarse filter container)
Error in pressure sensor P_in means filter status does not work. Automatic pulsing only occurs on time.</td></tr>
<tr><td>xx#</td><td colspan="2">Error in pressure sensor P_tot (Pressure sensor after fine filter)
Error in pressure sensor P_tot means flow meter, negative pressure meter and filter status do not work. Automatic pulsing only occurs on time.</td></tr>
<tr><td colspan="3"><table>
<tr><th>Error code</th><th>Designation</th><th>Description</th></tr>
<tr><td>1</td><td>SENSOR SHORT TO GND</td><td>Internal error on circuit board/sensor</td></tr>
<tr><td>2</td><td>SENSOR SHORT TO REF</td><td>Internal error on circuit board/sensor</td></tr>
<tr><td>4</td><td>SENSOR LIMIT HIGH</td><td>The sensor gives a value that is greater than what is normal/possible. Pressure sensor error.</td></tr>
<tr><td>8</td><td>SENSOR LIMIT LOW</td><td>The sensor gives a value that is less than what is considered normal.
May be due to leakage in the dust bag, filter, seals,
pressure sensor hose etc. for example.
May also be due to a defective sensor.</td></tr>
</table></td></tr>
<tr><td colspan="3">Example:
Error code 4 on sensor P_in and error 1 on pressure sensor P_tot, the error message will be: PSens Err 041</td></tr>
</table>

Error Message
Error messages appear on a red background at the top of the screen. An error usually stops one or more functions of the machine. Action may need to be taken to resume operation.

Error Message	Description	Cause		
Motor Overload	The overcurrent protection has tripped. Resets automatically when the machine has cooled	May be due to suction system stoppage (high negative pressure).		
		Low voltage.		
		Excessive heat.		
		Defective motor.		
Terminal xx Overload	Short circuit on terminals 1-12.	xx indicates to which terminal the short circuit applies.		
Pump Direction Ctrl Failure	After three failed start-up attempts three alternatives are displayed. The machine struggles to read the phase sequence.	**Alternativ**		
		Is the pump direction correct?		Yes
				No
				Try Again

10. Technical data

The tables and pictures below show the technical data and dimensions for the dust extractor.

	HTC D60		
	160601	160602	160603
Motor power	5.5kW 7.5 hp		6.3kW 8.5 hp
Current	30 A	15 A	
Frequency	50Hz – 60Hz		60Hz
Voltage	180 – 240V 3~	380 – 415V 3~	440 – 480V 3~
Total machine weight	179 kg 395 lbs		
Max. theoretical airflow	50 Hz	530 m³/h 312 cfm	
	60 Hz	620 m³/h 365 cfm	620 m³/h 365 cfm
Machine's initial airflow	50 Hz	440 m³/h 260 cfm	
	60 Hz	500 m³/h 295 cfm	500m³/h 295 cfm
Max. vacuum machine	375 mbar 150 inH2O		
Filter area, main filter	4 m² 43 ft²		
HEPA filter class	H13		
Filter area, Hepa 13 filter	6 m² 64.6 ft²		
Recommended minimum cable area	6.0 mm² AWG10	2.5 mm² AWG14	
Storage temperature	-20 — +50 °C -4 — +122 °F		
Working temperature	-5 — +40 °C +23 — +104 °F		
Humidity	5-90%		
Sound pressure level, according to ISO 11203, measured using class 1 precision sound level meters.	82 dBA		
Sound power level, according to ISO 3746, measured using class 1 precision sound level meters.	89 dBA		
Transmitter frequency, remote start	2.45GHz band (2400 – 2483 Mhz)		
Transmitter power, remote start	>1.26mW (max1dBm)		

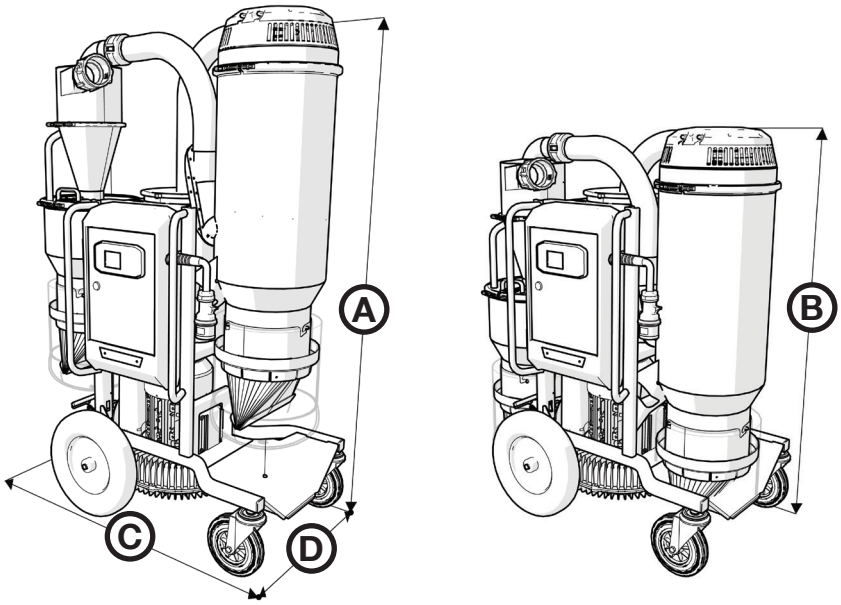

Height and length of the dust extractor, in the operating position and transportation position.

Dimensions	A	B	C	D
	1920 mm	1400 mm	1235 mm	680 mm
	75.6”	55.1”	46.6”	26.8”

11. Environment

HTC products are mainly constructed of recyclable metal and plastic.
The main materials used are listed below.

Chassis		
Machine part	**Material**	**Waste management**
Frame	Metal, powder-coated	Metal recycling
Front wheels	Metal, plastic and rubber	Metal recycling
Back wheels	Plastic and rubber	Combustible

Dust extractor		
Machine part	**Material**	**Waste management**
Cylinder	Metal, powder-coated	Metal recycling
Longopac holder	Plastic, ABS	Plastic recycling/Combustible
Cover	Metal, powder-coated	Metal recycling
Camlock	Metal incl. aluminium	Metal recycling 1)
Rotation joint pre-separator	Plastic (nylon)	Plastic recycling/Combustible
Hose	Plastic (PUR) and metal wire	Plastic recycling/Combustible
HEPA filter Hepa 13	Metal, glass fiber reinforced paper and hot-melt adhesive	Metal recycling 2)
Pre-filter	Metal, polyester and hot-melt adhesive	Metal recycling 2)

Electrical system		
Machine part	**Material**	**Waste management**
Cables	Copper conductors with Neoprene and PVC coating	Waste cable
Motor	Metal: Steel, aluminium and copper	Electronic waste
Electrical components	Metal and plastic	Electronic waste

1) If possible, different metals should be separated.
2) If the filter contains any hazardous substance from the grinding dust, it must be treated as hazardous waste.

   For recycling and scrapping of components, see the applicable national regulations for each country.

Head office

HTC Sweden AB
Box 69
SE-614 22 Söderköping
Sweden

Street (delivery) address:
Klevvägen 7
SE-614 92 Söderköping
Sweden

Tel.: +46 (0)121-29400
Fax: +46 (0)121-15212
E-mail: info@htc-sweden.com
www.htc-floorsystems.com

HTC Floor Systems GmbH
Hinter dem Entenpfuhl 17
65604 Elz
Deutschland

Tel.: +49 (0)6431 – 97658-0
Fax: +49 (0)6431 – 97658-22
E-Mail: order@htc-europe.de
www.htc-floorsystems.com

HTC Inc.
5617 Tazewell Pike
Knoxville, TN 37918
USA

Tel.: +1 865 689 2311
Fax: +1 865 689 3991
E-mail: info@htc-america.com
www.htc-floorsystems.com

HTC Floor Systems Ltd.
Unit 4 Kingston Business Park
Dunfermline Court
Maidstone Road
Kingston
Milton Keynes
MK10 0BY
United Kingdom

Tel.: +44 (0) 845 460 2500
Fax: +44 (0) 845 460 1500
E-mail: info@htc-europe.co.uk
www.htc-floorsystems.com

HTC France S.A.S.
ZI Mondeville Sud
10 Rue Nicéphore Niepce
14120 Mondeville
France

Tel.: +33 (0)2 31 34 27 00
Fax: +33 (0)2 31 34 09 29
E-mail: info@htc-europe.fr
www.htc-floorsystems.com