GERMAN by POOL

CLAGE

Instantaneous Electric Water Heater | DCN



ENVIRONMENT-FRIENDLY 環保 節水節能 energy and water saving

Online Warranty Registration

Please read these instructions and warranty information carefully before use and keep them handy for future reference.

USER MANUAL

Printed in Germany

WH-DCN-M-21(3)

請即進行保用登記!

有關保用條款細則，請看本說明書最後一頁。

Please register your warranty information now!

For Warranty Terms & Conditions,

please refer to the last page of this user manual.

Safety Instructions

Notice:

Please read these instructions carefully before installing or using the appliance!

Keep the instructions handy with the appliance for future use!

- Do not use the appliance until it has been correctly installed and unless it is in perfect working order.
- Do not remove the front cover under any circumstances before switching off the mains electrical supply to the unit.
- Never make technical modifications, either to the appliance itself or the electrical leads and water pipes.
- The appliance must be earthed at all times.
- Pay attention to the fact that water temperatures in excess of approx. 43°C are perceived as hot, especially by children, and may cause a feeling of burning. Please note that the fittings and taps may be very hot when the appliance has been in use for some time.
- The appliance is only suitable for domestic use and similar applications inside closed rooms, and must only be used to heat incoming water from the mains supply.
- The appliance must never be exposed to frost.
- The values stated on the rating plate must be observed.
- In case of malfunction, disconnect the fuses immediately. In case of leaks, cut off the mains water supply instantly. Repairs must only be carried out by the customer service department or an authorised professional.
- This appliance can be used by children aged from 3 years and above and persons with reduced physical, sensory or mental capabilities or lack of experience and knowledge if they have been given supervision or instruction concerning use of the appliance in a safe way and understand the hazards involved. Children shall not play with the appliance. Cleaning and user maintenance shall not be made by children without supervision.
- If the appliance is factory equipped with a power supply cable, it must be replaced with an original spare cable from the manufacturer in case of damaged by an authorized technician in order to avoid any hazards.
- In accordance with VDE 0700, a circuit breaker with a contact opening gap of at least 3 mm for each pole must be provided on the mains side of the connecting box for appliances with a fixed connection.
- The wall bracket must be secured with the supplied screws and dowels. The appliance must be secured to the wall bracket. The appliance may only be operated if it has been properly mounted on the wall bracket.

Safety Instructions

- The prescribed nominal pressure stated on the rating plate may not be exceeded at any time.
- The required water resistance may not fall below the value stated on the rating plate at any time.
- To observe additionally for pressureless installation:
  - The water outlet behind the devices must not be blocked, and the water flow must not be restricted.
  - The water outlet facilities, such as shower head, jet control and other outlet unit, must be decalcified regularly. Deposits must be removed in regular intervals.
  - Only the fittings recommended by the manufacturer may be used.
  - If the appliance is exclusively connected to a single shower, only the shower heads recommended by the manufacturer may be used. No other fittings or appliances which decrease the water flow to the shower may be installed.

安全注意事項

注意

在安裝或使用本設備之前，請仔細閱讀這些説明！

請妥善保存本説明書，以備將來使用！

- 除非已正確安裝本設備，且本設備處於正常工作狀態，否則請不要使用本設備。
- 在任何情況下，切勿在關閉設備的主電源之前取下面蓋。
- 切勿對本設備、電線或水管進行技術改造。
- 本設備必須永久接地。
- 當水溫超過43°C時，會被視為高溫，可能會令人體尤其是兒童引起灼痛。請注意，使用本設備一段時間後，配件和水龍頭可能會很熱。
- 本設備僅適合在家居或類似的密閉環境中使用，並且只能用於加熱來自主供水的進水。
- 切勿將本設備暴露在霜凍下。
- 必須遵守銘牌上規定的數值。
- 萬一發生故障，請立即斷開保險絲；萬一發生洩漏，請立即切斷主供水；並只能由客戶服務中心或授權的專業人員進行維修。
- 3歲以上的兒童以及肢體、感官或精神能力較弱或缺乏經驗和知識的人員可以使用本設備，前提是他們必須受到安全使用本設備的監督或指導並了解當中可能發生的危險。兒童不得玩耍本設備，且不得在沒有監督的情況下進行清潔和用戶維護本設備。
- 如果設備出廠時配備了電源線，在損壞的情況下，必須由被授權的技術人員用製造商提供的備用電纜替換，以免發生危險。
- 根據VDE 0700，對於具有固定連接的設備，必須在接線盒的電源側上提供一個斷路器，該斷路器每個極的接觸開口間隙至少為3 mm。
- 使用裝掛配件時，必須使用隨附的螺絲和銷釘進行固定。本設備必須固定在裝掛配件上，僅在將其正確地安裝在裝掛配件後才能進行操作。
- 任何時候都不得超過銘牌上標明的額定壓力。
- 所需的耐水性在任何時候都不得低於銘牌上標明的數值。
- 如選擇無壓力安裝，要注意以下情況：
  - 不得堵塞本設備後面的出水口，並且不得限制水流。
  - 必須定期對花灑頭、射流調節器和其他排水裝置等出水設備進行脱鈣處理，且必須定期清除沉積物。
  - 僅可使用製造商推薦的配件。
  - 如果本設備僅連接到一個花灑頭，則只能使用製造商推薦的花灑頭。不得安裝其他會減少淋浴水流的配件或設備。

Contents

Operation Instructions

Safety Instructions 3
1. Description of the Appliance 7
2. How To Use 8
Temperature Setting 8
Power Limit 8
Device Information 8
Venting After Maintenance Work 9
Cleaning and Maintenance 9
3. Troubleshooting and Service 10

Installation Instructions

1. Overview 11
2. Technical Specifications 12
3. Environment and Recycling 12
4. Dimensions 13
5. Installation 13
Installation Site 13
Mounting Accessories 14
Installing the Wall Bracket 15
Installing Connection Pieces 15
Installing the Appliance 16
6. Direct Connection 17
7. Electrical Connection 18
Wiring Diagram 18
Structural Prerequisites 18
Load Shedding Relay 18
Electrical Connection from Below 19
Electrical Connection from Above 19
8. Initial Operation 20
Selection of Power Rating 20
9. Maintenance Work 22
Cleaning and Replacing the Filter Strainer 22
Cleaning and Replacing the Filter Strainer if Direct Connected 23
Warranty Terms & Conditions 43

Operation Instructions

Note: Carefully read the enclosed safety instructions through in full before the appliance is installed, put into service and used and follow them in the further steps and during use!



The E-convenience instant water heater DCN/DCN13 is an electronically controlled pressure-resistant instantaneous water heater for an efficient water supply to one or more tap outlets.

Its electronic control regulates the power consumption depending on the selected outlet temperature, the respective inlet temperature and the flow rate, thus reaching the set temperature exactly to the degree and keeping it constant in case of water pressure fluctuations. The outlet temperature can be set to 35 °C, 38 °C, 42 °C, 48 °C or 55 °C using the central sensor key.

In case of a low feed temperature and a high flow rate at the same time, it could happen that the preset outlet temperature is not reached which is due to the fact that the appliance exceeded its capacity. The outlet temperature can be raised by reducing the water flow at the tap.

It is possible to use the instantaneous water heater in combination with an external load shedding relay for electronically controlled instantaneous water heaters (refer to installing instructions).

As soon as you open the hot water tap, the instantaneous water heater switches on automatically. When the tap is closed, the appliance automatically switches off. The water heater is operated at the device itself or with an optional wireless remote control.

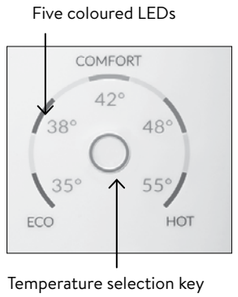

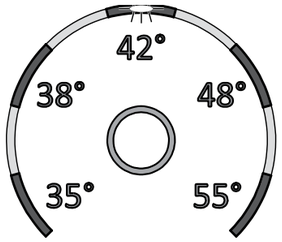

Temperature Setting

The temperature selection key ◯ allows you to quickly select one of five preset temperatures, that are typical for hot water applications: “Hand wash” 35 °C, “Shower” 38 °C, “Bath tub” 42 °C, “Kitchen” 48 °C and “Cleaning” 55 °C.

Every key press sets the temperature to the next level:

35 °C ◯ 38 °C ◯ 42 °C ◯ 48 °C ◯ 55 °C

Pressing the key ◯ once again, starts the cycle all over.

The currently selected temperature is indicated by one of five coloured LEDs.

Power Limit

If the full output of the instantaneous water heater DCN does not suffice to heat the tapped quantity of water, this will be indicated by flashing of the temperature LED (e.g. in winter time, when opening several taps at once). When you reduce the hot water flow rate, the LED lights up continuously again because the output of the appliance is again sufficient to reach the set temperature.

Device Information

Press and hold the temperature selection key for 10 seconds to open the info mode. After ten seconds, all LEDs light up once briefly and then switch off again immediately to confirm that the info mode is active. The device status is displayed via the LEDs:

LED bottom left: OFF = no water flow; FLASHING = water flow below switch-on point; ON = water flow above switch-on point.

LED top middle: ON = heating active; FLASHING = power limit. Otherwise OFF.

LED bottom right: OFF = device OK; FLASHING = error detected (inform customer service)

The display returns to normal operation after 60 seconds or after a key press.



Venting After Maintenance Work

This instantaneous water heater features an automatic air bubble protection to prevent it from inadvertently running dry. Nevertheless, the appliance must be vented before using it for the first time. Each time the appliance is emptied (e.g. after work on the plumbing system, if there is a risk of frost or following repair work), the appliance must be re-vented before it is used again.

1. Disconnect the instantaneous water heater from the mains (e.g. via deactivating the fuses).
2. Unscrew the jet regulator on the outlet fitting and open the cold water tap valve to rinse out the water pipe and avoid contaminating the appliance or the jet regulator.
3. Open and close the hot water tap until no more air emerges from the pipe and all air has been eliminated from the water heater.
4. Only then should you re-connect the power supply again (e.g. via activating the fuses) to the instantaneous water heater and screw the jet regulator back in.
5. The appliance activates the heater after approx. 10 seconds of continuous water flow.

Cleaning And Maintenance

- Plastic surfaces and fittings should only be wiped with a damp cloth. Do not use abrasive or chlorine-based cleaning agents or solvents.
- For a good water supply, the outlet fittings (e.g. jet regulators and shower heads) should be unscrewed and cleaned at regular intervals. Every three years, the electrical and plumbing components should be inspected by an authorised professional in order to ensure proper functioning and operational safety at all times.

3. Troubleshooting and Service



Repairs must only be carried out by authorised professionals.

If a fault in your appliance cannot be rectified with the aid of this table, please contact Germanpool Customer Service &Repair Centre. Please have the details of the typeplate at hand.

This instantaneous water heater was manufactured conscientiously and checked several times before delivery. Should malfunctions nevertheless occur, it is usually only due to a bagatelle. First attempt to switch the house fuses off and on again in order to reset the electronics. Next, try to remedy the problem with reference to the following table. In doing so, you will avoid unnecessary expense of customer service assistance.

DCN / DCN13		
Problem	**Cause**	**Solution**
Water stays cold, temperature LED does not light up	Master fuse tripped	Renew or activate fuse
	Safety pressure cut-out tripped	Contact Customer Service
Water stays cold, temperature LED does light up	Safety thermal cut-out tripped	Contact Customer Service
Water stays cold, all LEDs flash	Internal error	Contact Customer Service
Water heats up, all LEDs flash with exception of the temperature indication	Appliance detected an error	Contact Customer Service
Flow rate of hot water too weak	Outlet fitting dirty or calcified	Clean shower head, jet regulator or sieves
	Fine filter dirty or calcified	Let clean fine filter by customer service
Temperature indication LED flashes	Power limit reached	Decrease the warm water flow at the tap
Selected temperature is not reached	Cold water has been added via the tap	Tap hot water only; set temperature, check outlet temperature
Sensor key does not respond correctly or only sporadically	Display is wet	Dry display by wiping it with a soft cloth

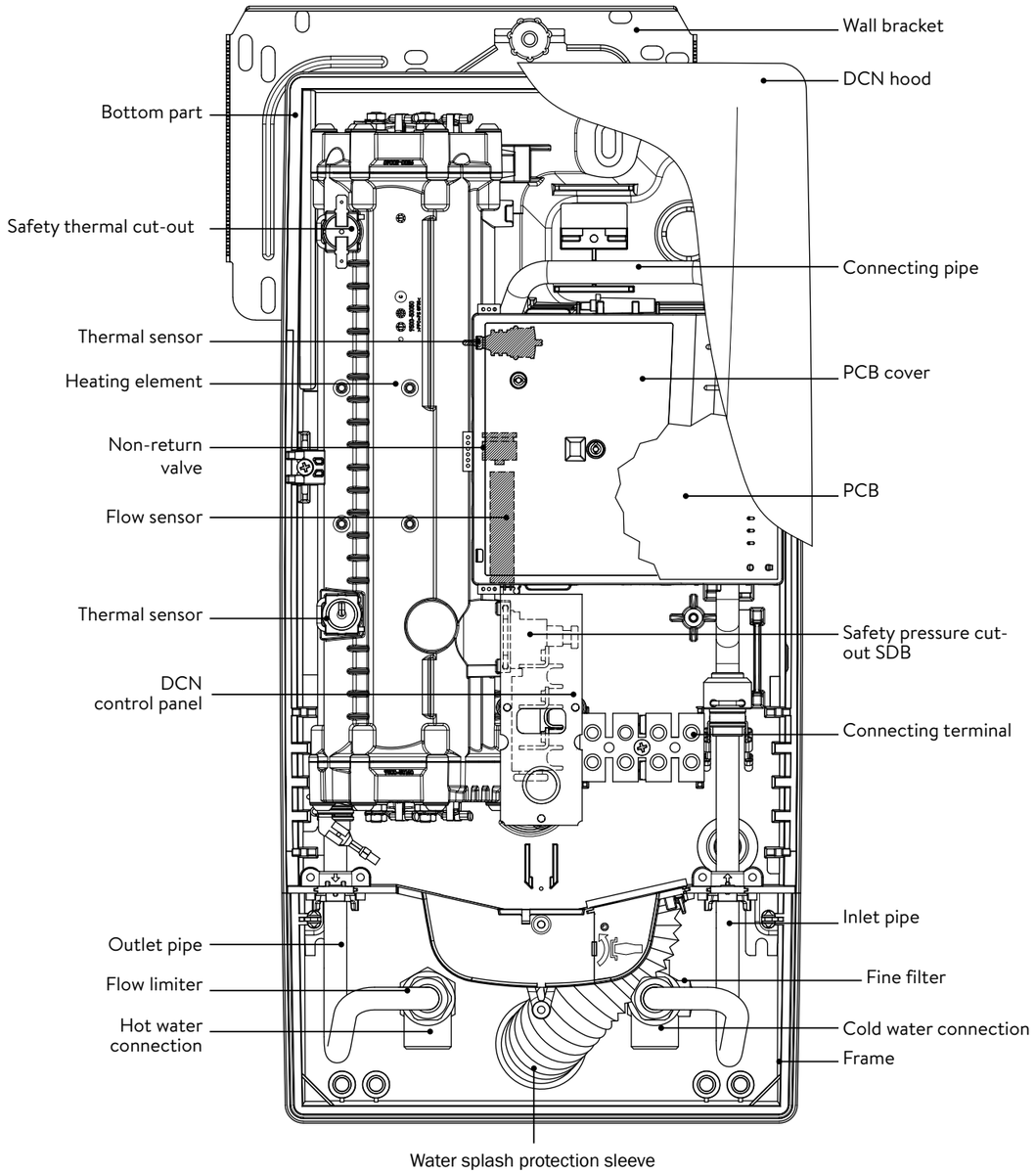



Screw-in nipples ½ inch

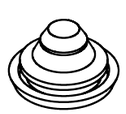

Grommet

2. Technical Specifications

Model	DCN13		DCN			
Energy efficiency class	A *)					
Rated capacity / rated current#	11 kW..13.5 kW (16 A..20 A)		18 kW..27 kW (26 A..39 A)			
Chosen capacity / current	11 kW / 16 A	13.5 kW / 20 A	18 kW / 26 A	21 kW / 30 A	24 kW / 35 A	27 kW / 39 A
Electrical connection	3~ / PE 380..415 V AC		3~ / PE 380..415 V AC			3~ / PE 400 V AC
Min. required cable size 1) ^	1.5 mm²	2.5 mm²	4.0 mm²	4.0 mm²	6.0 mm²	6.0 mm²
Hot water (l/min) max. at Δt = 28 K max. at Δt = 38 K	5.6 2) 4.1	6.9 2) 5.1 2)	9.2 2) 6.8	10.7 2) 7.9	12.3 2) 9.0 2)	13.8 2) 10.2 2)
Rated volume	0.4 l					
Rated pressure	1.0 MPa (10 bar)					
Connecting type	Pressure-resistant / Pressureless					
Heating system	Bare wire heating system IES®					
@ 15 °C: Required specific water resistance Specific electrical conductivity	≥ 1100 Ωcm ≤ 90 mS/m					
Inlet temperature	≤ 30 °C					
Flow rate to switch on – max. flow rate	1.5 l/min – 5.0 3)		1.5 l/min – 8.0 3)			
Pressure loss	0.08 bar at 1.5 l/min 1.3 bar at 9.0 l/min 4)					
Temperature range	35 °C / 38 °C / 42 °C / 48 °C / 55 °C					
Water connection	G ½ inch					
Weight (when filled with water)	4.2 kg					
VDE class of protection	I					
Type of protection / safety	IP25 CE					

*) The declaration complies with the EU regulation No 812/2013.
Rated currency is provided based on Germany standard, ie. 400V, 18kW/√3/400=26A
^ Actual wiring size based on EMSD Code Of Practice For Electricity (wiring) Regulation's Appendix A6(1)
1) Maximum applicable cable size is 10 mm² at electrical connection from above
2) Mixed water
3) Flow rate limited to achieve optimum temperature rise
4) Without flow regulator

- All information in this manual is for reference only. If there are any errors or omissions, the specifications produced by the factory shall prevail. Specification is subjected to change without prior notice.
- If there is any inconsistency or ambiguity between the English version and the Chinese version of this manual, the English version shall prevail.
- Refer to www.germanpool.com for the most up-to-date version of the Operating Instructions.

3. Environment and Recycling

Your product was manufactured from high-quality, reusable materials and components. Please respect in case of discarding that electrical devices should be disposed of separately from household waste at the end of their service life. Therefore, please take this device to a municipal collection point that return used electronic devices to the recycling system. Disposing it correctly will support environmental protection and will prevent any potential negative effects on human beings and the environment that could arise from inappropriate handling of these devices at the end of their service life. Please contact your local authority for further details of your nearest designated collection point or recycling site.

Business customers: If you wish to discard equipment, please contact your dealer or supplier for further information.

4. Dimensions

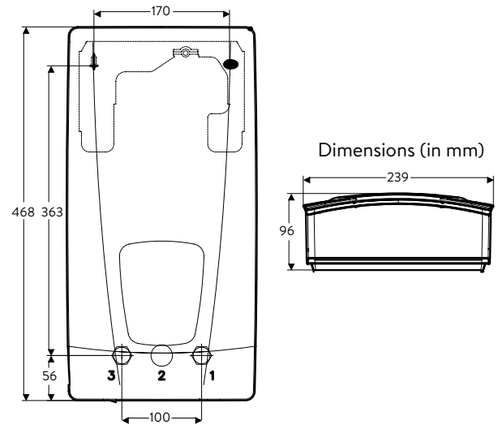

5. Installation



Based on Germany's guidelines a general test certificate concerning the evidence of applicability of noise behaviour is granted.

The following regulations must be observed:

- e.g. VDE 0100
- EN 806
- Installation must comply with all statutory regulations, as well as those of the local electricity and water supply companies.
- The rating plate and technical specifications
- Only intact and appropriate tools must be used

Installation Site

- Appliance must only be installed in frost-free rooms. Never expose appliance to frost.
- The Appliance must be wall mounted and has to be installed with water connectors downward or alternative transversely with water connections left.
- The appliance complies with protection type IP25 and may therefore be installed in protection zone 1 according to VDE 0100 part 701 (IEC 60364-7).
- In order to avoid thermal losses, the distance between the instantaneous water heater and the tap connection should be as small as possible.
- The appliance must be accessible for maintenance work.
- Plastic pipes may only be used if they conform to DIN 16893, Series 2.
- The specific resistance of the water must be at least 1100 Ω cm at 15 °C. The specific resistance can be asked for with your water distribution company.

Mounting Accessories

For installations under difficult conditions, these mounting accessories are available:

RDX 3

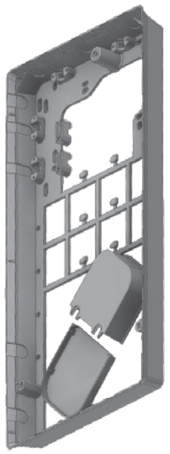

Mounting Frame Kit RDX 3

(Art. no. 36100)

The instant water heater can be installed by means of this mounting kit when the power supply cable is coming out of the wall at any place from behind the unit, or the wall has unusual surface conditions, making it difficult for installing the water heater.

When using the RDX the protection class changes from IP25 to IP24.

VDX

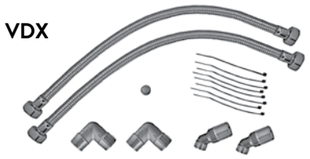

Extension Kit VDX

(Art. no. 34120) – RDX is necessary! –

The instant water heater can be installed by means of this extension kit if the water pipes are coming displaced or exchanged out of the wall or if they are coming edgewise on the wall to the unit. The power supply could come out of the wall at any place under the unit or the wiring could be installed surface-mounted.

UDX

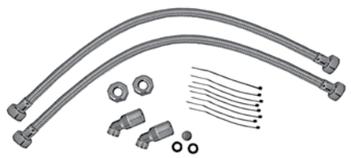

Extension Kit UDX

(Art. no. 34110) – RDX is necessary! –

The instant water heater can be installed by means of this extension kit if the water-connections are expiring above the unit. The power supply could come out of the wall at any place under the unit or the wiring could be installed surface-mounted.

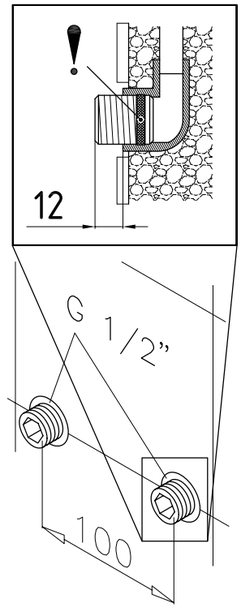

Installing the Wall Bracket

Note: If you install this instantaneous water heater in exchange for a conventional instantaneous water heater, there is generally no need to drill holes for the wall bracket, in this case step 2 would not be necessary.

Thoroughly rinse the water supply pipes before installation to remove soiling from the pipes.

1. Using a 12 mm hexagon socket screw key, screw the screw-in nipples into the wall connections. The seals must be fully screwed into the thread. After tightening, the double nipples must protrude by 12 – 14 mm.
2. Hold the included mounting template on the wall and align it so that the holes in the template fit over the double nipples. Mark the drill holes according to the template and drill them using a 6 mm drill. Insert the included dowels.
3. Pull down the faceplate and unscrew the main hood screw to open the appliance.
4. Loosen the knurled nut to remove the wall bracket and screw the wall bracket to the wall. Offset tiling or uneven surfaces can be compensated by up to 30 mm with the aid of the spacers supplied. The spacers are fitted between the wall and the wall bracket.

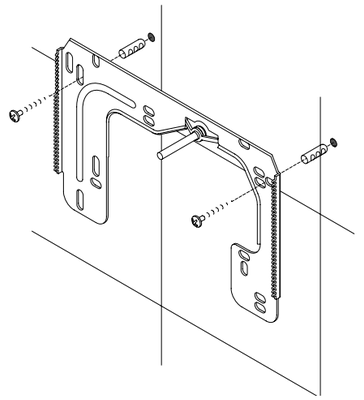

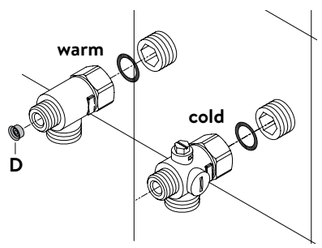

Installing Connection Pieces

Note: Fasten the screw nuts with caution, to avoid damage to the valves or the piping system.

1. As shown in the illustration, screw the cold water connection piece with the union nut and the ½ inch seal onto the cold water connection.
2. Screw the hot water connection piece with the union nut and the ½ inch seal onto the hot water connection.
3. Put the water flow reducer “D” into the hot water connection piece.

5. Installation

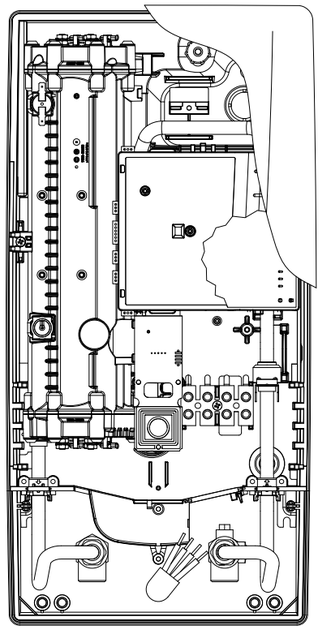

Installing the Appliance

The electrical power supply cable may be connected in the upper part or is surface mounted. Only in such case, first follow the steps one through three according to the description “Electrical connection from above” in chapter “Electrical connection”.

1. Place the appliance on the heater bracket so that the threaded rod of the wall bracket fits in the corresponding hole of the appliance. If necessary, slight corrections are possible by carefully bending the threaded rod of the wall bracket. However, it must be possible to screw on the water connection pipes of the appliance without applying force.
2. Screw the plastic knurled nut onto the threaded rod of the wall bracket.
3. Screw the two ⅜ inch union nuts of the appliance‘s water connection pipes, each with the ⅜ inch seal, onto the fittings.
4. Open the water supply line to the unit and slowly open (position “open“) the shut-off valve (a) in the cold water connection piece. Check all connections for leaks.
5. Next, open and close the hot water tapping valve several times until no more air emerges from the line and all air has been eliminated from the instantaneous water heater.

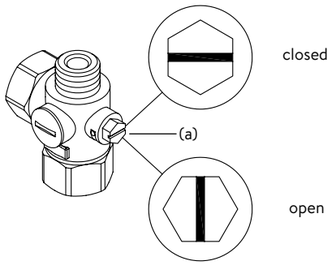

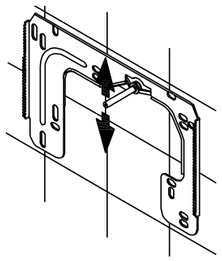

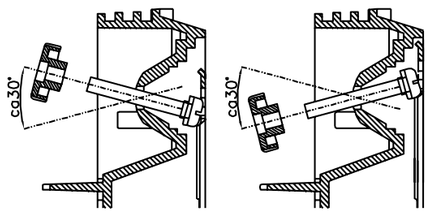

Attention: Inspection Panel Opening

If DCN is to be installed in a sealed space (eg. under the ceiling with decorative paneling), must leave a 600x600 mm inspection panel for future maintenance and repair.

6. Direct Connection

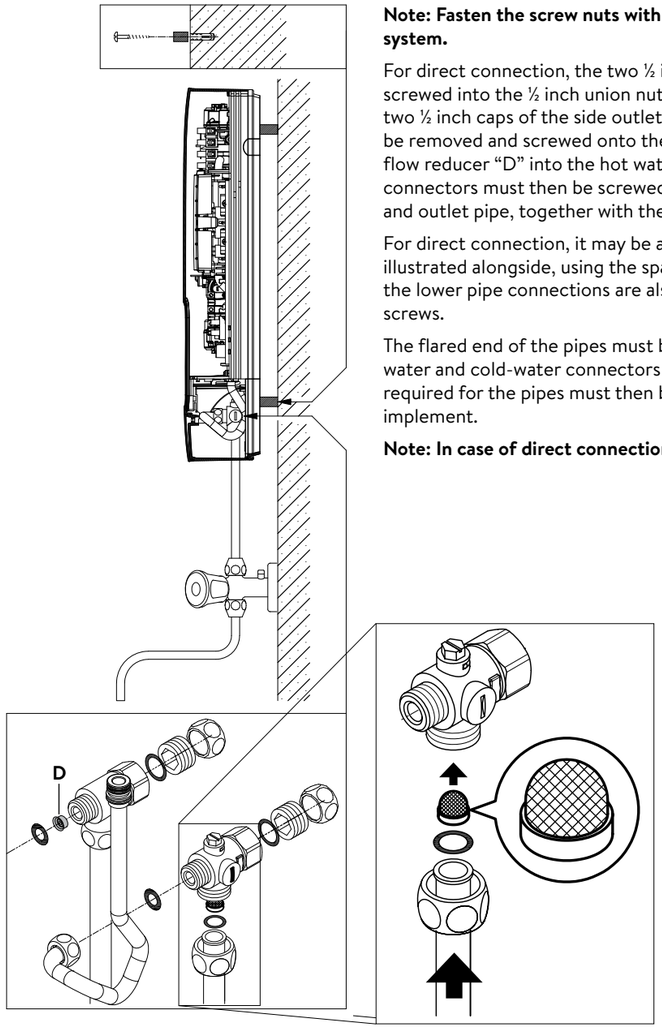

Note: Fasten the screw nuts with caution, to avoid damage to the valves or the piping system.

For direct connection, the two ½ inch screw-in nipples and the ½ inch seals must be screwed into the ½ inch union nuts of the hot-water and cold-water connectors. The two ½ inch caps of the side outlets of the hot-water and cold-water connectors must be removed and screwed onto the open end of the screw-in nipples. Put the water flow reducer “D” into the hot water connection piece. The hot-water and cold-water connectors must then be screwed into the 3/8 inch union nut of the appliance inlet and outlet pipe, together with the 3/8 inch seals.

For direct connection, it may be advisable to mount the appliance at a distance as illustrated alongside, using the spacer sleeves supplied. The two fixing holes near the lower pipe connections are also to be professionally fixed with 6 mm dowels and screws.

The flared end of the pipes must be screwed into the ½ inch side outlets of the hot-water and cold-water connectors with ½ inch union nuts and ½ inch seals. The holes required for the pipes must then be opened of the housing with the aid of a blunt implement.

Note: In case of direct connection, put the strainer into the cold water connection!

Wiring Diagram

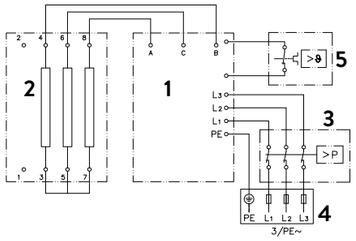

1. Electronic circuitry
2. Heating element
3. Safety pressure cut-out
4. Connecting terminal
5. Safety thermal cut-out

Note: Installation work must only be conducted by an authorised professional.

Please observe:

- **e.g. VDE 0100**
- **The installation must comply with current IEC and national local regulations or any particular regulations, specified by the local electricity supply company**
- **The rating plate and technical specifications**
- **The appliance must be earthed!**

Structural Prerequisites

- The appliance must be installed via a permanent connection. Heater must be earthed!
- The electric wiring should not be injured. After mounting, the wiring must not be direct accessible.
- An all-pole disconnecting device (e.g. via fuses) with a contact opening width of at least 3 mm per pole should be provided at the installation end.
- To protect the appliance, a fuse element with trigger characteristic C must be fitted with a tripping current commensurate with the nominal current of the appliance.

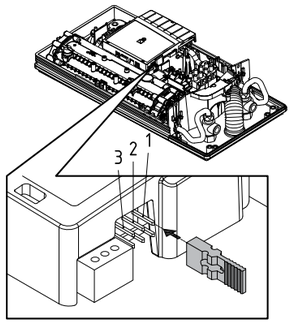

Load Shedding Relay

If further three-phase appliances are connected, a load shedding relay designed for electronic instantaneous water heaters (Art no. 82250) can be connected to phase conductor L2.

To avoid possible jitter of the load shedding relay caused by low power consumption (low temperature set point and low water flow rate) the “Load-shedding-mode” can be activated as followed:

- Disconnect the appliance from the power supply (e.g. by switching of the fuses)
- Take the jumper off the power electronics and change to position “1” (see picture).
- Put the appliance into operation again.

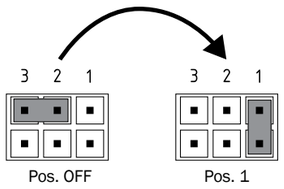



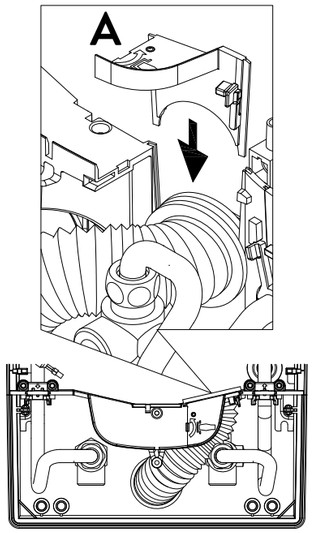

Electrical Connection from Below

Note: If necessary, the connecting terminal can be displaced to the upper part of the appliance. If you want to do so, please follow the instructions in the next chapter.

Check that the power supply is switched off prior to electrical connection!

1. Dismantle approximately 6 cm off the connecting cable above the wall outlet. With the smaller opening ahead, slide the water splash protection sleeve over the connecting cable so that the sleeve is flush with the wall. This prevents any leaking water from coming into contact with the electrical leads. It must not become damaged! **The protection sleeve must be used!**
2. Strip the cables and plug them in the connecting terminals according to the wiring diagram. **The appliance must be earthed.**
3. Pull the protective sleeve over the connecting cables until the sleeve fits perfectly in the recess of the intermediate panel. Adjust the water splash protection sleeve as illustrated and fix it with the sleeve fixing (A).

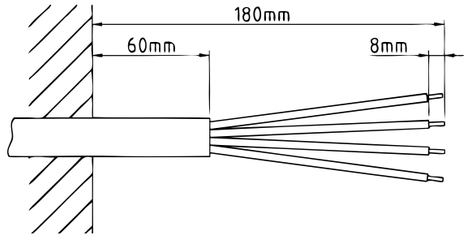



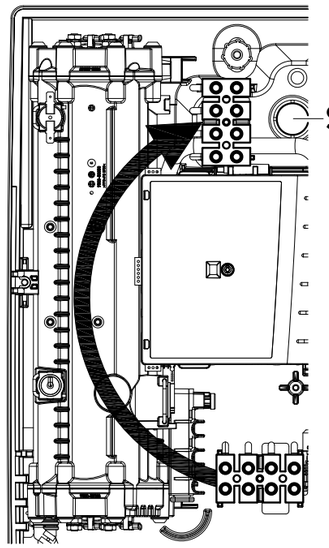

Electrical Connection from Above

Check that the power supply is switched off prior to electrical connection!

1. Open the prepared breaking point (S) in the upper part of the appliance by pressing with a blunt implement (e.g. screwdriver).For surface-mounted connection cable additional open the breakout at the right side of the bottom part.
2. Slit the grommet to match the cable size. The opening in the grommet should be slightly smaller than the cross-section of the cable in order to ensure optimum protection against water. Fit the grommet into the opening. **The protection grommet must be used!**
3. Strip the connection cable so that the sheath extends through the grommet into the appliance. Hold the prepared appliance in one hand and route the cable into the grommet with the other hand.
4. Place the appliance on the wall bracket so that the threaded rod of the wall bracket fits in the corresponding hole of the appliance and fix the appliance and fix it with the knurled nut.
5. Unscrew the fastening screw of the connecting terminal. Displace the connecting terminal to the upper foot. Affix the connecting terminal again.
6. Strip the individual wires of the connecting cable and plug them in the connecting terminals according to the wiring diagram. **The appliance must be earthed.**

Note: To ensure IP25 protection class, please don´t remove the bottom water splash protection sleeve.

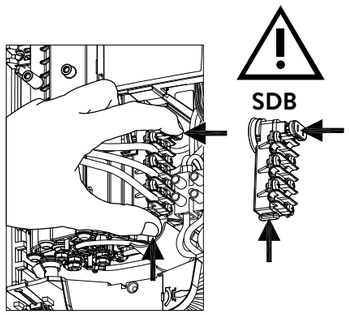

WARNING: Before making the electrical connection, fill the mains and the appliance with water by carefully opening and closing the hot water tap in order to vent completely.

To ensure a maximum flow, remove any existing aerator from the faucet. Flush the warm and cold water pipes each at least for one minute.

After every draining (e.g. after work on the plumbing system or following repairs to the appliance), the heater must be re-vented in this way before starting it up again.

If the water heater cannot be put into operation, the temperature cut-out or the pressure cut-out may have tripped during transport. If necessary, check that the power supply is switched off and reset the cut-out.

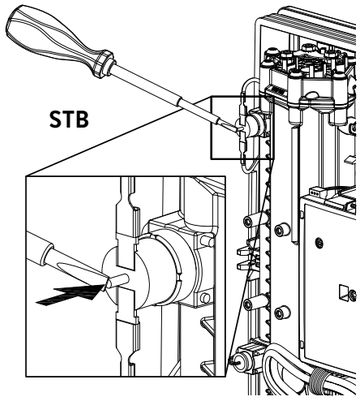

Selection of Power Rating

Only by authorised specialist, otherwise lapse of guarantee!

Before first connection of the appliance to the supply voltage, select the maximum power rating.

The maximum allowable power rating at installation site depends on the local situation. It is imperative to observe all data shown in the table “Technical specifications”, in particular the required cable size and fuse protection for the electrical connection. Moreover, the electrical installation must comply with the statutory regulations of the respective country and those of the local electricity supply company (Germany: DIN VDE 0100).

Multiple Power System MPS®:

The DCN’s capacity can be changed internally to 27 kW, 24 kW, 21 kW or 18 kW at 400 V.

The DCN13’s capacity can be changed internally to 13.5 kW or 11.0 kW at 400 V.

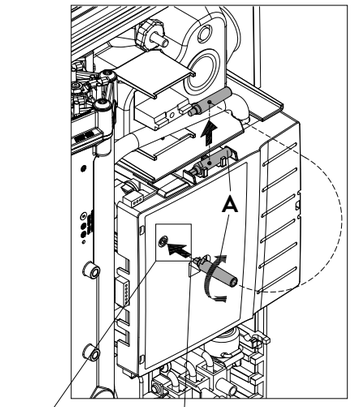

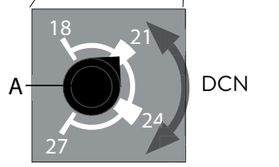

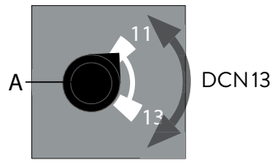

1. Select the maximum allowable power rating depending on the local situation. To do this, take the auxiliary tool “**A**” from the holder on the electronics cover and turn the switch to the desired value.

DCN		DCN13	
left stop	18 kW	first click	11 kW
first click	21 kW	second click	13.5 kW
second click	24 kW		
right stop	27 kW		

2. Put the auxiliary tool back into the holder, connect the control panel cable to the control panel in the hood, place the hood on the appliance and fix it with the hood screw.
   Note: The control panel cable must not be pinched or squeezed.
3. Mark the set power rating on the rating plate and slide on the faceplate from the bottom up to the stop.
4. Switch on the power supply to the appliance.
5. After having set the maximum allowable power rating, the heating element will be activated after approx. 10 – 30 sec of continuous water flow.
6. Open the hot water tap. Check the function of the appliance.
7. Explain the user how the instantaneous water heater works and hand over the operating instructions.
8. Fill in the guarantee registration card and send it to the Germanpool Customer Service or use the online registration QR code supplied on page 2.

Note: Each time the supply voltage is switched on, the set power is indicated by alternating short and long flashes of both LEDs on the power section. If the switch is incorrectly positioned, this is indicated by continuous short flashes.

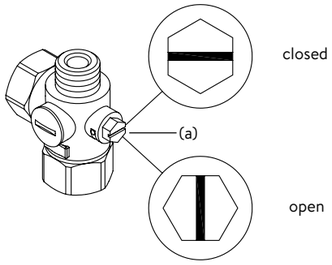

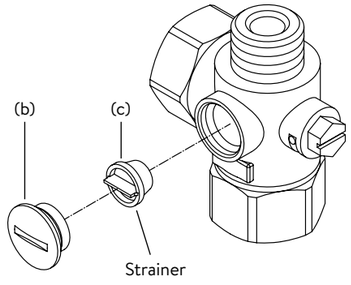

Attention: Maintenance work must only be conducted by an authorised professional.

Cleaning and Replacing the Filter Strainer

The cold water connection of this instantaneous water heater is equipped with an integrated shut-off valve and a strainer. Soiling of the strainer may reduce the warm water output. Clean or replace the strainer as follows:

1. De-energize the instantaneous water heater (e.g. via deactivating the fuses) and prevent inadvertent reactivation of them.
2. To open the appliance, take off the small face plate, loose the screw behind this cover and detach the hood.
3. Close the shut-off valve (a) in the cold water connection piece (position “closed“).
4. Unscrew the screw plug (b) from the cold water connection piece and take out the strainer (c).
   Note: Residual water can leak
5. The strainer can now be cleaned or replaced.
6. After fitting of the clean strainer tighten the screw plug.
7. Slowly reopen the shut-off valve in the cold water connection piece (position “open“). Check all connections for leaks.
8. Vent the appliance by carefully opening and closing the affiliated warm water tap valve several times until air no longer emerges from the pipe.
9. Connect the control panel cable to the control panelin the hood, replace the hood and tighten the hood screw.

Note: The control panel cable must not be pinched or squeezed.
Then switch on the power again (e.g. via activating the fuses).

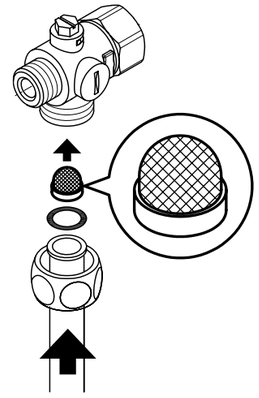

Cleaning and Replacing the Filter Strainer if Direct Connected

The cold water connection of this instantaneous water heater is equipped with a strainer. Soiling of the strainer may reduce the warm water output. Clean or replace the strainer as follows:

1. De-energize the instantaneous water heater (e.g. via deactivating the fuses) and prevent inadvertent reactivation of them.
2. Close the shut-off valve in the mains water supply of the instantaneous water heater.
3. To open the appliance, pull down the faceplate and unscrew the main hood screw. Lift the hood carefully, remove the plug from the control panel and note the position of the plug.
4. Unscrew mains water inlet from connection piece and take out the strainer.
   Note: Residual water can leak
5. The strainer can now be cleaned or replaced.
6. After refitting the clean strainer reconnect the mains water inlet to the connection piece.
7. Slowly reopen the shut-off valve in the mains water supply. Ensure that there are no leakages.
8. Vent the appliance by carefully opening and closing the affiliated warm water tap valve several times until air no longer emerges from the pipe.
9. Connect the control panel cable to the control panel in the hood, replace the hood and tighten the hood screw.

Note: The control panel cable must not be pinched or squeezed.
Then switch on the power again (e.g. via activating the fuses).

目錄

操作說明

安全注意事項 5
1. 熱水器簡介 25
2. 使用指示 26
　溫度設定 26
　功率極限 26
　設備信息 26
　保養工作後的排氣程序 27
　清潔與保養 27
3. 檢查要點 28

安裝說明

1. 概觀圖 29
2. 規格 30
3. 環保及循環再造 30
4. 尺寸 31
5. 安裝 31
　安裝地點 31
　裝掛配件 32
　安裝牆上掛碼 33
　安裝接駁配件 33
　安裝熱水器 34
6. 直接接駁 35
7. 電線接駁 36
　線路圖 36
　結構要求 36
　減載繼電器 36
　從機底接駁電線 37
　從機頂接駁電線 37
8. 初次啟動 38
　功率選擇 38
9. 保養 40
　清洗及更換沙隔 40
　直接接駁時清潔並更換沙隔 40
保用條款 43

1. 熱水器簡介

提示：在安裝、初次啟動和使用本設備前，請仔細閱讀安全說明，並在後續步驟和使用過程中嚴格遵循！



DCN/DCN13即熱式熱水器是一種全電子控制的抗壓即熱式熱水器，可將熱水供應至一個或多個水龍頭出水位。

其電子控制系統會視乎選定出水溫度、相應入水位的水溫和流量自動調控耗電量，從而精準達到設定的出水溫度，並在水壓波動的情況下保持恒定。出水溫度可透過中央感應鍵設定為35°C. 38°C. 42°C. 48°C. 55°C。

若入水溫度低且水流量高，則會因熱水器的效能已超越上限而無法達到預設的出水溫度。降低水龍頭的水流量即可提高出水溫度。

本即熱式熱水器可與電子式即熱式熱水器專用的外接減載繼電器搭配使用（請參閱安裝指示）。

打開熱水水龍頭時，本即熱式熱水器隨即自動啟動。關上水龍頭時，本熱水器即自動關閉。本熱水器可透過設備本身或另購的無線遙控器操作。

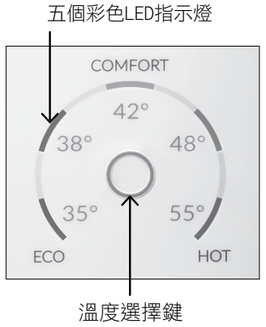

温度設定

你可利用温度選擇鍵〇快速選擇熱水器常用的五種預設温度之一：「洗手」35°C、「淋浴」38°C、「泡澡」42°C、「廚房」48°C或「清洗」55°C。

每按一下按鍵即可將温度設為下一個等級：
35°C〇38°C〇42°C〇48°C〇55°C〇

再按下〇鍵，即可重新循環。

本熱水器具有五個彩色LED指示燈，其中一個會亮起
以指出目前所選温度。

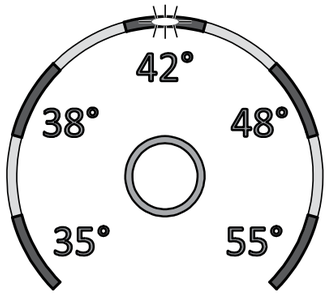

功率極限

如果即熱式熱水器DCN的全部功率輸出不足以加熱現時水量（例如：在冬季，一次打開多個水龍頭時），LED指示燈將會閃爍來提示。當降低熱水流量時，由於設備的輸出再次足以達到設定温度，因此LED指示燈再次常亮。

設備信息

按住温度選擇鍵10秒進入信息模式。10秒後，所有LED指示燈短暫地亮著一次，然後熄滅，以確認啟動信息模式。設備狀態將通過LED指示燈顯示：

左下方LED指示燈：熄滅=無水流；閃爍=水流量低於開啟點；常亮=水流量高於開啟點。
中上方LED指示燈：常亮=加熱中；閃爍=已達功率極限；熄滅=不在加熱中。
右下方LED指示燈：熄滅=設備正常；閃爍=檢測到錯誤（聯絡客戶服務及維修中心）

60秒後或按鍵後，顯示屏將恢復正常操作。



保養工作後的排氣程序

熱水器備有自動氣泡保護功能以防止非故意乾燒情
況。唯初次啟用前，必須先排氣。但每次熱水器因水喉工程、有結霜可能、或維修而需排出儲水，必需將熱水器內空氣排出，方能再次使用。

1. 關掉熱水器電源總掣(例如關掉保險絲)。
2. 拆下出水位的射流調節器，開啟冷水龍頭清洗水管，以免污染熱水器及射流調節器。
3. 開啟再關閉熱水龍頭，直至水管內不再排出空氣，及熱水器內空氣已完全排出。
4. 然後重新接駁電源(例如保險絲)，裝回射流調節器。
5. 約10秒的不停水流將啟動熱水器。

清潔與保養

- 塑料表面及配件只可用濕布擦拭。請勿使用腐蝕性或含氯元素之清潔劑或溶劑。
- 為確保良好供水，應定期擰開並清洗出水口配件（特別是射流調節器及花灑噴頭）。每隔三年，電氣和水管組件應由授權專業人士檢查，以確保安全正常運作。

3. 檢查要點



只有經認可的專業人員方可進行維修。
若按照以上表格所列方法無法排除熱水器故障，請聯繫德國寶客戶服務及維修中心。請記錄銘牌詳細資訊。

本熱水器出廠前經多次反覆測試，如有故障，一般由小問題引致。首先可嘗試重新開關電源重設電子設定。其次可參考以下列表措施解決問題，這樣可節省不必要的維修費用。

DCN / DCN13		
問題	**原因**	**解決方案**
出水為冷水，LED指示燈不亮	總保險絲跳閘	更換或接通保險絲
	限壓斷電安全裝置跳閘	聯繫客服中心
出水為冷水，LED指示燈亮著	感溫斷電安全裝置跳閘	聯繫客服中心
出水為冷水，所有LED指示燈閃爍	內部錯誤	聯繫客服中心
出水為熱水，所有顯示屏閃爍 (除卻溫度顯示屏)	設備檢測到錯誤	聯繫客服中心
熱水流速過低	出水口配件變髒或鈣化	清潔花灑頭、射流調節器或過濾網
	精濾器變髒或鈣化	聯繫客服中心清潔精濾器
溫度LED指示燈閃爍	達到功率極限	減少水龍頭溫水流量
不能達致所選溫度	通過水龍頭添加了冷水	僅使用熱水；設定溫度，檢查出水溫度
感應鍵無法正確回應或僅間歇回應	顯示屏濕了	用軟布擦乾顯示器

1. 概觀圖

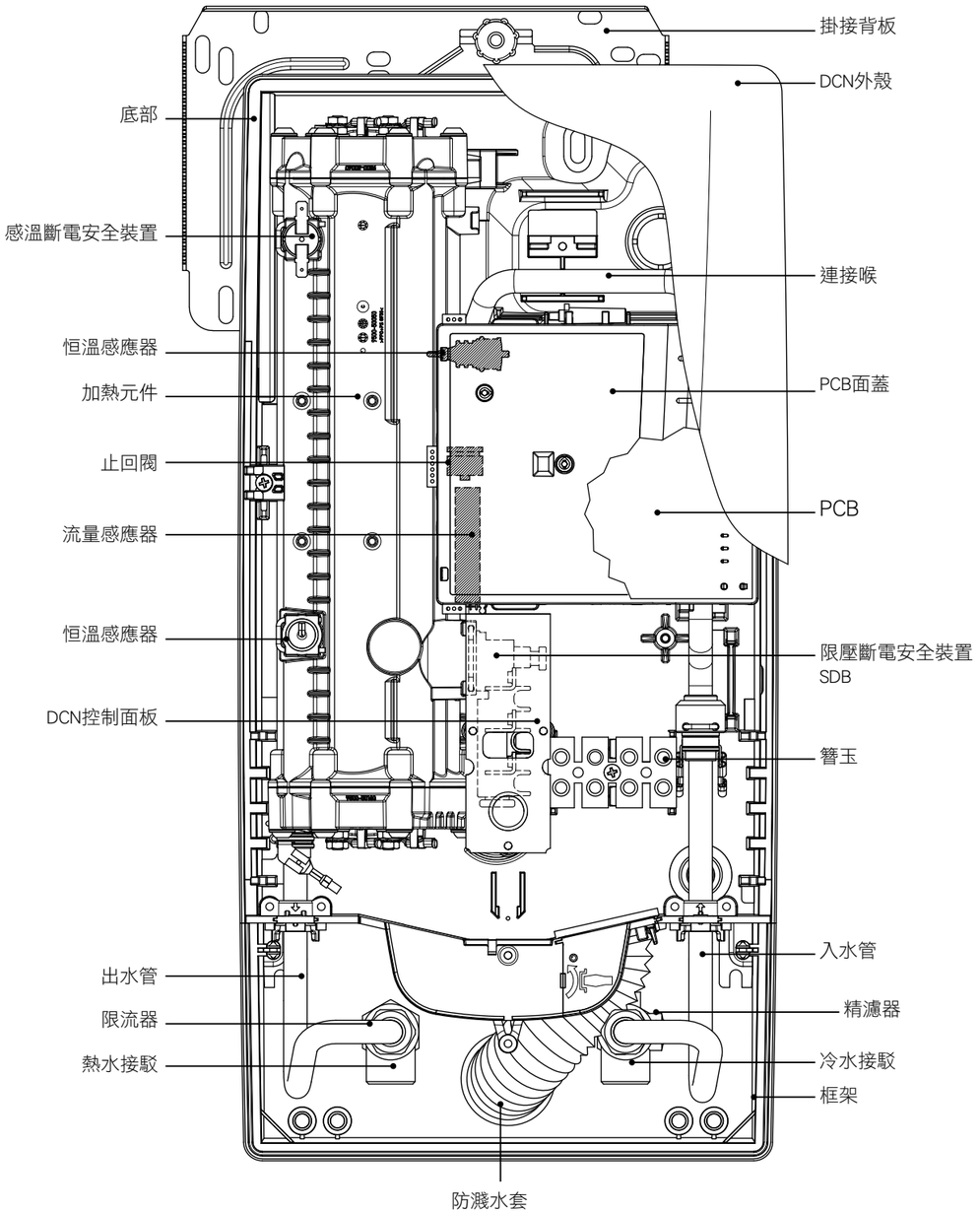



旋入杭牙1/2”



電線封套

2. 規格

型號	DCN13		DCN			
歐盟能源效益標	A *)					
額定功率 / 額定電流#	11kW..13.5kW (16A..20A)		18kW..27kW (26A..39A)			
選擇功率 / 電流	11kW / 16A	13.5kW / 20A	18kW / 26A	21kW / 30A	24kW / 35A	27kW / 39A
電氣連接	3~/PE 380..415V AC		3~/PE 380..415V AC			3~/PE 400V AC
所需最小電線尺寸 1)^	1.5mm²	2.5mm²	4.0mm²	4.0mm²	6.0mm²	6.0mm²
熱水（公升/分鐘） 最大值 Δt = 28 K 最大值 Δt = 38 K	5.6 2) 4.1	6.9 2) 5.1 2)	9.2 2) 6.8	10.7 2) 7.9	12.3 2) 9.0 2)	13.8 2) 10.2 2)
額定容量	0.4l					
額定壓力	1.0MPa (10bar)					
連接類型	耐壓 / 無壓					
加熱系統	裸線加熱系統IES					
水溫為15℃時的比電阻 導電性	≥ 1100 Ωcm ≤ 90mS/m					
入水溫度	≤ 30° C					
啟動流速 - 最高流速	1.5l/min - 5.0 3)		1.5l/min - 8.0 3)			
壓力損耗	0.08bar at 1.5l/min 1.3bar at 9.0l/min 4)					
溫度選擇	35° C / 38° C / 42° C / 48° C / 55° C					
水管接頭	G1/2 inch					
重量（裝滿水後）	4.2kg					
VDE防護等級	I					
防護 / 安全類型	IP25 CE					

*) 符合歐盟法規No.812/2013的要求
#額定電流以德國標準計算，例如：18kW/√3/400=26A
^電線尺寸根據機電工程署的電力（線路）規例工作守則表A6(1)
1) 若從熱水器頂部接駁電源，最大電線尺寸10平方毫米
2) 混合熱水
3) 限流目的為達到最佳溫度上升效果
4) 不設限流器

・所有資料僅供參考，如有錯漏以廠方生產的規格為準。產品規格及設計如有變更，恕不另行通知。
・中英文版本如有出入，一概以英文版為準。
・本產品使用說明書以ww.germanpool.com網上版為最新版本。

3. 環保及循環再造

本產品由高質量、可重複使用的材料和組件製成。請注意在使用壽命結束時，如果要丟棄電子設備，應將其與生活垃圾分開處理。因此，請將本設備帶到市政收集點，將用過的電子設備進行回收。正確處理該設備將有助於保護環境，並避免在使用壽命到期時因對這些設備的不當處理而導致對人類和環境造成任何潛在的負面影響。請與您當地的當局聯繫，以獲取離您最近回收站的更多詳細信息。

商業客戶：如果您希望丟棄本設備，請聯繫您的經銷商或供應商以獲取更多信息。

4. 尺寸

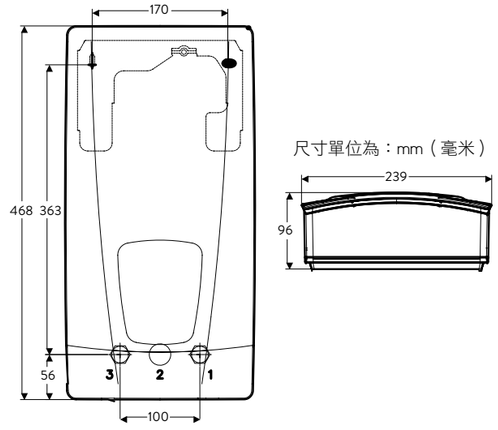

5. 安裝

CLAGE
Lüneburg
DIN 4109
PA-IX 16951/I
MPA NRW.

根據德國準則，頒發了有關噪音行為適用性證據的通用測試證書。

安裝時必需遵照下列守則：

- e. g. VDE 0100
- EN 806
- 當地有關之電線安裝條例、安全標準、電力供應商或水務署之安全條例。
- 銘牌上的產品規格。
- 必須使用完好和適當的工具。

安裝地點

- 必須安裝於全年都不結霜之房間內。切勿讓熱水器暴露於霜雪中。
- 此熱水器只可作掛牆式安裝，出入水接駁喉位向下，如橫向安裝，水管接駁喉必須置放於左邊。
- 根據VDE 0100 part 701 (IEC 60364-7)，熱水器的防護等級為IP25，熱水器必須安裝於保護區1內。
- 為避免失溫，應將熱水器安裝於最接近出水位置。
- 該設備必須安裝於易於維修保養的位置。
- 如選用膠喉，該膠喉必須符合DIN 16893 Series 2規格。
- 來水於15℃時，水電阻最少應為1,100Ω cm。有關詳情可向水務署查詢。

裝掛配件

若所選熱水器安裝地點難以安裝，可選配下列裝掛

配件：
裝掛套裝 RDX3
(序號：36100)
在下列情況，可以用此裝掛套裝來安裝熱水器。當安裝牆壁表面不平均，而電源線出線位又正在這表面之上，令熱水器難以安裝。
使用RDX時，保護等級從IP25更改為IP24。

RDX 3

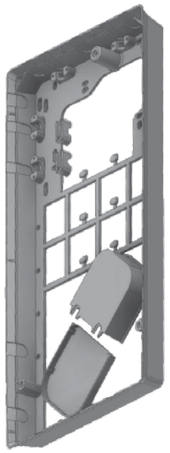

VDX

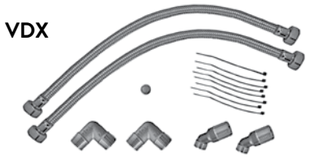

擴展套件 VDX
(序號：34120) - 必須與RDX同時使用
在下列情況，此擴展套件可以用來安裝熱水器。當水管冷熱水位倒置、水管出牆位置需要改動、或熱水器位置貼近牆壁邊緣時使用。電源線可從熱水器的下方出牆或以明線安裝。

UDX

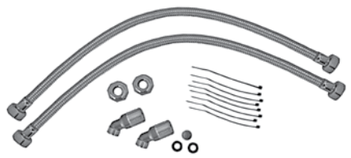

擴展套件 UDX
(序號：34110) - 必須選用RDX
在下列情況，可以用此擴展套件來安裝熱水器。當水管在熱水器之上方連接。電源線從熱水器的下方出牆或以明線安裝。

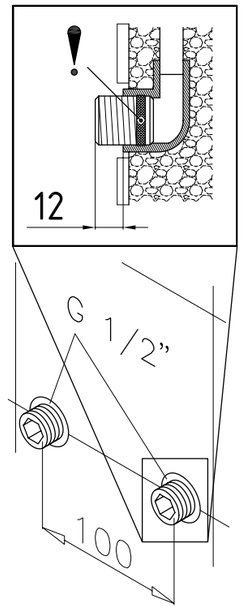

安裝牆上掛碼

注意：如果此即熱式熱水器用以更換傳統形式即熱式熱水器，一般無需於牆上再另外鑽孔安裝。在此情況下，無需理會步驟2。

安裝前先徹底清洗供水喉管，去除管內任何污垢。

1. 用12毫米六角匙將杭牙旋入牆上接駁位置，密封墊必須完全旋入螺齒內。旋妥杭牙後，杭牙應外露12-14毫米。
2. 將附上的模板放在牆上適當位置以配合杭牙位置。根據模板位置記下鑽孔位置，用6毫米鑽咀鑽孔，放入固定銷旋入掛碼。
3. 請拉下面板並擰下主蓋螺絲以打開設備。
4. 鬆開牆上掛碼的滾花螺母，卸下牆上掛碼，然後將掛碼擰在牆上。 借助隨附的墊片，最多可補償30毫米的傾斜瓷磚或不平整的表面。將墊片安裝在牆壁和牆上掛碼之間。

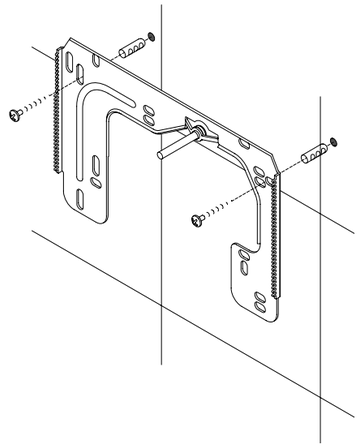

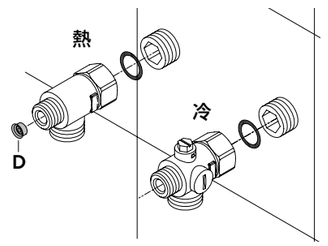

安裝接駁配件

注意：旋緊螺母時應小心避免損壞閥或喉管。
1. 如圖所示將緊固螺母及1/2”密封圈連接上冷水進水配件。
2. 將緊固螺母1/2”密封圈連接上熱水出水配件。
3. 將水流限制器”D”放入熱水出水配件。O型圈必須可見。

5. 安裝

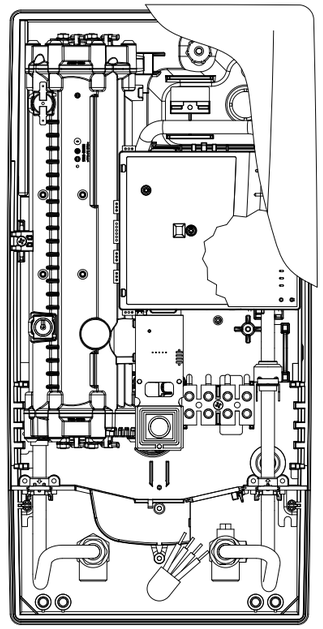

安裝熱水器

電源電纜可以連接在熱水器上部或以明線安裝。僅在這種情況下，首先按照「電線接駁」章節中的「從機頂接駁電線」部分的指示執行步驟1至3。

1. 將熱水器掛在掛接背板上，如有需要可小心將略為螺紋棒彎曲。注意，彎曲螺紋棒後旋上進出水配件時應無需使用蠻力。
2. 將塑膠滾花螺母旋入牆上掛碼螺紋棒上。
3. 將兩個3/8”緊固螺母及3/8”密封圈旋入進出水管連接配件內。
4. 打開連接熱水器的冷水供水喉，慢慢旋開冷水連接配件的閘掣(a)（位置：開），查看有否滲漏。
5. 接著連續來回打開及關閉熱水龍頭數次，直至水龍頭再沒有空氣排出，及熱水器內的空氣已完全排出。

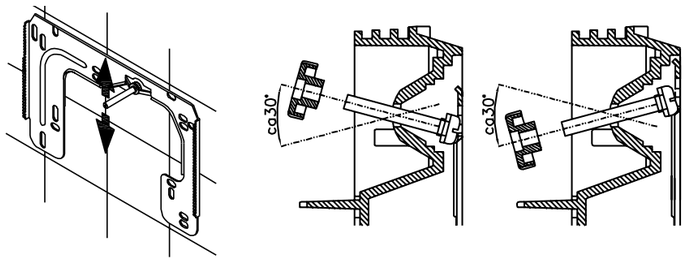

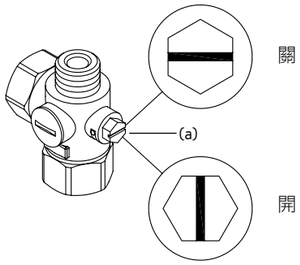

注意：預留生口位
如熱水器安裝在隱閉位置（例如石膏板假天花），必須預留600x600毫米生口位以便日後保養和維修之用。

6. 直接接駁

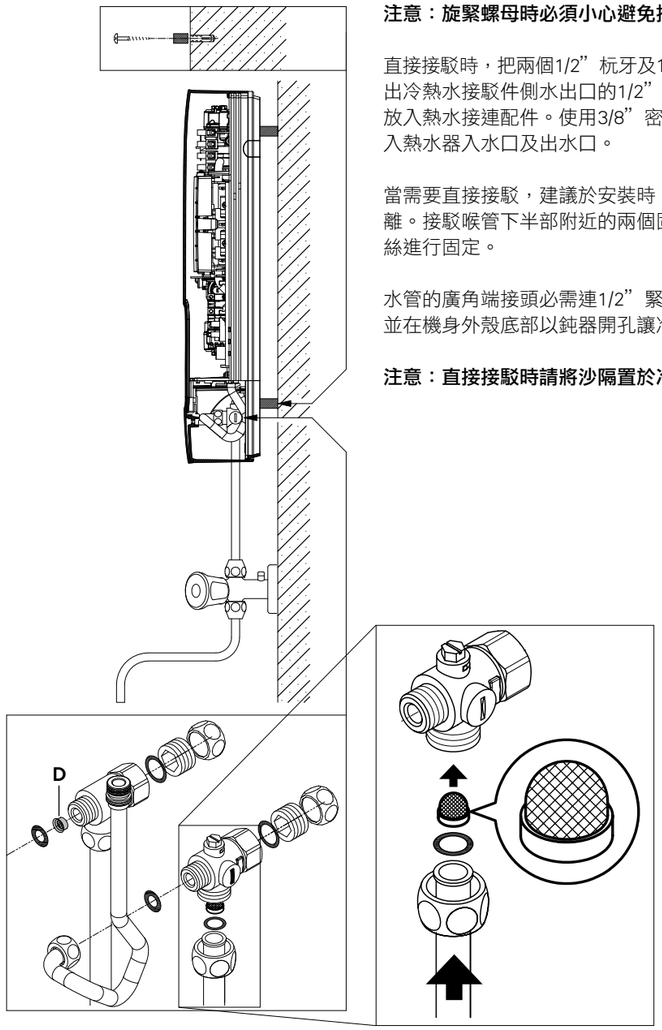

注意：旋緊螺母時必須小心避免損壞閥或喉管。

直接接駁時，把兩個1/2”杭牙及1/2”密封圈旋入冷熱水接駁件的1/2”緊固螺母內。取出冷熱水接駁件側水出口的1/2”密封帽，然後旋入杭牙外露的一端。將減水閥“D”放入熱水接連配件。使用3/8”密封圈及3/8”緊固螺母，將冷水及熱水的接連配件旋入熱水器入水口及出水口。

當需要直接接駁，建議於安裝時，使用跟機的間隔套讓熱水器跟牆壁保持一個合理距離。接駁喉管下半部附近的兩個固定孔，也應由專業技術人員以6毫米的固定銷和螺絲進行固定。

水管的廣角端接頭必需連1/2”緊固螺母及1/2”密封圈旋入冷熱喉的1/2”接連配件。並在機身外殼底部以鈍器開孔讓冷熱水喉穿過。

注意：直接接駁時請將沙隔置於冷水入水接駁位！

線路圖

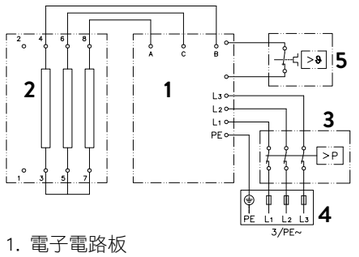

1. 電子電路板
2. 加熱元件
3. 限壓斷電安全裝置
4. 簪玉
5. 感溫斷電安全裝置

注意：必須由獲取認可資格的專業技師負責!

請注意：

- **e.g. VDE 0100**
- **必須按現行之IEC標準、當地的電線安全標準及法規、及根據任何當地電力供應商之標準或法規安裝。**
- **參照銘牌上註明的技術規格。**
- **熱水器必須接駁地線！**

結構要求

- 熱水器必須穩固永久接駁安裝。熱水器必須接駁地線！
- 電線不應損壞，安裝後電線不應可以直接觸摸得到。
- 電源開關應為全極式開關（經保險絲），兩極之間應保持最少3毫米距離。
- 為保護熱水器，必須安裝符合熱水器標稱電流、並具過載電流功能及開關設定特性為C類的保險絲。

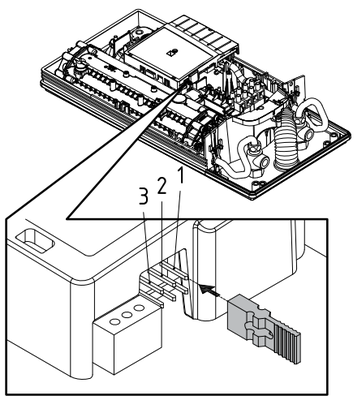

減載繼電器

如會同時接駁其他三相電器，可以將用專為電子即熱式熱水器設計的減載繼電器接駁至導電器L2。

為避免減載繼電器於低功耗（低溫設定或低水流）時抖動，可以用以下方法啟動減載繼電模式：

- 斷開熱水器電源（例如關掉保險絲）。
- 從電子控制板取下配線，並將其轉到位置“ 1”（參見圖片）。（見圖）。
- 再次運行熱水器。

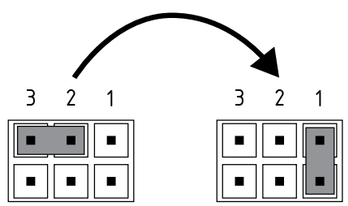

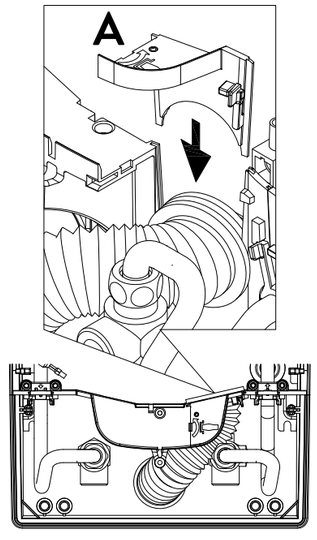

從機底接駁電線

注意：如有需要，可將簪玉移至熱水器上半部，如需這樣做，請參照下一部份指示。

⚠ 接駁電線前，必須先確定電源已關上！

1. 從牆壁插座位拉出約6厘米電線，套入防水管套，使管套與牆身齊平，確保如有漏水也不會沾濕電線，以保護電線完好。必須使用防水管套！
2. 剝去電線外皮並依著電路圖表將其接到簪玉上。此熱水器必須連接地線。
3. 將電線的防水管套拉上至完全覆蓋接駁電線，並調整接駁電線的形狀，使其在沒有壓力的情況下套入中間層板的凹位，並用套管固定件(A)進行固定。

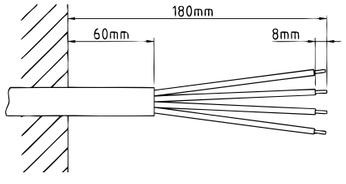

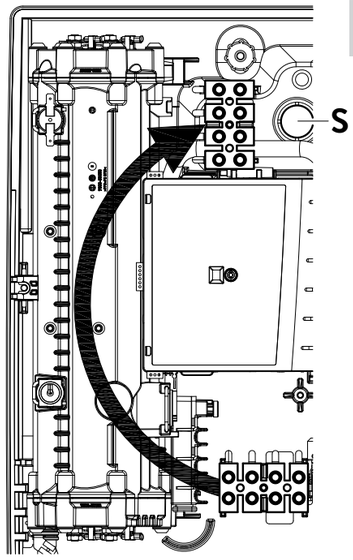

從機頂接駁電線

⚠ 接駁電線前，請必先確定電源已關上。

1. 用鈍器（例如螺絲批）按壓打開熱水器膠口上部的預設孔位(S)。如果採用明線安裝，則須同時打開熱水器右下方的預設孔位。
2. 介開配件套裝的電線固定環至符合電線粗度。介開的面積應略為比電線窄少許，以確保最佳的防水性能。將電線固定環安裝到開口中。必須使用電線保護固定環！
3. 剝開電線，讓電線保護套穿過電線固定環延伸到設備中。握住熱水器，以便您可以用另一隻手將電線佈線到固定環中。
4. 將熱水器掛在背碼上，讓背碼的螺紋柱套入熱水器相應的孔內。
5. 旋鬆電線接駁簪玉的螺絲，將簪玉移往上腳位，再接駁簪玉。
6. 剝開電線，按照線路圖接駁至簪玉。此熱水器必須接駁地線。

注意：為確保達到IP25防護等級，請勿移除底部的防水管套。



警告

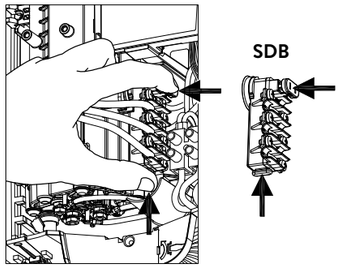

接駁電源前，先讓水注入喉管及熱水器內，然後慢慢開關熱水水龍頭數次，以將熱水器內的空氣完全排出。

為了確保最大流量，請拆除水龍頭上任何現有的加壓器。分別沖洗熱水和冷水管道至少1分鐘。

每次徹底排水之後(例如因為維修或水喉工程後)，必須先以此方法將熱水器內的空氣完全排出，方可再啟動熱水器。

若熱水器無法運行，有機會是運輸過程中感溫斷電安全裝置或限壓斷電安全裝置跳閘。如有必要，請檢查電源是否已關閉並重置安全裝置開關。

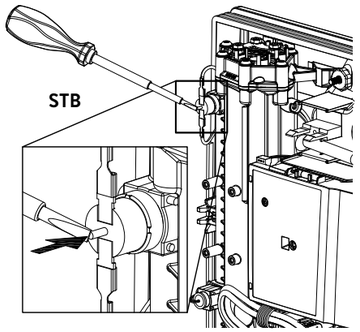

功率選擇

必須由註冊專業技師調校，否則保養作廢！

在初次接駁電源之前，選擇最大功率。

最大可容許功率需視乎安裝地點情況而定。必須注意技術規格表內所提供的全部資料，特別是電源線的要求及電線接駁的保險絲保護，所有電線接駁安裝必須遵照安裝地點的有關法例（德國：DIN VDE0100）。

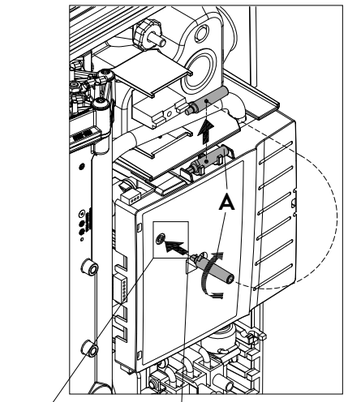

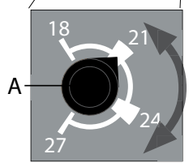

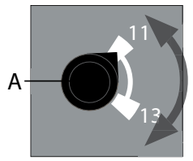

1. 根據當地情況選擇最大可容許功率，請從外殼的支架上取下輔助工具“A”，然後將開關調整到所需的數值。

DCN		DCN13	
最左	18 kW	第一格	11 kW
第一格	21 kW	第二格	13.5 kW
第二格	24 kW		
最右	27 kW		

2. 將輔助工具放回支架上，將控制面板電線連接至外殼上的控制面板，將外殼裝回熱水器，並以螺絲將其固定。

注意：請勿擠壓控制面板電線。

3. 在銘牌上標記設置的額定功率，然後將面板從下滑上套好。
4. 接通設備的電源。
5. 在設置最大可容許功率後，加熱元件將在持續水流約10–30秒後啟動。
6. 打開熱水龍頭，檢查熱水器功能。
7. 將使用說明交給客戶，並向客戶解釋熱水器怎樣操作。
8. 初步操作妥當後，請填妥及寄回保用證。

注意：每次接通電源時，功率部分上的兩個LED指示燈會長短交替閃爍以顯示設定功率。如果旋鈕的位置不正確，則會持續不斷閃爍作提示。

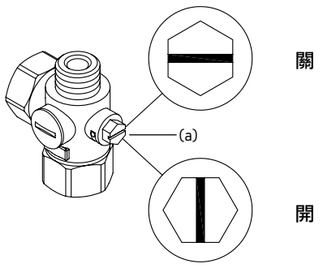

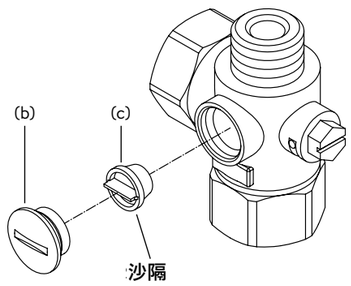

注意：必須由獲取認可資格的專業技師負責!

清洗及更換沙隔

熱水器的冷水入水接駁位配備有綜合式的閘制及沙隔，沙隔藏有污垢會減低熱水出水量，必須定時清理或更換。步驟如下：

1. 先關掉電源（例如關掉保險絲）以防止電源意外接通。
2. 請拉下面板並擰下外殼螺絲以打開設備。小心地提起外殼，從控制面板上拔下塞子，並記下塞子的位置。
3. 關掉冷水接駁件的閘制(a)（狀態：「關」）。
4. 從冷水喉旋出螺絲塞子(b)，然後取出沙隔(c)。

注意：殘留的水可能會漏出。

5. 清洗或更換沙隔。
6. 放回沙隔後，旋緊螺絲塞子。
7. 慢慢打開冷水接駁件的閘制（狀態：「開」）。確保沒有洩漏。
8. 慢慢開關相應的溫水龍頭數次直至熱水器內的空氣完全排出。
9. 將控制面板電線連接至外殼上的控制面板，將外殼裝回熱水器，並以螺絲將其固定。

注意：切勿擠壓控制面板電線。

然後再接通電源（例如打開保險絲）。

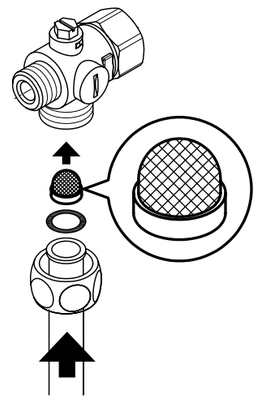

直接接駁時清潔並更換沙隔

熱水器的冷水入水接駁位配備有綜合式的閘制及沙隔，沙隔藏有污垢會減低熱水出水量，必須定時清理或更換。步驟如下：

1. 先關掉電源（例如關掉保險絲）以防止電源意外接通。
2. 關掉熱水器的主供水閘制。
3. 請拉下面板並擰下外殼螺絲以打開設備。小心地提起外殼，從控制面板上拔下塞子，並記下塞子的位置。
4. 從冷水喉旋出螺絲塞子，然後取出沙隔。

注意：殘留的水可能會漏出。

5. 清洗或更換沙隔。
6. 放回沙隔後，重新接駁上主供水組件。
7. 慢慢打開主供水閘制。確保沒有洩漏。
8. 慢慢開關相應的溫水龍頭數次直至熱水器內的空氣完全排出。
9. 控制面板電線連接至外殼上的控制面板，將外殼裝回熱水器，並收緊外殼螺絲。

注意：請勿擠壓控制面板電線。

然後再接通電源（例如打開保險絲）。

NOTE

保用條款

此保用提供德國寶產品之機件在正常使用下壹年保用(自購買日起計算)。

* 貴戶須在購機十天內，以下列其中一種方式向本公司登記資料，保用手續方正式生效：

1) 填妥本公司網頁內之保用登記表格
www.germanpool.com/warranty

2) 填妥保用登記卡，郵寄至本公司。

1. 未能出示購買發票正本者，將不獲免費維修服務。
2. 用戶應依照說明書的指示操作。本保用並不包括：
   - 上門安裝、檢驗、維修或更換零件之人工以及一切運輸費用；
   - 因天然與人為意外造成的損壞 (包括運輸及其他)；
   - 電源接合不當、不依說明書而錯誤或疏忽使用本機所引致之損壞。
3. 於下列情況下，用戶之保用資格將被取消：
   - 購買發票有任何非認可之刪改；
   - 產品被用作商業或工業用途；
   - 產品經非認可之技術人員改裝或加裝任何配件；
   - 機身編號被擅自塗改、破壞或刪除。
4. 總代理有權選擇維修或更換配件或其損壞部份。
5. 產品一經被轉讓，其保用即被視作無效。

客戶服務及維修中心

香港

九龍大業街59號
三湘九龍灣貨運中心地下B室
電話：+852 2333 6249
傳真：+852 2356 9798
電郵：repairs@germanpool.com

澳門

澳門俾利喇街145號
寶豐工業大廈3樓
電話：+853 2875 2699
傳真：+853 2875 2661

Warranty Terms & Conditions

Under normal operations, the product will gurantee a 1-year full warranty provided by German Pool (effective from the date of purchase).

* This warranty is not valid until customer registration information is received by our Service Centre within 10 days of purchase via one of the following means:

1) Visit our website and register online:
www.germanpool.com/warranty

2) Complete all the fields on the attached Warranty Card and mail it back to our Customer Service Centre.

另請填妥以下表格並與正本發票一併保存，以便維修時核對資料。用戶提供之所有資料必須正確無誤，否則免費保用將會無效。
Please fill out the form below. This information and the original purchase invoice will be required for any repairs. Warranty will be invalidated if information provided is found to be inaccurate.

型號 Model No. : **DCN/DCN13**

機身號碼 Serial No. : _____ 發票號碼 Invoice No. : _____

購買商號 Purchased From : _____ 購買日期 Purchase Date : _____

1. Customer who fails to present original purchase invoice will not be eligible for free warranty service.
2. Customer should always follow the operating instructions. This warranty does not apply to:
   - labour costs for on-site installation, check-up, repair, replacement of parts and other transportation costs;
   - damages caused by accidents of any kind (including material transfer and others);
   - operating failures resulting from applying incorrect voltage, improper usage, and unauthorized installations or repairs.
3. This warranty is invalid if:
   - the purchase invoice is modified by an unauthorized party;
   - the product is used for any commercial or industrial purposes;
   - the product is repaired or modified by unauthorized personnel, or unauthorized parts are installed;
   - the serial number is modified, damaged or removed from the product.
4. German Pool will, at its discretion, repair or replace any defective part.
5. This warranty will be void if there is any transfer of ownership from the original purchaser.

Customer Service & Repair Centre

Hong Kong

Unit B, G/F, Sunshine Kowloon Bay
Cargo Centre, 59 Tai Yip Street.
Kowloon, Hong Kong
Tel : +852 2333 6249
Fax : +852 2356 9798
Email : repairs@germanpool.com

Macau

3/F, Edificio Industrial Pou Fung,
145 Rua de Francisco Xavier Pereira,
Macau
Tel : +853 2875 2699
Fax : +853 2875 2661

此保用只適用於香港及澳門 | This warranty is valid only in Hong Kong and Macau

產品規格及設計如有變更，恕不另行通知。中英文版本如有出入，一概以英文版為準。本產品使用說明書以 www.germanpool.com 網上版為最新版本。
Specifications are subject to change without prior notice. If there is any inconsistency or ambiguity between the English version and the Chinese version, the English version shall prevail. Refer to www.germanpool.com for the most up-to-date version of the manual.

GERMAN
POOL

All information in this manual is for reference only, and subject to change without prior notice.
所有資料僅供參考。如有變更，恕不另行通知。
EN-ZHTC 9120-25716 05.21

German Pool (Hong Kong) Limited

Hong Kong
Room 113. Newport Centre Phase II. 116 Ma Tau Kok Road. Tokwawan. Kowloon. Hong Kong.
Tel: +852 2773 2888
Fax: +852 2765 8215

China
8th, Xinxiang Road, Wusha Industrial Park, Daliang, Shunde, Foshan, Guangdong
Tel: +86 757 2219 6888
Fax: +86 757 2219 6809

Macau
3/F, Edificio Industrial Pou Fung,
145 Rua de Francisco Xavier Pereira, Macau
Tel: +853 2875 2699
Fax: +853 2875 2661

香港《S MARK》安全認證 2005
中國櫥櫃/家電行業十大影響力品牌 2008
CEO非凡品牌大賞 2007
香港星級品牌企業獎 2015
香港工商業獎 2008
最具潛質創建品牌企業獎 2007
香港中小企業最佳拍檔大獎 2015
香港消費者推崇品牌 2014
香港《Q嘜》優質服務證書 2015
香港名牌十年成就獎 HONG KONG TOP BRAND TEN YEAR ACHIEVEMENT AWARD 2015

© All rights reserved. Copying, reproducing or using the contents of this manual is not allowed without prior authorization from German Pool, violators will be prosecuted.

www.germanpool.com

WH-DCN-M-21(3)