INSTRUCTION MANUAL

NT935

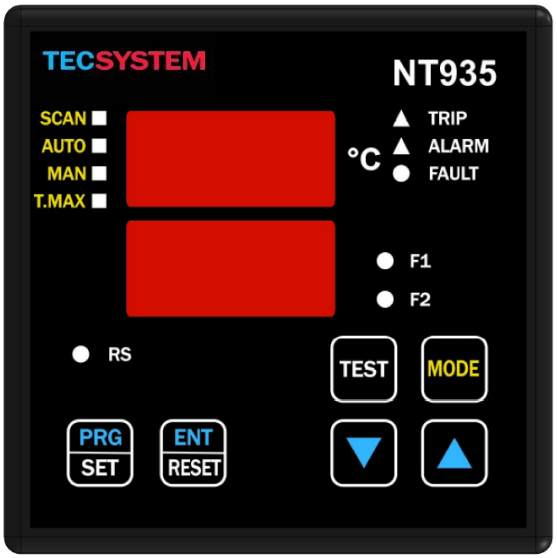

1MN0102 REV. 0

TECSYSTEM
temperature protection relays & ventilation

lead-free

RoHS

operates with ISO9001 certified quality system

TECSYSTEM Shanghai Co.,Ltd
3rd Floor, Block No.5, No.33,Fuhua Road, Jiading District, Shanghai – China
Tel.: +86 21 39905855/56/57
Fax: +86 21 39905859

http://www.tecsystem.asia

R. 1.7 28/09/17

ENGLISH

INTRODUCTION

First of all we wish to thank you for choosing to use a **TECSYSTEM** product and recommend you read this instruction manual carefully: You will understand the use of the equipment and therefore be able to take advantage of all its functions.

ATTENTION! THIS MANUAL IS VALID AND COMPLETE FOR THE NT935 BASIC AND NT935 AD CONTROL UNITS

CONTENTS

	PAGE
1) SAFETY REQUIREMENTS	4
2) ACCESSORIES	5
3) TECHNICAL SPECIFICATIONS	6
4) FRONT PANEL	8
• DISPLAY	9
• OPERATING PROGRAM CONTROL	—
• NOTES ON SCAN AND MAN FUNCTIONS	—
• LED TEST	—
• ALARM RELAY TEST	—
• ALARM RELAY SILENCING	—
5) MOUNTING	10
6) ELECTRICAL CONNECTIONS NT935 BASIC	11
• NT935 AD BACK	12
• POWER SUPPLY	13
• ALARMS AND VENTILATION	—
• FAULT AND RESET MESSAGE SEQUENCE	—
7) PROGRAMMING	14
• NT935	—
• PROGRAMMING NOTES	16
• TEMPERATURE SENSORS	—
• MEASUREMENT SIGNAL TRANSFER	—
• TEMPERATURE SENSOR DIAGNOSTICS	17
• VOTING FUNCTION	—
• PROGRAMMED DATA DIAGNOSTICS	—
• TEMPERATURE DIAGNOSTICS	—
• COOLING FAN CONTROL	18
• FAN TEST	—
• INTELLIFAN FUNCTION	—

PAGE

8) RS485 MODBUS 19

- INTRODUCTION TO THE MODBUS INSIDE MODULE ..... —
- OPERATING NOTES ..... —
- DATA TRANSMISSION ON MODBUS NETWORK ..... —
- RS485 ELECTRICAL CONNECTIONS ..... —
- DATA FRAME ..... —
- DATA PACKET ..... —
- FUNCTION CODE 20
- CODE 3(10). ..... —
- CODE 16(10). ..... —
- NOTES FOR REMOTE PROGRAMMING ..... —
- ERROR CODES 21
- UNACCEPTABLE DATA ..... —
- ILLEGAL DATA ..... —
- POLLING FREQUENCY ..... —
- MODBUS MAPPING TABLE 22

9) OUTPUT 4.20mA 27

10) TECHNICAL SPECIFICATIONS OF THE EXTENSION CABLE FOR Pt100 ..... —

11) FCD FUNCTION 28

12) WARRANTY CONDITIONS ..... —

13) TROUBLESHOOTING 29

14) EQUIPMENT DISPOSAL ..... —

15) USEFUL CONTACTS ..... —

16) UL SPECIFICATION AND RATINGS 30

SAFETY REQUIREMENTS



ATTENTION :

Carefully read the manual before starting using the control unit. Keep the instructions for future reference.



Do not open the device, touching any internal component can result in electric shock as voltages over 50 volts can be lethal. In order to reduce the risk of electric shock, do not disassemble the back of the device. Warranty shall be void if device is opened.

Before connecting the device to the power supply, ensure that all the connections are correct. Always disconnect the unit from the supply before making any modification on the wiring.



Any operation on the equipment must be operated by a qualified technician.

Failure to comply with these instructions can cause damages, fires or electric shock, and possible serious injuries!

POWER SUPPLY
The NT935 series control unit has UNIVERSAL power supply, i.e. it can be supplied at 24 to 240 Vac-Vdc, irrespectively of polarity in Vdc. Before use, ensure that the power cable is not damaged, knotted or pinched. Do not tamper with the power cable. Never disconnect the unit by pulling the cable, avoid touching the clamps. Do not carry out any connecting/disconnecting operation with wet hands. To disconnect the device, do not use objects such as levers. Immediately disconnect the device if you smell burning or see any smoke: contact technical service.

LIQUIDS
Do not expose the equipment to liquid spurts or drops, do not position it in places where humidity exceeds 90% and never touch it with wet or humid hands during storms. If any liquid penetrates the control unit, disconnect immediately and contact technical service.

CLEANING
Disconnect the power cable before cleaning the control unit, using a dry cloth without any solvent or detergent, and compressed air.

OBJECTS
Never insert objects into the openings of the control unit. If this happens, disconnect the control unit and contact technical service.

USE RESERVED TO QUALIFIED PERSONNEL
The purchased good is an advanced electronic device that should not be used by non-qualified personnel. Any operation must be carried out by a qualified technician.

ACCESSORIES
The use of non-original accessories or spare parts may damage the unit and endanger users' safety. In event of fault, contact technical service.

LOCATION
Install the control unit indoor, in a place protected from water splashes and sun rays. Do not place near heat sources if exceeding the parameters stated in this manual. Position on a stable surface, far from any possible vibrations. Position the unit as far as possible from intense magnetic fields..

REPAIRS
Do not open the control unit. In case of fault, always contact qualified personnel. The opening of the control unit and/or the removal of the series identifying label automatically make the warranty void. The warranty seal is applied to all devices, any attempt to open the unit would cause the seal to break the consequent automatic cancellation of the warranty.

FUNCTION
To control the transformer correctly from a temperature point of view, enabling the VOTING function is allowed where the load distributed between the phases of the transformer is adequately balanced.

TECHNICAL INFORMATION

Mail: ufficiotecnico@tecsystem.it — tel: 02/4581861

ACCESSORIES

Tthe following object are present inside the box :

Control unit



INSTRUCTION MANUAL (CD)



2 blocks for panel mounting

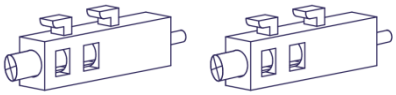

1 supply terminal 3 poles pitch 5
Code: 2PL0367 - Screws tightening torque 0.5Nm



1 relay terminal 12 poles pitch 5
Code: 2PL0361- Screws tightening torque 0.5Nm

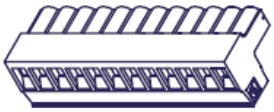

1 Pt100 sensor terminal 12 poles pitch 3.81
Code: 2PL0420 - Screws tightening torque 0.25Nm

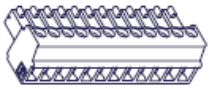

1 terminal 2 poles pitch 5 for 4.20mA output (*)
Code: 2PL0364 or 2PL0363
Screws tightening torque 0.5Nm



1 RS485 terminal 3 poles pitch 3.81 (*)
Code: 2PL0366 - Screws tightening torque 0.25Nm



(*) only for NT935 AD version

ATTENTION: always install the device using the terminals included in the pack.
The use of terminals other than those included with the control unit might cause malfunctions.

TECHNICAL SPECIFICATIONS	NT935 BASIC	NT935 AD
POWER SUPPLY		
Supply rated values	24-240 Vac-Vdc 50/60HZ	24-240 Vac-Vdc 50/60HZ
Maximum and minimum supply values	20-270 Vac-Vdc 50/60HZ	20-270 Vac-Vdc 50/60HZ
Vdc with reversible polarities	•	•
INPUTS		
4 inputs for RTD sensors, Pt100 type with 3 wires (max section 1.5mm²)	•	•
Connections on removable terminal strips	•	•
Input channels protected against electromagnetic interference	•	•
Cable compensation for thermistors	500 m (1 mm²)	500 m (1 mm²)
OUTPUTS		
2 alarm relays (ALARM AND TRIP) SPDT	•	•
1 sensor or operating failure (FAULT) relay SPST	•	•
Output relays with 10A-250Vac-res COSΦ=1 contacts.	•	•
2 ventilation management relays SPST FAN 1 AND FAN 2	•	•
Modbus RTU RS485 output	NO	•
Optically isolated 4.20 mA output	NO	•
DIMENSIONS		
100x100 mm– din43700-depth 131mm (terminal block included)	Hole 92 x 92 mm	Hole 92 x 92 mm
TESTS AND PERFORMANCE		
Construction in compliance with CE regulations	•	•
Protection from electrical interference EN 61000-4-4	•	•
Dielectric strength 1500 Vac for a min. between output relays and sensors, relays and power supply, power supply and sensors	•	•
Accuracy ±1% full scale value, ±1 digit	•	•
Ambient operating temperature from –20°C to +60°C	•	•
Humidity 90% non-condensing	•	•
Frontal film polycarbonate IP65	•	•

TECHNICAL SPECIFICATIONS	NT935 BASIC	NT935 AD
Housing NORYL 94 _V0	•	•
Absorption 7,5VA	•	•
Data memory 10 years minimum	•	•
Digital linearity of sensor signal	•	•
Self-diagnostic circuit	•	•
Protection treatment of the electronic part	Option	Option
DISPLAY AND DATA MANAGEMENT		
2x13mm displays with 3 digits to display temperatures, messages and channels	•	•
3 LEDs to display the state of the alarms of the selected channel (ALARM-TRIP-FAULT)	•	•
2 LEDs to display the state of FAN1 and FAN2	•	•
Temperature control from 0°C to 240°C (*)	•	•
2 alarm thresholds for channels 1-2-3	•	•
2 alarm thresholds for channel 4	•	•
2 ON-OFF thresholds for FAN 1 and FAN 2	•	•
Sensor diagnostics (Fcc-Foc-Fcd)	•	•
Data memory diagnostics (Ech)	•	•
Access to programming through front keyboard	•	•
Automatic exit from relay programming, display and test after 1 minute's inactivity	•	•
Incorrect programming warning	•	•
Selection between channel automatic scanning, hottest channel or manual scanning	•	•
Storage of maximum temperatures reached by channels and alarm status	•	•
Front key to reset the alarms	•	•
Voting function	•	•
Intellifan function	•	•

(*)On demand, available version from -40°C to 200°C with alarm temperature management range from 0°C to 200°C

FRONT PANEL

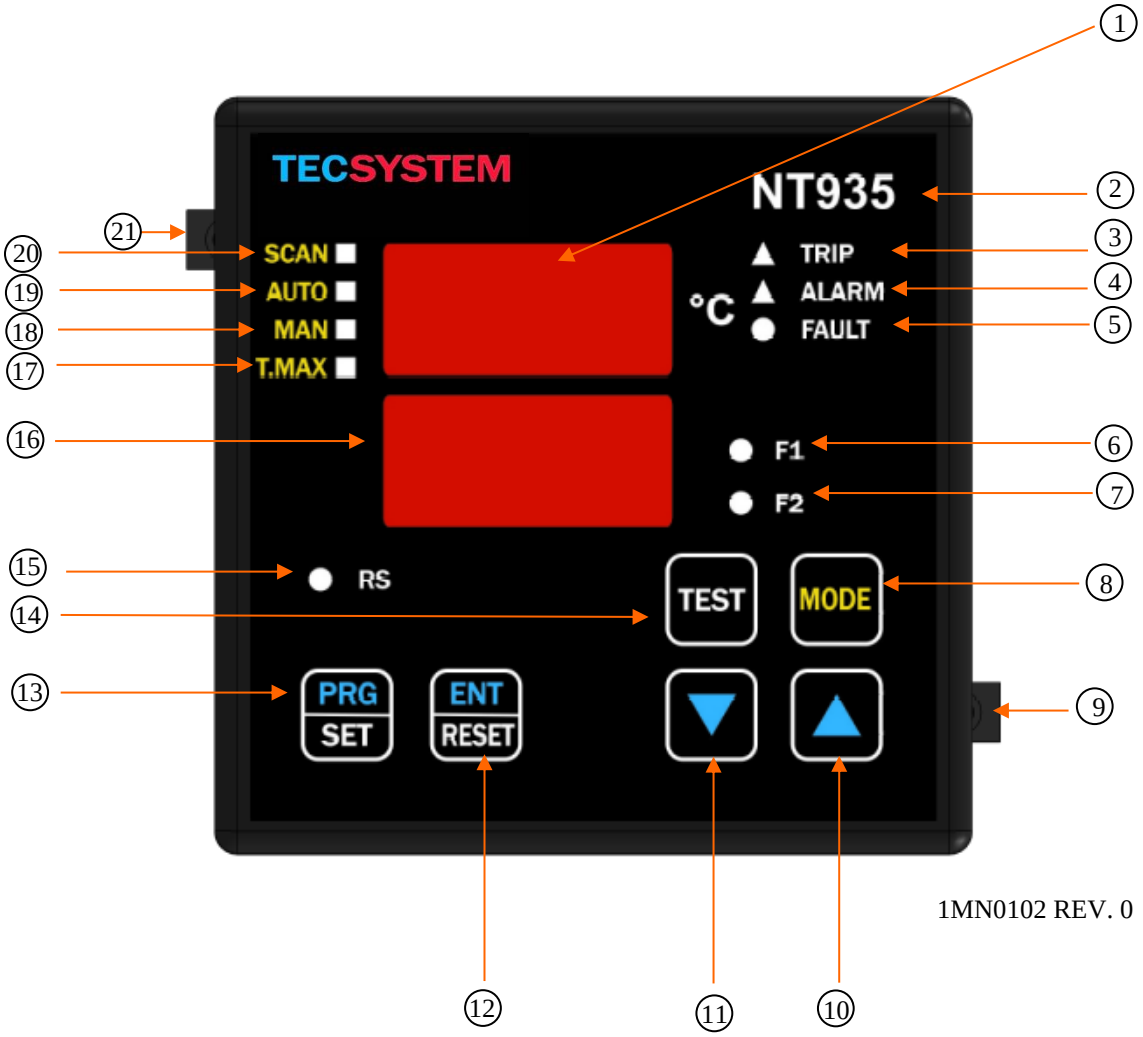

1MN0102 REV. 0

1)	3-digit temperature display	12)	Enter/Reset button
2)	Control unit series	13)	Programming / Setting key
3)	TRIP (red) LED	14)	LED/relay test key
4)	ALARM (yellow) LED	15)	Modbus RS communication (green) LED (only AD)
5)	FAULT (red) LED	16)	3-digit channel display
6)	FAN 1 (yellow) LED	17)	T-max mode selection (red) LED
7)	FAN 2 (yellow) LED	18)	Man mode selection (yellow) LED
8)	Display mode selection key	19)	Auto mode selection (green) LED
9)	Fixing block	20)	Scan mode selection (yellow) LED
10)	UP key	21)	Fixing block
11)	DOWN key		

DISPLAY

The first display is dedicated to temperatures

The second display to the monitored channel.

When switching the device ON or following a reset, the display shows the NT935 control unit model : BAS (no option) or AD, VER "00" (firmware version) and temperature range.

Pressing the MODE key, the display modes can be set:

- *SCAN*: the monitoring unit displays all the activated (°C) and deactivated (NO) channels scanning every 2 seconds.
- *AUTO*: the monitoring unit displays the hottest channel automatically.
- *MAN*: manual reading of the channel temperature using the up/down ▲▼.
- *T.MAX*: the monitoring unit displays the highest temperature reached by the sensors and any situation of: alarm or fault occurred after the last reset. Select channels with cursors ▲▼, reset values with RESET.

OPERATING PROGRAM CONTROL

To control the protection levels programmed, press the PRG key twice to access the **VIS** display mode. By repeatedly pressing the PRG key, you can scroll through all the previously loaded values in sequence.
After 1 minute's keyboard inactivity, the programming display procedure is automatically abandoned.

To stop the display, press the ENT key.

NOTES ON SCAN AND MAN FUNCTIONS

During the SCAN and MAN modes, the operation of the NT935 can be displayed.

1) RUN cPU:
This message appears when the unit operates regularly without any system error.
2) Ech Err:
This message appears when a damage in the EEPROM memory is detected.
Pressing Reset will cancel the message and restore the original default parameters, listed in the programming paragraph on pages 14-15. Return the control unit to TECSYSTEM for repair.
3) CAL Err:
This message appears when damage is found in the measurement circuit.
The temperature values displayed might be incorrect. Return the control unit to TECSYSTEM for repair.
4) Pt Err :
This message appears when it is detected that one or more PT100 sensors are not working correctly, FOC, FCC and FCD indications in the temperature sensor diagnostics paragraph on page 17. In case of **Err** the FAULT relay will be de-energised.

The above messages will be displayed following the 1-2-3-4 priority stated.

NOTE: regardless of the display mode, in case of a sensor fault (fcc, foc or fcd), the control unit will automatically switch to **SCAN (PRIVILEGED SCAN)** mode, immediately allowing you to see the fault on the relative channel **CH**. (**Mode** key is disabled).

LED TEST

We suggest carrying out the control unit LED test regularly.
For this operation, press the TEST key briefly; all the displays turn on for 2 seconds.
If one of the LEDs does not work, please return the control unit to TECSYSTEM for repair.

ALARM RELAY TEST

This function allows you to carry out a test of the relay operation without having to use further devices. To start the test procedure, keep the TEST button pressed for about 5 seconds: TST appears for 2 seconds, confirming you have entered the Relay Test mode.
The LED that is lit shows the relay to be tested; use the cursors ▲▼to select the desired relay.
Press the SET and RESET keys to energise and de-energise the relay to be tested; the display will show ON-OFF.
After 1 minute's keyboard inactivity, the RELAY TEST procedure will be automatically abandoned.
To stop the RELAY TEST procedure, press the TEST key.
Alternatively, you can use the PT100 simulator model: SIM PT100.

ALARM RELAY SILENCING

If you want to silence the ALARM signal press the RESET key: the relay de-energises and the ALARM LED, which was fixed, will start flashing. Silencing is automatically disabled when the temperature goes below the ALARM threshold.

MOUNTING

Drill a 92 x 92 mm hole in the panel sheet.

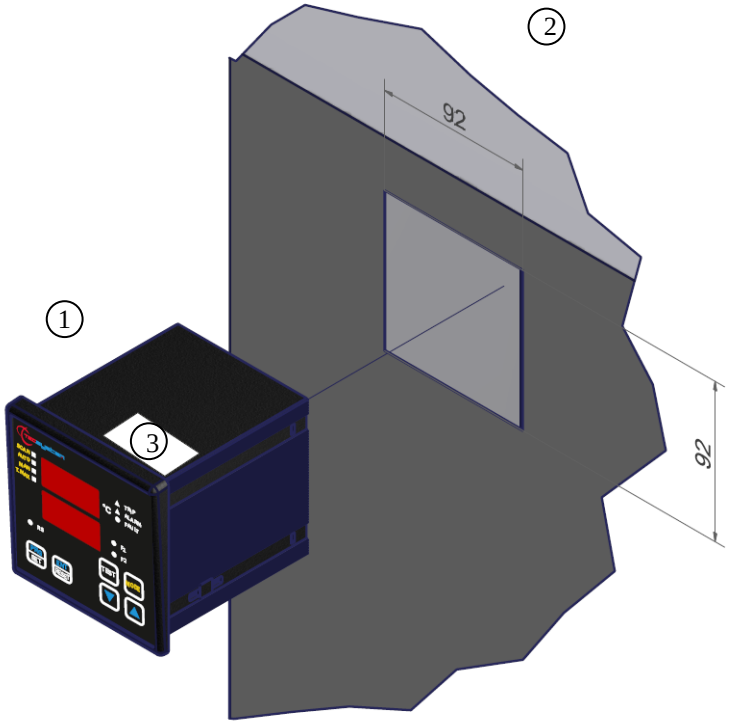

1MN0007 REV. 0

1)	Control unit	2)	Panel hole dimensions (+0.8mm tolerance)
3)	Identification label		

Fix the unit securely with the blocks supplied.

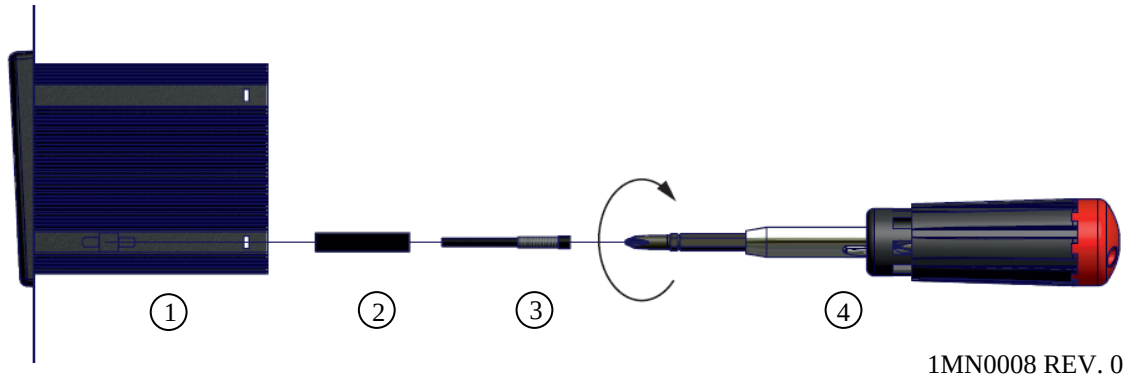

1MN0008 REV. 0

1)	Control unit	3)	Fixing screw
2)	Fixing block	4)	Crosshead screwdriver #1X100mm

ELECTRICAL CONNECTIONS

NT935 BASIC

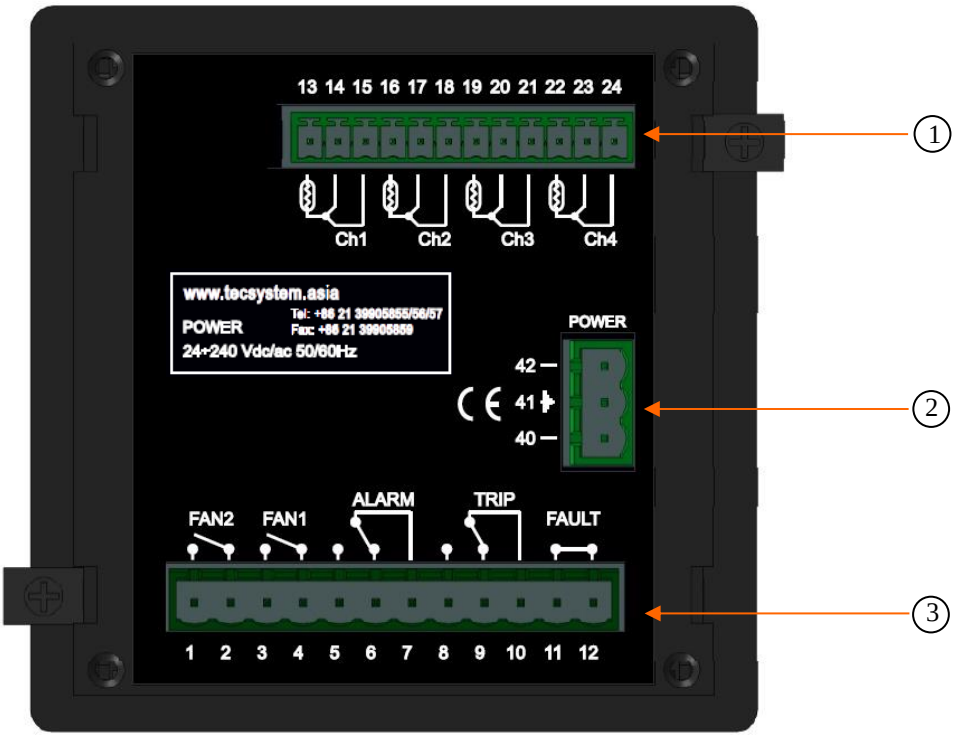

1)	Pt100 sensors (white-red-red)	3)	Relays (FAN2-FAN1-ALARM-TRIP-FAULT)
2)	Supply 24-240Vac-dc 50/60Hz.		

Note: relay contact image in non-alarm condition, with the exception of the FAULT relay that opens: contacts 11-12 open (NO) contacts 11-12 closed (NC) fault condition identification. Read the Alarms and Ventilation paragraph on page 13

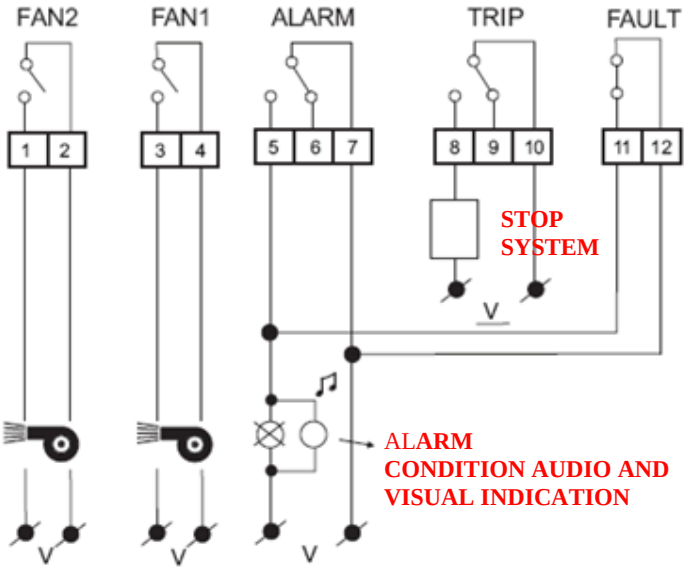

Pt100 CONNECTION EXAMPLE

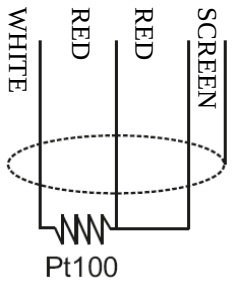

Note: before connecting the sensors to the control unit, read the Measurement signal transfer paragraph on page 16.

Output relay with 10A-250Vac-res COSΦ=1 contacts.

1MN0095 REV. 0

ELECTRICAL CONNECTIONS

NT935 AD

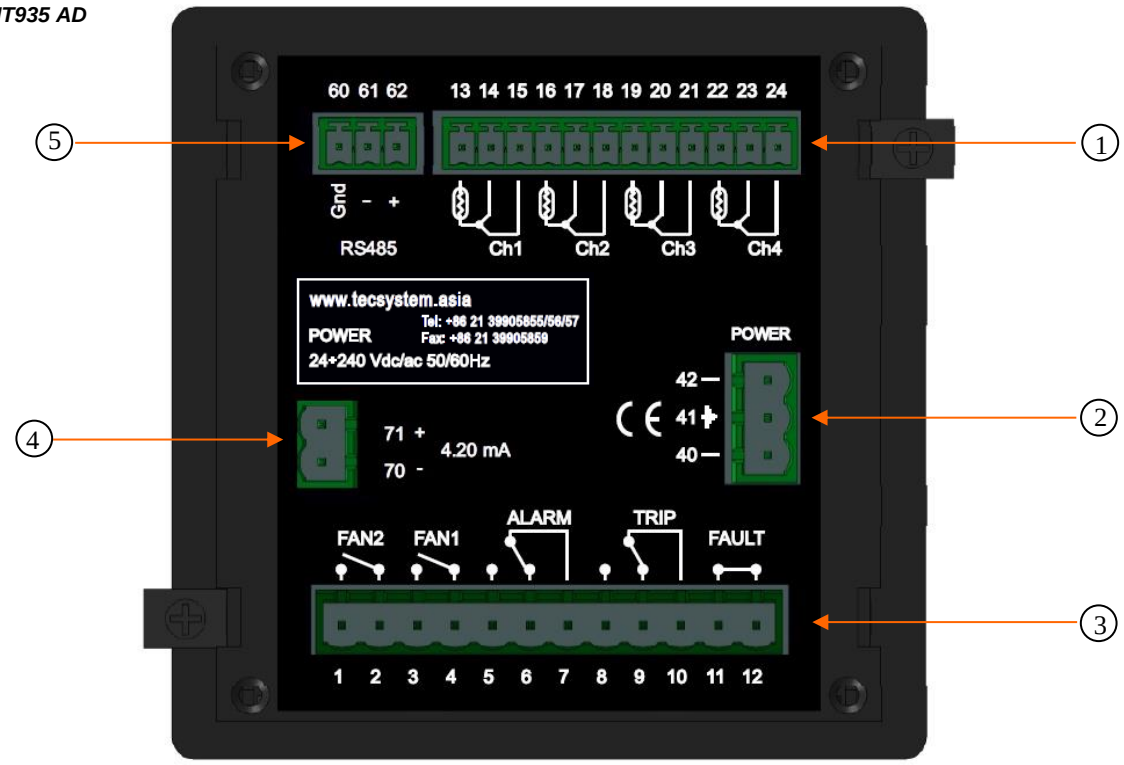

1)	Pt100 sensors (white-red-red)	3)	Relays (FAN2-FAN1-ALARM-TRIP-FAULT)
2)	Supply 24-240Vac-dc 50/60Hz.	4)	Output 4.20 mA
5)	Modbus RTU RS485 output		

Note: relay contact image in non-alarm condition, with the exception of the FAULT relay that opens: contacts 11-12 open (NO) contacts 11-12 closed (NC) fault condition identification. Read the Alarms and Ventilation paragraph on page 13 and see the opening of the fault contact.

RELAY CONNECTION EXAMPLE

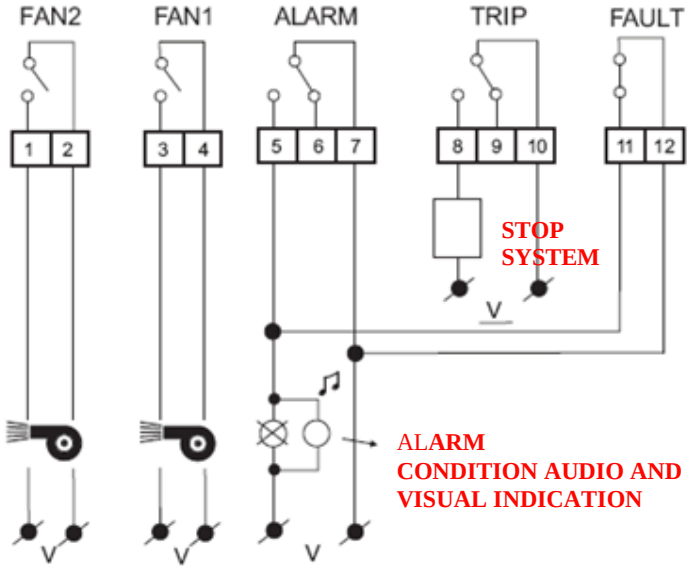

Output relay with 10A-250Vac-res COSΦ=1 contacts.

Pt100 CONNECTION EXAMPLE

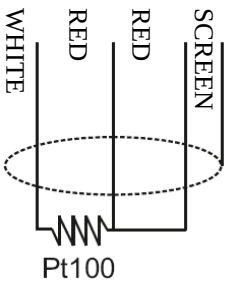

Note: before connecting the sensors to the control unit, read the Measurement signal transfer paragraph on page 15.

1MN0095 REV. 0

POWER SUPPLY

The NT935 control unit has UNIVERSAL power supply, i.e. it can be supplied by 24 to 240 Vac-Vdc, 50/60Hz irrespectively of polarity in Vdc (terminals 40-42).

This is obtained thanks to the use of a tested power supply unit, newly designed and manufactured, that frees installers from worrying about the correct Vac and Vdc supply.

The ground must always be connected to terminal 41.

When the unit is supplied directly by the secondary of the transformer to protect, it can be burnt out by strong overvoltages.
This happens if the main switch is closed and the transformer has no load (blank test).
The above-mentioned problems are much more evident when the 220 Vac voltage is taken directly from the transforme secondary bars and there is a fixed capacitor battery to phase the transformer itself.

To protect the control unit from line overvoltages, we suggest using the PT-73- 220 electronic discharger, designed by TECSYSTEM Shanghai for this specific purpose. As an alternative we suggest using 110 Vac or, even better, 110 Vdc supply voltages.

If an existing control unit must be replaced with a new one, to guarantee its correct and safe operation, the sensor/relay/supply connecting terminals must be replaced with the new terminals supplied.

ALARMS AND VENTILATION

Carry out the electrical connections on the removable terminal blocks only after disconnecting them from the unit.
When the control unit is in one of the modes mentioned below, it does not monitor the temperature and the relays are all blocked. The fault contact switches and the fault LED flashes.

- Vis. programming display
- PRG programming
- Relay test

The ALARM and TRIP relays switch only when the set temperature thresholds are exceeded.

The FAULT contact opens (11-12) when the equipment is supplied only if the unit detects no fault on switching on, and stays in this condition until one of the following events occurs:

- Data memory fault (Ech message).
- Pt100 sensor fault (FCC short-circuited sensor, FOC interrupted sensor or Fcd quick temperature increase)
- CAL damage to the measurement circuit.
- Insufficient supply voltage.
- During the power on reset after programming (PRG), displaying the data (VIS) and test relay.

FAULT CONTACT OPERATION

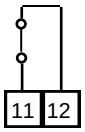

FAULT 11-12 NC: ALARM FAULT OR POWER OFF

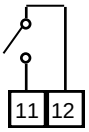

FAULT 11-12 NO: POWER ON OR NO FAULT

The FAN1 and FAN2 contacts can be used to control the cooling fans, or they can be inserted in the conditioning system of the transformer room, see paragraph Fan control on page 17.

NOTE: always disconnect the unit before performing any electrical connections.

FAULT AND RESET MESSAGE SEQUENCE

Find below the sequence of fault messages and RESET function condition.

1) ECH	eeprom fault	erasable message
2) CAL	measurement circuit fault	erasable message
3) FCD	quick temp. increase fault	resettable condition
4) ERR PT	FCC or FOC sensor fault	non-resettable condition

PROGRAMMING

NT935 BASIC/AD

STEP	PRESS	EFFECT	PRESS	NOTES
1	PRG SET	Keep the PRG key pressed until the display shows PRG		PRG
2	PRG SET	Press PRG to confirm entering programming mode		
3		The ALARM threshold for (CH 1-2-3) is displayed Set the desired threshold, the Alarm LED flashes.	▼ ▲	Default 90°C
4	PRG SET	The TRIP threshold for (CH 1-2-3) is displayed and the Trip LED flashes.		
5		Set the desired threshold	▼ ▲	Default 119°C
6	PRG SET	FAN1 (CH 1-2-3) is displayed and the Fan1 LED flashes.		Default YES
7		Select YES / NO / INT	▼ ▲	If you select INT, read the function notes on page 18
8	PRG SET	(CH4) is displayed CH4 enabling		
9		Set YES or NO	▼ ▲	with YES CH4 is enabled with NO CH4 is disabled
10	PRG SET	The ALARM threshold for (CH4) is displayed, the Alarm LED flashes.		If CH4=NO go to step 16, Default NO
11		Set the desired threshold	▼ ▲	Default 120°C
12	PRG SET	The TRIP threshold for (CH4) is displayed, the Trip LED flashes.		
13		Set the desired threshold	▼ ▲	Default 140°C
14	PRG SET	FAN2 for (CH4) is displayed		Default Yes
15		Select YES or NO	▼ ▲	
16	PRG SET	ON (CH 1-2-3) is displayed and the FAN1 LED flashes.		Default 70°C
17		Set the desired FAN1 ON threshold	▼ ▲	If you select FAN1 NO, go to step 21 if you select INT the FAN1 and FAN2 LEDs flash.
18	PRG SET	OFF (CH 1-2-3) is displayed, the FAN1 LED flashes		Default 60°C
19		Set the desired FAN1 OFF threshold	▼ ▲	

20	PRG SET	ON (CH4) is displayed, the FAN2 LED flashes		Default 45°C
21		Set the desired FAN2 ON threshold		If you select FAN2 NO, go to step 24
22	PRG SET	OFF (CH 4) is displayed, the FAN2 LED flashes		Default 35°C
23		Set the desired FAN2 OFF threshold		
24	PRG SET	HFN (NO) is displayed The FAN1-FAN2 LEDs flash		Fan cyclic test for 5 min. every “n” hours
25		Set the desired number of hours		Default NO = function disabled
26	PRG SET	FCD (NO) is displayed		Fault for quick temperature increase (°C/sec)
27		Set the desired value (See FCD info on page 28)		Default NO (function excluded)
28	PRG SET	VOT (NO) is displayed (See VOTING on page 17)		
29		Set YES or NO		Default NO (function excluded)
		For NT935 (BAS) version jumps to step 38		
30	PRG SET	ADR <> "datum" is displayed		Modbus address Default 001
31		Set the address		From 1 to 255
32	PRG SET	BDR <> "datum" is displayed		Modbus transmission speed Default 19.2 Kb/s
33		Set the desired speed		From 2.4 Kb/s to 38.4 Kb/s
34	PRG SET	PAR <> "datum" is displayed		Parity bit selection Default EVE
35		Set the desired parity bit		None (No), Even (EVE), Odd (ODD)
36	PRG SET	420 <> "datum" is displayed		4.20 mA output programming
37		Select the 4.20 mA output desired		1-2-3-4; fixed channel SCA: scanning HOT: the hottest channel Default HOT
38	PRG SET	END is displayed		End of programming
39	ENT RESET	Press ENT to save the set data and exit programming		Err: incorrect programming of the LED values (note 6)
40	PRG SET	Return to step 1		See programming notes on page 16

ATTENTION :

We recommend you check the unit's programming before starting the device.

The default parameters set by TECSYSTEM might not match your requirements.

Programming the device is the end user's responsibility, the settings of the alarm thresholds and the enabling of the functions described in this manual must be checked (by a specialized engineer) according to the application and features of the system the control unit is installed on.

PROGRAMMING NOTES

1) The MODE key allows reversing the programming steps according to the sequence 28-26-8-1.
2) The TEST key allows exiting programming without saving the modified data.
3) After 1 minute's keyboard inactivity programming is abandoned without saving the data.
4) During programming the control unit does not control/protect the monitored machine.
5) At the end of programming the control unit is restarted and the FAULT relay is disabled until the unit is fully restarted.
6) If pressing ENT, "Err" appears, it means that one of the following mistakes has been made:

ERR ALL. = ALARM ≥ TRIP
ERR FAN = FAN-OFF ≥ FAN-ON. (FAN1 OR FAN2)
ERR INT = INT FAN-OFF ≥ FAN-ON (FAN1) DELTA <10°C

Press PRG to return to step 1 and correct the data.

NOTE: EVERY TIME THE CONTROL UNIT IS PROGRAMMED WITH DATA SAVING CONFIRMATION, THE VALUES STORED IN T-MAX ARE RESET TO THE TIME OF SAVING.

TEMPERATURE SENSORS

Each Pt100 thermometric sensor has one white and two red connectors (CEI 75.8 regulations).
The CH2 channel must be always referred to the central column of the transformer.
The CH4 channel must be always referred either to the core of the transformer or to the Pt100 ambient sensor if you wish to thermo-regulate the transformer room using the NT935 control unit.

MEASUREMENT SIGNAL TRANSFER

All the cables transferring the Pt100 measurement signals must comply with the following under all circumstances:

1. Every Pt100 must be connected with a three-wire cable having a minimum section of 0.35mm² and a maximum of 1 mm².
2. The extension cable must be screened with tinned copper braid with an 80% cover
3. Conductors must be twisted, maximum recommended step 60mm
4. The cable screening must be grounded only with a termination, preferably on the unit side.
5. The sensors' signal transfer cable must not be near electrical cables, either low or medium-high voltage.
6. The Pt100 cable and the signal transfer cable must be laid in a straight line, without any winding.
7. Any caps used to butt conductors must be crimped properly to avoid false contacts.

NOTE: to install the sensors and signal transferring cable correctly, read the SCS/SENSOR installation rules manual.

What may happen when installation rules are not complied with.

The electrical field propagating from the power line of another circuit, couples capacitively with the conductors (in particular with unscreened cables). The effect of this coupling creates a signal that overlaps the signal transmitted by the nearby conductors, causing incorrect readings.

2) The variations in magnetic flux in the power lines may induce an electromotive force on the signal transferring cables (in particular non-twisted cables), that, being a closed circuit, generates a current. This interference current, multiplied by the circuit resistance, gives a voltage value that overlaps the signal to be transmitted, distorting the sensor measurement.

3) False contacts can alter the signal with the consequent variation in the temperature detected.

In specific cases, when the rules for connecting the Pt100 sensors are not complied with, the following anomalies can occur between the SCS box and the temperature control unit:

a) incorrect temperature readings, alarms or anomalous tripping
b) mechanical / electrical fault of the Pt100 sensors
c) damage to the Pt100 inputs of the control unit.

TECSYSTEM Shanghai has designed its own special cable to transfer the measurement signals, CEI-compliant, with all the protection requirements provided for: model **CT-ES**

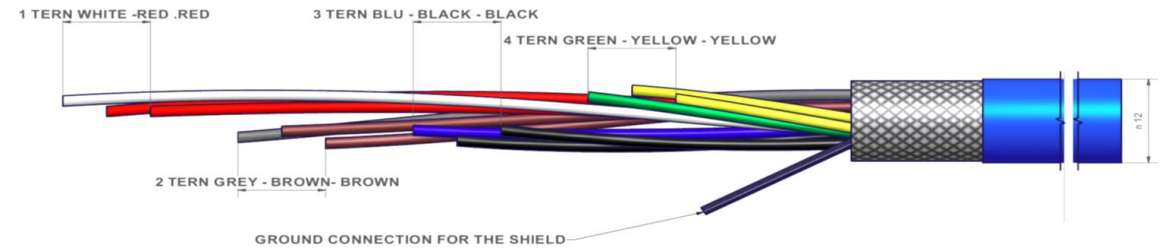

NOTE: *the use of cables not complying with the above might cause reading anomalies. It is always important to take into account that any interference on the signal lines might cause anomalies on the Pt100 inputs (CH1-CH2-CH3-CH4...) or on the sensors themselves.*

All "NT" series control units have linearity of the sensor signal, with a maximum error of 1% of full scale value.

TEMPERATURE SENSOR DIAGNOSTICS

In case of failure or exceeded full scale value of one of the thermometric sensors installed on the machine to protect, the FAULT relay opens immediately with the relative warning of faulty sensor on the corresponding channel (PT err).

Fcc indicates sensor short-circuited or minimum full scale value of the control unit exceeded -8°C (version 0°÷240°C) and -48°C (version -40°C÷200°C)

Foc indicates sensor interrupted or maximum full scale value of the control unit exceeded 243°C (version 0°÷240°C) and 203°C (version -40°C÷200°C)

To eliminate the message and reset the opening of the Fault contact, it is necessary to check the Pt100 connections and replace the faulty sensor (if any). If the minimum/maximum full scale value has been reached, check that the ambient conditions match the control unit reading.

Note: exceeding the minimum/maximum full scale value can also be caused by interference on the sensor lines; in this case we recommend that you check:

the correct installation of the sensors and above all of the extension cable (as stated in the paragraph MEASUREMENT SIGNAL TRANSFER)
the activation of: VOTING (see below) or FCD (see page 28) must always be operated taking into account the system working conditions.

CAL message display: it appears when damage is found in the measurement circuit. The temperature values displayed might be incorrect. Return the control unit to TECSYSTEM for repairs.

VOTING FUNCTION

The voting function derives from the redundancy concept that consists in duplicating the components of a system to increase their **reliability**.

How does VOTING work?
Using the redundancy principle, we use the sensors installed on the three phases U-V-W to monitor the transformer's operation, and at the same time ascertain the sensors are working correctly, discriminating against any false alarms (generated by installation errors).

By activating the **VOTING "YES"** function, the control unit compares the temperature values recorded on the monitored CH1-CH2-CH3 channels and enables the switching of the **TRIP** contact only if the **TRIP** threshold has been exceeded on at least two channels over the same period T.

By selecting **VOTING "NO"** the function will be disabled.

Note: by setting Voting "Yes" the switching of the **ALARM** contact will anyway indicate the alarm threshold on each individual channel has been exceeded.

To enable the Voting function, read the programming section on pages 14-15.

Attention: To control the transformer correctly from a temperature point of view, enabling the VOTING function is allowed where the load distributed between the phases of the transformer is adequately balanced. In addition, any conditions of FAULT: FCC-FCC-FCD on two or more channels, with active voting, can determine the TRIP contact inhibition.

PROGRAMMED DATA DIAGNOSTICS

In case of failure of the internal memory or corruption of programmed data, just after switching on, **Ech** appears with the relevant Fault contact.
In this case, for safety reasons, the default parameters are loaded automatically (see programming table on pages 14-15).
Eliminate **Ech** by pressing RESET and run programming to enter the desired values.
Finally switch the unit off and back on to check the memory works correctly, if it is damaged **Ech** will be displayed again (send the control unit to TECSYSTEM Shanghai for repairs).

TEMPERATURE DIAGNOSTICS

When one of the temperature sensors senses a temperature 1°C higher than the alarm threshold, 5 seconds later the **ALARM** relay switches and the *ALARM* LED of the affected channel (CH*n*) lights up.
When the trip temperature limit is exceeded, the **TRIP** relay switches and the *TRIP* LED of the affected channel (CH*n*) lights up.
As soon as the recorded temperature returns to values equal to or lower than the limit set for the **ALARM** and **TRIP** relays switching, these relays de-energise and the corresponding LEDs switch off.
The **ALARM** and **TRIP** values are kept in the internal memory: they can be recalled by entering the Vis modes (programmed parameter display) and modified in PRG (programming) mode.

COOLING FAN CONTROL

The NT935 control unit is fitted with two FAN controls (FAN1 and FAN2) and, if programmed correctly, can control the fans switching ON and OFF to cool the transformer.

The FAN1 and FAN2 contacts can manage cooling the transformer and the room where it is installed.

By connecting FAN1 to the tangential cooling system (the two bars on the transformer) and FAN2 to the extractor, you will improve the air flow in the cabin; moreover, the cabin temperature will no longer need to be managed by a thermostat outside the system.

The fans can be controlled in two different ways:

- Using the temperatures sensed by the sensors on the three columns (FAN1)

  CHF 1.2.3
  (ex. ON at 70°C - OFF at 60°C)

- Via an extra sensor (**CH4/YES**) dedicated to the ambient temperature inside the transformer room (FAN2).

  CHF 4
  (ex. ON at 45°C - OFF at 35°C)

The ON and OFF values are programmable according to the device range.

FAN TEST

By programming (**HFn**), it is possible to have the fans operating 5 minutes every "*xxx*" hours, regardless of the column or ambient temperature values (i.e.: with HFn=001 the fans are activated for 5 minutes every hour).
This function aims at verifying the fan operation and their control apparatus periodically.

By setting **NO** this function is inhibited.

To enable the Hfn function, read the programming section on pages 14-15.

INTELLIFAN FUNCTION

What it is used for:

The Intellifan function allows reducing the transformer's thermal shock by partially anticipating (one bar at the time) the activation of the tangential ventilation system.

The reduction in the transformer's thermal shock will extend the life of the transformer and of the ventilation system itself.

By enabling the **FAN 1 "INT"** function, the control unit will alternate the activation (each 30 minutes) of the FAN1 and FAN2 contacts, anticipating the activation of the ventilation system at the intermediate value included between FAN1 ON and FAN1 OFF.

EX. FAN1 ON = 70°C and FAN1 OFF = 60°C **FAN INT. ACTIVATION = 65°C**

Before enabling the function, check that the connection of the two ventilation bars is distributed in such a way that the RH bar is connected to the FAN2 relay, pins 1-2, and the LH bar is connected to FAN1, pins 3-4.

By selecting **FAN1 "NO OR YES",** the function will be disabled.

Note: once the FAN1 threshold is exceeded, the control unit will activate both bars.

To enable the ***INTELLIFAN*** function, read the programming section on pages 14-15.

Note: for correctly working of the INTELLIFAN function we recommend you observe ΔT 10°C between FAN1 ON and FAN1 OFF. The connection to the VRT series devices, where Intellifan is enabled, must be made between the contacts FAN1 - COM-EN1 and FAN2 - COM-EN2.



IMPORTANT WARNING

Before carrying out the isolation test of the electrical panel the control unit is installed on, disconnect it together with the sensors from the power supply to prevent it from being seriously damaged.

RS485 MODBUS OUTPUT

(ONLY FOR NT935 AD)

INTRODUCTION TO THE MODBUS INSIDE MODULE

The MODBUS INSIDE expansion module is built in the monitoring unit and allows data transfer on a RS485 network with MODBUS RTU protocol.

OPERATING NOTES

For the module to work correctly, it is necessary to set the RS485 network set-up parameters: address, baud rate, parity bit. See programming steps 30 to 35 on page 14.
The serial communication of the temperature control monitoring unit is active only when the NT935 AD is in temperature control mode in one of the intended modes (Scan, Auto, Man and T.Max).
When other functions such as programming, programming display and relay test are activated, the ModBus communication is temporarily deactivated.

DATA TRANSMISSION ON MODBUS NETWORK

The MODBUS INSIDE internal module allows connecting the NT935 control unit to an RS485 network with Modbus RTU protocol in order to read the data shown in the MODBUS table on page 21 and write those in the notes for remote programming; the module is always in slave mode.
The NT935 AD control unit is in communication with the network only when it is in temperature reading mode, while it is inactive when in the following modes: display, programming and relay test.

RS485 ELECTRICAL CONNECTIONS

As far as the signal cable to be used in order to ensure the correct network operation is concerned, we recommend you follow the provisions of the EIA RS485 standard which suggests using a 24AWG twisted pair.
The twisted pair that connects units in RS485 might need a 120 ohm end resistor on the last unit of the series.
Connect the twisted pair paying attention to polarities and lay the network avoiding to make sharp bends or ring windings in order not to modify line impedance. If necessary, the GND terminal for grounding is also available.
Always position the RS485 twisted pair far from power cables.

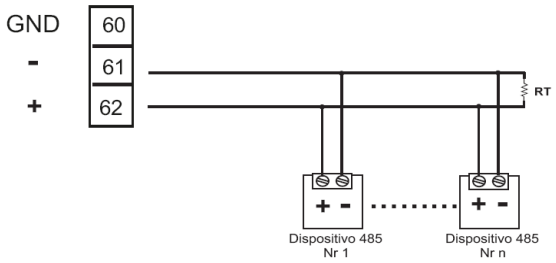

DATA FRAME

1MN0095 REV.

The frame in asynchronous transmission consists of: 1 start bit, 8 data bits, 1 parity bit (even or odd, if the parity has been set) and 1 stop bit.
Admitted baud rates are: 2400, 4800, 9600, 19200 and 38400.
If not otherwise specified, the word length (DATA) is 16 bits.

DATA PACKET

A complete sequence of request/answer consists of the following:

Master request:

SLAVE ADDRESS	- 1 byte
FUNCTION CODE	- 1 byte
DATA	- variable, it depends on the function code
CRC	- 2 bytes

Slave answer:

SLAVE ADDRESS	- 1 byte
FUNCTION CODE	- 1 byte
DATA	- variable, it depends on the function code
CRC	- 2 bytes

FUNCTION CODE

The ModBus module supports the following function codes:

$3_{(10)}$: - holding register reading

$16_{(10)}$: - register multiple writing

If ModBus receives a message and a CRC error is detected, no answer is given.

CODE $3_{(10)}$.

Request:
Slave address, code $3_{(10)}$, Starting address HI, Starting address LO, Number of Point HI, Number of Point LO, Crc LO, Crc HI.

Answer:
Slave address, code $3_{(10)}$, Byte count, Data HI, Data LO……., Crc LO, Crc HI.

CODE $16_{(10)}$.

Request:
Slave address, code $16_{(10)}$, Starting address HI, Starting address LO, Number of Point HI, Number of Point LO, Byte count, Data HI, Data LO……., Crc LO, Crc HI.

Answer:
Slave address, code $16_{(10)}$, Starting address HI, Starting address LO, Number of Register HI, Number of register LO, Crc LO, Crc HI.

NOTES FOR REMOTE PROGRAMMING

The writeable registers are shown in the MODBUS MAPPING TABLE as W or RW (**write or read/write)** max number of registers 72, see table page. 20.

Channels 1÷3 are not disabled; in case of incorrect setting, they are always forced as enabled channels.

If the channel 4 is not enabled and/or the information is not provided for, the following answers are given:

1. **Measured temperatures = 0000 (0°C)**
2. **Temperature AL./TRIP = Value written in E2PROM**
3. **Channel state = 0000**
4. **Channel setting = %00000000; %xxxxxxx0 (x=n.d.)**

If the information is sent to 4.20mA output = Ch_4 and it is disabled it is forced mode " HOT" ; the same policy applies to programming from panel.

If writing information is sent towards a READ-only register, the data will be binned without affecting the message received.

The "RELAYS STATUS" information indicates the state of excitation of the relay coils.

At the end of the Write command, data compatibility is checked:

1. **in case of incompatibility, the answer is an "exception" and the data packet is refused in full. The code of the first wrong datum can be requested reading the "Datum error received" register. (NB: this code is lost during RESET, switching on or data writing in E2PROM);**
2. **if the data are correct, they are transferred into the non-volatile memory (E2PROM), historical data are cancelled (Tmax=0°C) and, then, a system RESET is forced.**
3. **If the WRITE command entails only writing "COMMANDS", it will be performed autonomously and without a RESET, that is without affecting the control unit data.**

Also in remote programming via ModBus you must take into consideration that the Alarm thresholds must be lower than the Trip thresholds and that the Fan-on thresholds must be higher than the Fan-off thresholds.

If you try to set these thresholds wrongly, the NT935 monitoring unit won't proceed with programming and data storage; therefore in the following readings you will read the data relevant to the previous programming.

After sending a writing request, the monitoring unit will require approximately 1'' to store the data in eeprom; during the storage phase, the ModBus module will not be able to process other requests.
If the programming request is successful, the control unit automatically resets and loads the newly set values.

ERROR CODES (exception codes)

In case of a wrong request, ModBus will answer with modified codes and codified errors according to the following:

1: - Unsupported function code
2: - Wrong data address
3: - Wrong data (for instance length)

The memory area containing the HFN datum must undergo no forcing.

In the case in which all the fans are turned off (F1, F2) the test of the relay will not take place.

UNACCEPTABLE DATA

Some programming is unacceptable since the NT935 AD does not provide for it; these data are discarded with no EXCEPTION CODE.

CH 1-2-3: → channels cannot be disabled
CH 1-2-3: → FAN_2 cannot be enabled
CH 4: → FAN_1 cannot be enabled
CH 4: → FAN_INT cannot be enabled
CH 4: → FAN_2 cannot be enabled if CH 4=no

ILLEGAL DATA

On the other hand, some combinations are programming errors because they are wrong settings; in this case the error code is ILLEGAL_DATA. This information is accessible to ModBus by reading the register 7.

NO ERROR	No error 00
CH_1 Trip ≤ Alarm	Code error 01
CH_4 Trip ≤ Alarm	Code error 04
FAN_1 ON ≤ OFF 0 FAN INT ≤ 10	Code error 017
FAN_2 ON ≤ OFF	Code error 018
Value HFN > max see table: SYSTEM - Setting and Status	Code error 020
Value FCD > max see table: SYSTEM - Setting and Status	Code error 021
Value 4.20 > max see table: SYSTEM - Setting and Status	Code error 022
Value Voting > max see table: SYSTEM - Setting and Status	Code error 023

GENERAL UNIT NOTE

The models of the unit can be equipped with different options ; to avoid disruption of production , their existence is defined by Fw indicated power , with messages dedicated on display LEDs .

This information can be accessed by reading the Modbus register 6 (option) with the following meaning :
LOW Byte

Bit_0 = AD: 4.20mA + Modbus RS485

HIGH Byte
Bit_0/1 = 00 - Range 0°C - 240°C
Bit_0/1 = 10 - Range -40°C ÷ +200°C

In case of Ethernet option Modbus and 4.20mA mode shall not be active on the display. They will be readable from the log.

Note: in case the values programmed from ModBus are out of range, it will generate a "exception" error response to date.

POLLING FREQUENCY

We recommend polling frequencies equal to or greater than 1 second are adopted.
More frequent polling can overload the system without any benefit whatsoever. In multi-device RS485 lines, interrogated in sequence, it may be useful to enter a delay between polls in relation to: the number of connected devices, the communication speed and the number of read registers.

MODBUS MAPPING TABLE

HEADER (information and commands):

Address LO (10)	**Data HI**	**Data LO**	**R: read W:write RW: read/write**
1	Modello – MSD (ASCII)	Modello - 3° Digit (ASCII)	R
2	Modello - 2° Digit (ASCII)	Modello – LSD (ASCII)	R
3	Space (20H)	Vers. Fw – MSD(ASCII)	R
4	Vers. Fw - 2° Digit (ASCII)	Vers. Fw – LSD(ASCII)	R
5	Channels qty (2*ASCII)		R
6	Options (see note)	Options (see note)	R
7	00	Wrong datum received	R-see tab.
8	00	Info various causes	R-see tab
9	00	Commands	W-see tab.

SYSTEM: Setting and Status

Address LO (10)	**Data HI**	**Data LO**	**Note 1**	**Note 2**	**R: read W:write RW: read/write**
10	00	HFN (Fan test)	0=No test	1÷200h	RW
11	00	FCD	temperature increment	0=No FCD 1÷30°/sec	RW
12	00	Voting	0=No Voting 1=YES		RW
13	00	CPU Setting	See Note		RW
14	00	CPU Error	See Note		R
15	00	Relays Status	See Note		R
16	00	420 mA channel	reference channel for 4.20 mA	0=hot 1÷4= ch1÷4 5=scan	RW

17	00	Address	Modbus address	1÷255	R
18	00	Bdr	Modbus baud rate	0=2400 1=4800 2=9600 3=19200 4=38400	R
19	00	Parity	Modbus parity bit	0=No 1=Even 2=Odd	R
20	00	FREE	See Note		R

TEMPERATURE FANs:

Address LO (10)	Data HI	Data LO	Note 1	Note 2	R: read W:write RW: read/write
21	2'compl. sign	Fan_1 ON	1°C ÷ 240°C 1°C ÷ 200°C (*)		RW
22	2'compl. sign	Fan_1 OFF	1° to÷ 240° 1°C ÷ 200°C (*)		RW
23	2'compl. sign	Fan_2 ON	1° to÷ 240° 1°C ÷ 200°C (*)		RW
24	2'compl. sign	Fan_2 OFF	1° to÷ 240° 1°C ÷ 200°C(*)		RW

(*) for version **–**40°C ÷ +200°C

TEMPERATURES channels 1÷4:

Address LO (10)	Data HI	Data LO	Note 1	Note 2	R: read W:write RW: read/write
25	2'compl. sign	2'compl. Ch1 temper.	–10°C ÷ 240°C –48°C÷200°C (*)		R
26	2'compl. sign	2'compl. Ch1 max temperat.	0°C ÷ 240°C 0°C÷200°C (*)		R
27	2'compl. sign	2'compl. Ch1 temper. alarm set point	1°C ÷ 240°C 1°C÷200°C (*)	(AL)	RW
28	2'compl. sign	2'compl. Ch1 temper. trip set point	1°C ÷ 240°C 1°C÷200°C (*)	(TRP)	RW
29	2'compl. sign	2'compl. Ch2 temper.	–10°C ÷ 240°C –48°C÷200°C (*)		R
30	2'compl. sign	2'compl. Ch2 max temperat.	0°C÷ 240°C 0°C÷200°C (*)		R
31	2'compl. sign	2'compl. Ch2 temper. alarm set point	1°C ÷ 240°C 1°C÷200°C (*)	As (AL)	R
32	2'compl. sign	2'compl. Ch2 temper. trip set point	1°C ÷ 240°C 1°C÷200°C (*)	As (TRP)	R
33	2'compl. sign	2'compl. Ch3 temper.	–10°C ÷ 240°C –48°C÷200°C (*)		R
34	2'compl. sign	2'compl. Ch3 max temperat.	0°C ÷ 240°C 0°C÷200°C (*)		R

35	2'compl. sign	2'compl. Ch3 temper. alarm set point	1°C ÷ 240°C 1°C÷200°C (*)	As (AL)	R
36	2'compl. sign	2'compl. Ch3 temper. trip set point	1°C ÷ 240°C 1°C÷200°C (*)	As (TRP)	R
37	2'compl. sign	2'compl. Ch4 temper.	–10°C ÷ 240°C –48°C÷200°C(*)		R
38	2'compl. sign	2'compl. Ch4 max temperat.	0°C ÷ 240°C 0°C÷200°C (*)		R
39	2'compl. sign	2'compl. Ch4 temper. alarm set point	1°C ÷ 240°C 1°C÷200°C (*)		RW
40	2'compl. sign	2'compl. Ch4 temper. trip set point	1°C ÷ 240°C 1°C÷200°C (*)		RW
41	00	00			R
42	00	00			R
43	00	00			R
44	00	00			R
45	00	00			R
46	00	00			R
47	00	00			R
48	00	00			R
49	00	00			R
50	00	00			R
51	00	00			R
52	00	00			R
53	00	00			R
54	00	00			R
55	00	00			R
56	00	00			R

(*) for version –40°C ÷ +200°C

CHANNELs 1÷4: Setting

Address LO (10)	Data HI	Data LO	Note 1	Note 2	R: read W:write RW: read/write
57	00	Ch1 Setting	See Note CHx		RW
58	00	Ch2 Setting	See Note CHx		RW
59	00	Ch3 Setting	See Note CHx		RW
60	00	Ch4 Setting	See Note CHx		RW
61	00	00	--		R
62	00	00	--		R
63	00	00	--		R
64	00	00	--		R

CHANNELs 1÷4: Status

Address LO (10)	Data HI	Data LO	Note 1	Note 2	R: read W:write RW: read/write
65	Ch1 story	Ch1 status	See Note CHx		R
66	Ch2 story	Ch2 status	See Note CHx		R
67	Ch3 story	Ch3 status	See Note CHx		R
68	Ch4 story	Ch4 status	See Note CHx		R
69	00	00	--		R
70	00	00	--		R
71	00	00	--		R
72	00	00	--		R

INFO various causes (READ)

BIT 7	BIT 6	BIT 5	BIT 4	BIT 3	BIT 2	BIT 1	BIT 0
--	--	--	-	-	-	-	*(*) RESET (R) has taken place*

COMMANDS (WRITE)

BIT 7	BIT 6	BIT 5	BIT 4	BIT 3	BIT 2	BIT 1	BIT 0
--	--	--	-	-	*(*) Reset CPU_Error*	*(*) Reset historical data*	*(*) Zero. BIT: RESET has taken place*

CHn SETTING

BIT 7	BIT 6	BIT 5	BIT 4	BIT 3	BIT 2	BIT 1	BIT 0
--	--	--	--	FAN_INT	FAN2	FAN1	CAN_enabled

CHn STATUS

BIT 7	BIT 6	BIT 5	BIT 4	BIT 3	BIT 2	BIT 1	BIT 0
--	TRIP	ALARM	FAN_2	FAN_1	FCD	FOC	FCC

CHn STORY

BIT 7	BIT 6	BIT 5	BIT 4	BIT 3	BIT 2	BIT 1	BIT 0
--	TRIP	ALARM	--	--	--	FOC	FCC

RELAY STATUS (coil energizing status)

BIT 7	BIT 6	BIT 5	BIT 4	BIT 3	BIT 2	BIT 1	BIT 0
--	--	--	FAULT relay 1=No fault	TRIP relay 1=ON	ALARM relay 1=ON	FAN_2 relay 1=ON	FAN_1 relay 1=ON

CPU ERROR

BIT 7	BIT 6	BIT 5	BIT 4	BIT 3	BIT 2	BIT 1	BIT 0
--	--	--	--	PT ERROR	CAL	FCD Fault	ECH

CPU SETTING

BIT 7	BIT 6	BIT 5	BIT 4	BIT 3	BIT 2	BIT 1	BIT 0
--	--	--	--	--	--	--	--

OUTPUT 4.20mA

ONLY FOR NT935 AD

It is possible to connect a displaying or acquisition device to the 4.20 mA output.
The permitted load impedance for each output is from 0 to 500 ohm.
The loop is optically isolated to guarantee the maximum immunity to interference.

The 4-20 mA signal is referred to the 0-240°C range with an accuracy of 1% of full scale value

The output can be programmed in the following modes:

1-2-3-4: the 4.20 mA output refers to the fixed channel that has been set.
SCAN: the 4.20 mA output automatically scans the active channels every 2 seconds (default setting)
HOT: the 4.20mA output automatically refers to the hottest channel among the active ones

See steps 36 - 37 of the table on page 14.

Note: if the 4.20 output is programmed on CH4 and this is disabled, the control unit will automatically set on HOT.

The current-temperature ratio varies according to the device temperature range:

For the range 0°C + 240°C the ratio is: I_{out}= (T/15)+4 (T=temperature in °C)
For the range –40°C + 200°C the ratio is: I_{out}= (T/15)+6.7 (T=temperature in °C)

Example: range 0°C + 240°C:

If T=100°C I_{out}= 100/15+4= 10.67 mA (±0.2 mA)

Note: We recommend you use a screened and twisted cable; connect the twisted pair taking polarities into account and lay the network avoiding narrow bends or ring windings. Always position the twisted pair far from power cables.

Pt100 EXTENSION CABLE TECHNICAL SPECIFICATIONS

1. Cable 20 x AWG 20/19 Cu/Sn
2. Section 0.55 mm²
3. Flame retardant insulation PVC105
4. CEI 20.35 IEC 332.1 regulations
5. Maximum operating temperature: 90°C
6. Conformation: 4 sets of three twisted and coloured conductors
7. Shield in Cu/Sn
8. Flame retardant PVC sheath
9. External diameter 12mm
10. Standard conformation in 100m coils

FCD FUNCTION

The NT series equipment boasts an innovative control function combined with the dynamic status of the Pt100 sensor.

Activating FCD, the control unit analyses the increase in temperature ΔT (*) recorded in a second (**°C/sec**).

Enabling the function, the user can select the value (ΔT) from a minimum of 1°C/sec to a maximum of 30°C/ sec. If the value sensed is higher than the value set by the user, the control unit inhibits the possible activation of the ALARM and TRIP alarms and switches the FAULT relay (11-12), displaying the message **"Fcd fault".**

Example: if we set the function to 5°C, FAULT will switch for FCD only if the control unit senses an increase in ΔT of over 5°C in a second on the monitored system.

Setting "no" disables the FCD function.

When a channel is in FAULT for FCD, the relative Alarm and Trip warnings are inhibited on the single channel; therefore only the over-quick temperature increase is highlighted.

Press Reset to delete the FCD warnings on all channels and reset the FAULT relay.

Possible FCD applications

Identification of a possible induced interference on the Pt100 sensor line

If the installation instructions are not complied with (see page 15), any interference on the Pt100 sensor line can cause false readings or anomalous alarms.

Setting the FCD function in a temperature range of between 1°C and 10°C
(5°C recommended), the effects caused by false readings can be suppressed and the alarm relay activation can be prevented, as shown above.

Corrective actions: check the installation of the sensor extension cable is in line with the instructions given in the paragraph on the measurement signal transfer on page 15.

Identification of a sensor fault or faulty connection

In case of a faulty connection or sensor fault, a quick positive or negative variation in temperature might occur, leading to the system tripping or the alarms of the monitored system to be triggered.

In this specific case we recommend the FCD function to be set in a temperature range of between 10°C and 20°C.

Corrective actions: check the terminals the sensor is connected to are tightened and replace the faulty sensor, if required.

Identification of the electrical motor rotor block

In case of temperature control of the electrical motors, the quick temperature increase might be due to a blocked rotor.

In this specific case we recommend the FCD function to be set in a temperature range of between 20°C and 30°C**.** This setting is recommended in order to prevent the FCD function from activating during motor startup, or where the **ΔT/sec.** increase varies quickly.

(*) The ΔT value shows the temperature range for each second.

NOTE: you should not enable the FCD function with active VOTING.

WARRANTY CONDITIONS

The Product purchased is covered by the manufacturer's or seller's warranty at the terms and conditions set forth in the "Tecsystem shanghai Co., Ltd. ‘s General Conditions of Sale", available at www.tecsystem.asia and / or in the purchase agreement.
The warranty is considered valid only when the product is damaged by causes attributable to TECSYSTEM Shanghai Co.,Ltd., such as manufacturing or components defects.
The warranty is invalid if the Product proves to have been tampered with / modified, incorrectly connected, because of voltages outside the limits, non-compliance with the assembly and use technical data, as described in this instruction manual.

TROUBLESHOOTING	**CAUSES AND *SOLUTIONS***
The control unit does not switch on and the supply to terminals 40-42 is correct.	Check that: the connector is correctly inserted into its housing, the wires are tightened, there is no evidence of burning on the connectors. Disconnect the power supply, carry out the above and reconnect.
CH4 is in FAULT because of FOC (only the 3 Pt100 sensors are connected)	Programming error of the CH4 / YES control unit. *Check and repeat programming as per page 14-15, select CH4 / NO.*
One of the three/four channels is in FAULT due to FOC/FCC	Check the connections of the Pt100 sensors, check the instructions given in the paragraphs: *measurement signal transfer and temperature sensor diagnostics on page 16-17.*
When turning on, the display shows “ECH”	Strong interference has damaged the stored data. See the paragraph Programmed data diagnostics on page 16.
All the PT100 sensors are in FCC.	Incorrect sensor connection, the terminal block has been inserted upside down. *Check the connections and the terminal board.*
The temperature shown by one or more channels is wrong.	Contact the *TECSYSTEM Technical Department.*
Sudden trip of the main switch. The temperature is on standard levels. Just one channel has caused the trip.	Check the temperatures recorded in T-MAX, check the instructions given in the paragraphs: *measurement signal transfer and temperature sensor diagnostics on page 16. Activate the FCD function.*
FCD warning	See the FCD function on page 28.
Contact *TECSYSTEM Technical Department if the problem persists.*	

EQUIPMENT DISPOSAL

European directives 2012/19/EC (WEEE) and 2011/65/EC (RoHS) have been approved to reduce electrical and electronic waste and promote the recycling and reuse of the materials and components of said equipment, cutting down on the disposal of the residues and harmful components of electrical and electronic materials.



All the electrical and electronic equipment supplied after 13 August 2005 is marked with this symbol, pursuant to European directive 2002/96/EEC on electrical and electronic waste (WEEE). Any electrical or electronic equipment marked with this symbol must be disposed of separately from normal domestic waste.

Returning used electrical devices: contact TECSYSTEM or your TECSYSTEM agent for information on the correct disposal of the devices.

TECSYSTEM is aware of the impact its products have on the environment and asks its customers active support in the correct and environmentally-friendly disposal of its devices.

USEFUL CONTACTS

TECHNICAL INFORMATION : campisi@tecsystem.asia

SALES INFORMATION : georgeyang@tecsystem.asia
miawang@tecsystem.asia

UL SPECIFICATION AND RATINGS

CABLE SPECIFICATION	Dimension for main circuit 18AWG, working temperature over 105 ℃
MASS OF THE EQUIPMENT	0,45 Kg
INPUT SUPPLY	24 – 240 Vac / Vdc (±10%), 50/60 Hz, 7,5VA max
PROTECTION	External switch or circuit breaker
OUTPUTS RELAYS	5 relay Output: 10A 250Vac-res COS=1
OPTIONAL PORTS (AD)	RS485 + 4.20mA
Suitable for use on a flat surface of a type 1 enclosure if Back panel is provided with two short fixing screws tightening torque : 0.57Nm	

产品说明手册

NT935

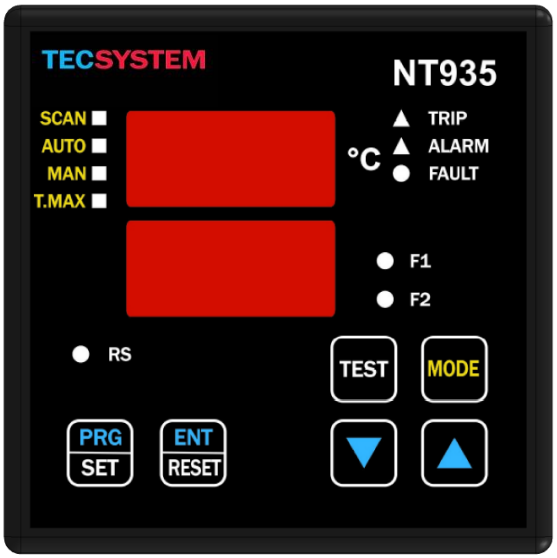

1MN0102 REV. 0

TECSYSTEM
temperature protection relays & ventilation

lead-free

RoHS

符合 IS09001 认证质量体系

泰狮智能温控（上海）有限公司
中国上海市嘉定区马陆镇
复华路 33 号 5 幢 B 区三层
Tel.: +86 21 39905855/56/57
Fax: +86 21 39905859

http://www.tecsystem.asia

R. 1.7 28/09/17

中文

说明

首先，感谢您选择使用**TECSYSTEM**产品，我们建议您仔细阅读本说明手册：您将了解设备的使用，并因此而能够运用它的所有功能。

注意！本手册是关于NT935 BASIC和NT935 AD控制装置的有效完整说明。

目录

	页码
1) 安全性要求	4
2) 配件	5
3) 技术规格	6
4) 前部面板	8
• 显示器	9
• 操作程序控制	—
• 扫描和手动功能说明	—
• LED 测试	—
• 警报继电器测试	—
• 警报继电器消音	—
5) 安装	10
6) 电气连接 NT935 BASIC	11
• NT935 AD 背面	12
• 电源	13
• 警报和通风	—
• 故障和重置消息序列	—
7) 编程	14
• NT935	—
• 编程说明	16
• 温度传感器	—
• 测量信号传输	—
• 温度传感器诊断	17
• 冗余功能	—
• 编程数据诊断	—
• 温度诊断	—
• 冷却风扇控制	18
• 风扇测试	—
• 智能风扇功能	—

		页码
8) **RS485 通信接口**	……	19
• 模块内通信接口简介	……	—
• 运行说明	……	—
• 通信接口网络数据传输	……	—
• RS485 电气连接	……	—
• 数据帧	……	—
• 数据包	……	—
• 功能代码	……	20
• 代码3(10).	……	—
• 代码16(10).	……	—
• 远程编程说明	……	—
• 错误代码	……	21
• 不允许数据	……	—
• 非法数据	……	—
• 轮询频率	……	—
• 通信接口映射表	……	22
9) 输出 4.20mA	……	27
10) Pt100 延长电缆技术规格	……	—
11) FCD 功能	……	28
12) 保修条件	……	—
13) 故障排除	……	29
14) 设备处置	……	—
15) 有用联系人	……	—
16) UL 规格和额定值	……	30

安全性要求



注意:

开始使用控制装置前，请先阅读本手册。并妥善保存以备日后查阅。



禁止打开设备，触摸任何内部零件可能遭到电击，电压超过50伏可能导致致命。为了减少电击危险，禁止拆下设备背板。打开设备将使保修失效。

连接设备的电源之前，请确保所有连接正确。对电缆进行任何修改前，始终要断开装置的电源。



对设备进行的任何操作都必须由合格的技术人员执行。.
拒绝遵守这些说明可能导致损坏、起火或电击，还有可能造成严重的人身伤害！

电源
NT935系列控制装置使用通用电源，即可以通过24-240 Vac-Vdc电源供电，直流电源不考虑极性。
使用前，请确保电源线未损坏、打结或压扁。切勿篡改电源线。断开装置电源时，切勿拉扯电源线，避免触摸线夹。切勿用湿手进行任何连接/断开操作。切勿使用操作杆等物体断开设备电源。如果闻到烟味或看到烟雾，请立即断开设备电源，并联系技术服务人员。

液体
切勿让液体溅到或滴到设备上，设备放置区域的湿度不得超过 90%，切勿在暴风雨天气用有水或潮湿的手触摸装置。如果有任何液体渗透到控制装置中，请立即断开电源并联系技术服务人员。

清洁
清洁控制装置前，请先断开电源，再使用干抹布擦拭，无需使用任何溶剂或洗涤剂，最后用压缩空气吹净。.

物体
切勿将任何物体插入控制装置的缝隙中。否则，请断开控制装置电源，并联系技术服务人员。

专供合格人员使用
您购买的产品是高级电子设备，禁止由不具备合格资质的人员使用。任何操作均须由具有合格资质的技术人员执行。

配件
使用非原装配件或备件可能损坏装置并危及使用者的性命安全。出现故障时，请联系技术服务人员。

位置
将控制装置安装在室内，防止雨淋和日晒。装置附近不得存在超出本手册规定参数的热源。放在稳固平面上，远离任何可能的震动。装置应尽可能远离强烈磁场。

修理
请勿打开控制装置。如果出现故障，始终应联系具有合格资质的人员。打开控制装置和/或撕除序列识别标签将导致保修自动失效。所有设备都有保修封条，试图打开装置将破坏封条，进而导致保修自动失效。.

功能

通过温度正确控制变压器，从而当变压器相间负载均衡分配时允许启用冗余功能。

技术信息

Mail: campisi@tecsystem.asia— tel: +86 21 39905855

配件

包装盒中包含以下物品:

控制装置



产品说明书(CD 光盘)



2 个面板安装块

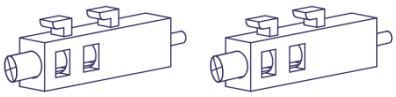

1 个电源接线端子 3 个接线柱间距 5
代码: 2PL0367 -螺钉，拧紧扭矩 0.5Nm



1 个继电器接线端子 12 个接线柱间距 5
代码: 2PL0361-螺钉，拧紧扭矩 0.5Nm

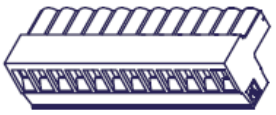

1 个 Pt100 传感器接线端子 12 个接线柱间距 3.81
代码: 2PL0420 -螺钉，拧紧扭矩 0.25Nm

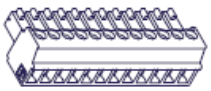

1 个接线端子 2 个接线柱间距 5，适用于 4.20mA 输出(*)
代码: 2PL0364 or 2PL0363- 螺钉，拧紧扭矩 0.5Nm



1 个 RS485 接线端子 3 个接线柱间距 3.81(*)
代码: 2PL0366 -螺钉，拧紧扭矩 0.25Nm



(*)仅适用于 NT935 AD 版本

注意：请始终使用包装中提供的接线端子安装设备。
除控制装置中提供的接线端子以外，使用其他接线端子可能导致装置出现故障。

技术规格	NT935 BASIC	NT935 AD
电源		
电源额定值	24-240 Vac-Vdc 50/60HZ	24-240 Vac-Vdc 50/60HZ
最大电源值和最小电源值	20-270 Vac-Vdc 50/60HZ	20-270 Vac-Vdc 50/60HZ
Vdc，极性可逆	•	•
输入		
4个RTD传感器输入，Pt100类型，3芯（最大截面积1.5mm²）	•	•
可卸除式接线端子上的连接线	•	•
受电磁干扰保护的输入通道	•	•
热敏电阻器电缆补偿	500 m (1 mm²)	500 m (1 mm²)
输出		
2 个警报继电器（警报和跳闸）SPDT	•	•
1 个传感器或运行故障（故障）继电器 SPST	•	•
带10A-250Vac-res COSΦ=1触点的输出继电器	•	•
2 个通风管理继电器 SPST FAN 1 和 FAN 2	•	•
通信接口 RTU RS485 输出	NO	•
光隔离 4.20 mA 输出	NO	•
尺寸		
100x100 mm - din43700-深度131mm（含接线端子）	孔 92 x 92 mm	孔 92 x 92 mm
测试和性能		
构造符合 CE 标准	•	•
电气干扰保护 EN 61000-4-4	•	•
输出继电器与传感器之间、继电器与电源之间、电源与传感器之间的电介质强度 1500 Vac，持续 1 分钟	•	•
准确度±1%全量程值，±1位数	•	•
环境工作温度 - 20° C至+60° C	•	•
湿度 90%，不凝结	•	•
前面板覆膜聚碳酸酯 IP65	•	•

技术规格	NT935 BASIC	NT935 AD
外壳改性聚苯醚 94 _V0	•	•
吸收 7.5VA	•	•
数据存储最低 10 年	•	•
传感器信号数字线性化	•	•
自诊断电路	•	•
电子零部件保护处理	选项	选项
显示器和数据管理		
2X13mm 显示器，3 位数，显示温度、消息和通道	•	•
3 个 LED 显示选定通道的警报状态（警报-跳闸-故障）	•	•
2 个 LED 显示 FAN1 和 FAN2 状态	•	•
温度控制从0° C至240° C(*)	•	•
通道 1-2-3 的 2 个警报阈值	•	•
通道 4 的 2 个警报阈值	•	•
针对 FAN 1 和 FAN 2 的 2 个开-关阈值	•	•
传感器诊断(Fcc-Foc-Fcd)	•	•
数据存储诊断(Ech)	•	•
通过前部键盘进入编程	•	•
不活动状态持续 1 分钟后自动退出继电器编程、显示器和测试	•	•
错误编程警告	•	•
在通道自动扫描、最高温通道或手动扫描之间选择	•	•
存储通道和警报状态达到的最高温度	•	•
前部按键重置警报	•	•
冗余功能	•	•
智能风扇功能	•	•

(*)按需提供，可用版本-40°C 至 200°C，警报温度管理范围 0°C 至 200°C。

前部面板

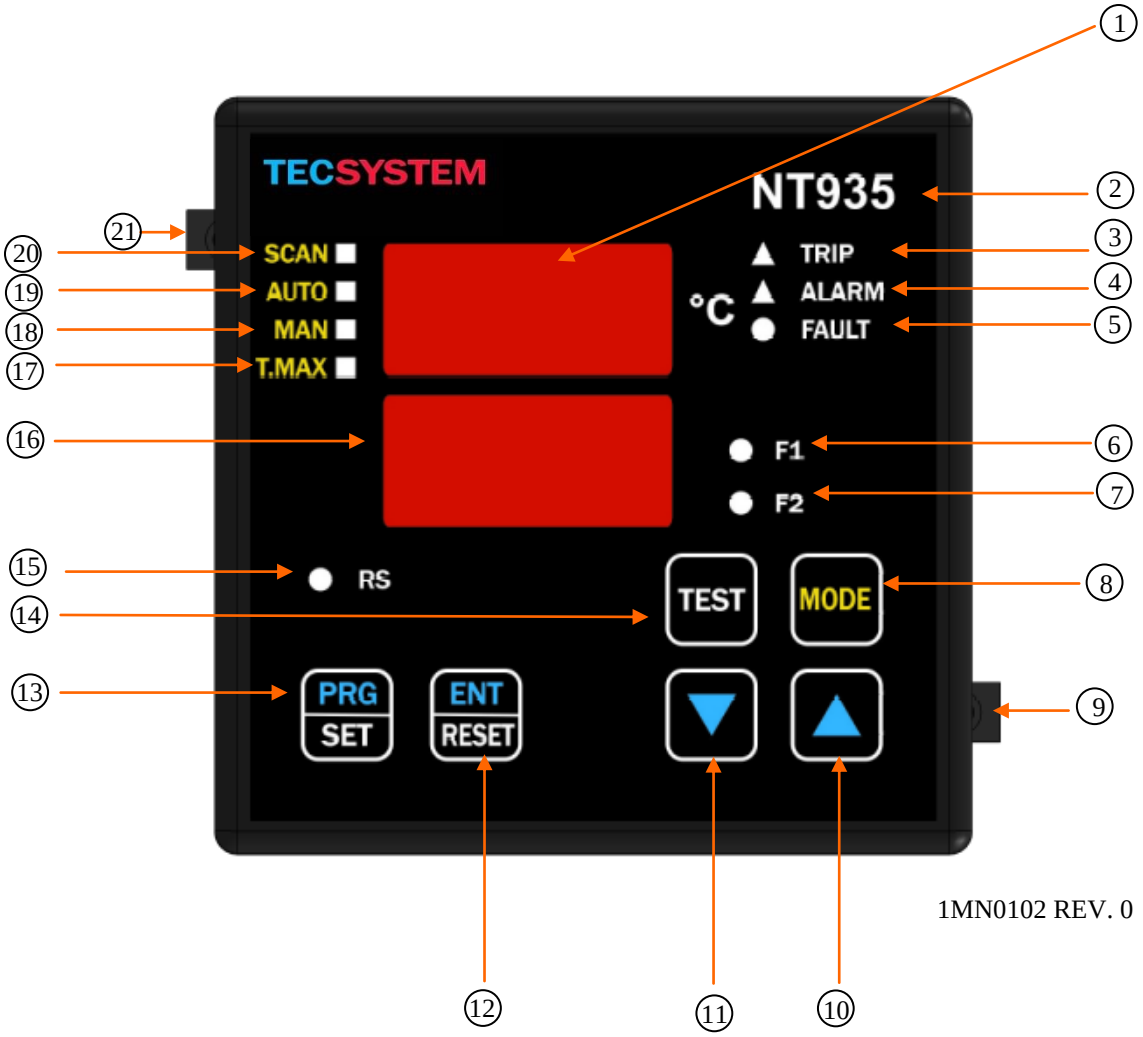

1)	3 位数温度显示	12)	输入/重置按钮
2)	控制装置序列	13)	编程/设定键
3)	跳闸（红色） LED	14)	LED/继电器测试键
4)	警报（黄色）LED	15)	通信接口 RS 通信（绿色）LED（仅适用于 AD）
5)	故障（红色 LED	16)	3 位数通道显示
6)	FAN 1 （黄色）LED	17)	最高温度模式选择（红色）LED
7)	FAN 2 （黄色）LED	18)	手动模式选择（黄色）LED
8)	显示模式选择键	19)	自动模式选择（绿色） LED
9)	固定块	20)	扫描模式选择（黄色）LED
10)	向上键	21)	固定块
11)	向下键		

显示器
第一个显示器专用于显示温度
第二个显示器专用于显示受监测的通道。

打开设备或进行重置后，显示器显示 NT935 控制装置型号：BAS（无选项）或 AD，版本号“00”（固件版本）和温度范围。
按“模式”键，显示模式可以设定为:
●*扫描*：监测装置每2秒钟显示所有已激活(° C)和未激活(NO)的通道扫描。
●*自动*：监测装置自动显示最高温通道
●*手动*：使用向上/下键　　手动读取通道温度.
●*最高温度*：监测装置显示传感器达到的最高温度和在上一次重置后发生任何警报或故障的情形。使用光标▲▼选择通道，使用“重置”重置值.

操作程序控制

要控制编程的保护级别，按“PRG”按钮两次以进入 **VIS** 显示模式。反复按“PRG”键多次可一次滚动浏览之前加载的所有值。
键盘持续 1 分钟没有任何操作时，编程显示程序自动取消。

要停止显示，按“ENT”键。

扫描和手动功能说明

在“扫描”和“手动”模式中，可以显示NT935的操作
1) 运行**cPU**:
装置正常运行，不出现任何系统错误时，显示该消息。
2) Ech Err:
检测到 EEPROM 内存被损坏时，显示该消息。
按“重置”将取消该消息并还原第14-15页编程部分列出的原始默认参数。将控制装置返还给TECSYSTEM进行修理。
3) CAL Err:
测量电路中发现损坏时，显示该消息。
显示的温度值可能不正确。将控制装置返还给TECSYSTEM进行修理。.
4) Pt Err :
检测到一个或多个PT100传感器不正常工作，以及出现第17页温度传感器诊断部分部分所述的FOC、FCC和FCD指示时，显示该消息，如果出现**错误**，故障继电器将断电。

上述消息将按照 1-2-3-4 的优先顺序进行显示。
说明：无论处于任何一种显示模式，传感器发生故障时（fcc、foc或fcd），控制装置都将自动切换到**扫描**（**基于权限的扫描**）**模式**，您可以立即在相关通道CH上看到**故障。**（模式**键禁用**）**。**

LED 测试

我们建议定期执行控制装置 LED 测试。
要进行此操作，短按“测试”键：所有显示器将打开 2 秒钟。
如果其中一个LED不工作，请将控制装置返还给TECSYSTEM进行修理.

警报继电器测试

该功能可在不使用任何其他设备的情况下测试继电器的运行情况。要启动测试程序，按住“测试”按钮约 5 秒钟：TST 持续显示 2 秒钟，确认您已经进入“继电器测试”模式。
亮起的 LED 显示要测试的继电器；使用光标▲▼选择要测试的继电器。
按“设定”和“重置”键使要测试的继电器通电和断电；显示器将显示 ON-OFF。
键盘持续 1 分钟没有任何操作时，“继电器测试”程序自动取消。
要停止“继电器测试”程序，按“测试”键。
或者您也可以使用 PT100 模拟器（型号：SIM PT100）。

警报继电器消音

如果要给警报信号消音，按“重置”键：继电器断电，且固定的“警报 LED”开始闪烁。温度低于警报阈值时，消音自动被禁用。.

安装

在面板中钻一个92 x 92 mm的孔

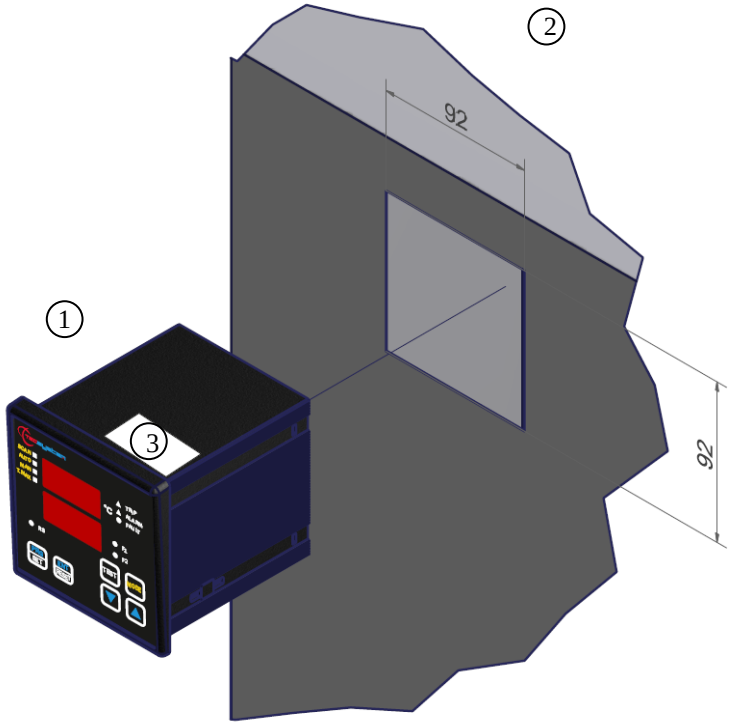

1MN0007 REV. 0

1)	控制装置	2)	面板孔尺寸（+0. 8mm 公差）
3)	识别标签		

使用随附的固定块牢牢固定装置

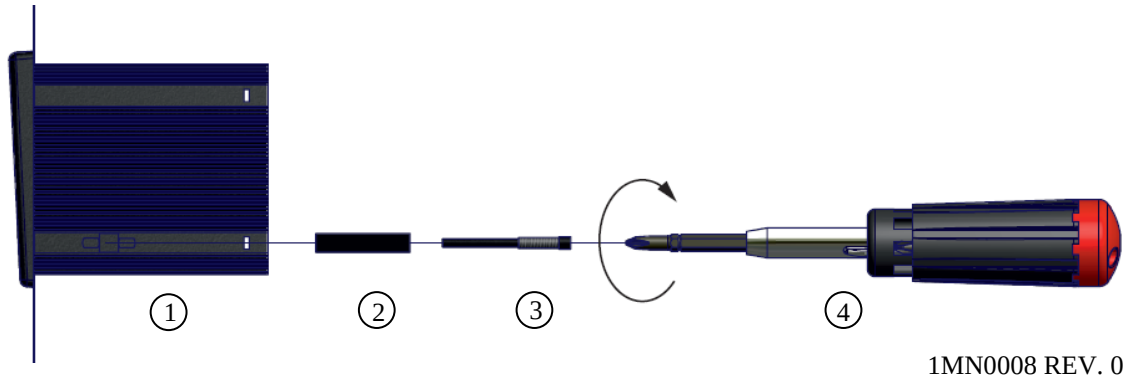

1MN0008 REV. 0

1)	控制装置	3)	固定螺钉
2)	固定块	4)	十字头螺丝起子#1X100mm

电气连接

NT935 BASIC

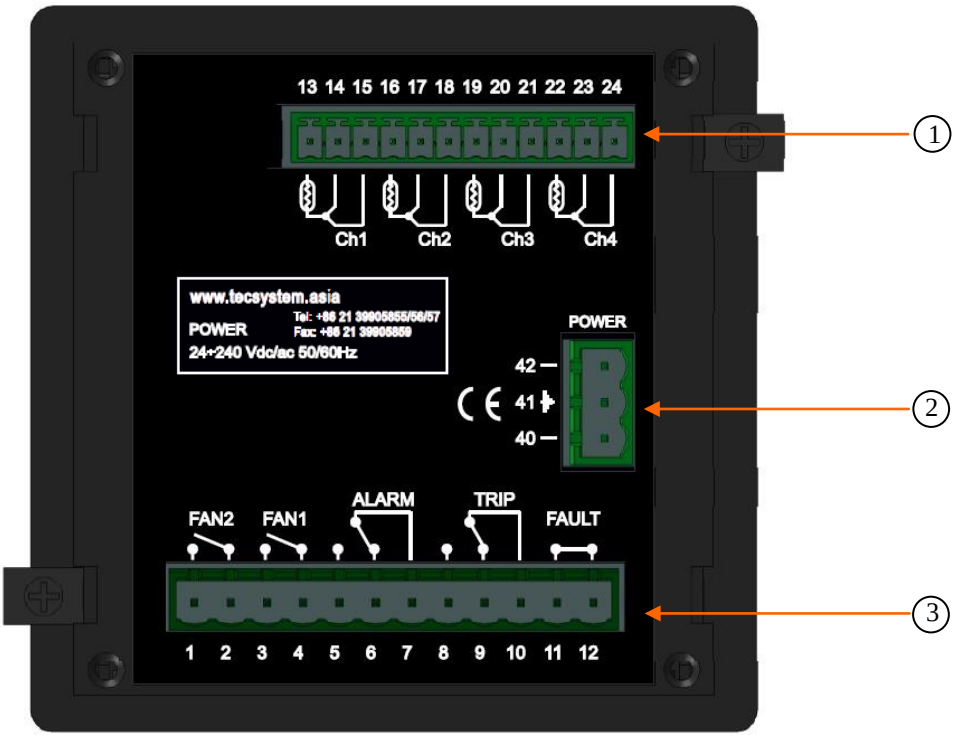

1)	Pt100 传感器（白色-红色-红色）	3)	继电器（FAN2-FAN1-警报-跳闸-故障）
2)	电源 24-240Vac-dc 50/60Hz.		

说明：继电器触点图像处于无警报状况，故障继电器打开异常：触点 11-12 打开（常开），触点 11-12 关闭（常闭）故障状况标识。阅读第 13 页的警报和通风部分。

继电器连接示例

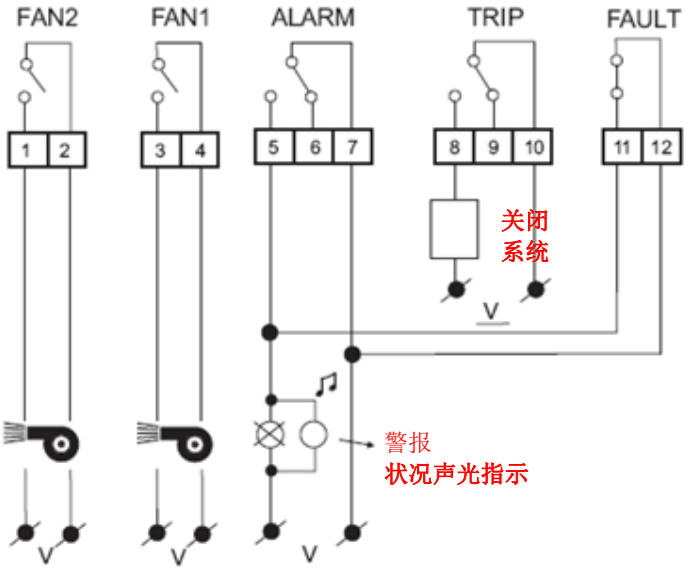

带10A-250Vac-res COSΦ=1触点的输出继电器

Pt100 连接示例

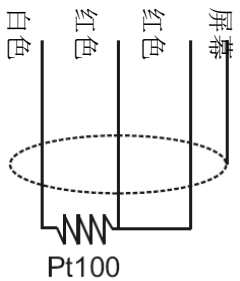

说明：连接传感器与控制装置前，请先阅读第16页的测量信号传输部分。

1MN0095 REV. 0

电气连接

NT935 AD

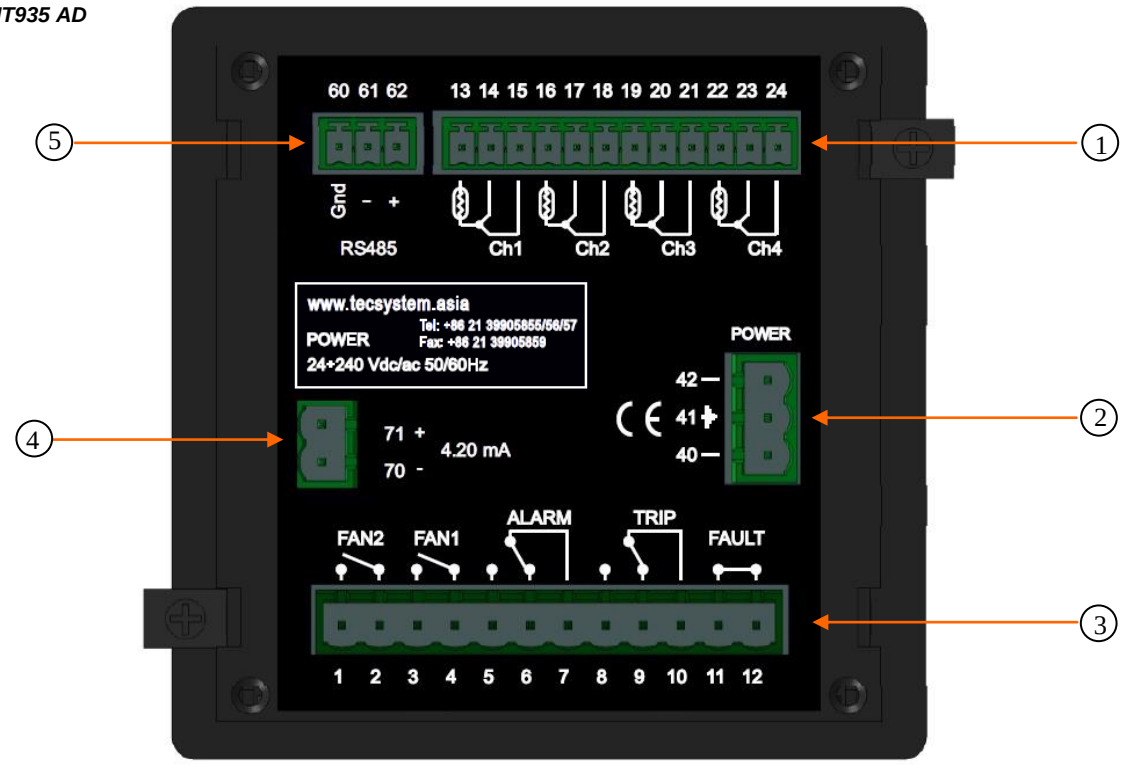

1)	Pt100 传感器（白色-红色-红色）	3)	继电器（FAN2-FAN1-警报-跳闸-故障）
2)	电源 24-240Vac-dc 50/60Hz	4)	输出 4.20 mA
5)	通信接口 RTU RS485 输出		

说明：继电器触点图像处于无警报状况，故障继电器打开异常：触点11-12打开（常开），触点11-12关闭（常闭）故障状况标识。请阅读第 13 页的警报和通风部分，查阅故障触点打开。

继电器连接示例

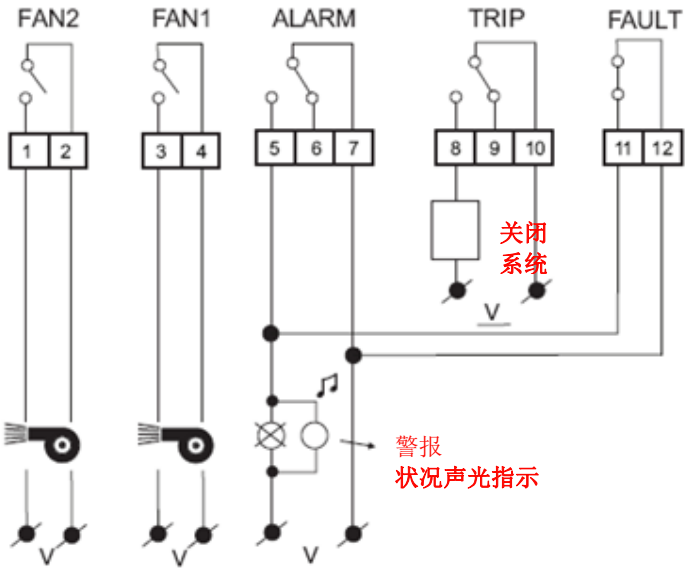

带10A-250Vac-res COSΦ=1触点的输出继电器

Pt100 连接示例

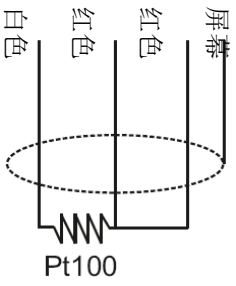

说明：连接传感器与控制装置前，请先阅读第15页的测量信号传输部分。

1MN0095 REV. 0

电源

NT935 控制装置使用通用电源，即可以通过 24-240 Vac-Vdc、50/60Hz 电源供电，直流电源不考虑极性（接线端子 40-42）。
这是由于使用了全新设计和制造且经过测试的电源装置，因此安装人员无需担心交流电源和直流电源是否正确。

装置由要保护的变压器二次电压直接供电时，电压过高可能导致装置被烧坏。
主开关关闭且变压器没有负载（空载测试）时，将出现这种情况。
如果 220 伏交流电压直接来自变压器二次母线，且固定电容蓄电池为变压器本身提供相电压，则上述问题会更加明显。

为了对控制装置提供线路过电压保护，我们建议您使用 TECSYSTEM 公司专为此用途设计的 PT-73- 220 放电装置。作为备选，我们建议使用 110 伏交流电压，或者使用 110 伏直流电压更好。

如果必须使用新的控制装置替代原来的控制装置，为了保证装置的正确和安全运行，必须使用随附的新接线端子更换连接传感器/继电器/电源的接线端子。

警报和通风

对可拆卸式接线端子进行电气连接前，必须先将接线端子从装置上断开。
控制装置处于以下其中一种模式时，不会监测温度，且所有继电器闭锁，故障继电器触点闭合且故障 LED 开始闪烁。

- Vis. 编程显示器
- PRG 编程
- 继电器测试

“警报”和“跳闸”继电器仅当超出设定的温度阈值时切换.
仅当设备通电时，如果装置在启动时没有检测到故障，“故障”触点打开(11-12)，且一直保持该状况，直到出现以下其中一种情况:

- 数据存储故障（Ech 消息）.
- Pt100 传感器故障（FCC 短路传感器、FOC 中断传感器或 Fcd 温度急增）
- CAL 测量电路损坏
- 电源电压不足
- 编程后上电复位(PRG)时，显示数据(VIS)和测试继电器

说明：请勿将“故障”继电器连接至变压器跳闸电路，以免系统意外中断。

故障触点工作

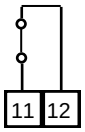

故障 11-12 常闭：警报故障或电源关闭

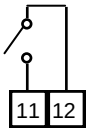

故障 11-12常开：电源打开或无故障

FAN1 和 FAN2 触点可以用于控制冷却风扇，或者可以插入变电室调节系统中，具体见第 17 页的风扇控制部分。
说明：对任何电气连接进行编程前，始终要先断开装置电源

故障和重置消息序列

在下文找到故障消息序列和“重置”功能状况

1) ECH	eeprom 故障	可擦除消息
2) CAL	测量电路故障	可擦除消息
3) FCD	温度急增故障	可重置状况
4) ERR PT	FOC 或 FCC 传感器故障	不可重置状况

编程

NT935 BASIC/AD

步骤	按键动作	作用	按键动作	说明
1	PRG SET	按住“PRG”键，直到显示器显示“PRG”		PRG
2	PRG SET	按“PRG”确认进入编程模式		
3		显示(CH 1-2-3)的“警报”阈值 设定目标阈值，警报 LED 闪烁。	▼ ▲	默认 90°C
4	PRG SET	显示(CH 1-2-3)的“跳闸”阈值 跳闸 LED 闪烁		
5		设定目标阈值	▼ ▲	默认 119°C
6	PRG SET	显示 FAN1 (CH 1-2-3)，Fan1 LED 闪烁。.		默认 YES
7		选择 YES / NO / INT	▼ ▲	如果选择 INT，请阅读第 18 页上的功能说明
8	PRG SET	显示(CH4) 启用 CH4		
9		设定 YES or NO	▼ ▲	设定为 YES 时，CH4 启用，设定为 NO 时，CH4
10	PRG SET	显示(CH4)的“警报”阈值，警报 LED 闪烁		如果 CH4=NO，前往步骤 16，默认为 NO
11		设定目标阈值	▼ ▲	默认 120°C
12	PRG SET	显示(CH4)的“跳闸”阈值，跳闸 LED 闪烁		
13		设定目标阈值	▼ ▲	默认 140°C
14	PRG SET	显示(CH4)的 FAN2		默认 Yes
15		选择 YES 或 NO	▼ ▲	
16	PRG SET	显示 ON(CH 1-2-3)，FAN1 LED 闪烁		默认 70°C
17		设定 FAN1 ON 的目标阈值	▼ ▲	如果选择 FAN1 NO，则前往步骤 21 如果选择 INT，则 FAN1 和 FAN2 LED 闪烁
18	PRG SET	显示 OFF(CH 1-2-3)，FAN1 LED 闪烁		默认 60°C
19		设定 FAN1 OFF 的目标阈值	▼ ▲	

20	PRG SET	显示 ON (CH4)，FAN2 LED 闪烁		默认 45°C
21		设定 FAN2 ON 的目标阈值		如果 FAN2=NO，前往步骤 24
22	PRG SET	显示 OFF(CH 4)，FAN2 LED 闪烁		默认 35°C
23		设定 FAN2 OFF 的目标阈值		
24	PRG SET	显示 HFN (NO)，FAN1-FAN2 LED 闪烁		每“n”小时风扇循环测试5分钟
25		设定目标小时数		默认 NO=功能禁用
26	PRG SET	显示 FCD (NO)		温度急增导致的故障（° C/秒）
27		设定目标值（见第 28 页的 FCD 信）		默认 NO（功能已排除）
28	PRG SET	显示 VOT (NO)（见第 17 页的冗余）		
29		设定 YES 或 NO		默认 NO（功能已排除）
		如果是 NT935 (BAS)版本，则跳至步骤 38		
30	PRG SET	显示 ADR <> “datum”		通信接口地址默认 001
31		设定地址		1 至 255
32	PRG SET	显示 BDR <> “datum”		通信接口传输速率默认为 19.2 Kb/s
33		设定目标速率		2.4 Kb/s 至 38.4 Kb/s
34	PRG SET	显示 PAR <> “datum”		奇偶校验位选择默认为 EVE
35		设定目标奇偶校验位		无(No)，偶数(EVE)，奇数(ODD)
36	PRG SET	显示 420 <> “datum”		4.20mA 输出编程
37		选择目标 4.20 mA 输出		1-2-3-4；固定通道 SCA：扫描 HOT：最高温通道/默认 HOT
38	PRG SET	显示 END		编程结束
39	ENT RESET	按“ENT”存储设定数据和退出编程		Err：LED 值编程错误（说明 6）
40	PRG SET	返回步骤 1		见第 16 页的编程说明

注意:

我们建议您在启动设备前先检查装置的编程.

TECSYSTEM设定的默认参数可能对您的要求不适合

对设备进行编程是最终用户的责任，必须根据安装控制装置的系统的具体应用和特征检查（由专业的工程师执行）本手册中所述的警报阈值的设定情况和功能的启用情况。

编程说明

1) “模式”键允许按照 28-26-8-1 的相反顺序进行编程。
2) “测试”键允许退出编程并且不保存修改的数据。
3) 键盘持续 1 分钟没有任何操作时，退出编程并且不保存数据。
4) 在编程过程中，控制装置不控制/保护被监测的机器。
5) 编程结束时，控制装置重新启动，且“故障”继电器禁用，直到装置完全重启。
6) 按“ENT”时，显示“Err”，意味着发生以下其中一种错误：
ERR ALL.= 警报 ≥ 跳闸
ERR FAN = 风扇关闭 ≥ 风扇打开。（FAN1 或 FAN2）
ERR INT = INT 风扇关闭≥ 风扇打开(FAN1) DELTA <10°C

按“PRG”返回步骤 1 并更正数据。

说明：每次对控制装置进行编程并确认保存数据时，最高温度中存储的值被重置为保存时的值。

温度传感器

每一个 Pt100 温度传感器都有一根白色线缆和两根红色线缆（CEI 75.8 标准）。

CH2 通道必须始终对应变压器中央绕组。
如果要使用 NT935 控制装置调节变电室的温度，CH4 通道必须始终对应变压器芯或 Pt100 环境传感器。

测量信号传输

传输 Pt100 测量信号的线缆在所有情况下都必须符合以下条件：

每一个 Pt100 都必须与三芯线缆连接，线缆的最小截面积为 0.35㎜²，最大截面积为 1 ㎜²。
1.延长电缆必须使用带 80%屏蔽罩的镀锡铜线编织屏蔽
2.导线必须为绞线，建议最大步长为 60㎜
3.电缆屏蔽层必须仅与终端接地，最好是在装置侧。
4.传感器信号传输电缆附近不得有任何低压或中高压电线。
5.Pt100 电缆和信号传输电缆必须按直线铺设，不得缠绕。
6.对接导体的任何盖帽必须正确压接，避免错误接触。

说明：为了正确安装传感器和信号传输电缆，请阅读 SCS/传感器安装规则手册。

不遵守安装规则可能导致的后果。
1）从其他电路的电线传递过来的电场与导体（尤其是无屏蔽层的电缆）进行电容耦合。这种耦合效果产生的信号与附近导体传输的信号叠合，导致读数不准确
2) 电线中的磁通量变化可以在信号传输电缆（尤其是非绞线电缆）上产生电动势，形成闭合电路，产生电流。干扰电流乘以电路电阻产生的电压值与被传输的信号叠合，干扰传感器的测量
3) 错误接触可以更改信号，导致检测到的温度发生变化。
在具体情况下，若未遵守Pt100传感器的连接规则，则SCS盒与温度控制装置之间会出现以下异常情况:
a) 温度读数不准确、警报或异常跳闸
b) Pt100 传感器出现机械/电气故障
c) 控制装置的 Pt100 输入被损坏

TECSYSTEM 公司设计了自己的特殊电缆以用于传输测量信号，不仅符合 CEI，也满足型号 CT-ES 的所有保护要求

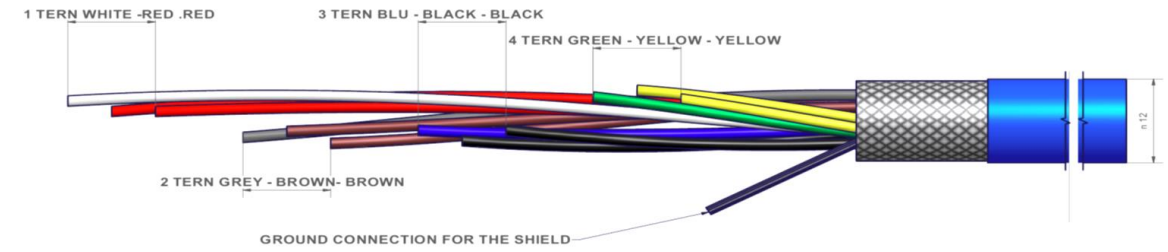

说明：使用不符合以上规则的电缆可能导致读数异常。始终须考虑的重要一点是，对信号线的任何干扰都有可能导致 Pt100 输入(CH1-CH2-CH3-CH4...)或传感器出现异常。

所有“NT”系列控制装置都使用线性传感器信号，最大错误容差为全量程值的1%

温度传感器诊断

如果出现故障或超出要保护的机器上安装的其中一个温度传感器的全量程值，则立即打开“故障”继电器，并且显示相应通道上的故障传感器相关警告(PT Err).

Fcc表示传感器短路或控制装置的最小全量程值超过-8°C (版本 0°÷240°C)和 -48°C (版本 -40°C÷200°C)

Foc表示传感器受到干扰或控制装置的最大全量程值超过243°C （版本 0°÷240°C) 和 203°C （版本 -40°C÷200°C)

要清除消息并重置“故障”触点打开，需检查Pt100连接并更换出现故障的传感器（如有）。如果已经达到最小/最大全量程值，则检查环境条件与控制装置的读数是否一致。

说明：传感器线路受到干扰也可能导致超出最小/最大全量程值，在这种情况下，我们建议您检查:

传感器和上述所有延长电缆是否正确安装（按照测量信号传输部分的说明）

激活：冗余（见下文）或FCD（见第28页）必须始终在考虑系统工作条件的情况下进行操作。

CAL消息显示：测量电路中发现损坏时，显示该消息。显示的温度值可能不正确。将控制装置返还给TECSYSTEM进行修理。

冗余功能

冗余功能源自于冗余的概念，是指在系统中重复使用零部件以增强**可靠性**.

冗余的作用原理？

基于冗余的原则，我们使用三相U-V-W上安装的传感器监测变压器的运行状况，同时确保传感器正常工作，区别任何故障警报（由于安装错误而产生）

激活冗余“YES”功能后，控制装置将比较受监测的CH1-CH2-CH3通道上记录的温度值，仅当同一时间段T内至少有两个通道超出跳闸阈值时，才启用跳闸触点切换。

选择冗余“NO”时，功能被禁用。

说明：设定冗余 “Yes”时，警报触点切换将指示超出每个通道的警报阈值。.

要启用冗余功能，请阅读第14-15页的编程部分。

注意：通过温度正确控制变压器，从而当变压器相间负载均衡分配时允许冗余功能。此外，两个或多个通道上出现任何故障状况：FCC-FCC-FCD，激活冗余后，都可以确定跳闸触点抑制。

编程数据诊断

如果内部存储故障或编程数据损坏，在打开后，立即显示相关故障触点的 Ech。
在这种情况下，为安全起见，会自动加载默认参数（见第 14-15 页的编程表）。按“重置”可清除 Ech，再运行编程以进入目标值。
最后关闭装置并返回以检查内存是否正常工作，如果被损坏，将再次显示 Ech（将控制装置寄给 TECSYSTEM 公司进行修理）。

温度诊断

其中一个温度传感器感应到温度高于警报阈值 1°C 时，5 秒钟后，**警报**继电器切换，相关通道(CH*n*)的*警报 LED* 亮起。
超出跳闸温度限值时，**跳闸**继电器切换，相关通道(CH*n*)的*跳闸* LED 亮起。
温度记录值恢复到等于或低于为**警报**和**跳闸**继电器切换设定的阈值后，这些继电器立即断电，相关 LED 熄灭。
警报和**跳闸**值保留在内存中：进入 Vis 模式可以调用这些值（编程参数显示）并在 PRG（编程）模式中进行修改。

冷却风扇控制

NT935控制装置配备两个FAN触点(FAN1和FAN2)，如果编程正确，可以控制风扇打开和关闭以冷却变压器。

FAN1和FAN2触点可以控制安装了该触点的变压器或变电室的冷却情况。

将FAN1切向连接到冷却系统（变压器上的两根母线）并且将FAN2连接到排气扇后，将加速变电室中的空气流动，此外也不再需要使用系统外部节温器控制变电室温度。

控制风扇有两种不同的方式:

- 使用三个柱栅上的传感器感应到的温度
  CHF 1.2.3
  (例如 70°C 时打开- 60°C 时关闭)

- 额外使用一个传感器（XH4/ΨEΣ）专用于变电室(ΦAN2)内的环境温度
  CHF 4
  (例如 45°C 时打开 - 35°C 时关闭)

打开和关闭值是根据设备范围进行编程的.

风扇测试

通过编程(HFn)可以使风扇每"*xxx*"小时运行5分钟，无论柱栅或环境温度值（即当HFn=001时，风扇每1小时运行5分钟）.
该功能是为了定期检查风扇运行情况及其控制装置。
设定为NO时，该功能被禁止.
要启用Hfn功能，请阅读第14-15页的编程部分.

智能风扇功能

用途：：

智能风扇功能可以部分预测（一次一根母线）切向通风系统的激活情况，从而减少变压器的热冲击。

减少变压器热冲击将延长变压器及通风系统的使用寿命.

启用**FAN 1 "INT"**功能后，控制装置将交替激活FAN1和FAN2触点（每个30分钟），预测通风系统在FAN1 ON和FAN1 OFF之间的临界值时激活.

例如FAN1 ON = 70° C和FAN1 OFF = 60° C **FAN INT.激活 = 65° C**

启用该功能前，请检查两个通风通道连接的分布情况，右侧通道连接至FAN2继电器，引脚1-2，左侧通道连接至FAN1，引脚3-4.

选择 **FAN1 "NO 或 YES**"时，功能被禁用

说明：一旦超出FAN1阈值，控制装置将激活两个通道。要启用 *智能风扇*功能，请阅读第14-15页的编程部分.

说明：为了使智能风扇功能正确运行，我们建议您观察 FAN1 ON 和 FAN1 OFF 之间的 ΔT 10°C。连接 VRT 系列设备时当 Intellifan 启用时，必须连接 FAN1 - COM-EN1 和 FAN2 - COM-EN2.



重要警告

对安装了控制装置的配电板进行绝缘测试前，将它和传感器从电源上断开，防止它遭到严重损坏。

RS485 通信接口输出

(仅适用于NT935 AD)

模块内通信接口简介

通信接口内部扩展模块内嵌于监测装置中，允许使用MODBUS RTU协议通过RS485网络传输数据。

运行说明

为了使模块正确运行，须设定 RS485 网络的设置参数：地址、波特率、奇偶校验位。见第 14 页编程步骤 30-35。
仅当 NT935 AD 处于其中一种预期模式（扫描、自动、手动和最高温度）中的温度控制模式时，才会激活温度控制监测装置的串行通信。
激活其他功能时（例如编程、编程显示和继电器测试），通信接口通信暂时禁用。

通信接口网络数据传输

内部模块中的通信接口允许将 NT935 控制装置连接至使用通信接口 RTU 协议的 RS485 网络，以读取第 21 页通信接口表中所示的数据，并将这些数据写入远程编程说明中；模块始终处于从属模式。
NT935 AD 控制装置仅在温度读取模式下才会与网络通信，在以下模式下不活动：显示、编程和继电器测试。

RS485 电气连接

使用信号电缆是为了确保网络正常运行，因此我们建议您按照 EIA RS485 标准中的规定使用 24AWG 双绞线。
连接 RS485 中的装置的双绞线可能需要在最后一个串行装置上使用一个 120 欧姆的端接电阻器。
连接双绞线时注意极性，铺设网络时避免剧烈弯曲或绕圈，以免修改线路阻抗。必要时，也可使用用于接地的接地终端。
RS485 双绞线的位置应始终远离电源线。

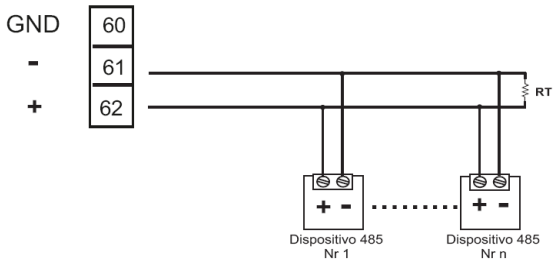

1MN0095 REV.

数据帧

异步传输的数据帧包括：1 个起始位，8 个数据位，1 个奇偶校验位（如果设定了极性，则为偶数或奇数）和 1 个停止位。
允许的波特率为：2400、4800、9600、19200和38400。若未另行说明，则字长（数据）为16位。

数据包

一个完整的请求/响应序列包括:

主请求:
从地址 - 1 字节
功能代码 - 1 字节
数据 - 变量，取决于功能代码
CRC - 2 字节

从响应:
从地址 - 1 字节
功能代码 - 1 字节
数据 - 变量，取决于功能代码
CRC - 2 字节

功能代码

通信接口模块支持以下功能代码:

3(10): -保持寄存器读数
16(10): -寄存器连续写入

如果通信接口收到消息且检测到 CRC 错误，则不提供响应。

代码 3(10).

请求:
从地址，代码3(10)，起始地址HI，起始地址LO，点数HI，点数LO，Crc LO，Crc HI

响应:
从地址，代码 3(10)，字节数，数据 HI，数据 LO……，Crc LO，Crc HI。

代码 16(10).

请求：
从地址，代码16(10)，起始地址HI，起始地址LO，点数HI，点数LO，字节数，数据HI，数据LO……，Crc LO，Crc HI。

响应:
从地址，代码16(10)，起始地址HI，起始地址LO，寄存器数HI，寄存器数LO，Crc LO，Crc HI.

远程编程说明

可写入寄存器在通信接口映射表中显示为W或RW（写入或读取/写入），寄存器最大数量为72个，见第20页表格

通道1÷3未禁用；如果设定错误，则始终强制设为启用通道。
如果通道4未启用和/或未提供信息，则提供以下响应:

1. 测量温度 = 0000 (0°C)
2. 温度警报/跳闸 = E2PROM中写入的值
3. 通道状态 = 0000
4. 通道设定 = %00000000; %xxxxxxx0 (x=n.d.)

如果信息未发送至 4.20mA 输出=Ch 4，且已禁用，则强制设为模式“HOT”；同样的策略适用于通过模板进行编程。

如果写入信息发送至仅读取寄存器，则数据将被丢弃，不影响接收的消息。“继电器状态”信息指示继电器线圈的励磁状态.

写入命令结束时，检查数据兼容性:

1. **如果不兼容，响应为“异常”，且数据包被全部拒绝。读取“接收的数据错误”寄存器可以请求第一个错误数据的代码。（说明：在重置、打开或在E2PROM中写入数据时代码丢失）；**
2. **如果数据正确，则会传输至非易失性存储器(E2PROM)，历史数据被取消(Tmax=0° C)，再强制系统重置。**
3. **如果写入命令仅需要写入“命令”，将自主执行，并且不进行重置，即不会影响控制装置数据。**

通过通信接口进行远程编程时，还须考虑警报阈值必须低于跳闸阈值，且风扇打开阈值必须高于风扇关闭阈值

如果试图设定错误的阈值，则 NT935 监测装置不会继续进行编程和数据存储；因此在以下读数中，您将读取到与之前的编程有关的数据。

发送写入请求后，监测装置将要求约 1”在 eeprom 中存储数据；在存储阶段，通信接口模块无法继续处理其他请求。
如果编程请求成功，则控制装置将自动重置和加载最新设定的值。

错误代码（异常代码）

出现错误请求时，通信接口将根据以下情况响应修订后的代码和汇集的错误:

1: -功能代码不受支持
2: -数据地址错误
3: -数据错误（实例长度）

包含HFN数据的存储器区域不得进行强制。

所有风扇关闭时（F1，F2），不会进行继电器测试。

不允许数据

某些编程不允许，因为 NT935 AD 未提供这些编程；这些数据将被丢弃，不提供异常代码。

CH 1-2-3: → 无法禁用通道
CH 1-2-3: → 无法启用 FAN_2
CH 4: → 无法启用 FAN_1
CH 4: → 无法启用 FAN_INT
CH 4: → CH 4=no 时，无法启用 FAN_2

非法数据

另一方面，一些组合为编程错误，因为是错误的设置，在这种情况下，错误代码为ILLEGAL_DATA。通信接口读取寄存器7可访问该信息。

无错误	无错误00
CH_1 跳闸≤警报	代码错误01
CH_4 跳闸≤警报	代码错误04
FAN_1 开≤关 0 FAN INT ≤ 10	代码错误017
FAN_2 开≤关	代码错误018
值 HFN >最大 见表格：系统 - 设定和状态	代码错误020
值 FCD >最大 见表格：系统 - 设定和状态	代码错误021
值 4.20 >最大 见表格：系统 - 设定和状态	代码错误022
值冗余 >最大 见表格：系统 - 设定和状态	代码错误023

一般装置说明

装置型号可以配备不同选项；为了避免中断生产，其存在按照Fw指示的电源确定，在显示器LED上指示消息。.

通过读取通信接口寄存器6（选项）可以访问该信息，含义如下:
LOW 字节
Bit_0 = AD: 4.20mA + Modbus RS485
HIGH 字节
Bit_0/1 = 00 – 范围 0°C - 240°C
Bit_0/1 = 10 – 范围 -40°C ÷ +200°C

如果以太网选项通信接口和4.20mA模式在显示器上不活动。可从日志中读取.

说明：如果从通信接口编程的值超出范围，将生成对应该日期的"异常"错误。

轮询频率

我们建议采用轮询频率等于或大于1秒。
轮询过于频繁可能使系统负荷过重，不会带来任何好处。 在多个设备 RS485 线中，按顺序进行查询，可能有助于在轮询之间进行延迟：连接设备的数量、通信速度和读取寄存器的数量。

通信接口映射表

消息头（信息和命令）*:*

地址 LO (10)	数据 HI	数据 LO	R：读取 W：写入 RW：读取/写入
1	Modello – MSD (ASCII)	Modello - 3° Digit (ASCII)	R
2	Modello - 2° Digit (ASCII)	Modello – LSD (ASCII)	R
3	间接(20H)	版本 Fw – MSD(ASCII)	R
4	版本 Fw - 2° Digit (ASCII)	版本 Fw – LSD(ASCII)	R
5	通道数(2*ASCII)		R
6	选项（见说明）	选项（见说明）	R
7	00	接收的错误数据	R-见表格.
8	00	信息不同原因	R-见表格
9	00	命令	W-见表格.

SYSTEM: Setting and Status

地址 LO (10)	数据 HI	数据 LO	说明 1	说明 2	R：读取 W：写入 RW：读取/写入
10	00	HFN (风扇测试)	0=无测试	1÷200h	RW
11	00	FCD	温度增量	0=No FCD 1÷30°/秒	RW
12	00	冗余	0=无冗余 1=YES		RW
13	00	CPU 设定	见说明		RW
14	00	CPU 错误	见说明		R
15	00	继电器状态	见说明		R
16	00	420 mA 通道	4.20 mA 参考通道	0=hot 1÷4= ch1÷4 5=scan	RW

17	00	地址	通信接口地址	1÷255	R
18	00	波特率	通信接口波特率	0=2400 1=4800 2=9600 3=19200 4=38400	R
19	00	奇偶性	通信接口奇偶校验位	0=无 1=偶数 2=奇数	R
20	00	随机	见说明		R

温度风扇:

地址 LO (10)	数据 HI	数据 LO	说明 1	说明 2	R：读取 W：写入 RW：读取/写入
21	2'compl. sign	Fan_1 ON	1°C ÷ 240°C 1°C ÷ 200°C (*)		RW
22	2'compl. sign	Fan_1 OFF	1° to÷ 240° 1°C ÷ 200°C (*)		RW
23	2'compl. sign	Fan_2 ON	1° to÷ 240° 1°C ÷ 200°C (*)		RW
24	2'compl. sign	Fan_2 OFF	1° to÷ 240° 1°C ÷ 200°C(*)		RW

(*)适用于版本 –40°C ÷ +200°C

TEMPERATURES channels 1÷4:

地址 LO (10)	数据 HI	数据 LO	说明 1	说明 2	R：读取 W：写入 RW：读取/写入
25	2'compl. sign	2'compl. Ch1 temper.	–10°C ÷ 240°C –48°C÷200°C (*)		R
26	2'compl. sign	2'compl. Ch1 max temperat.	0°C ÷ 240°C 0°C÷200°C (*)		R
27	2'compl. sign	2'compl. Ch1 temper. alarm set point	1°C ÷ 240°C 1°C÷200°C (*)	(AL)	RW
28	2'compl. sign	2'compl. Ch1 temper. trip set point	1°C ÷ 240°C 1°C÷200°C (*)	(TRP)	RW
29	2'compl. sign	2'compl. Ch2 temper.	–10°C ÷ 240°C –48°C÷200°C (*)		R
30	2'compl. sign	2'compl. Ch2 max temperat.	0°C÷ 240°C 0°C÷200°C (*)		R
31	2'compl. sign	2'compl. Ch2 temper. alarm set point	1°C ÷ 240°C 1°C÷200°C (*)	As (AL)	R
32	2'compl. sign	2'compl. Ch2 temper. trip set point	1°C ÷ 240°C 1°C÷200°C (*)	As (TRP)	R
33	2'compl. sign	2'compl. Ch3 temper.	–10°C ÷ 240°C –48°C÷200°C (*)		R
34	2'compl. sign	2'compl. Ch3 max temperat.	0°C ÷ 240°C 0°C÷200°C (*)		R

35	2’compl. sign	2’compl. Ch3 temper. alarm set point	1°C ÷ 240°C 1°C÷200°C (*)	As (AL)	R
36	2’compl. sign	2’compl. Ch3 temper. trip set point	1°C ÷ 240°C 1°C÷200°C (*)	As (TRP)	R
37	2’compl. sign	2’compl. Ch4 temper.	–10°C ÷ 240°C –48°C÷200°C(*)		R
38	2’compl. sign	2’compl. Ch4 max temperat.	0°C ÷ 240°C 0°C÷200°C (*)		R
39	2’compl. sign	2’compl. Ch4 temper. alarm set point	1°C ÷ 240°C 1°C÷200°C (*)		RW
40	2’compl. sign	2’compl. Ch4 temper. trip set point	1°C ÷ 240°C 1°C÷200°C (*)		RW
41	00	00			R
42	00	00			R
43	00	00			R
44	00	00			R
45	00	00			R
46	00	00			R
47	00	00			R
48	00	00			R
49	00	00			R
50	00	00			R
51	00	00			R
52	00	00			R
53	00	00			R
54	00	00			R
55	00	00			R
56	00	00			R

(*)适用于版本 –40°C ÷ +200°C

通道 1÷4: 设置

地址 LO (10)	数据 HI	数据 LO	说明 1	说明 2	R：读取 W：写入 RW：读取/写入
57	00	Ch1 设定	见说明 CHx		RW
58	00	Ch2 设定	见说明 CHx		RW
59	00	Ch3 设定	见说明 CHx		RW
60	00	Ch4 设定	见说明 CHx		RW
61	00	00	--		R
62	00	00	--		R
63	00	00	--		R
64	00	00	--		R

通道1÷4：状态

地址 LO (10)	数据 HI	数据 LO	说明 1	说明 2	R：读取 W：写入 RW：读取/写入
65	Ch1 事件	Ch1 状态	见说明 CHx		R
66	Ch2 事件	Ch2 状态	见说明 CHx		R
67	Ch3 事件	Ch3 状态	见说明 CHx		R
68	Ch4 事件	Ch4 状态	见说明 CHx		R
69	00	00	--		R
70	00	00	--		R
71	00	00	--		R
72	00	00	--		R

信息不同原因（读取）

BIT 7	BIT 6	BIT 5	BIT 4	BIT 3	BIT 2	BIT 1	BIT 0
--	--	--	-	-	-	-	*(*)已经重置(R)*

命令（写入）

BIT 7	BIT 6	BIT 5	BIT 4	BIT 3	BIT 2	BIT 1	BIT 0
--	--	--	-	-	*(*)重置 CPU_错误*	*(*) 重置历史数据*	*(*)零。BIT:已重置*

CHn 设定

BIT 7	BIT 6	BIT 5	BIT 4	BIT 3	BIT 2	BIT 1	BIT 0
--	--	--	--	FAN_INT	FAN2	FAN1	CAN_启用

CHn 状态

BIT 7	BIT 6	BIT 5	BIT 4	BIT 3	BIT 2	BIT 1	BIT 0
--	跳闸	警报	FAN_2	FAN_1	FCD	FOC	FCC

CHn 事件

BIT 7	BIT 6	BIT 5	BIT 4	BIT 3	BIT 2	BIT 1	BIT 0
--	跳闸	警报	--	--	--	FOC	FCC

继电器状态（线圈通电状态）

BIT 7	BIT 6	BIT 5	BIT 4	BIT 3	BIT 2	BIT 1	BIT 0
--	--	--	故障 继电器 1=无故障	跳闸 继电器 1=打开	警报 继电器 1=打开	FAN_2 继电器 1=打开	FAN_1 继电器 1=打开

CPU 错误

BIT 7	BIT 6	BIT 5	BIT 4	BIT 3	BIT 2	BIT 1	BIT 0
--	--	--	--	PT 错误	CAL	FCD 故障	ECH

CPU 设定

BIT 7	BIT 6	BIT 5	BIT 4	BIT 3	BIT 2	BIT 1	BIT 0
--	--	--	--	--	--	--	--

输出 4.20mA

仅适用于NT935 AD

可以将显示或采集装置连接至4.20mA输出.
每个输出允许的负载阻抗为0-500欧姆.
线圈进行光隔离以保证最大程度地抗干扰

4-20mA信号对应0-240 ℃范围，准确性为全量程值的1%
输出可在以下模式下进行编程:

1-2-3-4: 4.20mA输出对应已经设定的固定通道.
扫描: 4.20mA输出每2秒钟自动扫描活动的通道（默认设置）
HOT: 4.20mA输出自动对应活动通道中温度最高的通道

见第14页表中的步骤36-37。

说明：如果在CH4上对4.20mA输出进行编程，且被禁用，控制装置将自动设置HOT。电流温度比根据设备的温度范围而异
范围为0 ℃至+ 240 ℃时，比值为： Iout= (T/15)+4（T=温度，℃）
范围为–40 ℃至+ 200 ℃时，比值为：Iout= (T/15)+6.7（T=温度，℃）

例如：范围0 ℃ 至 240 ℃：

T=100°C 时 I_{out}= 100/15+4= 10.67 mA (±0.2 mA)

说明：我们建议您使用带屏蔽层的绞线；将双绞线按正确极性进行连接，铺设网络时避免弯曲或线圈绕组。双绞线的位置应始终远离电源线。

Pt100 延长电缆技术规格

1. 电缆 20 x AWG 20/19 铜/锡
2. 截面积 0.55 ㎜²
3. 阻燃绝缘层 PVC105
4. CEI 20.35 IEC 332.1 标准
5. 最高工作温度：90° C
6. 构造：4 组三绞线和带颜色的导体
7. 铜/锡屏蔽层
8. 阻燃 PVC 外层套
9. 外径 12㎜
10. 100m 线圈标准构造

FCD 功能

NT 系列设备结合了创新控制功能和 Pt100 传感器的动态状态。

激活 FCD 时，控制装置分析温度上升情况ΔT (*)并以秒为单位进行记录（**°C/秒**）。

启用该功能后，用户可以从最低值1°C/秒和最高值30°C/秒之中选择一个值(ΔT) 。如果感应到的值高于用户设定的值，则控制装置抑制激活“警报”和“跳闸”警报和切换“故障”继电器(11-12)，显示消息“**Fcd故障**”。

例如：我们将该功能设定为 5°C，仅当控制装置感应到被监测系统上的ΔT 在一秒钟内增加超过 5℃时，才会切换 FCD 故障。

设定为“no”以禁用 FCD 功能。

当通道为 FCD“故障”时，在这个通道上禁止相关的报警和跳闸警告;因此，这里只强调超快的温度升高现象。

按“重置”以删除所有通道上的FCD警告并重置“故障”继电器

FCD的可能应用

识别 Pt100 传感器线路上可能产生的干扰
如果未遵守安装说明（见第 15 页），则 Pt100 传感器线路上的任何干扰都有可能导致读数错误或异常警报。

在 1°C 至 10°C 之间设定 FCD 功能时（建议 5°C），可以抑制错误读数造成的结果，阻止激活警报继电器，如上所示。
纠正措施：检查传感器延长电缆的安装是否遵照第15页测量信号传输部分的具体说明。

识别传感器故障或故障连接
如果连接或传感器故障，可能会使温度快速上升或降低，导致系统跳闸或触发被监测系统的警报。

在这种情况下，我们建议 FCD 功能设置在温度范围 10℃至 20℃之间。

纠正措施：检查传感器连接的接线端子已拧紧，必要时更换出现故障的传感器。

识别电机转子堵塞

控制电机温度时，转子堵塞可能导致温度急增。
在这种具体情况下，我们建议在 20°C 至 30°C 之间设定 FCD 功能。建议设定为该值是为了防止在电机起动时或 ΔT/sec.快速变化时激活 FCD 功能。

(*)ΔT 值显示每一秒的温度范围。
说明：冗余被激活时不得启用 FCD 功能。

保修条件

您购买的产品受制造商或卖方保修条款和条件的保护，具体见 www.tecsystem.asia和/或购买协议中提供的“Tecsystem公司一般销售条件”。
仅当产品损坏是由于 TECSYSTEM 导致而成时（例如制造工艺或零部件缺陷），保修方才有效。
如果证实产品被篡改/修改、连接错误、电压超出限值、未遵守装配和使用技术数据（如本说明手册中所述），则保修无效。

故障排除	原因和解决办法
控制装置无法打开，但接线端子 40-42 的电源正确。	检查：连接器正确插入外壳中，线缆拧紧，连接器上没有烧伤的迹象。断开电源，进行如上检查并重新连接。
CH4 出现由于 FOC 导致的故障 （仅连接 3 个 Pt100 传感器）	CH4 / YES 控制装置编程错误。*按照第 14-15 页检查和重复编程，选择 CH4 / NO。.*
三/四个通道的其中一个通道出现由于 FOC/FCC 导致的故障	检查 Pt100 传感器的连接，检查*第 16-17 页的测量信号传输和温度传感器诊断部分的说明。*
打开时，显示器显示“ECH”	强烈干扰损坏了存储的数据。见第 16 页的编程数据诊断部分。
PT100 传感器全部处于 FCC	传感器连接不正确、插入接线端子时上面朝下。*检查连接线和接线端子。*
一个或多个通道显示的温度错误。	联系 *TECSYSTEM 技术部。*
主开关突然跳闸。温度处于标准水平。仅一个通道引起跳闸。	检查 T-MAX 中记录的温度，检查*第 16 页测量信号传输和温度传感器诊断部分的说明。激活 FCD 功能。*
FCD 警告	见第 28 页的 FCD 功能。
如果问题仍然存在，请联系 TECSYSTEM 技术部。	

设备处置

设备已通过欧洲指令 2012/19/EC (WEEE)和 2011/65/EC (RoHS)认证，以减少电气和电子废物，提倡回收使用该设备的材料和零部件，减少电气和电子材料残余物和有害零部件的处置。



2005年8月13日以后供应的所有电气和电子设备均带有遵循关于电气和电子废物(WEEE)的欧洲指令2002/96/EEC的符号标志。带有该符号标志的所有电气或电子设备均须与普通的生活垃圾分开处置

返回使用过的电气设备：联系TECSYSTEM或您的TECSYSTEM代理了解有关正确处置设备的信息。TECSYSTEM 了解其产品的环境影响，因此要求客户积极支持对其设备进行正确和环保的处置。

有用联系人

技术信息: campisi@tecsystem.asia

销售信息: georgeyang@tecsystem.asia
miawang@tecsystem.asia

UL 规格和额定值

电缆规格	主电路18AWG的尺寸，工作温度超过105° C
设备重量	0.45 Kg
输入电源	24 – 240 Vac / Vdc (±10%), 50/60 Hz, 7,5VA最大值
保护	外部开关或电路断路器
输出继电器	5 个继电器输出: 10A 250Vac-res COS=1
可选端口(AD)	RS485 + 4.20mA
如果背部面板提供 2 个拧紧扭矩为 0.57Nm 的短固定螺钉，则适合用于类型 1 外壳的平整表面上。	